LR-81A-0

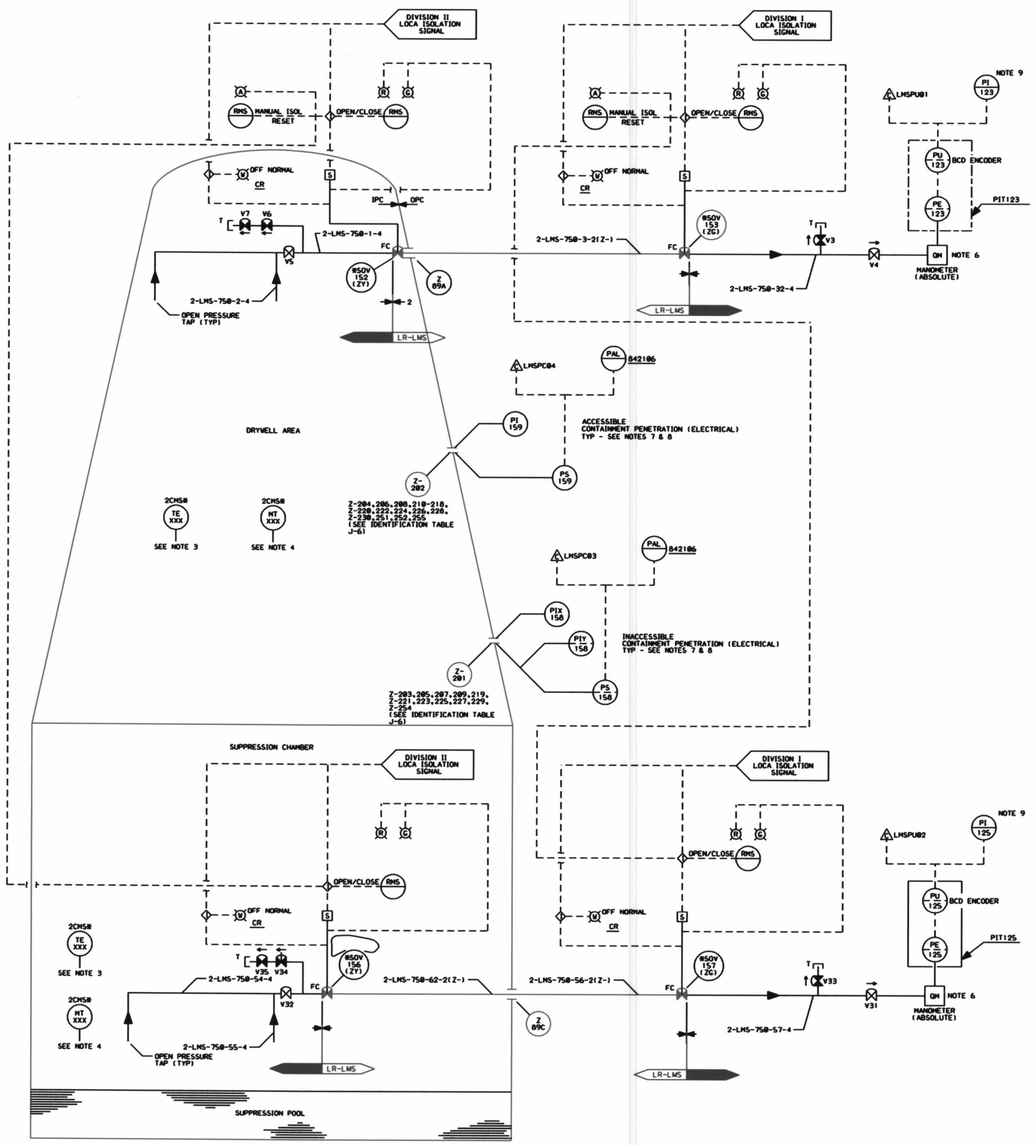

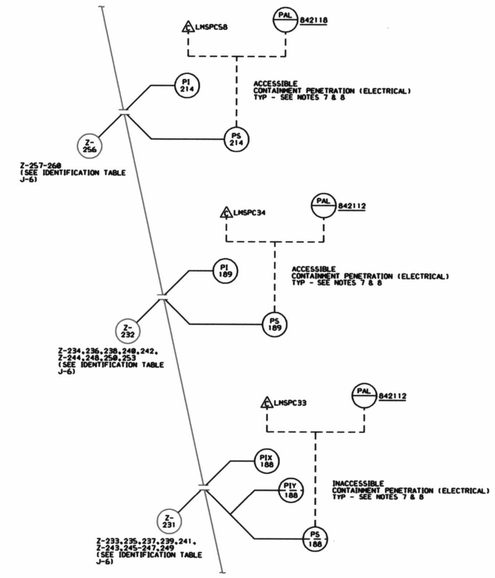

MARK NUMBER	VALVE DESCRIPTION	SIZE	NO. OF VALVES
SOV152,153,156, SOV157	VOS150-WB-2Q	3/4"	4
V3;4,5,6;7 V31,32,33 V34,35	VS5060-C-4	3/4"	10

CONTAINMENT PENETRATION IDENTIFICATION TABLE

CONT. PEN NO.	PS	PI	PIX	PIY	CONT. PEN NO.	PS	PI	PIX	PIY
Z-201	158	—	158	158	Z-231	188	—	188	188
Z-202	159	159	—	—	Z-232	189	189	—	—
Z-203	160	—	160	160	Z-233	190	—	190	190
Z-204	161	161	—	—	Z-234	191	191	—	—
Z-205	162	—	162	162	Z-235	192	—	192	192
Z-206	163	163	—	—	Z-236	193	193	—	—
Z-207	164	—	164	164	Z-237	194	—	194	194
Z-208	165	165	—	—	Z-238	195	195	—	—
Z-209	166	—	166	166	Z-239	196	—	196	196
Z-210	167	167	—	—	Z-240	197	197	—	—
Z-211	168	168	—	—	Z-241	198	—	198	198
Z-212	169	169	—	—	Z-242	199	199	—	—
Z-213	170	170	—	—	Z-243	201	—	201	201
Z-214	171	171	—	—	Z-244	202	202	—	—
Z-215	172	172	—	—	Z-245	203	—	203	203
Z-216	173	173	—	—	Z-246	204	—	204	204
Z-217	174	174	—	—	Z-247	205	—	205	205
Z-218	175	175	—	—	Z-248	206	206	—	—
Z-219	176	—	176	176	Z-249	207	—	207	207
Z-220	177	177	—	—	Z-250	208	208	—	—
Z-221	178	—	178	178	Z-251	209	209	—	—
Z-222	179	179	—	—	Z-252	210	210	—	—
Z-223	180	—	180	180	Z-253	211	211	—	—
Z-224	181	181	—	—	Z-254	212	—	212	212
Z-225	182	—	182	182	Z-255	213	213	—	—
Z-226	183	183	—	—	Z-256	214	214	—	—
Z-227	184	—	184	184	Z-257	215	215	—	—
Z-228	185	185	—	—	Z-258	216	216	—	—
Z-229	186	—	186	186	Z-259	217	217	—	—
Z-230	187	187	—	—	Z-260	218	218	—	—

NOTES:

1. ALL INSTRUMENT & EQUIPMENT NUMBERS TO BE PREFIXED WITH "LMS-" EXCEPT WHERE A DIFFERENT PREFIX IS SHOWN. AN ASTERISK (*) WILL REPLACE THE DASH (-) IN THE PREFIX FOR INSTRUMENTS OR EQUIPMENT WHICH IS PART OF NUCLEAR SAFETY FEATURES SYSTEM.
2. ALL TEST CONNECTIONS OR PRESSURE CONNECTIONS SHALL BE 3/4" UNLESS OTHERWISE NOTED.
3. TEMPERATURE ELEMENTS (TE'S) ARE SHOWN ON PID-82 A&B CONTAINMENT ATMOSPHERE MONITORING SYSTEM.
4. HUMIDITY ANALYZERS (HT'S) ARE SHOWN ON PID-82 A&B CONTAINMENT ATMOSPHERE MONITORING SYSTEM.
5. ALL PIPING TO BE CLASS 153 UNLESS OTHERWISE NOTED.
6. TO PROTECT THESE DEVICES FROM DAMAGE, THE QUARTZ MANOMETERS WILL BE ISOLATED, DISCONNECTED AND STORED WHEN NOT IN USE. PIT 124 (AN ABSOLUTE MANOMETER) IS A PURCHASED BUT NOT INSTALLED SPARE.
7. SEE ACCOMPANYING TABLE FOR LISTING OF CONTAINMENT PENETRATIONS (ELECTRICAL) AND CORRESPONDING PI & PS NO'S.
8. ELECTRICAL PENETRATION ASSEMBLY PI'S & PS'S TO BE SUPPLIED BY PENETRATION ASSEMBLY VENDOR.
9. DIGITAL INDICATOR.

THIS DRAWING WAS PRODUCED ELECTRONICALLY. DO NOT MAKE ANY CHANGES MANUALLY.

LR NOTE:
PLEASE REFER TO DRAWING LR-000 SHEETS 2A THROUGH 2F
FOR LR BOUNDARY DRAWING NOTES, SYMBOLS, AND ACRONYMS.

SAFETY RELATED
QUALITY RELATED
NON-SAFETY RELATED

(REF. SAR FIG. 6.2-73a & ISPT-81A)

Constellation Energy Group

NINE MILE POINT
NUCLEAR STATION
UNIT 2 - SCRIBA, N.Y.

PIPING & INSTRUMENTATION DIAGRAM
CONTAINMENT LEAKAGE
MONITORING SYSTEM

SCALE NONE | DRAWING NO LR-81A-0

NF	REV	DATE	DESCRIPTION OF REVISION	M.O.	DFT	DES	CHKD	ENG	ELEC	MECH	STR	NF	REV	DATE	DESCRIPTION OF REVISION	M.O.	DFT	DES	CHKD	ENG	ELEC	MECH	STR	NF	REV	DATE	DESCRIPTION OF REVISION	M.O.	DFT	DES	CHKD	ENG	ELEC	MECH	STR

...\LR-081_a.dgn 5/14/2004 2:37:15 PM

D 212