LR-52H-0
ON SHEARED

MARK NUMBER	VALVE DESCRIPTION	SIZE	NO. OF VALVES
V5, 6, 7, 8 V9, 10, 11, 12	BY MFG	1/4"	8
V23	VGW015-Q-4K	8	1
V26, 27	BY MFG	1/4"	2
850V236	V05150-WB-2Q	3/4"	1
V38	V05080-D-4	3/4"	1
V37	BY MFG	1"	1

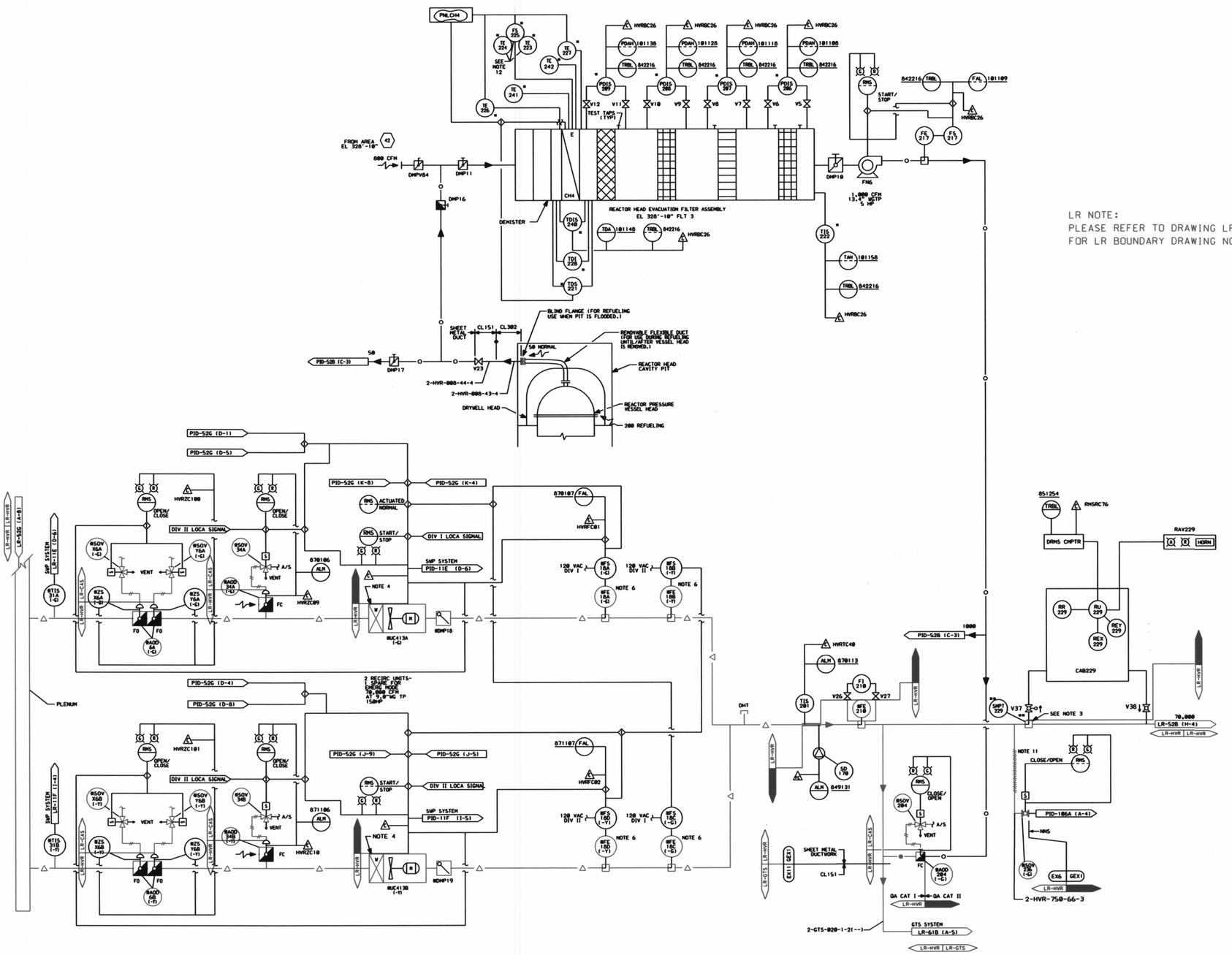

LR NOTE:
PLEASE REFER TO DRAWING LR-000 SHEETS 2A THROUGH 2F
FOR LR BOUNDARY DRAWING NOTES, SYMBOLS, AND ACRONYMS.

LINE LEGEND

- AIR SUPPLY (QA CAT II EXCEPT AS NOTED)
- AREA EXHAUST (QA CAT II)
- AREA EXHAUST/RETURN (QA CAT I)
- RECIRCULATED AIR (QA CAT I)

NOTES.

1. ALL INSTRUMENT & EQUIPMENT NUMBERS TO BE PREFIXED WITH"2HVR-" EXCEPT WHERE A DIFFERENT PREFIX IS SHOWN. AN ASTERISK (*) WILL REPLACE THE DASH IN THE PREFIX FOR EQUIPMENT OR INSTRUMENTS WHICH ARE A PART OF NUCLEAR SAFETY FEATURE SYSTEMS.
2. ALL AIR QUANTITIES ARE IN CUBIC FEET PER MINUTE (CFM).
3. CONTINUOUS AIRBORNE MONITOR (CAM) CONNECTION WITH FIXED ISOKINETIC PROBE.
4. FOR PIPING TO 8UC413A, B SEE PID-11E AND PID-11F.
5. UNIT COOLER DRAIN IS SHOWN ON PID-52C.
6. FURNISHED UNDER SPEC C071A AS COMPONENTS OF FLOW SWITCHES.
7. THE SYMBOL (*) DENOTES SUPPLIED BY FILTER VENDOR.
8. THE SYMBOL (**) DENOTES SUPPLIED BY DIGITAL RADIATION MONITOR VENDOR.
9. SMAT OFF DAMPERS, FIRE DAMPERS (QA CAT II), FLEXIBLE DUCTS, FLOW ELEMENTS AND VOLUME DAMPERS SHALL BE FURNISHED AND INSTALLED BY SHEET METAL CONTRACTOR.
10. FLOW INDICATORS AND ASSOCIATED VALVES SHALL BE FURNISHED BY SHEET METAL CONTRACTOR AND INSTALLED BY INSTRUMENT CONTRACTOR.
11. 3/4" FLEXIBLE HOSE TO BE FURNISHED UNDER SPEC C071V.
12. FURNISHED UNDER SPEC P243U AS COMPONENTS INSIDE CH4 PANEL.

THIS DRAWING WAS PRODUCED ELECTRONICALLY. DO NOT MAKE ANY CHANGES MANUALLY.

SAFETY RELATED
QUALITY RELATED
NON-SAFETY RELATED
RX BUILDING VENTILATION
AND CAT I AREA COOLERS

Constellation Energy Group
NINE MILE POINT NUCLEAR STATION
UNIT 2 - SCRIBA, N.Y.

PIPING & INSTRUMENTATION DIAGRAM
RX BUILDING VENTILATION
& CAT I AREA COOLERS

SCALE NONE | DRAWING NO LR-52H-0

MF	REV	DATE	DESCRIPTION OF REVISION	M.O.	DFT	DES	CHKD	ENG	ELEC	MECH	STR

...\LR-052_h.dgn 5/14/2004 1:48:26 PM

188