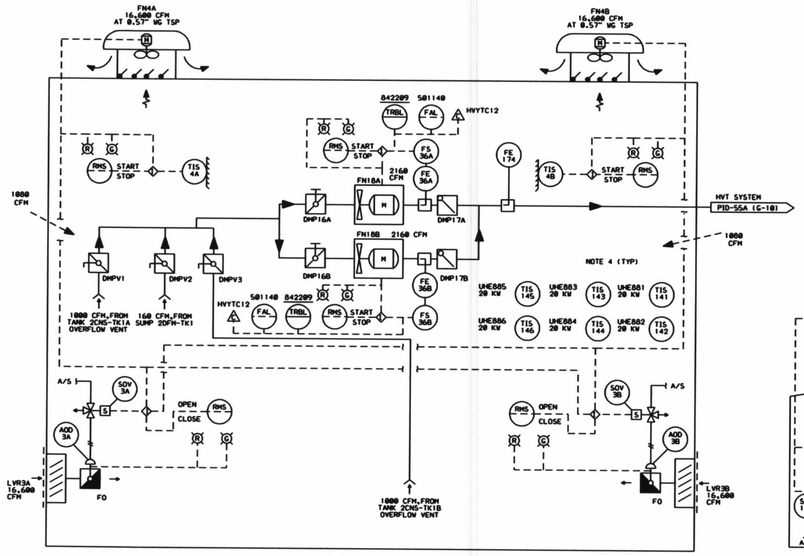

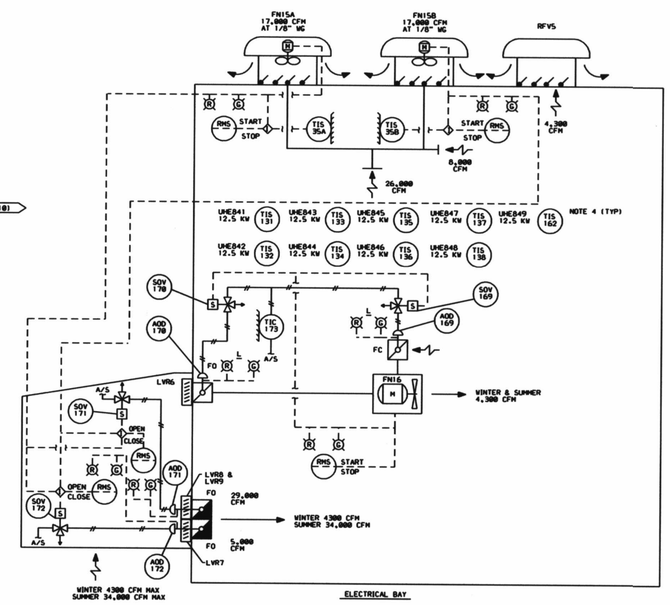

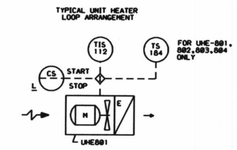

ASSOCIATED EQUIPMENT
MARK NO'S

AREA	UHE	TIS	TS
DEMIN.WTR. STG.TNK.BLDG.	801 802 803 804	112 113 114 115	184 185 186 187
ELECTRICAL BAY	841 842 843 844 845 846 847 848 849	131 132 133 134 135 136 137 138 162	
COND STG. TNK.BLDG.	881 882 883 884 885 886	141 142 143 144 145 146	
DIESEL FIRE PUMP ROOM	885	116	
CHILLER BLDG.	980 981 982	175 176 177	
SCREEN HOUSE	983 984 985 986	178 179 180 181	

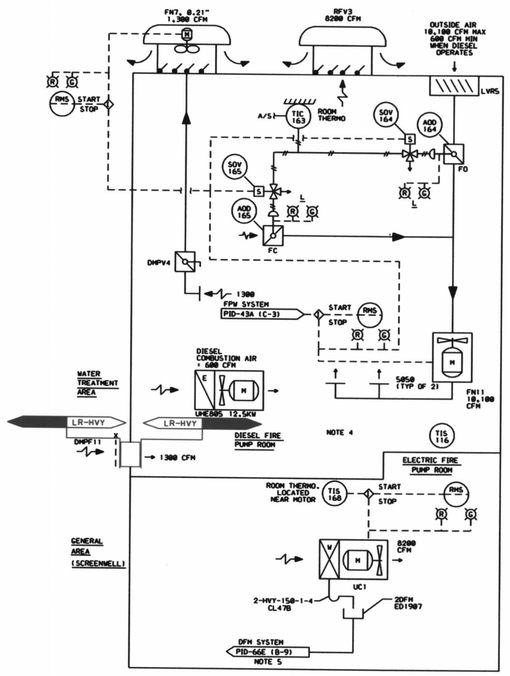

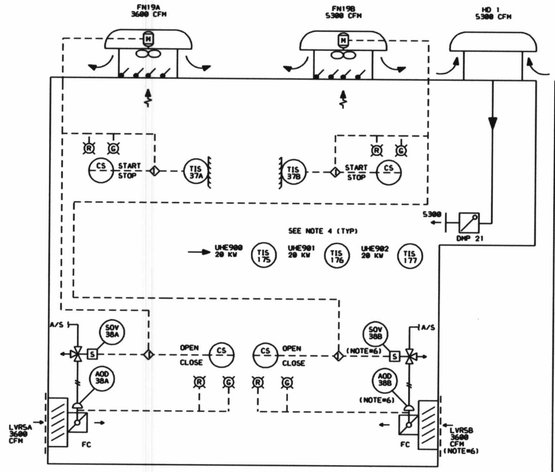

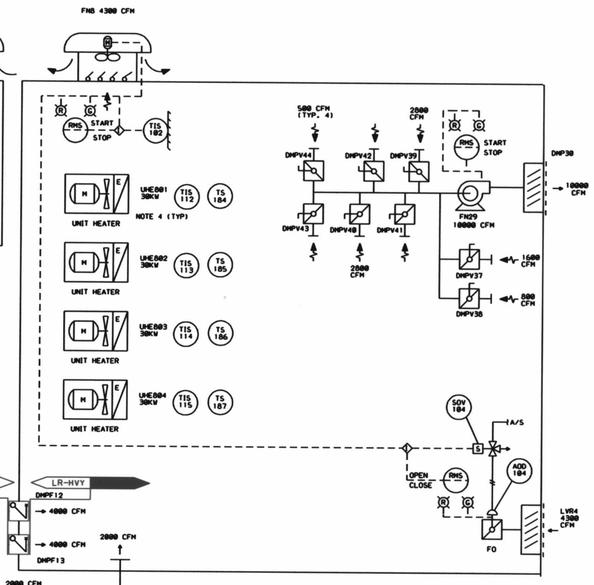

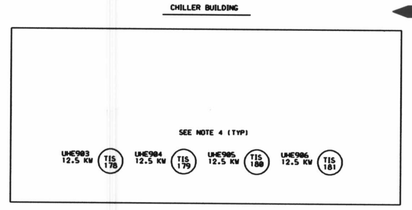

NOTES.

1. ALL INSTRUMENT & EQUIPMENT NUMBERS TO BE PREFIXED WITH "2HVY-" EXCEPT WHERE A DIFFERENT PREFIX IS SHOWN.
2. DELETED.
3. ALL DUCTWORK SHOWN ARE QA CAT II
4. TYPICAL LOOP ARRANGEMENT IS SHOWN FOR UNIT HEATERS WHICH ARE IDENTIFIED IN EACH AREA.
5. NO FLAG SHOWN ON CORRESPONDING DOCUMENT. COORDINATES PROVIDE INTERFACE LOCATION.
6. 2HVY-LVR5B, 2HVY-AOD38B AND 2HVY-SOV38B ARE ABANDONED IN PLACE. 2HVY-AOD38B IS MANUALLY IN THE CLOSED POSITION.

LR NOTE:
PLEASE REFER TO DRAWING LR-000 SHEETS 2A THROUGH 2F FOR LR BOUNDARY DRAWING NOTES, SYMBOLS, AND ACRONYMS.

THIS DRAWING WAS PRODUCED ELECTRONICALLY. DO NOT MAKE ANY CHANGES MANUALLY.

REF. SAR. FIG. 9.4-2b
NON-SAFETY RELATED

Constellation Energy Group

NINE MILE POINT NUCLEAR STATION
UNIT 2 - SCRIBA, N.Y.

PIPING & INSTRUMENTATION DIAGRAM
SCREENWELL & DIESEL FIRE PUMP ROOM VENT

SCALE NONE | DRAWING NO LR-58B-0

MF	REV	DATE	DESCRIPTION OF REVISION	M.O.	DFT	DES	CHKD	ENG	ELEC	MECH	STR

...\LR-058_b.dgn 5/14/2004 2:19:03 PM

198