LR-50A-0 ON SHEARED

LR NOTE:
PLEASE REFER TO DRAWING LR-000 SHEETS 2A THROUGH 2F
FOR LR BOUNDARY DRAWING NOTES, SYMBOLS, AND ACRONYMS.

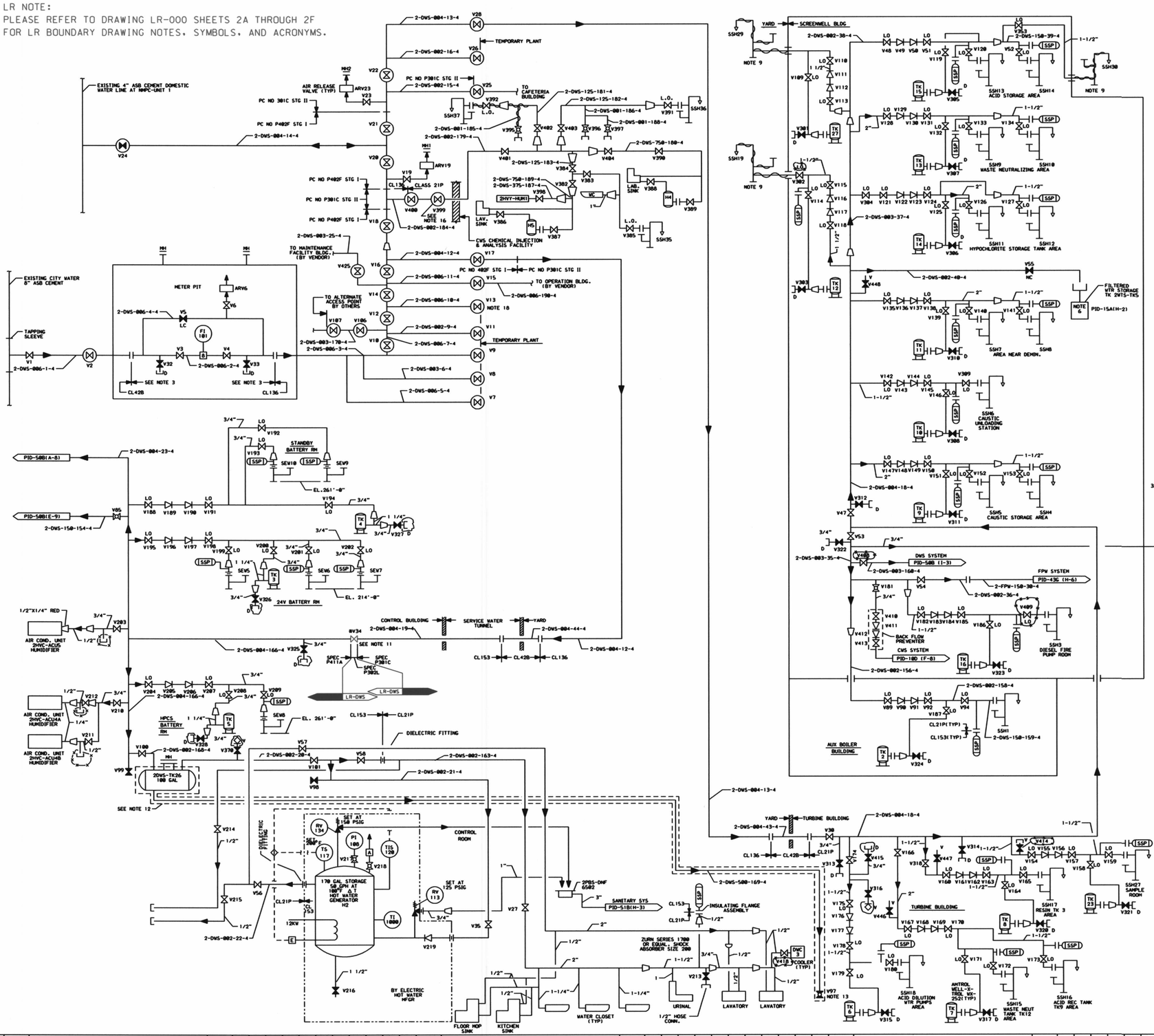

MARK NUMBER	VALVE DESCRIPTION	SIZE	NO. OF VALVES
V1 THRU V5,V7, V9,10,12,13,14, V15,16	SUPPLIED BY CONTRACTOR NOTE 17	6"	13
V6,11,19,23,25, V26,27,35,48,51, V54,55,56,57,58, V69,92		2"	17
V8,53, 486		3"	3
V17,18,20,21,22, V24,28,38,47		4"	9
V32,33		3/4"	2
V52		1-1/2"	1
V49,50,90,91		2"	4
V85		1-1/2"	1
V34	VGW015-R-3K	4"	1
V97	VO5060-C-4	1/2"	1
V98,100,101	VP5015-H-4	2"	3
V99	VPW015-HA-4K	4"	1
V186,187,425	SUPPLIED BY CONTRACTOR NOTE 17	3"	3
V122,123,129,130		2"	4
V116,155,156, V168,169,176, V177,353		1-1/2"	8
V192,193,194, V199,200,201, V202,203,208, V181		3/4"	10
V219	BY HW GEN MFR	2"	1
V211,212,214,215	SUPPLIED BY CONTRACTOR NOTE 17	1/2"	4
V115,118,120,126, V127,133,134,140, V141,152,153,154, V157,158,159,164, V165,167,170,171, V172,173,175,178, V179,180, 302,318 V309,409		1-1/2"	30
V94,119,121,124, V125,128,131,132, V139,146,151,166, V186,187,384		2"	15
V217,618	BY HW GEN MFR	3/4"	2
V216	SUPPLIED BY CONTRACTOR NOTE 17	1-1/2"	1
V142,145,182,185 V118,113,114,160 V163,174,189		1-1/2"	11
V213,410		1/2"	2
V135,138,147,150		2"	4
V136,137,148,149		2"	4
V143,144,183,184 V111,112,117,161 V162		1-1/2"	9
V188,191,195,198 V284,287,210		3/4"	7
V189,190,196,197 V285,286,289		3/4"	7
V301,303,305,306 V307,308,310,311 V312,313,314,315 V316,317,320,321 V322,323,324,325 V326,327,328 V410,411,412,413, V414,415		3/4"	29
V370	SUPPLIED BY CONTRACTOR	3/4"	1 — NOTE 17
V302,303,304,305, V391,402,403	BY VENDOR	1 1/4"	7
V306,307,308, V389,390,404	BY VENDOR	3/4"	6
V392,395,396,397	BY VENDOR	1"	4
V398	BY VENDOR	3/8"	1
V399,400,401	BY VENDOR	2"	3
V300,V300	VGM020-C-4	3/4"	2
V446,447,448	BY VENDOR	3/4"	3

NOTES.

1. ALL INSTRUMENT & EQUIPMENT NUMBERS TO BE PREFIXED WITH "2DWS-" EXCEPT WHERE A DIFFERENT PREFIX IS SHOWN.
2. ALL PRESSURE, VENT AND DRAIN CONNECTIONS ARE 3/4" UNLESS SHOWN OTHERWISE.
3. GRAY CAST IRON FLANGED PIPE, CLASS 125 LB., ANSI STD. A21.6, THICKNESS CLASS 22, FLANGES 125 LB., CAST IRON, SCREWED, ANSI STD. B16.1.
4. ALL CONNECTIONS TO PLUMBING FIXTURES (INDICATED BY LIGHTWEIGHT LINES) ARE CLASS 21P. FOR FITTINGS & VALVES SEE SPEC P411A.
5. PURCHASE CONTRACTS.
   PC NO P381C - YARD WATER AND SEWER LINES - STG II
   PC NO P402F - YARD WATER LINES - STG I
   PC NO P411A - PLUMBING SYSTEM
6. WATER SUPPLY INLET WITHIN THE TANK SHALL TERMINATE AT AN ELEVATION ABOVE THE OVERFLOW PIPE NOT LESS THAN 8 . THE OVERFLOW PIPE SIZE SHALL BE AT LEAST ONE PIPE SIZE LARGER THAN TANK FILL PIPES.
7. ALL MAIN SUPPLY LINES PROVIDED WITH LINE & VALVE DESIGNATION. ALL OTHER SUPPLEMENTARY LINES & VALVES NOT NUMBERED.
8. ALL SSH IN THIS PID ARE SAFETY SHOWERS & EYE WASHES.
9. FROST PROOF SAFETY SHOWER & EYE WASH ONLY. SAFETY SHOWER HEAT TRACING BY VENDOR-110V, 60 CYCLE POWER SUPPLY BY S&W.
10. PIPING IN CONTROL BUILDING WILL BE SEISMICALLY SUPPORTED AS DETERMINED BY SWEC EM GROUP.
11. 2DWS&V34 IS ASME III CLASS 3, NOT CODE STAMPED, USE IN A QA CAT III NON-SAFETY RELATED SEISMIC CAT II APPLICATION
12. EMERGENCY DRINKING WATER STORAGE TANK 2DWS-TK36, LINE 2-DWS-500-169-4 AND VALVE V97 INDICATED WITHIN DASHED LINES ARE TO BE SEISMICALLY SUPPORTED.
13. LOCATE VALVE V97 OVER FLOOR MOP SINK.
14. INSULATING FLANGE ASSEMBLY IS USED AT ALL PRESSURE MAINTENANCE TANKS, SURGE SUPPRESSORS, AND SAFETY SHOWER, EYE WASHES FOR CL 21P, CL 153 INTERFACE.
15. NO FLAG SHOWN ON CORRESPONDING DOCUMENT. COORDINATES PROVIDE INTERFACE LOCATION.
16. 2DWS-V399 REQUIRES A NON STANDARD WRENCH E.G. 3/4" X 1" SLOTTED.
17. DRAIN, HIGH POINT VENT AND HOSE CONNECTION VALVES SHALL BE 3/4 IN. GLOBE OR GATE VALVES.
18. SUPPLY FOR MAKEUP TO ADH SYSTEM COOLING TOWERS IS TAKEN FROM PLANT DWS PIPING DOWNSTREAM OF 2DWS-V13. REFER TO PID-115A FOR DETAIL CONFIGURATION.

NOTE. THOSE AREAS INDICATED WITHIN THE LINES REPRESENT UNINSTALLED AND/OR UNTESTED COMPONENTS ON THIS DWG.

THIS DRAWING WAS PRODUCED ELECTRONICALLY. DO NOT MAKE ANY CHANGES MANUALLY.

SAFETY RELATED
QUALITY RELATED
NON-SAFETY RELATED
(REF. FIG. 9.2-8a)

Constellation Energy Group
NINE MILE POINT NUCLEAR STATION
UNIT 2 - SCRIBA, N.Y.

PIPING & INSTRUMENTATION DIAGRAM
DOMESTIC WATER

SCALE NONE | DRAWING NO LR-50A-0

NF	REV	DATE	DESCRIPTION OF REVISION	M.O.	DFT	DES	CHKD	ENG	ELEC	MECH	STR

...\LR-050_a.dgn 5/14/2004 1:31:34 PM

180