D111

LR-6B-0

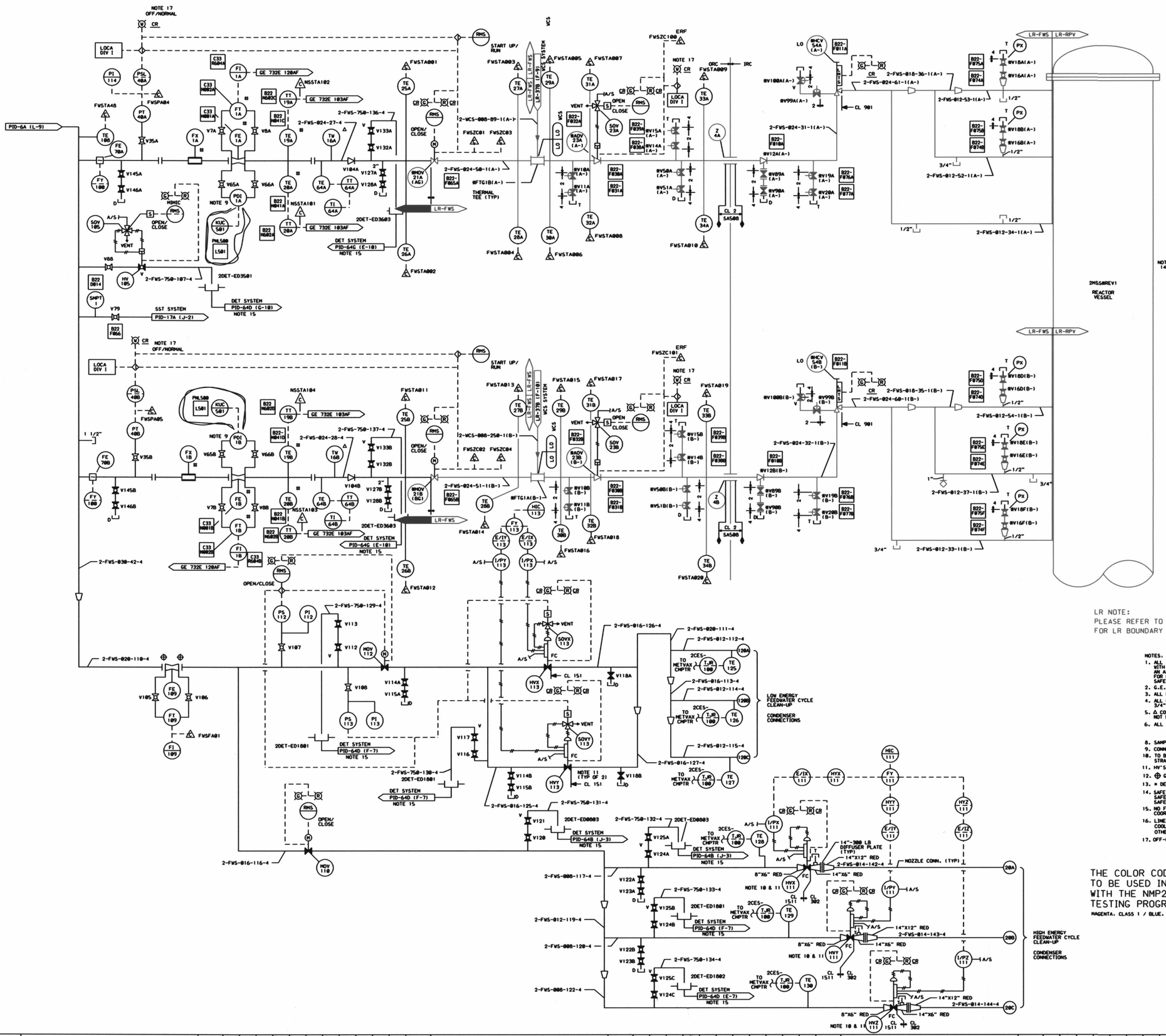

FEEDWATER SYSTEM "2FWS-" VALVE TABLE

MARK NUMBER	VALVE DESCRIPTION	SIZE	NO. OF VALVES
AOV23A,B	VCW090-E-1YQ	24"	2
HCV54A,B	VAV105-G-1ZDQ	24"	2
HV105	VSS150-C-4Q	3/4"	1
MOV21A,B	VGW090-F-1YQ	24"	2
MOV110	VGW09X-F-4WQ	16"	1
MOV112	VGW09X-F-4YQ	20"	1
V7A,B,8A,B, V35A,B,66A,B, V66A,B,88, V105,106,107, V108,112,113, V114A,B,115A,B, V116,117,120, V121,122A,B, V123A,B,124A,B,C, V125A,B,C,132A,B, V133A,B	VOS150-F-4	3/4"	39
V10A,B,11A,B, V14A,B,15A,B, V19A,B,20A,B, V50A,B,51A,B V99A,B,100A,B	VSS150-B-2	3/4"	20
V12A,B	VCW090-E-1ZDQ	24"	2
V16A,B, D,E,F V18A,B, D,E,F	VOW150-G-1H	3/4"	10
V79	VOS150-W-4	3/4"	1
V104A,B	VCW09X-D-4Y	24"	2
V118A,B	VGS060-C-4	3/4"	2
V127A,B,128A,B	VOS150-F-4	2"	4
V145A,B V146B	VOS150-F-3	2"	3
V146A	VOS150-F-1	2"	1
V89A,90A V89B,90B	VGS150-B-2	3/4"	4

NOTE 14

LR NOTE:
PLEASE REFER TO DRAWING LR-000 SHEETS 2A THROUGH 2F FOR LR BOUNDARY DRAWING NOTES, SYMBOLS, AND ACRONYMS.

NOTES:
1. ALL INSTRUMENT & EQUIPMENT NUMBERS TO BE PREFIXED WITH "2FWS" EXCEPT WHERE A DIFFERENT PREFIX IS SHOWN. AN ASTERISK (*) WILL REPLACE THE DASH (-) IN THE PREFIX FOR EQUIPMENT OR INSTRUMENTS WHICH ARE PART OF NUCLEAR SAFETY FEATURES SYSTEM.
2. G.E. IDENTIFICATION NUMBERS ARE SHOWN IN SQUARES.
3. ALL PIPING IS CLASS 1511 EXCEPT AS NOTED.
4. ALL PRESSURE, TEST, VENT & DRAIN CONNECTIONS ARE 3/4" UNLESS OTHERWISE NOTED.
5. △ CONNECTIONS ONLY PROVIDED FOR ASME TEST. INSTRUMENTS WILL NOT BE FURNISHED.
6. ALL VENT HV'S FAIL CLOSED.
8. SAMPLE CONNECTIONS PER GE DOCUMENT NO. 22A2788 (MPL A62-4240).
9. CONNECTIONS FOR POI TO BE PROVIDED IN LOCAL INSTRUMENT RACK.
10. TO BE LOCATED AS CLOSE TO THE CONDENSER AS POSSIBLE IN A STRAIGHT HORIZONTAL RUN AS POSSIBLE.
11. HV'S 111 & 113 ARE TO BE PURCHASED BY CONTROLS DIVISION.
12. ⊕ GRAYLOCK COUPLING.
13. * DENOTES SUPPLIED BY GE-NED.
14. SAFETY CLASS 3 VALVES USED FOR 2FWS-V145A,B,V146B AND SAFETY CLASS 1 VALVE USED FOR 2FWS-V146A DUE TO AVAILABILITY. SAFETY CLASS 4 VALVES MAY BE USED AS REPLACEMENTS.
15. NO FLAG SHOWN ON CORRESPONDING DOCUMENT. COORDINATES PROVIDE INTERFACE LOCATION.
16. LINES ONE INCH AND SMALLER WHICH ARE PART OF THE REACTOR COOLANT PRESSURE BOUNDARY SHALL BE SAFETY CLASS 2 UNLESS OTHERWISE NOTED.
17. OFF-NORMAL STATUS DISPLAY SYSTEM IS ABANDONED IN PLACE.

THIS DRAWING WAS PRODUCED ELECTRONICALLY. DO NOT MAKE ANY CHANGES MANUALLY.

THE COLOR CODED DRAWING AND (LO | EX2) THIS FLAG TO BE USED IN CONJUNCTION WITH THE NMP2 INSERVICE PRESSURE TESTING PROGRAM PLAN.

MAGENTA, CLASS 1 / BLUE, CLASS 2 / GREEN, CLASS 3 / BLACK, CLASS 4 OR EXEMPT FROM TESTING

QUALITY RELATED
SAFETY RELATED
NON-SAFETY RELATED
(REF. SAR FIG. 10.1-6b & ISPT-6B)

Constellation Energy Group

NINE MILE POINT NUCLEAR STATION UNIT 2 - SCRIBA, N.Y.

PIPING & INSTRUMENTATION DIAGRAM
FEEDWATER SYSTEM

PRESSURE TESTING DIAGRAM

SCALE NONE | DRAWING NO LR-6B-0

MF	REV	DATE	DESCRIPTION OF REVISION	M.O.	DFT	DES	CHKD	ENG	EPROG	ELEC	MECH	STR

...\LR-006_b.dgn 5/14/2004 9:56:17 AM

D-111