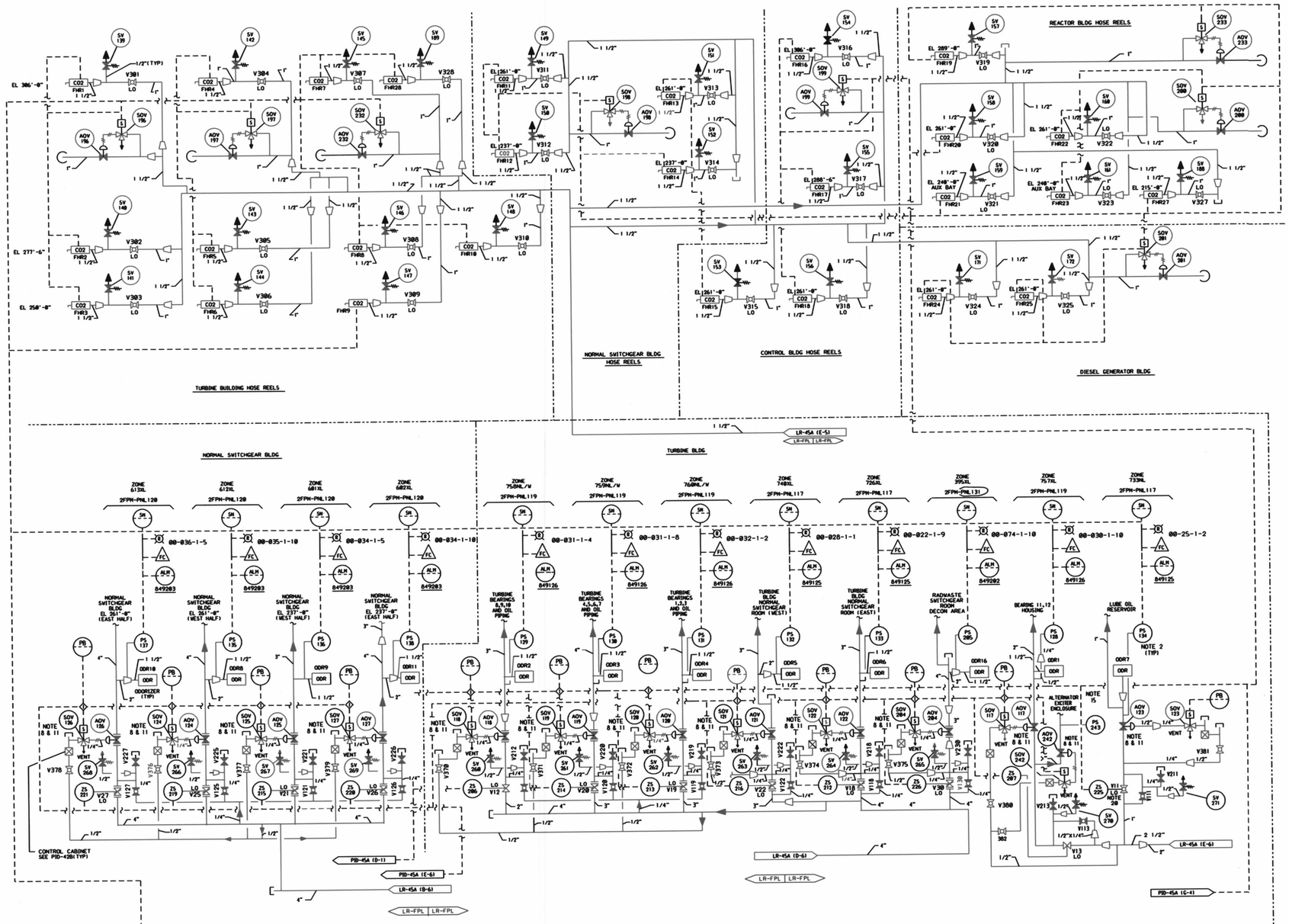


| MARC NUMBER | VALVE DESCRIPTION | SIZE | NO. OF VALVES |
|---|---|---|---|
| AOV124,126,127 | SUPPLIED BY CONTRACTOR SPEC P402M | 4" | 3 |
| AOV119,120,121,122, AOV125,2084 | | 3" | 6 |
| AOV117,118 | | 2" | 2 |
| AOV123,196,197,198, AOV199,200,201,232, AOV233 | | 1" | 9 |
| AOV242 | | 1/2" | 1 |
| SOV117,118,119,120, SOV121,122,124,125, SOV126,127,2084,242 | | 1/2" | 12 |
| SOV123,196,197,198, SOV199,200,201, SOV232,233 | | 1/4" | 9 |
| SV139,140,141,142 SV143,144,145,146 SV147,148,149,150 SV151,152,153,154 SV155,156,157,158 SV159,160,161,171 SV172,188,189,260, SV261,262,263,264, SV265,266,267,268, SV269,270,271 | | 1/2" | 39 |
| V25,26,27,30 | | 4" | 4 |
| V18,19,20,21,22 | | 3" | 5 |
| V12,13 | | 2" | 2 |
| V11,301,302,303, V304,305,306,307, V308,309,310,311, V312,313,314,315, V316,317,318,319, V320,321,322,323, V324,325,327,328 | | 1" | 28 |
| V111,112,113,118, V119,120,121,122, V125,126,127,130, V211,212,213,216, V219,220,221,222, 225,226,227,230 | | 1/4" | 24 |
| V370,371,372,373, V374,375,376,377, V378,379,380,381, V382 | | 1/4" | 13 |

| ZONE NO. | ZONE DESCRIPTION |
|---|---|
| 253NL | REACTOR BUILDING 600 VOLT SWITCHGEAR ROOM EL 289'-0" |
| 333NL | STANDBY SWITCHGEAR ROOM DIV I |
| 334NL | STANDBY SWITCHGEAR ROOM DIV II |
| 342NL | HPCS SWITCHGEAR ROOM |
| 395NL | RADWASTE SWITCHGEAR ROOM -DECON AREA |
| 601NL | NORMAL SWITCHGEAR BUILDING EL237'-0"(WEST HALF) |
| 602NL | NORMAL SWITCHGEAR BUILDING EL237'-0"(EAST HALF) |
| 612NL | NORMAL SWITCHGEAR BUILDING EL261'-0"(WEST HALF) |
| 613NL | NORMAL SWITCHGEAR BUILDING EL261'-0"(EAST HALF) |
| 726NL | TURBINE BUILDING NORMAL SWITCHGEAR (EAST) |
| 733NL | LUBE OIL RESERVOIR |
| 740NL | TURBINE BUILDING NORMAL SWITCHGEAR ROOM (WEST) |
| 757NL | ALTERNATOR EXCITER ENCLOSURE AND TURBINE BEARINGS 11 & 12 |
| 759NL/W | TURBINE BEARINGS 8,9,10 AND OIL PIPING |
| 760NL/W | TURBINE BEARINGS 4,5,6,7 AND OIL PIPING |
| 760NL/W | TURBINE BEARINGS 1,2,3 AND OIL PIPING |

NOTES:
1. SEE PID-45A FOR NOTES

THIS DRAWING WAS PRODUCED ELECTRONICALLY. DO NOT MAKE ANY CHANGES MANUALLY.

QUALITY RELATED
NON-SAFETY RELATED
(REF. SAR FIG. 9.5-3c)

LR NOTE:
PLEASE REFER TO DRAWING LR-000 SHEETS 2A THROUGH 2F
FOR LR BOUNDARY DRAWING NOTES, SYMBOLS, AND ACRONYMS.

Constellation Energy Group
NINE MILE POINT NUCLEAR STATION
UNIT 2 - SCRIBA, N.Y.

PIPING AND INSTRUMENTATION DIAGRAM
FIRE PROTECTION
$CO_2$ SYSTEM

SCALE NONE | DRAWING NO LR-45C-0

| MF | REV | DATE | DESCRIPTION OF REVISION | M.O. | DFT | DES | CHKD | ENG | ELEC | MECH | STR |
|---|---|---|---|---|---|---|---|---|---|---|---|

...\LR-045_c.DGN 5/14/2004 1:23:34 PM

D 178