121

LR-11L-0

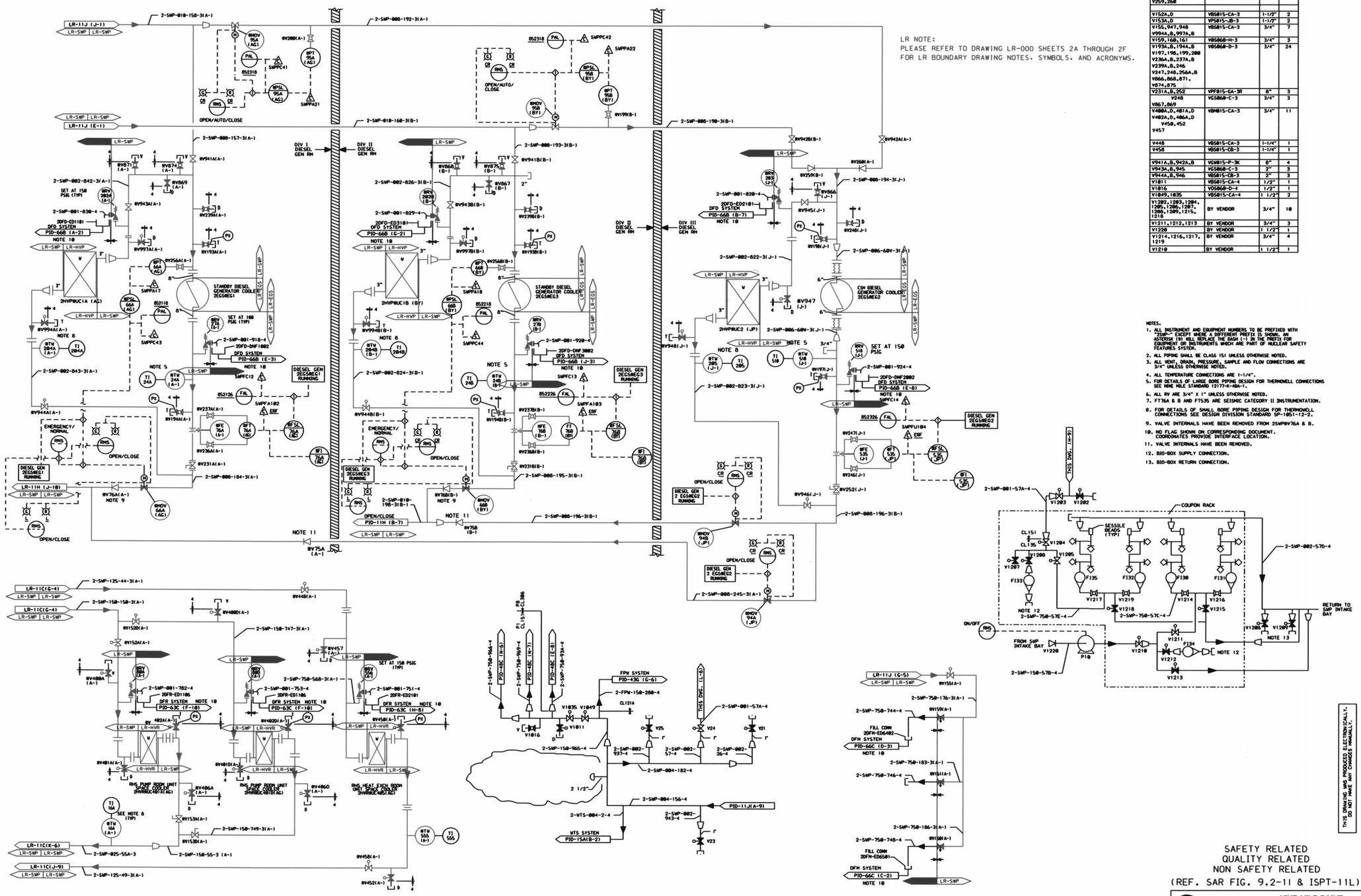

LR NOTE:
PLEASE REFER TO DRAWING LR-000 SHEETS 2A THROUGH 2F FOR LR BOUNDARY DRAWING NOTES, SYMBOLS, AND ACRONYMS.

MARK NUMBER	VALVE DESCRIPTION	SIZE	NO. OF VALVES
MOV66A,66B,94A MOV94B,95A,95B	VGW015-P-3KQ	8"	6
V21,25,23,24	VBM015-CA-4	1"	4
V75A,B,76A,B V259,260	VCW015-E-3K	8"	6
V152A,D	VBS015-CA-3	1-1/2"	2
V153A,D	VPS015-JB-3	1-1/2"	2
V155,947,948 V994A,B,997A,B	VBS015-CA-3	3/4"	7
V159,160,161	VOS060-H-3	3/4"	3
V193A,B,194A,B V197,198,199,200 V236A,B,237A,B V239A,B,246 V247,248,256A,B V866,868,871, V874,875	VOS060-D-3	3/4"	24
V231A,B,252	VPF015-GA-3R	8"	3
V248 V867,869	VGS060-C-3	3/4"	3
V400A,D,401A,D V402A,D,406A,D V450,452 V457	VBM015-CA-3	3/4"	11
V448	VBS015-CA-3	1-1/4"	1
V458	VBS015-CB-3	1-1/4"	1
V941A,B,942A,B	VGW015-P-3K	8"	4
V943A,B,945	VGS060-C-3	2"	3
V944A,B,946	VBS015-CB-3	2"	3
V1011	VBS015-CA-4	1/2"	1
V1016	VOS060-D-4	1/2"	1
V1049,1035	VBS015-CA-4	1 1/2"	2
V1202,1203,1204, 1205,1206,1207, 1208,1209,1215, 1218	BY VENDOR	3/4"	10
V1211,1212,1213	BY VENDOR	3/4"	3
V1220	BY VENDOR	1 1/2"	1
V1214,1216,1217, 1219	BY VENDOR	3/4"	4
V1210	BY VENDOR	1 1/2"	1

NOTES.

1. ALL INSTRUMENT AND EQUIPMENT NUMBERS TO BE PREFIXED WITH "2SWP-" EXCEPT WHERE A DIFFERENT PREFIX IS SHOWN. AN ASTERISK (*) WILL REPLACE THE DASH (-) IN THE PREFIX FOR EQUIPMENT OR INSTRUMENTS WHICH ARE PART OF NUCLEAR SAFETY FEATURES SYSTEM.
2. ALL PIPING SHALL BE CLASS 151 UNLESS OTHERWISE NOTED.
3. ALL VENT, DRAIN, PRESSURE, SAMPLE AND FLOW CONNECTIONS ARE 3/4" UNLESS OTHERWISE NOTED.
4. ALL TEMPERATURE CONNECTIONS ARE 1-1/4".
5. FOR DETAILS OF LARGE BORE PIPING DESIGN FOR THERMOWELL CONNECTIONS SEE NINE MILE STANDARD 12177-K-48A-1.
6. ALL RV ARE 3/4" X 1" UNLESS OTHERWISE NOTED.
7. FT76A & B AND FT535 ARE SEISMIC CATEGORY II INSTRUMENTATION.
8. FOR DETAILS OF SMALL BORE PIPING DESIGN FOR THERMOWELL CONNECTIONS SEE DESIGN DIVISION STANDARD SP-1051-12-2.
9. VALVE INTERNALS HAVE BEEN REMOVED FROM 2SWP#V76A & B.
10. NO FLAG SHOWN ON CORRESPONDING DOCUMENT. COORDINATES PROVIDE INTERFACE LOCATION.
11. VALVE INTERNALS HAVE BEEN REMOVED.
12. BIO-BOX SUPPLY CONNECTION.
13. BIO-BOX RETURN CONNECTION.

THIS DRAWING WAS PRODUCED ELECTRONICALLY. DO NOT MAKE ANY CHANGES MANUALLY.

SAFETY RELATED
QUALITY RELATED
NON SAFETY RELATED
(REF. SAR FIG. 9.2-11 & ISPT-11L)

Constellation Energy Group
NINE MILE POINT NUCLEAR STATION UNIT 2 - SCRIBA, N.Y.

PIPING & INSTRUMENTATION DIAGRAM
SERVICE WATER SYSTEM

SCALE NONE | DRAWING NO LR-11L-0

MF	REV	DATE	DESCRIPTION OF REVISION	M.O.	DFT	DES	CHKD	ENG	ELEC	MECH	STR	MF	REV	DATE	DESCRIPTION OF REVISION	M.O.	DFT	DES	CHKD	ENG	ELEC	MECH	STR	MF	REV	DATE	DESCRIPTION OF REVISION	M.O.	DFT	DES	CHKD	ENG	ELEC	MECH	STR

...\LR-011_I.dgn 5/14/2004 10:09:22 AM