811Q

LR-11G-0

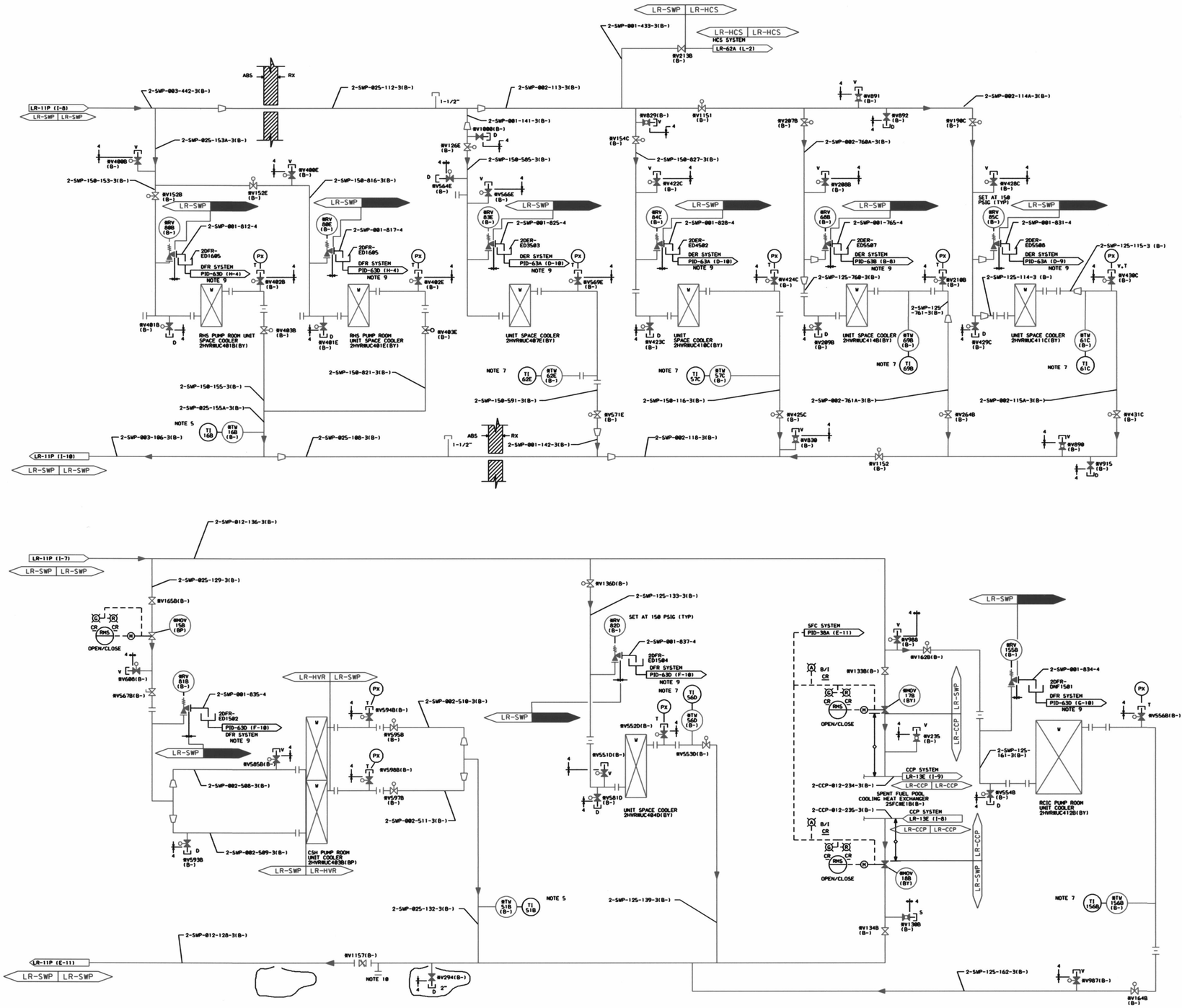

MARK NUMBER	VALVE DESCRIPTION	SIZE	NO. OF VALVES
MOV15B	VGW015-P-3KQ	2-1/2"	1
MOV17B,18B	VGW015-P-3KQ	12"	2
V126E	VB5015-CA-3	1 1/2"	1
V130B,235, V829,830,890, V891	VB5060-D-3	3/4"	6
V133B,134B	VGW015-P-3K	12"	2
V136D,162B	VB5015-CA-3	1-1/4"	2
V152B,152E,154C	VB5015-CA-3	1-1/2"	3
V164B,553D	VB5015-CB-3	1-1/4"	2
V165B	VGW015-P-3K	2-1/2"	1
V208B,209B,210B V408B,408E V401B,401E,402B V402E,422C,423C V423C,428C,429C V430C,551D,552D V554B,556B,564E V566E,569E,581D V585B,593B,594B V598B	VBW015-CA-3	3/4"	27
V213B	VG5060-C-3	1"	1
V294	VC5060-C-3	2"	1
V403B,403E,425C	VB5015-CB-3	1-1/2"	3
V567B	VPW015-G-3K	2-1/2"	1
V571E	VB5015-CB-3	1-1/2"	1
V595B,597B V264B,431C	VB5015-CB-3	2"	4
V680,987,988	VB5015-CA-3	3/4"	3
V892,915,1000	VG5060-C-3	3/4"	3
V1151,1152, V190C,207B	VB5015-CA-3	2"	4
V1157	VVF000-D-3R	12"	1

NOTES.

1. ALL INSTRUMENT & EQUIPMENT NUMBERS TO BE PREFIXED WITH "2SWP-" EXCEPT WHERE A DIFFERENT PREFIX IS SHOWN. AN ASTERISK (*) WILL REPLACE THE DASH (-) IN THE PREFIX FOR EQUIPMENT OR INSTRUMENTS WHICH ARE PART OF NUCLEAR SAFETY FEATURES SYSTEM.
2. ALL PIPING SHALL BE CLASS 151 UNLESS OTHERWISE NOTED.
3. ALL VENT,DRAIN,PRESSURE,SAMPLE,AND FLOW CONNECTIONS. ARE 3/4" UNLESS OTHERWISE NOTED.
4. ALL TEMPERATURE CONNECTIONS ARE 1-1/4".
5. FOR DETAILS OF PIPING DESIGN FOR THERMOWELL CONNECTIONS SEE DESIGN DIVISION STANDARD 12177-K-48A-1.
6. ALL RV ARE 3/4"X1" UNLESS OTHERWISE NOTED.
7. FOR DETAILS OF PIPING DESIGN FOR THERMOWELL CONNECTIONS SEE DESIGN DIVISION STANDARD SP-1051-12-2.
8. ⊸—O—⊸ DENOTES MINIMUM DISTANCE FOR INSTALLATION.
9. NO FLAG SHOWN ON CORRESPONDING DOCUMENT. COORDINATES PROVIDE INTERFACE LOCATION.
10. THIS CONNECTION WAS DESIGNED FOR USE DURING CHEMICAL CLEANING. ANY OTHER USE REQUIRING THE ATTACHMENT OF PIPING, FITTINGS OR EQUIPMENT SHALL BE EVALUATED BY ENGINEERING PRIOR TO USE.

LR NOTES:
PLEASE REFER TO DRAWING LR-000 SHEETS 2A THROUGH 2F FOR LR BOUNDARY DRAWING NOTES, SYMBOLS, AND ACRONYMS.

LR NOTES.
TYPICAL AHR BOUNDARY FLAGGING FOR HVR COOLER

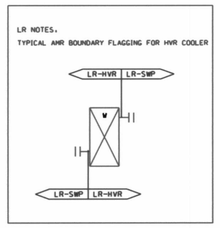

THIS DRAWING WAS PRODUCED ELECTRONICALLY, DO NOT MAKE ANY CHANGES MANUALLY.

SAFETY RELATED
QUALITY RELATED
NON-SAFETY RELATED
(REF. SAR FIG. 9.2-1g & ISPT-11G)

Constellation Energy Group

NINE MILE POINT
NUCLEAR STATION
UNIT 2 - SCRIBA, N.Y.

PIPING & INSTRUMENTATION DIAGRAM
SERVICE WATER
SYSTEM

SCALE NONE | DRAWING NO LR-11G-0

NF	REV	DATE	DESCRIPTION OF REVISION	M.O.	DFT	DES	CHKD	ENG	ELEC	MECH	STR	NF	REV	DATE	DESCRIPTION OF REVISION	M.O.	DFT	DES	CHKD	ENG	ELEC	MECH	STR	NF	REV	DATE	DESCRIPTION OF REVISION	M.O.	DFT	DES	CHKD	ENG	ELEC	MECH	STR

...\LR-011_g.dgn 5/14/2004 10:07:11 AM