D113

LR-11B-0

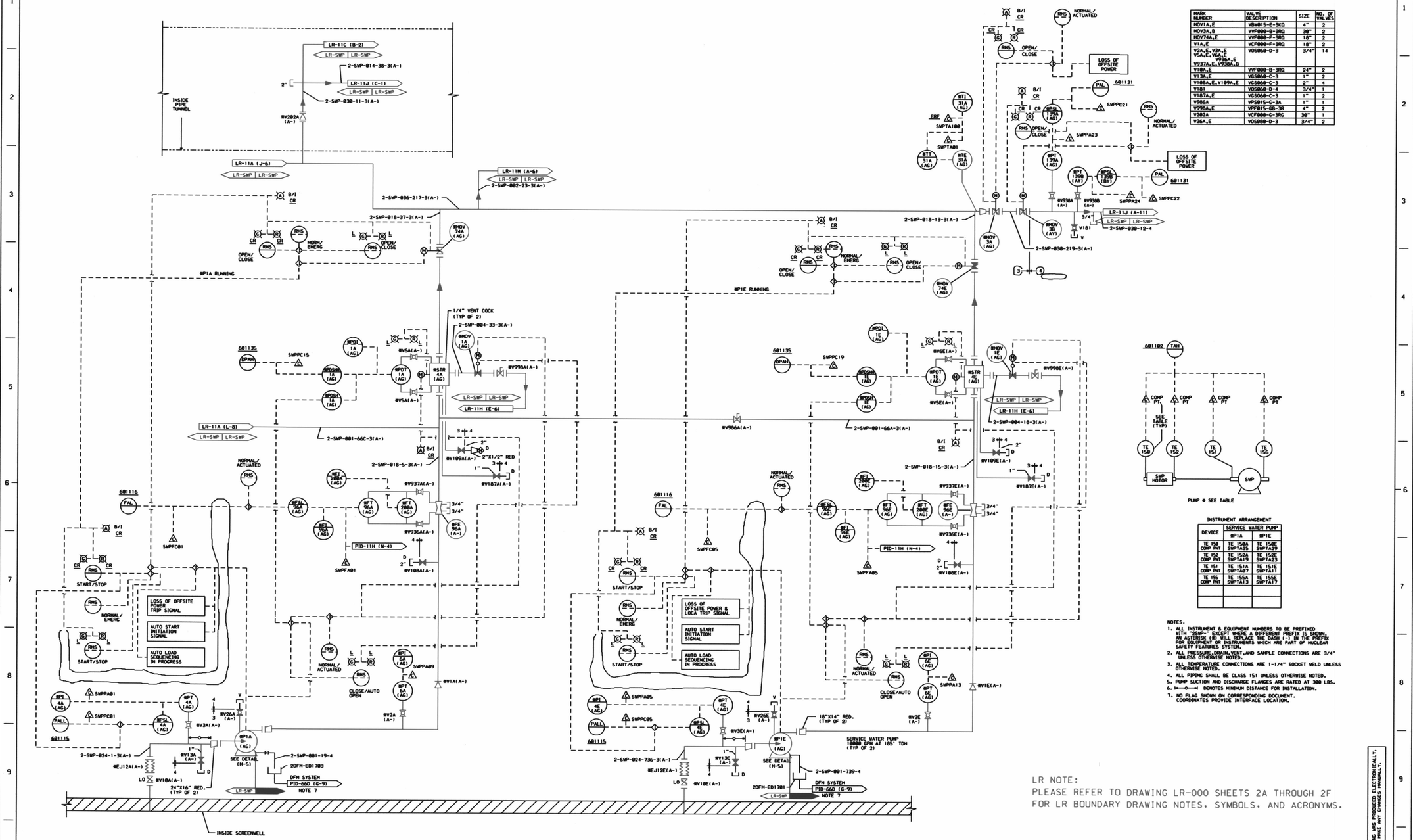

MARK NUMBER	VALVE DESCRIPTION	SIZE	NO. OF VALVES
MOV11A,E	VBW015-E-3RQ	4"	2
MOV3A,B	VVF000-B-3RQ	30"	2
MOV74A,E	VVF000-F-3RQ	18"	2
V1A,E	VCF000-F-3RQ	18"	2
V24,E,V3A,E V5A,E,V6A,E V936A,E V937A,E,V938A,B	VOS060-D-3	3/4"	14
V18A,E	VVF000-B-3RQ	24"	2
V13A,E	VCS060-C-3	1"	2
V108A,E,V109A,E	VCS060-C-3	2"	4
V181	VOS060-D-4	3/4"	1
V187A,E	VCS060-C-3	1"	2
V986A	VPS015-C-3A	1"	1
V998A,E	VPF015-GB-3R	4"	2
V202A	VCF000-C-3RG	30"	1
V26A,E	VOS000-D-3	3/4"	2

INSTRUMENT ARRANGEMENT

DEVICE	SERVICE WATER PUMP #P1A	#P1E
TE 150 COMP PNT	TE 150A SMPTA25	TE 150E SMPTA29
TE 152 COMP PNT	TE 152A SMPTA19	TE 152E SMPTA23
TE 151 COMP PNT	TE 151A SMPTA07	TE 151E SMPTA11
TE 155 COMP PNT	TE 155A SMPTA13	TE 155E SMPTA17

NOTES.

1. ALL INSTRUMENT & EQUIPMENT NUMBERS TO BE PREFIXED WITH "2SMP-" EXCEPT WHERE A DIFFERENT PREFIX IS SHOWN. AN ASTERISK (#) WILL REPLACE THE DASH (-) IN THE PREFIX FOR EQUIPMENT OR INSTRUMENTS WHICH ARE PART OF NUCLEAR SAFETY FEATURES SYSTEM.
2. ALL PRESSURE,DRAIN,VENT,AND SAMPLE CONNECTIONS ARE 3/4" UNLESS OTHERWISE NOTED.
3. ALL TEMPERATURE CONNECTIONS ARE 1-1/4" SOCKET WELD UNLESS OTHERWISE NOTED.
4. ALL PIPING SHALL BE CLASS 151 UNLESS OTHERWISE NOTED.
5. PUMP SUCTION AND DISCHARGE FLANGES ARE RATED AT 300 LBS.
6. ⊢—○—⊣ DENOTES MINIMUM DISTANCE FOR INSTALLATION.
7. NO FLAG SHOWN ON CORRESPONDING DOCUMENT. COORDINATES PROVIDE INTERFACE LOCATION.

LR NOTE:
PLEASE REFER TO DRAWING LR-000 SHEETS 2A THROUGH 2F FOR LR BOUNDARY DRAWING NOTES, SYMBOLS, AND ACRONYMS.

THIS DRAWING WAS PRODUCED ELECTRONICALLY. DO NOT MAKE ANY CHANGES MANUALLY.

SAFETY RELATED
QUALITY RELATED
NON-SAFETY RELATED

Constellation Energy Group
NINE MILE POINT NUCLEAR STATION UNIT 2 - SCRIBA, N.Y.

PIPING & INSTRUMENTATION DIAGRAM
SERVICE WATER SYSTEM

SCALE NONE | DRAWING NO LR-11B-0

MF	REV	DATE	DESCRIPTION OF REVISION	M.O.	DFT	DES	CHKD	ENG	ELEC	MECH	STR

...\LR-011_b.dgn 5/14/2004 9:58:51 AM

D-113