D108

DRAWING NO LR-4A-0

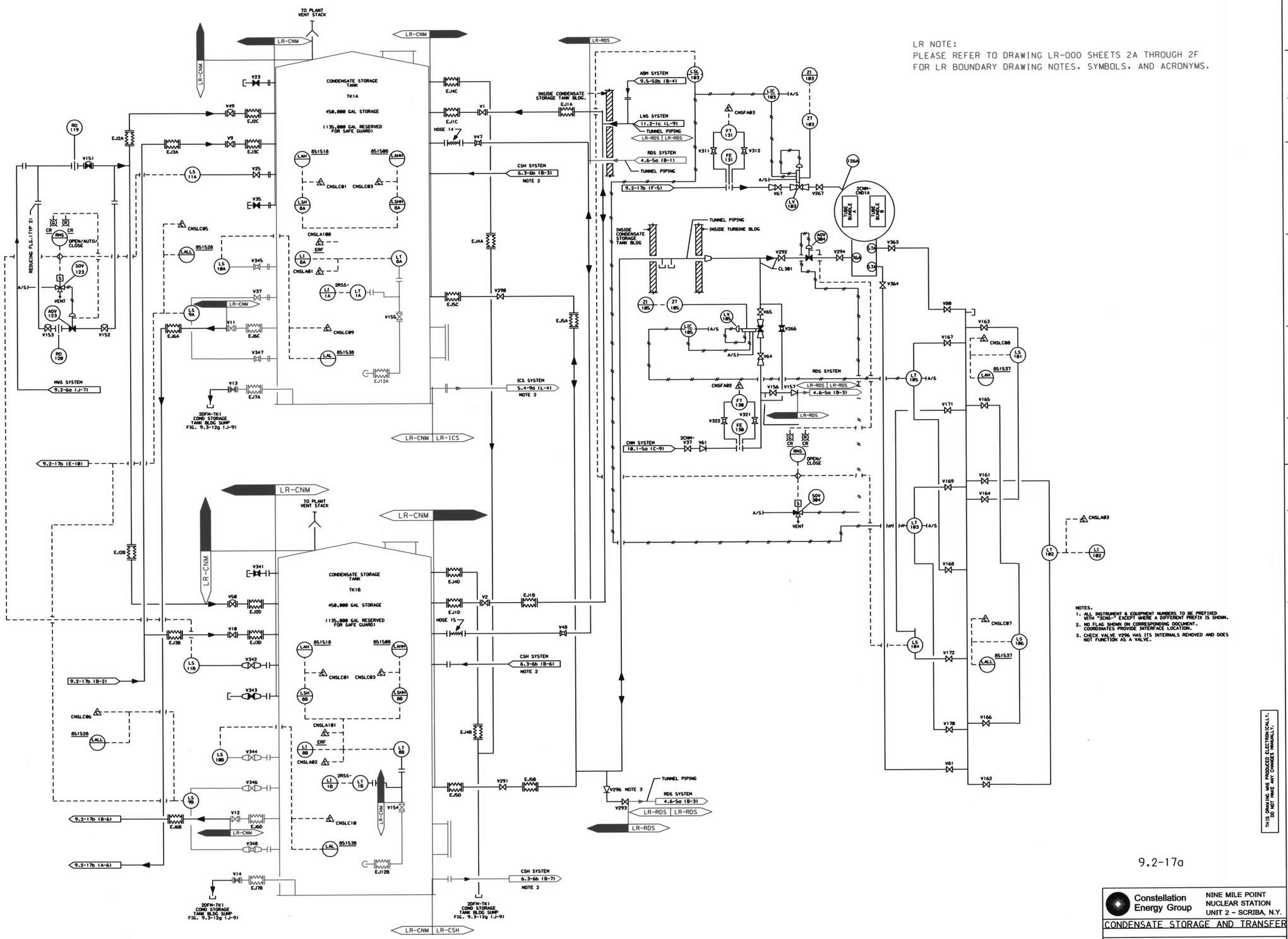

...\LR-004_a.dgn 5/14/2004 9:53:40 AM

D-108