D103

LR-1D-0

MAIN STEAM SAFETY/RELIEF VALVES, VENTS AND DRAINS SYSTEM VALVE TABLE "25VV-"

MARK NUMBER	VALVE DESCRIPTION	SIZE	NO. OF VALVES
RVV103,106,110 RVV114,203,206 RVV210,214	VCW060-Z-3J	10"	8
RVV303,306,310 RVV314	VCW015-Z-3N	2 1/2"	4

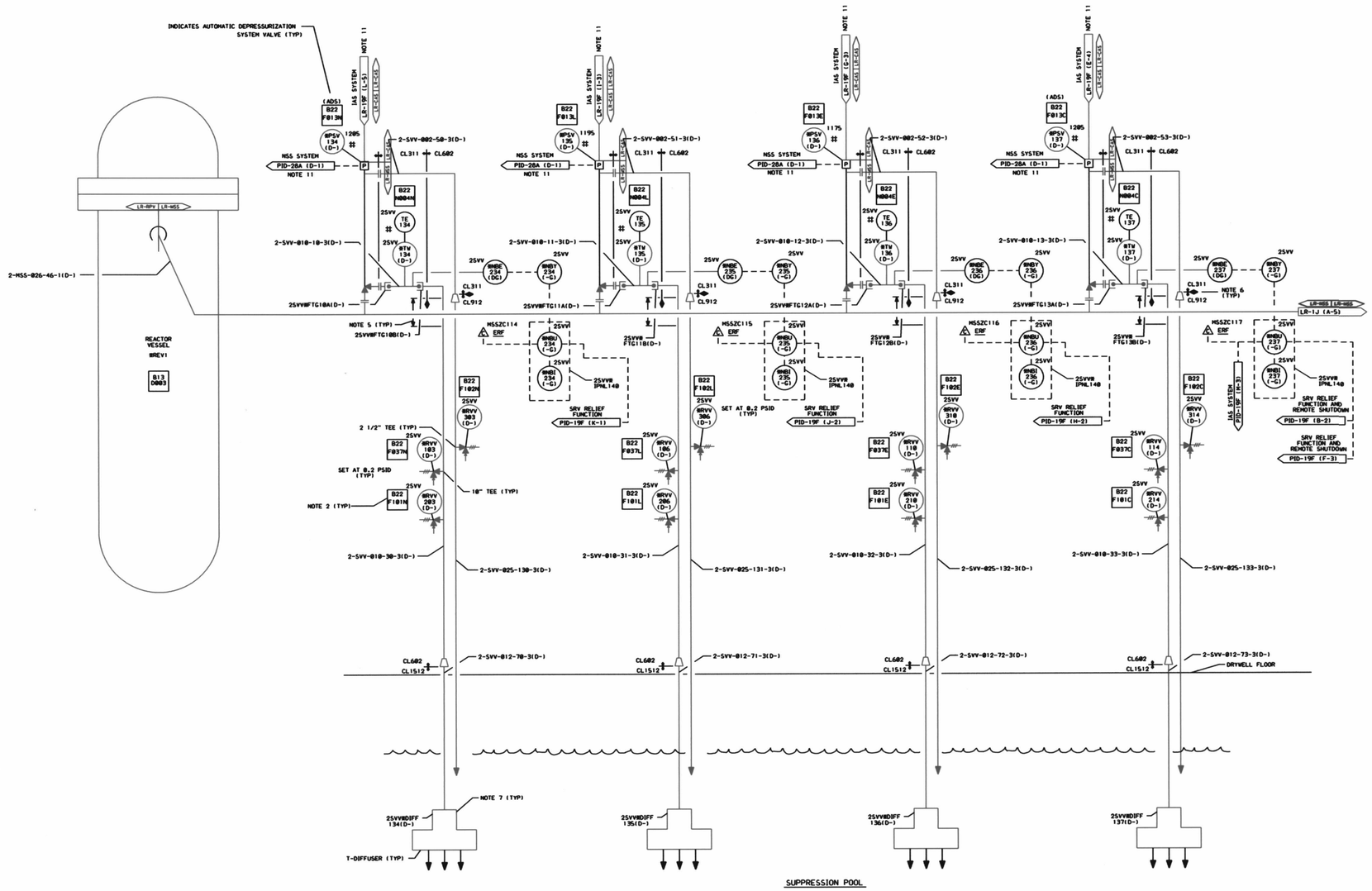

NOTES.

1. ALL INSTRUMENT & EQUIPMENT NUMBERS TO BE PREFIXED WITH "2MSS-" EXCEPT WHERE A DIFFERENT PREFIX IS SHOWN. AN ASTERISK (#) WILL REPLACE THE DASH (-) IN THE PREFIX FOR THE EQUIPMENT OR INSTRUMENTS WHICH ARE A PART OF THE NUCLEAR SAFETY FEATURES SYSTEMS.
2. GENERAL ELECTRIC IDENTIFICATION NUMBERS ARE SHOWN IN SQUARES.
3. ALL PIPING SHALL BE CLASS 901 UNLESS OTHERWISE NOTED.
4. SPRING SET PRESSURE SHOWN ADJACENT TO RELIEF VALVE (PSIG).
5. CLASS 602 SS PIPE WITH 9.977" ID X 1.025" MINIMUM WALL THICKNESS.
6. ⧫ DENOTES DISSIMILAR METAL WELD.
7. T-DIFFUSER PIPING IS STAINLESS STEEL MATERIAL SA358 CL-1, TP-304L, WITH 12 3/4" O.D. X 1" MIN WALL THICKNESS.
8. ‡‡ DENOTES SUPPLIED BY GE-NED.
9. ALL CLASS 1 PIPING 2" AND SMALLER SHALL HAVE BUTT WELD FITTINGS.
10. VENT AND DRAIN LINES SHALL SLOPE CONTINUOUSLY DOWNWARD.
11. NO FLAG SHOWN ON CORRESPONDING DOCUMENT. COORDINATES PROVIDE INTERFACE LOCATION.

THIS DRAWING WAS PRODUCED ELECTRONICALLY. DO NOT MAKE ANY CHANGES MANUALLY.

LR NOTE:
PLEASE REFER TO DRAWING LR-000 SHEETS 2A THROUGH 2F FOR LR BOUNDARY DRAWING NOTES, SYMBOLS, AND ACRONYMS.

SAFETY RELATED

(REF. SAR FIG. 10.1-3d & ISPT-1D)

Constellation Energy Group

NINE MILE POINT NUCLEAR STATION UNIT 2 - SCRIBA, N.Y.

PIPING & INSTRUMENTATION DIAGRAM
MAIN STEAM

SCALE NONE | DRAWING NO LR-1D-0

MF	REV	DATE	DESCRIPTION OF REVISION	M.O.	DFT	DES	CHKD	ENG	ELEC	MECH	STR	MF	REV	DATE	DESCRIPTION OF REVISION	M.O.	DFT	DES	CHKD	ENG	ELEC	MECH	STR	MF	REV	DATE	DESCRIPTION OF REVISION	M.O.	DFT	DES	CHKD	ENG	ELEC	MECH	STR

...\LR-001_d.dgn 5/14/2004 9:45:08 AM

D-103