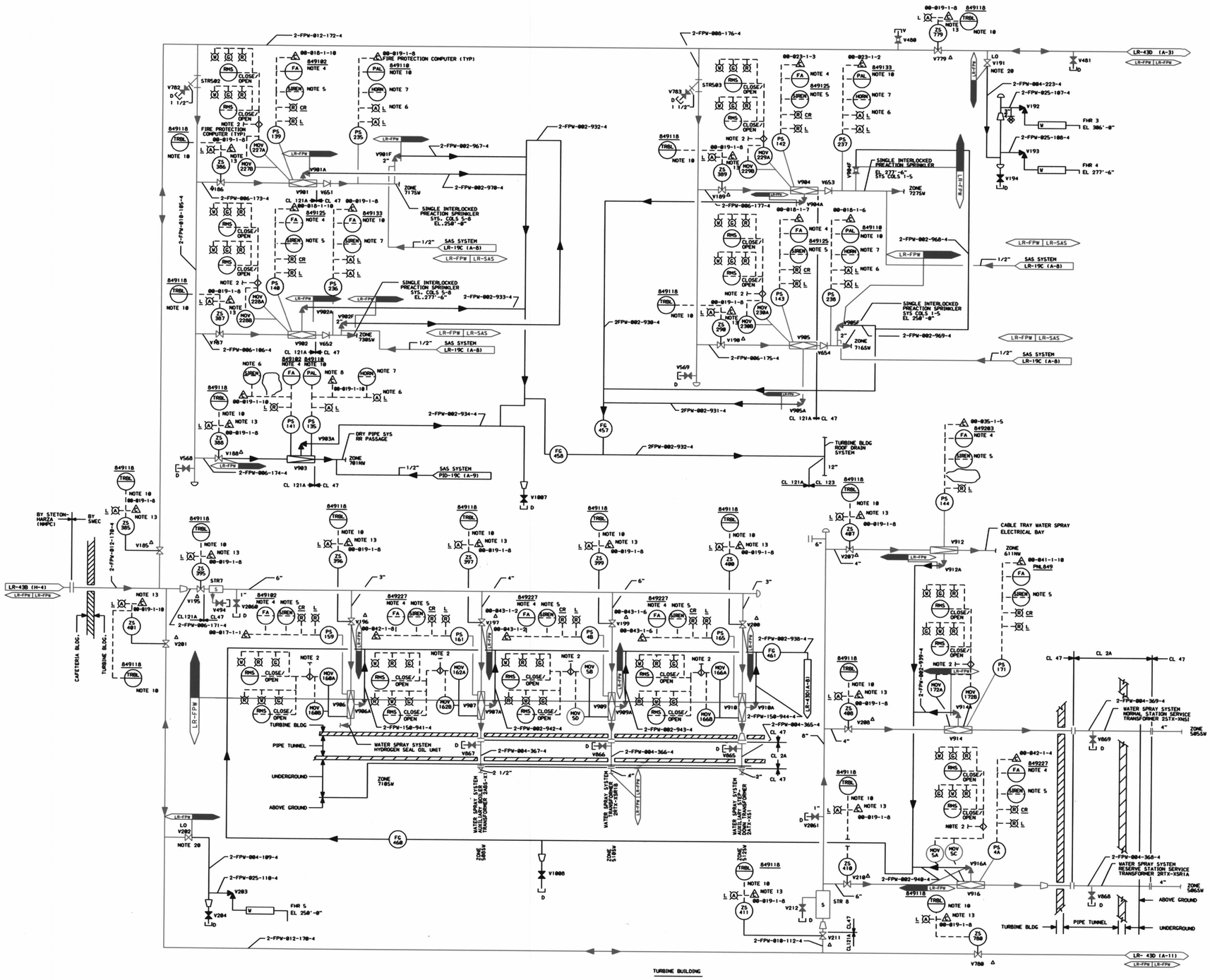

MARK NUMBER	VALVE DESCRIPTION	SIZE	NO. OF VALVES
V185,281,779,780	VGF015-BC-4R	12"	4
V186,187,188 V189,190	VGF015-BC-4F	6"	5
V191,202	VGF015-BD-4R	4"	2
V192,193,203	VAT017-A-4	2-1/2"	3
V194,284,481 V568,569,865 V866,867,868 V869	VGT017-E-4	3/4"	10
V195	VGF015-BC-4R	6"	1
V196,197,199,200 V287,288,218,212 V494,651,652,653 V654,981,981A,981F V982,982A,982F,983 V983A,984,984A V984F,985,985A V985F,986,986A,987 V987A,988,989A V910,910A,912 V912A,914,914A V916,916A V2060,2061	SUPPLIED BY CONTRACTOR SPEC P402C		43
V211	VGF015-BC-4R	18"	1
V480	VGT030-A-4	3/4"	1
V782,783	VGT017-E-4	1-1/2"	2
V1007,1008	VG5060-C-4	3/4"	2

ASSOCIATED EQUIPMENT MARK NUMBERS			
VALVE NO.	VALVE TYPE	PRESSURE SWITCH	ACTUATION
981	DELUGE	PS 139	MOV227A,B
982	DELUGE	PS 140	MOV228A,B
983	DRY PIPE	PS 141	
984	DELUGE	PS 142	MOV229A,B
985	DELUGE	PS 143	MOV230A,B
986	DELUGE	PS 159	MOV160A,B
987	DELUGE	PS 161	MOV162A,B
989	DELUGE	PS 48	MOV58,D
910	DELUGE	PS 165	MOV166A,B
912	ALARM CHECK	PS 144	
914	DELUGE	PS 171	MOV172A,B
916	DELUGE	PS 4A	MOV5A,C
VALVE NO.	LOW AIR PRESS SWITCH		
981	PS 235		
982	PS 236		
983	PS 135		
984	PS 237		
985	PS 238		

NOTES:
1. ALL INSTRUMENT & EQUIPMENT NUMBERS TO BE PREFIXED WITH "2FPW", EXCEPT WHERE A DIFFERENT PREFIX IS SHOWN.
2. INPUT FROM ANY SINGLE HEAT DETECTOR FROM ASSOCIATED ZONE.
3. LOCAL VENT AND DRAIN CONNECTIONS ARE 3/4".
4. COMMON FIRE ANNUNCIATOR AT PB49 FOR EACH LOCAL PANEL.
5. COMMON FIRE SIREN FOR EACH LOCAL PANEL.
6. COMMON SUPERVISORY TROUBLE STATUS LIGHT FOR EACH LOCAL PANEL.
7. COMMON SUPERVISORY TROUBLE HORN FOR EACH LOCAL PANEL.
8. COMMON SUPERVISORY TROUBLE COMPUTER INPUT FOR EACH PANEL.
9. INPUT FROM ANY SINGLE SMOKE DETECTOR IN ASSOCIATED ZONE.
10. COMMON SUPERVISORY TROUBLE ANNUNCIATOR AT PB49 FOR EACH LOCAL PANEL.
11. COMMON FIRE ALARM STATUS LIGHT FOR EACH LOCAL PANEL.
12. COMPUTER GENERATED ALARM
13. COMMON FIRE COMPUTER INPUT FOR ALL SUPERVISED MANUAL VALVES ASSOCIATED WITH THE LOCAL PANEL.
14. WHERE POSSIBLE, ALL VALVES ARE UNDERWRITER'S LABORATORIES INC. LISTED.
15. VALVES MARKED (A) ARE PROVIDED WITH POSITION SWITCHES TO SUPV. FULL OPEN.
16. ALL PIPING IS CL 121A EXCEPT AS OTHERWISE NOTED.
17. ALL HOSE STATIONS HAVE 2-1/2" X 1-1/2" HOSE REDUCERS AFTER ANGLE VALVES TO ACCEPT THE 1-1/2" HOSE STATION.
18. LOCAL VENT AND DRAIN CONNECTIONS ARE 3/4" EXCEPT WHERE NOTED OTHERWISE.
19. ANGLE DRAIN VALVES ARE INCLUDED IN MANUFACTURERS DELUGE, ALARM CHECK OR DRY PIPE VALVE TRIM PACKAGE.
20. BREAK AWAY LOCKS ARE USED ON THESE VALVES AND NOT HARD CORE LOCKS.

THIS DRAWING WAS PRODUCED ELECTRONICALLY; DO NOT MAKE ANY CHANGES MANUALLY.

LR NOTE:
PLEASE REFER TO DRAWING LR-000 SHEETS 2A THROUGH 2F FOR LR BOUNDARY DRAWING NOTES, SYMBOLS, AND ACRONYMS.

QUALITY RELATED
NON-SAFETY RELATED
SAR FIGURE 9.5-1c

Constellation Energy Group
NINE MILE POINT NUCLEAR STATION
UNIT 2 - SCRIBA, N.Y.

PIPING & INSTRUMENTATION DIAGRAM
FIRE PROTECTION-WATER

SCALE NONE | DRAWING NO LR-43C-0

MF	REV	DATE	DESCRIPTION OF REVISION	M.O.	DFT	DES	CHKD	ENG	ELEC	MECH	STR

...\LR-043_c.DGN 5/14/2004 1:09:57 PM

168