LR-37B-0

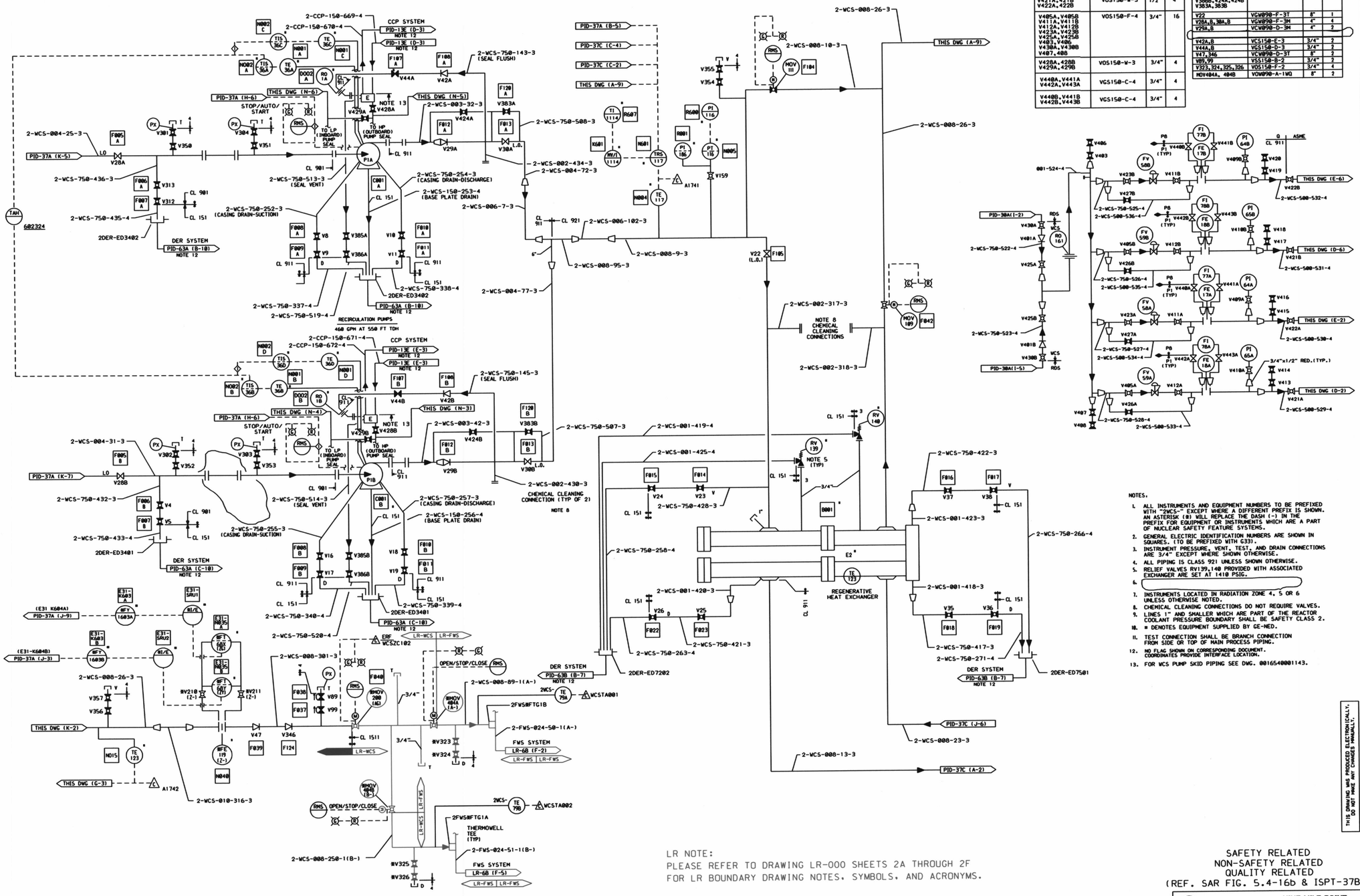

MARK NUMBER	VALVE DESCRIPTION	SIZE	NO. OF VALVES
V401A,401B	VCS150-E-4	3/4"	2
V413,414 V415,416 V417,418 V419,420	VOS150-F-4	1/2"	8
V409A,409B V410A,410B V426A,426B V427A,427B	VOS150-F-2	1/2"	8
V421A,421B V422A,422B	VOS150-W-3	1/2"	4
V405A,V405B V411A,V411B V412A,V412B V423A,V423B V425A,V425B V403,V406 V438A,V438B V407,408	VOS150-F-4	3/4"	16
V428A,429B V429A,429B	VOS150-W-3	3/4"	4
V440A,V441A V442A,V443A	VGS150-C-4	3/4"	4
V440B,V441B V442B,V443B	VGS150-C-4	3/4"	4

MARK NUMBER	VALVE DESCRIPTION	SIZE	NO. OF VALVES
HOV109,111	VOW090-C-3TQ	8"	2
HOV200	VOW090-C-1ZQ	8"	1
V4,5,8,9,10,11,16,17 V18,19,23,24,25,26 V35,36,37,38 ,150,218,211 V301,302 V303,304,312,313 V350,351,352,353 V354,355,356,357 V385A,385B,386A V386B,424A,424B V383A,383B	VOS150-F-3	3/4"	43
V22	VGW090-F-3T	8"	1
V28A,B,38A,B	VGW090-F-3M	4"	4
V29A,B	VCW090-D-3M	4"	2
V42A,B	VCS150-E-3	3/4"	2
V44A,B	VGS150-D-3	3/4"	2
V47,346	VCW090-D-3T	8"	2
V89,99	VS150-B-2	3/4"	2
V323,324,325,326	VOS150-F-2	3/4"	4
HOV404A, 404B	VOW090-A-1WQ	8"	2

NOTES:

1. ALL INSTRUMENTS AND EQUIPMENT NUMBERS TO BE PREFIXED WITH "2WCS-" EXCEPT WHERE A DIFFERENT PREFIX IS SHOWN. AN ASTERISK (*) WILL REPLACE THE DASH (-) IN THE PREFIX FOR EQUIPMENT OR INSTRUMENTS WHICH ARE A PART OF NUCLEAR SAFETY FEATURE SYSTEMS.
2. GENERAL ELECTRIC IDENTIFICATION NUMBERS ARE SHOWN IN SQUARES. (TO BE PREFIXED WITH G33).
3. INSTRUMENT PRESSURE, VENT, TEST, AND DRAIN CONNECTIONS ARE 3/4" EXCEPT WHERE SHOWN OTHERWISE.
4. ALL PIPING IS CLASS 921 UNLESS SHOWN OTHERWISE.
5. RELIEF VALVES RV139,140 PROVIDED WITH ASSOCIATED EXCHANGER ARE SET AT 1410 PSIG.
6.
7. INSTRUMENTS LOCATED IN RADIATION ZONE 4, 5 OR 6 UNLESS OTHERWISE NOTED.
8. CHEMICAL CLEANING CONNECTIONS DO NOT REQUIRE VALVES.
9. LINES 1" AND SMALLER WHICH ARE PART OF THE REACTOR COOLANT PRESSURE BOUNDARY SHALL BE SAFETY CLASS 2.
10. * DENOTES EQUIPMENT SUPPLIED BY GE-NED.
11. TEST CONNECTION SHALL BE BRANCH CONNECTION FROM SIDE OR TOP OF MAIN PROCESS PIPING.
12. NO FLAG SHOWN ON CORRESPONDING DOCUMENT. COORDINATES PROVIDE INTERFACE LOCATION.
13. FOR WCS PUMP SKID PIPING SEE DWG. 0016540001143.

LR NOTE:
PLEASE REFER TO DRAWING LR-000 SHEETS 2A THROUGH 2F
FOR LR BOUNDARY DRAWING NOTES, SYMBOLS, AND ACRONYMS.

THIS DRAWING WAS PRODUCED ELECTRONICALLY, DO NOT MAKE ANY CHANGES MANUALLY.

SAFETY RELATED
NON-SAFETY RELATED
QUALITY RELATED
(REF. SAR FIG. 5.4-16b & ISPT-37B)

Constellation Energy Group

NINE MILE POINT NUCLEAR STATION
UNIT 2 - SCRIBA, N.Y.

PIPING & INSTRUMENTATION DIAGRAM
REACTOR WATER CLEANUP SYSTEM

SCALE NONE | DRAWING NO LR-37B-0

NF	REV	DATE	DESCRIPTION OF REVISION	M.O.	DFT	DES	CHKD	ENG	ELEC	MECH	STR

...\LR-037_b.dgn 5/14/2004 12:48:12 PM

162