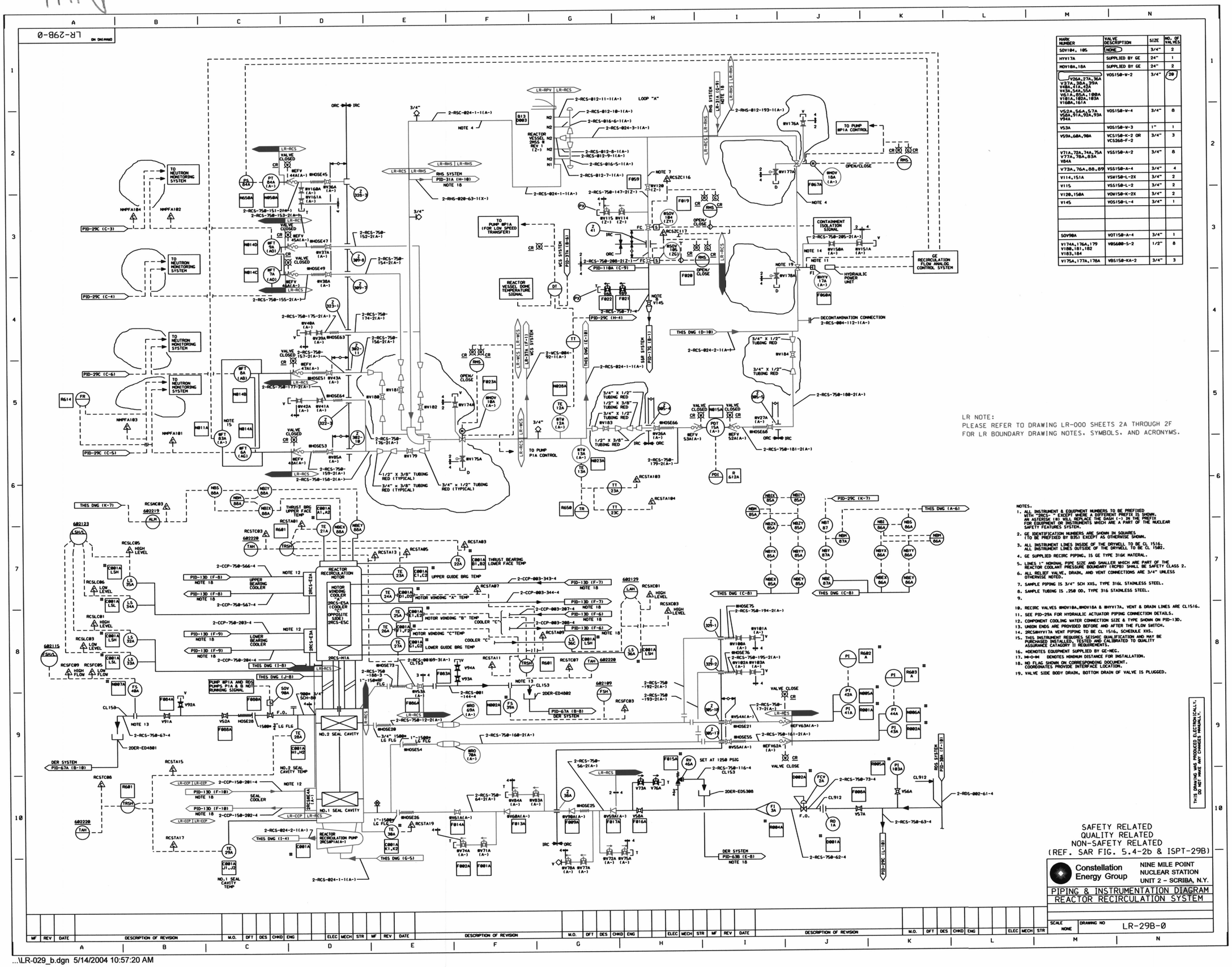


| MARK NUMBER | VALVE DESCRIPTION | SIZE | NO. OF VALVES |
|---|---|---|---|
| SOV104, 105 | NONE | 3/4" | 2 |
| HYV17A | SUPPLIED BY GE | 24" | 1 |
| HOV18A,18A | SUPPLIED BY GE | 24" | 2 |
| V26A,27A,36A V37A,38A,39A V48A,41A,42A V43A,54A,55A V61A,85A,180A V181A,182A,183A V168A,161A | VO5150-W-2 | 3/4" | 20 |
| V52A,56A,57A V58A,91A,92A,93A V94A | VO5150-W-4 | 3/4" | 8 |
| V53A | VO5150-W-3 | 1" | 1 |
| V59A,60A,98A | VC5150-K-2 OR VC5260-F-2 | 3/4" | 3 |
| V71A,72A,74A,75A V77A,78A,83A V84A | VS5150-A-2 | 3/4" | 8 |
| V73A,76A,88,89 | VS5150-A-4 | 3/4" | 4 |
| V114,151A | VSW150-L-2X | 3/4" | 2 |
| V115 | VS5150-L-2 | 3/4" | 2 |
| V120,150A | VOW150-K-2X | 3/4" | 2 |
| V145 | VO5150-L-4 | 3/4" | 1 |
| | | | |
| | | | |
| SOV98A | VOT150-A-4 | 3/4" | 1 |
| V174A,176A,179 V180,181,182 V183,184 | VBS600-S-2 | 1/2" | 8 |
| V175A,177A,178A | VBS150-KA-2 | 3/4" | 3 |

LR NOTE:
PLEASE REFER TO DRAWING LR-000 SHEETS 2A THROUGH 2F FOR LR BOUNDARY DRAWING NOTES, SYMBOLS, AND ACRONYMS.

NOTES:

1. ALL INSTRUMENT & EQUIPMENT NUMBERS TO BE PREFIXED WITH "29RCS- " EXCEPT WHERE A DIFFERENT PREFIX IS SHOWN. AN ASTERISK (*) WILL REPLACE THE DASH (-) IN THE PREFIX FOR EQUIPMENT OR INSTRUMENTS WHICH ARE A PART OF THE NUCLEAR SAFETY FEATURES SYSTEM.
2. GE IDENTIFICATION NUMBERS ARE SHOWN IN SQUARES (TO BE PREFIXED BY B35) EXCEPT AS OTHERWISE SHOWN.
3. ALL INSTRUMENT LINES INSIDE OF THE DRYWELL TO BE CL 1516; ALL INSTRUMENT LINES OUTSIDE OF THE DRYWELL TO BE CL 1502.
4. GE SUPPLIED RECIRC PIPING. IS GE TYPE 316K MATERAL.
5. LINES 1" NOMINAL PIPE SIZE AND SMALLER WHICH ARE PART OF THE REACTOR COOLANT PRESSURE BOUNDARY (RCPB) SHALL BE SAFETY CLASS 2.
6. ALL RELIEF VALVE, DRAIN, AND VENT CONNECTIONS ARE 3/4" UNLESS OTHERWISE NOTED.
7. SAMPLE PIPING IS 3/4" SCH XXS, TYPE 316L STAINLESS STEEL.
8. SAMPLE TUBING IS .250 OD, TYPE 316 STAINLESS STEEL.
9.
10. RECIRC VALVES 8HOV18A,8HOV18A & 8HYV17A, VENT & DRAIN LINES ARE CL1516.
11. SEE PID-29A FOR HYDRAULIC ACTUATOR PIPING CONNECTION DETAILS.
12. COMPONENT COOLING WATER CONNECTION SIZE & TYPE SHOWN ON PID-13D.
13. UNION ENDS ARE PROVIDED BEFORE AND AFTER THE FLOW SWITCH.
14. 2RCS8HYV17A VENT PIPING TO BE CL 1516, SCHEDULE XXS.
15. THIS INSTRUMENT REQUIRES SEISMIC QUALIFICATION AND MAY BE PURCHASED INSTALLED, TESTED AND CALIBRATED TO QUALITY ASSURANCE CATAGORY II REQUIREMENTS.
16. ◆DENOTES EQUIPMENT SUPPLIED BY GE-NEG.
17. M-O-M DENOTES MINIMUM DISTANCE FOR INSTALLATION.
18. NO FLAG SHOWN ON CORRESPONDING DOCUMENT. COORDINATES PROVIDE INTERFACE LOCATION.
19. VALVE SIDE BODY DRAIN. BOTTOM DRAIN OF VALVE IS PLUGGED.

THIS DRAWING WAS PRODUCED ELECTRONICALLY. DO NOT MODIFY AND CHANGES MANUALLY.

SAFETY RELATED
QUALITY RELATED
NON-SAFETY RELATED
(REF. SAR FIG. 5.4-2b & ISPT-29B)

Constellation Energy Group

NINE MILE POINT NUCLEAR STATION UNIT 2 - SCRIBA, N.Y.

PIPING & INSTRUMENTATION DIAGRAM
REACTOR RECIRCULATION SYSTEM

SCALE: NONE | DRAWING NO: LR-29B-0

| MF | REV | DATE | DESCRIPTION OF REVISION | M.O. | DFT | DES | CHKD | ENG | ELEC | MECH | STR |
|---|---|---|---|---|---|---|---|---|---|---|---|

...\LR-029_b.dgn 5/14/2004 10:57:20 AM