DRAWING NUMBER LR-26939-C
SHEET NUMBER

LR NOTE:
PLEASE REFER TO DRAWING LR-18000-C SHEETS 1 AND 2 FOR LR BOUNDARY DRAWING NOTES, SYMBOLS, AND ACRONYMS.

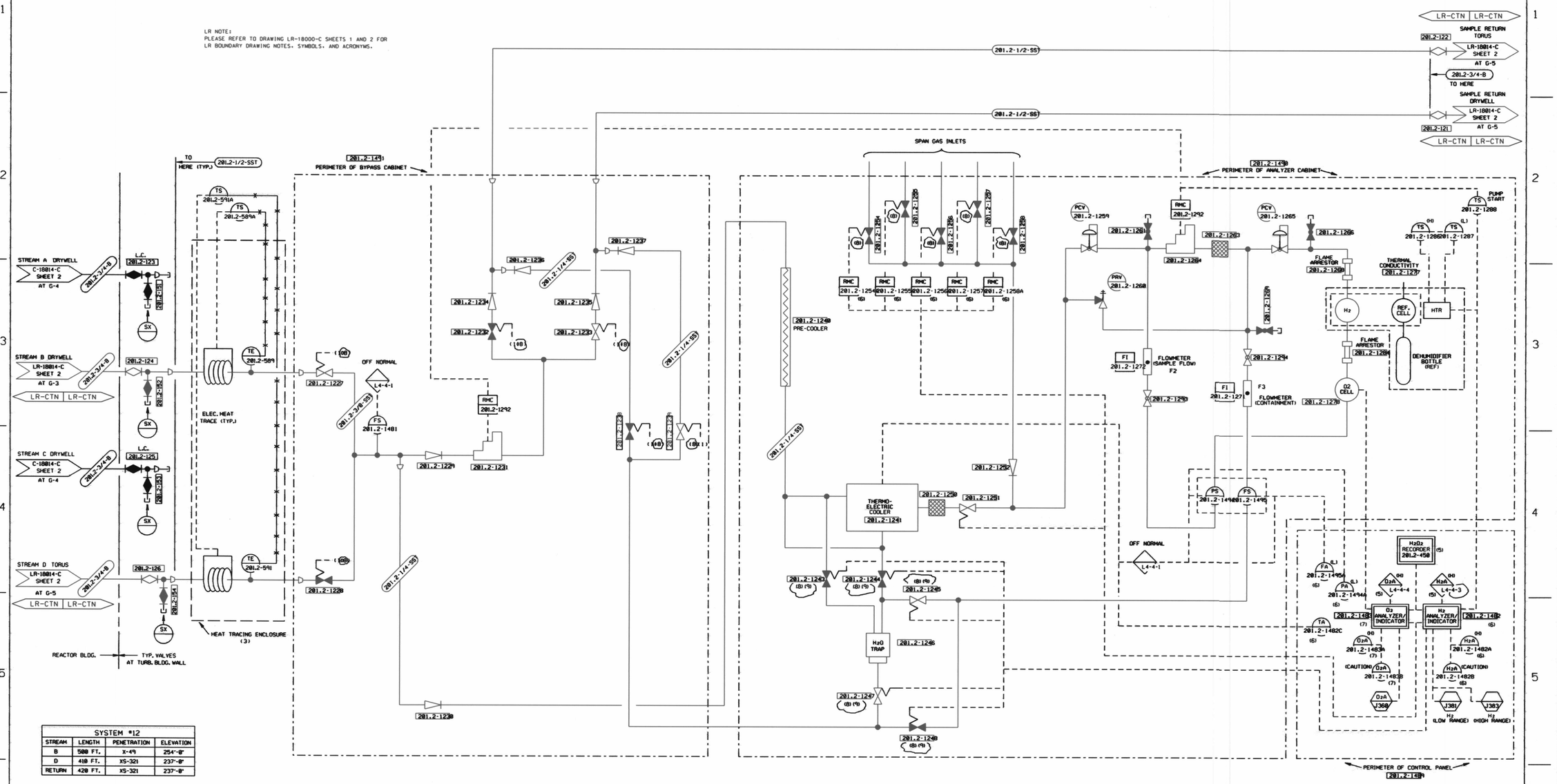

SYSTEM #12			
STREAM	LENGTH	PENETRATION	ELEVATION
B	500 FT.	X-49	254'-0"
D	410 FT.	XS-321	237'-0"
RETURN	420 FT.	XS-321	237'-0"

NOTE:

(1) TO STREAM SELECTOR
(2) FOR PIPING SYMBOLS SEE DWG. C-18000-C
(3) SUPPLIED BY NMPC
(4) NOT USED
(5) LOCATED IN MAIN CONTROL ROOM ("L" PANEL)
(6) LOCATED IN HYDROGEN MODULE
(7) LOCATED IN OXYGEN MODULE
(8) SOVs FAIL CLOSED WHEN DE-ENERGIZED.
(9) WATER PURGE VALVES ARE SHOWN IN THE "PURGE" POSITION. THEY ARE NORMALLY IN THE OPPOSITE POSITION.

NOTE: THIS DRAWING WAS CREATED USING COMPUTER AIDED DRAFTING
DO NOT MAKE MANUAL CHANGES

CONSTELLATION ENERGY GROUP

STA: NINE MILE POINT NUCLEAR STATION UNIT NO. 1
ACC NO

PRIMARY CONTAINMENT ATMOSPHERE
H2-O2 MONITOR SYSTEM #12
P & I DIAGRAM

DES	DR	DR CK	SCALE	DWG NO	INDEX	SH	REV
MF			NONE	LR-26939-C	3-N2.1-S18.9		0

...\LR-26939-C_000.dgn 5/17/2004 7:33:25 AM

D083