8218

LR-13D-0

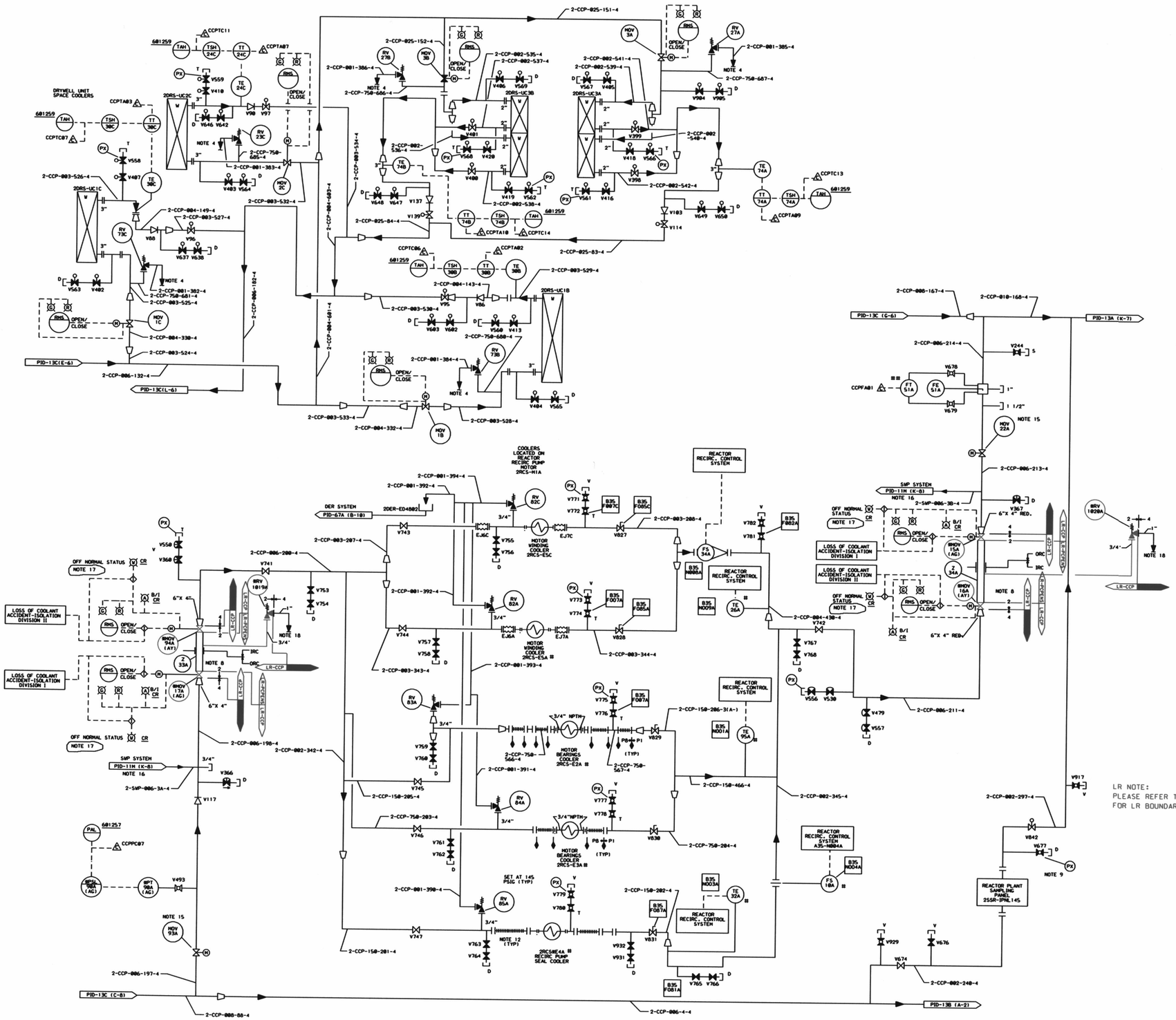

MARK NUMBER	VALVE DESCRIPTION	SIZE	NO. OF VALVES
MOV1B,1C	VGW015-Q-4KQ	4"	2
MOV2C	VGW015-Q-4KQ	3"	1
MOV3A,3B	VGW015-Q-4KQ	2-1/2"	2
MOV15A,16A MOV17A,94A	VGW015-P-2KQ	4"	4
MOV22A,93A	VGW015-P-3ZQ	6"	2
V86,88	VCW015-H-4K	4"	2
V98	VCW015-H-4K	3"	1
V95,96,97	VBW015-CF-4K	3"	3
V183,137	VCW015-H-4K	2-1/2"	2
V114,139	VBW015-CF-4K	2-1/2"	2
V117	VCW015-E-3K	6"	1
V244,677,917,929	VOS060-D-4	3/4"	4
V360,366,367 V479,530,550 V556,557	VSS060-D-3	3/4"	8
V398,399,400 V481,842	VBS015-CB-4	2"	5
V482,483,484 V485,486,487 V410,413,416 V418,419,420 V550,559,560 V561,562,563 V564,565,566 V567,568,569 V682,683,637 V638,642,646 V647,648,649 V650,904,905	VBS015-CA-4	3/4"	36
V493,771,772 V773,774,775 V776,777,778 V779,780,781 V782	VOS060-D-3	3/4"	13
V674	VGS050-C-4	2"	1
V676	VGS060-C-4	3/4"	1
V678,679	BY ANNUBAR MFR.	N/A	2
V741,742	VGW015-P-3K	6"	2
V743,744	VGW015-P-3K	3"	2
V745,747	VGS060-C-3	1-1/2"	2
V746,753,754,755 V756,757,758 V759,760,761 V762,763,764 V765,766,767 V768,931,932	VGS060-C-3	3/4"	19
V827,828	VPW015-GA-3K	3"	2
V829,831	VPS015-G-3	1 1/2"	2
V830	VPS015-G-3	3/4"	1

NOTES:

1. ALL INSTRUMENTS AND EQUIPMENT NUMBERS TO BE PREFIXED WITH "2CCP-" EXCEPT WHERE A DIFFERENT PREFIX IS SHOWN. AN ASTERISK (#) WILL REPLACE THE DASH (-) IN THE PREFIX FOR EQUIPMENT OR INSTRUMENTS WHICH ARE A PART OF NUCLEAR SAFETY FEATURES SYSTEM.
2. G.E. IDENTIFICATION NUMBERS ARE SHOWN IN SQUARES.
3. ALL PIPING TO BE CLASS 151 UNLESS OTHERWISE NOTED.
4. RELIEF VALVES SET AT 145 PSIG & DISCHARGE TO PLATFORM FLOOR WHERE NOTED.
5. ALL TEMPERATURE CONNECTIONS ARE 1-1/4".SAMPLE CONNECTIONS AND PRESSURE CONNECTIONS ARE 3/4".
6. ALL RELIEF VALVE CONNECTIONS, VENTS AND DRAINS ARE 3/4" UNLESS OTHERWISE NOTED.
7. EQUIPMENT IS SAFETY CLASS 4 WHERE NOTED.
8. CONTAINMENT ISOLATION VALVES INSTALLED ON END OF PENETRATION.
9. SAMPLE PANEL WITH INTERNAL PIPING, VALVES AND INSTRUMENTS SUPPLIED BY SAMPLE COOLER MANUFACTURER.
10. ## DENOTES EQUIPMENT SUPPLIED BY REACTOR RECIRCULATION PUMP AND MOTOR VENDOR.
11. ## DENOTES ANNUBAR AND VALVES BY ANNUBAR MANUFACTURER.
12. HOSE TO HAVE 3" MOVEMENT IN ALL DIRECTIONS WITH A MINIMUM 145 PSIG DSGN PRESS AND 150 DSGN TEMP.
13.
14. SYMBOL ◊ INDICATES DISSIMILAR METAL WELD.
15. VALVE IS NON-FUNCTIONAL. POWER SUPPLY IS DISCONNECTED.
16. NO FLAG SHOWN ON CORRESPONDING DOCUMENT. COORDINATES PROVIDE INTERFACE LOCATION.
17. OFF-NORMAL STATUS DISPLAY SYSTEM IS ABANDONED IN PLACE.
18. RELIEF VALVE IS SET AT 145 PSIG AND DISCHARGES TO THE ATMOSPHERE. VALVE IS STAINLESS STEEL.

LR NOTE:
PLEASE REFER TO DRAWING LR-000 SHEETS 2A THROUGH 2F FOR LR BOUNDARY DRAWING NOTES, SYMBOLS, AND ACRONYMS.

THIS DRAWING WAS PRODUCED ELECTRONICALLY. DO NOT MAKE ANY CHANGES MANUALLY.

SAFETY RELATED
QUALITY RELATED
NON-SAFETY RELATED
(REF. SAR FIG. 9.2-3d & ISPT-13D)

Constellation Energy Group

NINE MILE POINT NUCLEAR STATION UNIT 2 - SCRIBA, N.Y.

PIPING & INSTRUMENTATION DIAGRAM
REACTOR BUILDING CLOSED LOOP COOLING WATER

SCALE NONE | DRAWING NO LR-13D-0

MF	REV	DATE	DESCRIPTION OF REVISION	M.O.	DFT	DES	CHKD	ENG	ELEC	MECH	STR

...\LR-013_d.dgn 5/14/2004 10:22:37 AM