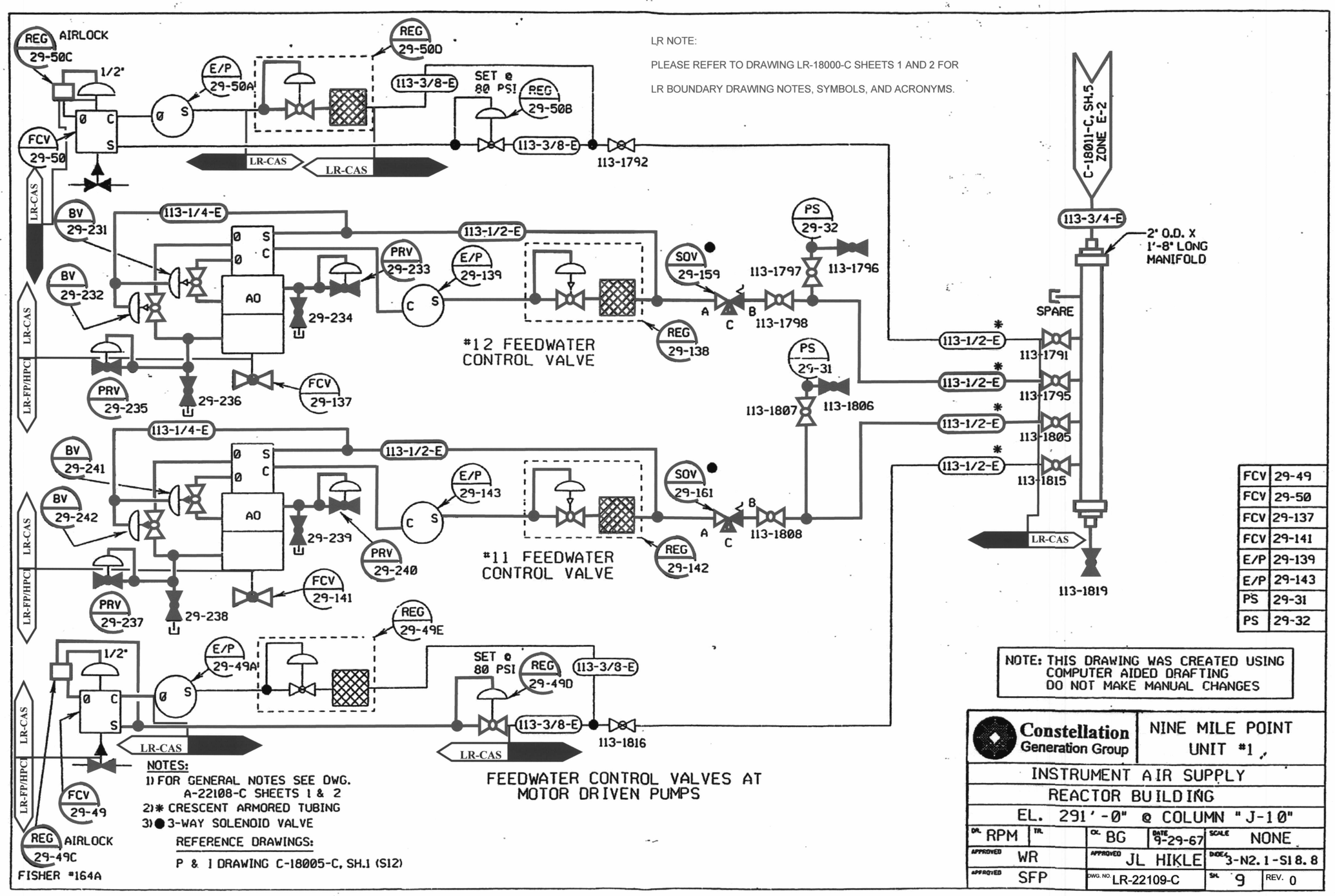

FCV	29-49
FCV	29-50
FCV	29-137
FCV	29-141
E/P	29-139
E/P	29-143
PS	29-31
PS	29-32

D081