LR-13C-0

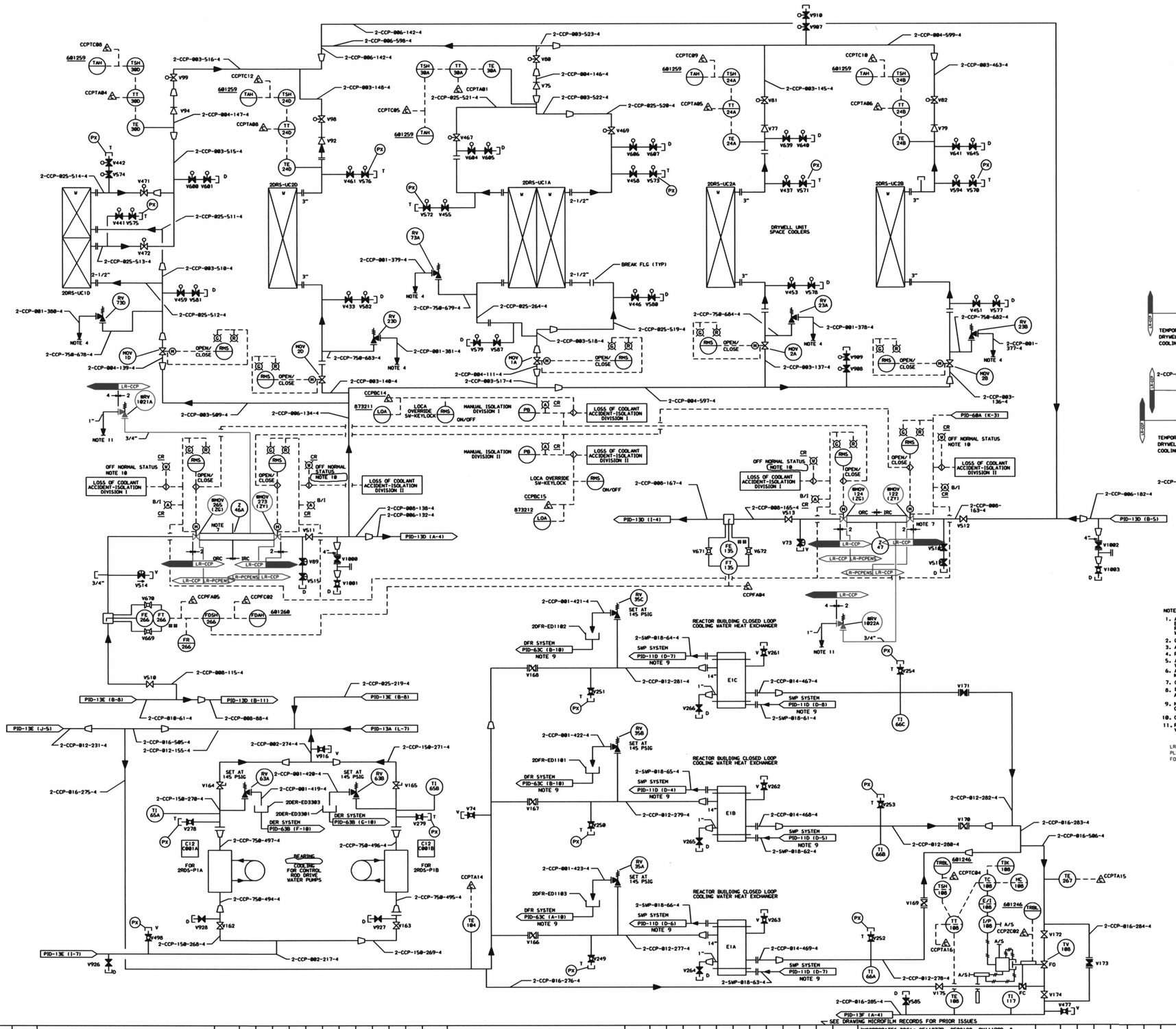

MARK NUMBER	VALVE DESCRIPTION	SIZE	NO. OF VALVES
MOV1A,1D	VGW015-Q-4KQ	4"	2
MOV2A,2B,2D	VGW015-Q-4KQ	3"	3
MOV122,124	VGW015-P-22Q	8"	2
MOV265,273	VGW015-P-2KQ	8"	2
V73, 514 V516,517	VS5060-D-4	3/4"	4
V74,249,250 V251,252,253 V254,261,262 V263,278,279 V477,498,916	VO5060-D-4	3/4"	15
V75,94	VCW015-H-4K	4"	2
V77,79,92	VCW015-H-4K	3"	3
V80,81,82 V90,99	VBW015-CF-4K	3"	5
V162,163	VG5060-C-4	1-1/2"	2
V164,165	VP5015-JB-4	1-1/2"	2
V166,167,168	VV1015-F-4Q	12"	3
V169,170,171	VVF080-F-4RQ	12"	3
V172,174,175	VGW030-C-4K	16"	3
V173	VVF080-F-4RQ	16"	1
V254,265,266 V925,926,927 928	VG5060-C-4	3/4"	7
V433,437,441 V442,446,451 V453,456,458 V459,461,578 V571,572,573 V574,575,576 V577,578,579 V580,581,582 V587,594,600 V601,604,605 V606,607,639 V640,641,645 V987,988,989 V918	VB5015-CA-4	3/4"	40
V467,469,471 V472	VBW015-CF-4K	2-1/2"	4
V510,511,512 V513	VGW015-Q-4K	8"	4
V669,670,671 V672	BY ANNUBAR MFGR	N/A	4
V996, 997, 998, 999	VCW015-A-3	4"	4
V1000, 1002	VVF015-A-4	4"	2
V1001, 1003	VO5060-D-4	1"	2
V1004, 1006, 1012	VO5150-F-2	1/2"	3
V1005, 1007	VO5060-D-3	1"	2
V89, 515	VS5150-D-4	3/4"	2

NOTES.

1. ALL INSTRUMENTS AND EQUIPMENT NUMBERS TO BE PREFIXED WITH "2CCP-" EXCEPT WHERE A DIFFERENT PREFIX IS SHOWN. AN ASTERISK (8) WILL REPLACE THE DASH (-) IN THE PREFIX FOR EQUIPMENT OR INSTRUMENTS WHICH ARE A PART OF NUCLEAR SAFETY FEATURES SYSTEM.
2. G.E. IDENTIFICATION NUMBERS ARE SHOWN IN SQUARES.
3. ALL PIPING TO BE CLASS 151 UNLESS OTHERWISE NOTED.
4. RELIEF VALVES SET AT 145 PSIG & DISCH TO PLATFORM FLOOR WHERE NOTED.
5. ALL TEMPERATURE CONNECTIONS ARE 1-1/4", SAMPLE CONNECTIONS, VENT, DRAIN CONN AND PRESSURE CONNECTIONS ARE 3/4".
6. ALL RELIEF VALVE CONNECTIONS ARE 3/4" UNLESS OTHERWISE NOTED.
7. CONTAINMENT ISOLATION VALVES INSTALLED ON END OF PENETRATION.
8. ## DENOTES ANNUBAR PIPING AND VALVES BY ANNUBAR MANUFACTURER.
9. NO FLAG SHOWN ON CORRESPONDING DOCUMENT. COORDINATES PROVIDE INTERFACE LOCATION.
10. OFF NORMAL STATUS DISPLAY SYSTEM IS ABANDONED IN PLACE.
11. RELIEF VALVES IS SET AT 145 PSIG AND DISCHARGES TO THE ATOMSPHERE. VALVE IS STAINLESS STEEL.

LR NOTE:
PLEASE REFER TO DRAWING LR-000 SHEETS 2A THROUGH 2F FOR LR BOUNDARY DRAWING NOTES, SYMBOLS, AND ACRONYMS.

THIS DRAWING WAS PRODUCED ELECTRONICALLY. DO NOT MAKE ANY CHANGES MANUALLY.

QUALITY RELATED
SAFETY RELATED
NON-SAFETY RELATED

(REF. SAR FIG. 9.2-3c & ISPT-13C)

Constellation Energy Group
NINE MILE POINT NUCLEAR STATION UNIT 2 - SCRIBA, N.Y.

PIPING & INSTRUMENTATION DIAGRAM
REACTOR BUILDING
CLOSED LOOP COOLING WATER

SCALE NONE | DRAWING NO LR-13C-0

NF	REV	DATE	DESCRIPTION OF REVISION	M.O.	DFT	DES	CHKD	ENG	ELEC	MECH	STR
	9	5-3-95	INCORPORATED EDC#2M00517B, 2M00518C, 2M00533A. REF. SDC#SC2-0107-94		SP	RMK	K.JP			NSK	K.JP FOR RKO
	11		REVISED PER CONFIG CHANGE 2M11803 AND AR 42876 FOR FSAR UPDATE	M.O.	DFT	DES	CHKD	ENG	ELEC	MECH	STR
	10		INCORPORATES DDC's 2E11077B, 2F02120, 2M11190D, & 2M11191C	M.O.	DFT	DES	CHKD	ENG	ELEC	MECH	STR

...\LR-013_c.dgn 5/14/2004 10:20:29 AM