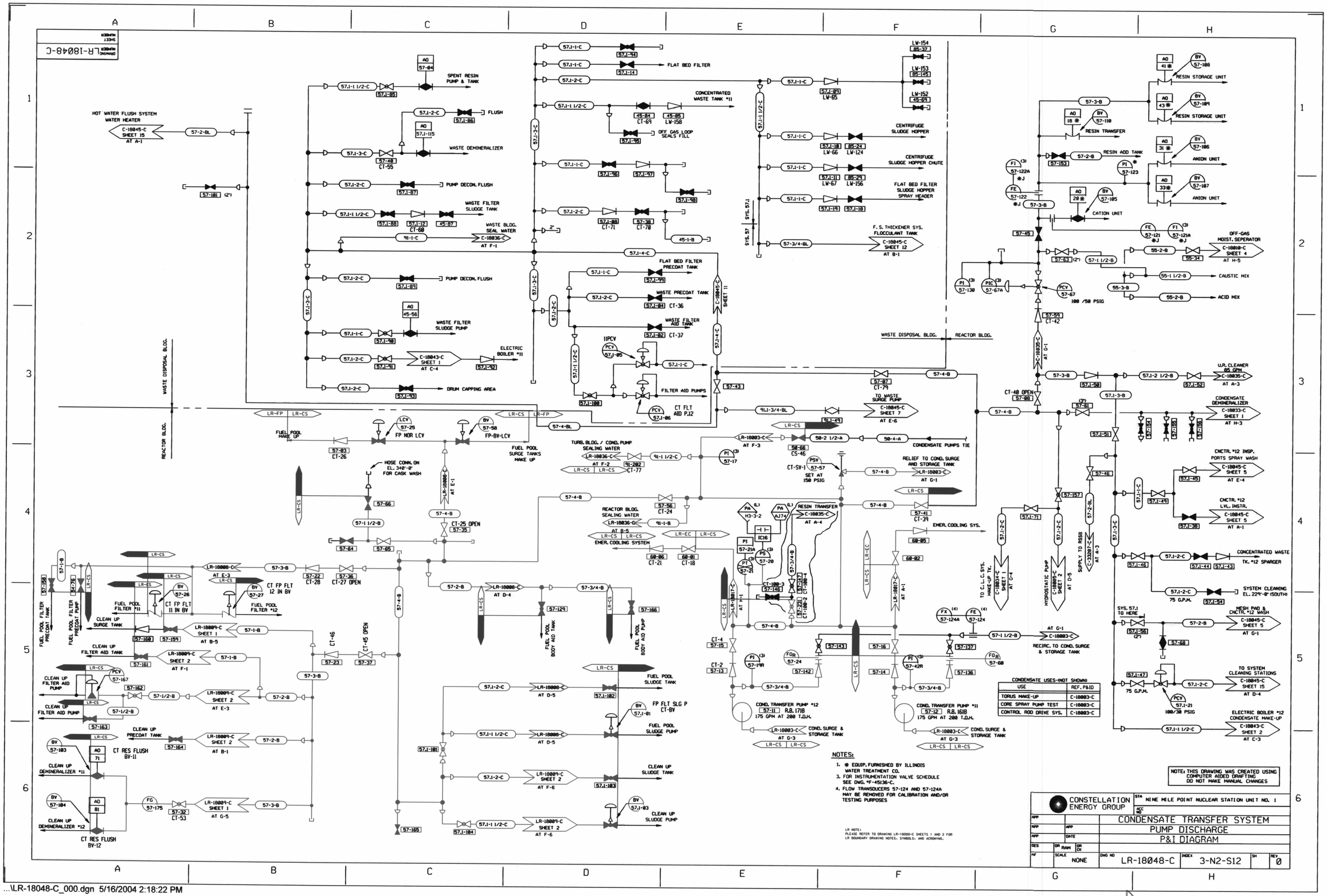

...\LR-18048-C_000.dgn 5/16/2004 2:18:22 PM

D079