5219

LR-13A-0

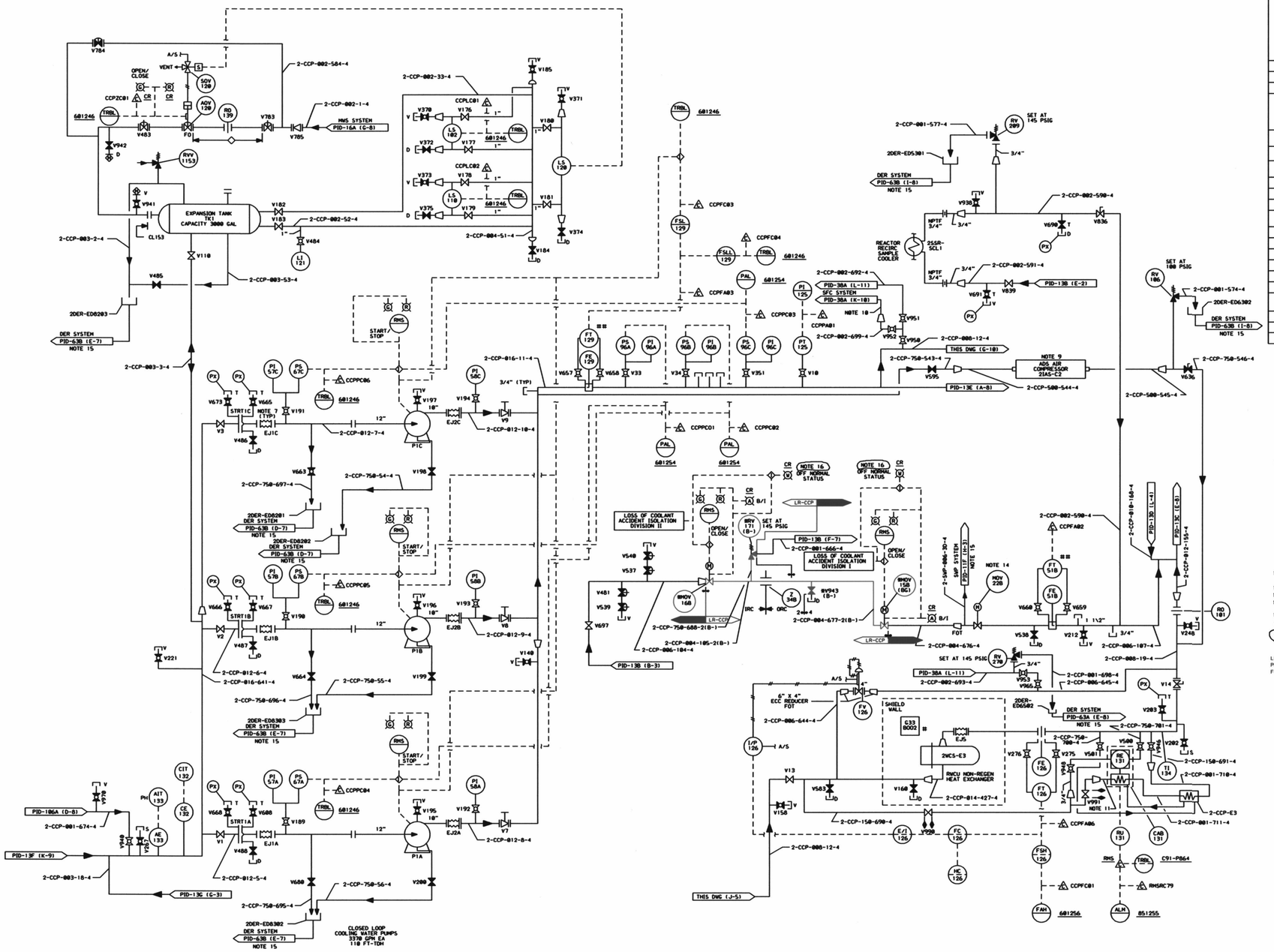

MARK NUMBER	VALVE DESCRIPTION	SIZE	NO. OF VALVES
AOV120	VDS015-FC-4Q	2"	1
MOV15B,16B	VGW015-P-2KQ	4"	2
MOV22B	VGW015-P-32Q	6"	1
V1,2,3	VGW015-Q-4K	12"	3
V7,8,9	VKF000-F-4RQ	12"	3
V10,33,34,140 V154,186,189 V190,191,192 V193,194,195 V196,197,202 V203,217,221 V240,263,275 V276,357,378 V371,373,500 V541,600,663 V665,666,667 V668,673,681 V938,941,948 V970	VDS060-D-4	3/4"	41
V13	VGW015-Q-4K	8"	1
V14	VPF015-GA-4R	8"	1
V110,485	VGW015-Q-4K	3"	2
V160,184,198 V199,200,372 V374,375,538 V583,596,664 V680,698	VGS060-C-4	3/4"	14
V176,177,178 V179,180,181	VGS060-C-4	1"	6
V182,183,484 V487,488,839	VGS060-C-4	2"	6
V481,537,539 V540	VSS060-D-3	3/4"	4
V483,783,784	VDS015-FC-4	2"	3
V484	VGS060-C-4	1"	1
V636	VPS015-JB-4	3/4"	1
V657,658,659 V660	BY ANNUBAR MANUFACTURER	N/A	4
V697	VGW015-P-3K	6"	1
V785	VCF015-B-4R	2"	1
V836	VPS015-JB-4	2"	1
V940	VOS060-D-4	1"	1
V943	VGS060-C-2	3/4"	1
V946	VOS060-D-4	1 1/2"	1
V950,951,952 V953,965	VOS060-D-4	2"	5
V942	VGS060-D-4	3/4"	1
V990	VGS060-D-2	1 1/2"	1
V991	VGS060-D-4	1 1/2"	1

NOTES:

1. ALL INSTRUMENTS AND EQUIPMENT NUMBERS TO BE PREFIXED WITH "2CCP-" EXCEPT WHERE A DIFFERENT PREFIX IS SHOWN. AN ASTERISK (8) WILL REPLACE THE DASH (-) IN THE PREFIX FOR EQUIPMENT OR INSTRUMENTS WHICH ARE A PART OF NUCLEAR SAFETY FEATURES SYSTEM.
2. G.E. IDENTIFICATION NUMBERS ARE SHOWN IN SQUARES.
3. ALL PRESSURE, SAMPLE AND TEST CONNECTIONS ARE 3/4" UNLESS OTHERWISE NOTED. ALL TEMP. CONNECTONS ARE 1-1/4".
4. ALL PIPING TO BE CLASS 151 UNLESS OTHERWISE NOTED.
5. ALL RELIEF VALVES DISCHARGE TO REACTOR BUILDING EQUIPMENT DRAINS, PID-63.
6. ALL RELIEF VALVE, VENTS AND DRAIN CONNECTIONS ARE 3/4" UNLESS OTHERWISE NOTED.
7. PUMP STRAINER BLOWDOWN CONNECTIONS ARE 2".
8. ⊢—⊖—⊣ DENOTES MINIMUM DISTANCE.
9. TEMP MONITORING SHOWN ON PID-19D.
10. TUBING (3/4"OD) FOR PURGE SUPPLY TO RADIATION MONITOR 25FC-CAB142.
11. COOLING WATER CONNECTIONS ARE 1"NPT.
12. # DENOTES EQUIPMENT AND PIPING SUPPLIED BY GE.
13. ## DENOTES ANNUBAR PIPING AND VALVES SUPPLIED BY ANNUBAR MFGR.
14. VALVE IS NON-FUNCTIONAL. POWER SUPPLY IS DISCONNECTED.
15. NO FLAG SHOWN ON CORRESPONDING DOCUMENT. COORDINATES PROVIDE INTERFACE LOCATION.
16. OFF-NORMAL STATUS DISPLAY IS ABANDONED IN PLACE.

LR NOTE:
PLEASE REFER TO DRAWING LR-000 SHEETS 2A THROUGH 2F FOR LR BOUNDARY DRAWING NOTES, SYMBOLS, AND ACRONYMS.

THIS DRAWING WAS PRODUCED ELECTRONICALLY. DO NOT MAKE ANY CHANGES MANUALLY.

QUALITY RELATED
NON SAFETY RELATED
SAFETY RELATED
(REF. SAR FIG. 9.2-3a & ISPT-13A)

Constellation Energy Group

NINE MILE POINT NUCLEAR STATION UNIT 2 - SCRIBA, N.Y.

PIPING & INSTRUMENTATION DIAGRAM
REACTOR BUILDING CLOSED LOOP COOLING WATER

SCALE: NONE
DRAWING NO: LR-13A-0

MF	REV	DATE	DESCRIPTION OF REVISION	M.O.	DFT	DES	CHKD	ENG	ELEC	MECH	STR

...\LR-013_a.dgn 5/14/2004 10:18:42 AM