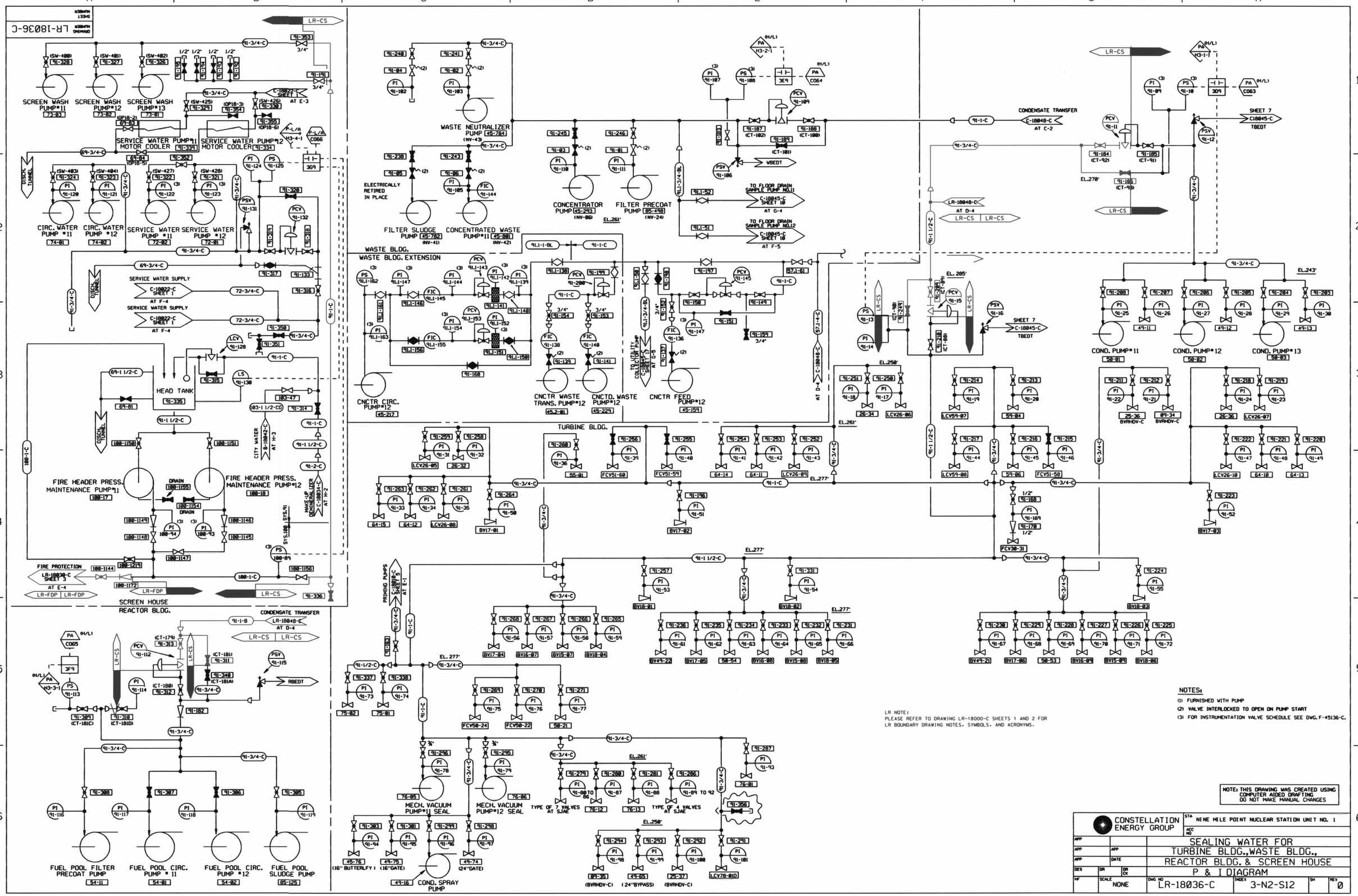

...\LR-18036-C_000.dgn 5/16/2004 1:52:24 PM

D067