DRAWING NUMBER LR-18030-0
SHEET NUMBER 2

FOAM & TURBO. - GENERATOR WATER SPRAY SYSTEMS

SYSTEM NUMBER	AREA COVERED	ZONE NO.
*11 FOAM	TURBINE BUILDING HYDROGEN SEAL OIL ROOM EL.277'-0"	FW-111F
*12 FOAM	COLUMNS 4 TO 6 & B TO C BELOW EL.300', INCLUDING AREA BELOW CONDENSER	FW-101F
*13 FOAM	COLUMNS 6 TO 9 & B TO C BELOW EL.300', INCLUDING AREA BELOW CONDENSER	FW-102F
*14 FOAM	COLUMNS 9 TO 11 & B TO C BELOW EL.300', INCLUDING AREA BELOW CONDENSER	FW-103F
*15 FOAM	COLUMNS 11 TO 14 & B TO C BELOW EL.300', EXCEPT LUBE OIL	FW-109F
*1A WATER SPRAY	OIL PIPING UNDER GENERATOR, HYDROGEN SEAL OIL UNIT, EXCITER & GENERATOR BEARINGS	WD-115F

SYSTEM NUMBER	AREA COVERED	ZONE NO.
*1B WATER SPRAY	TURBINE BEARINGS 6,7,8, & 4 REHEAT STEAM STOP VALVES	WD-116F
*1C WATER SPRAY	TURBINE BEARINGS 1,2,3,4,5 & 2 REHEAT STOP VALVES	WD-117F
*1D WATER SPRAY	OIL PIPING IN AREA BETWEEN COLUMNS 4 TO 6 & B TO C BELOW AREA EL. 300'	WD-101F
*1E WATER SPRAY	OIL PIPING IN AREA BETWEEN COLUMNS 6 TO 9 & B TO C BELOW AREA EL. 300'	WD-102F
*1F WATER SPRAY	OIL PIPING IN AREA BETWEEN COLUMNS 9 TO 11 BELOW AREA EL. 300', INCLUDING 4 MAIN STEAM STOP VALVES	WD-103F
*1G WATER SPRAY	TURBINE HEAD END AREA OIL PIPING, TURBINE OIL RESERVOIR, DISCONNECT CLUTCH, REDUCING GEAR AND FEED WATER PUMP	WD-109F
	COLUMNS 13 TO 14 & B_B TO B_D - TURBINE LUBE OIL ROOM	FW-113F

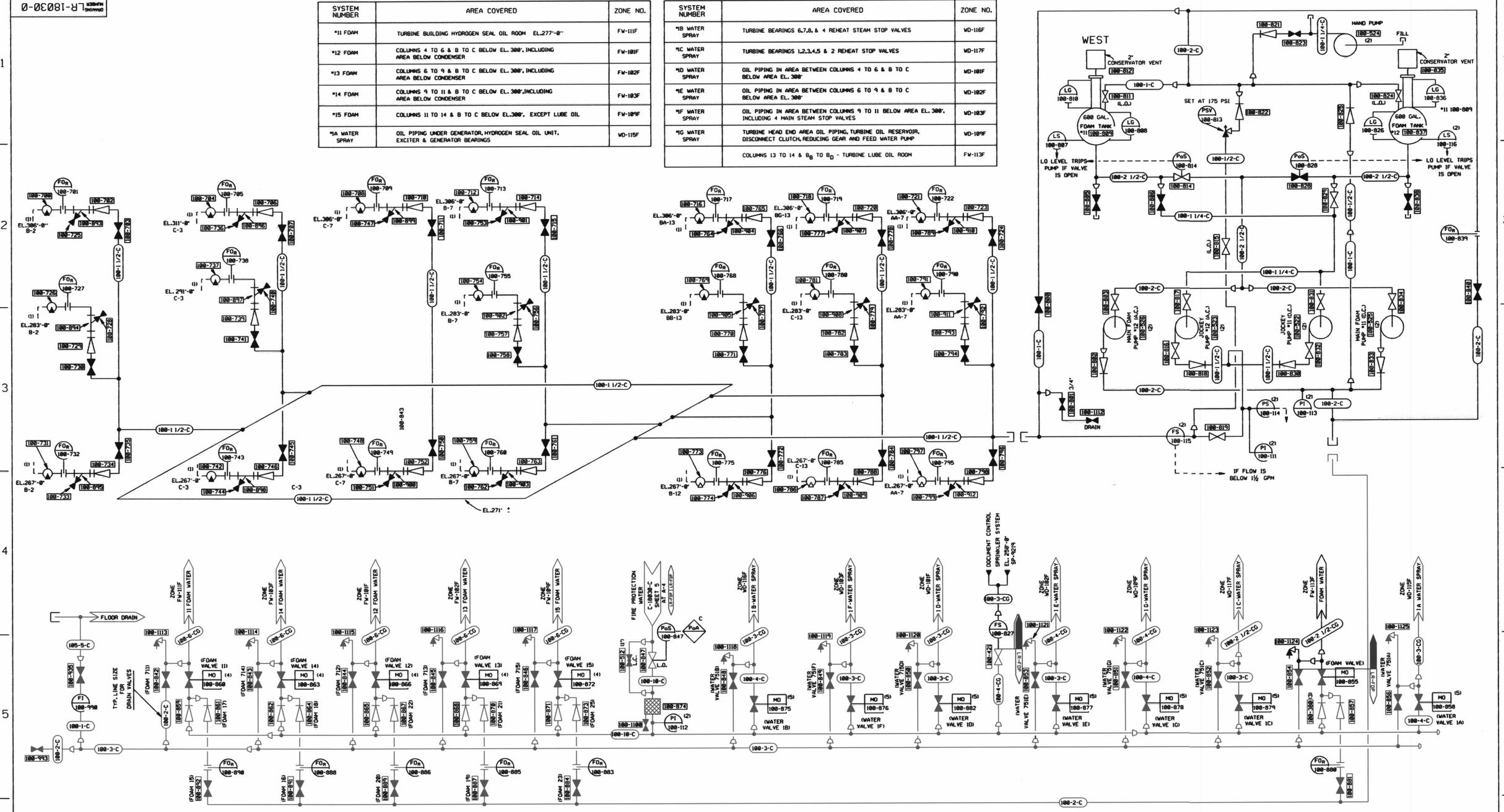

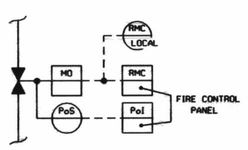

TYPICAL FOR ALL WATER VALVES (5)

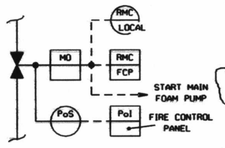

TYPICAL FOR ALL FOAM VALVES (4)

NOTES: (THESE NOTES PERTAIN TO SHEET 2 ONLY)
1) FIRE PROTECTION WATER SYSTEM SEE C-18030-C SHT. 3 TO 7
2) BY GRINNELL CORP. (GEHRING CORP. FOR *MAIN FOAM PUMP *11 & *12
3) BY FIRE PROTECTION INDUSTRIES
4) SEE FOAM VALVE DETAIL (4), THIS SHEET
5) SEE WATER VALVE DETAIL (5), THIS SHEET

FOR REF. SEE NMPC DWG'S C-34954-C SHEET 1 THRU 5 (S13.1)

LEGEND
FOAM & WATER HAND HOSE & REEL STATION

LR NOTE:
PLEASE REFER TO DRAWING LR-18000-C SHEETS 1 AND 2 FOR LR BOUNDARY DRAWING NOTES, SYMBOLS, AND ACRONYMS.

NOTE: THIS DRAWING WAS CREATED USING COMPUTER AIDED DRAFTING DO NOT MAKE MANUAL CHANGES

REV	DATE	BY	REMARKS	CK	APP	NF
0						

CONSTELLATION ENERGY GROUP
STA NINE MILE POINT NUCLEAR STATION UNIT NO. 1
ACC NO

APP LNM	TDB	FIRE PROTECTION FOAM & SPRAY WATER P & I DIAGRAM	
APP	APP		
APP	DATE		
DES	DR	DR CK	
NF	SCALE NONE	DWG NO LR-18030-0	INDEX 3-N2-S13.1 SH 2 REV 0

...\LR-18030-C_002.dgn 5/16/2004 1:29:31 PM

D057