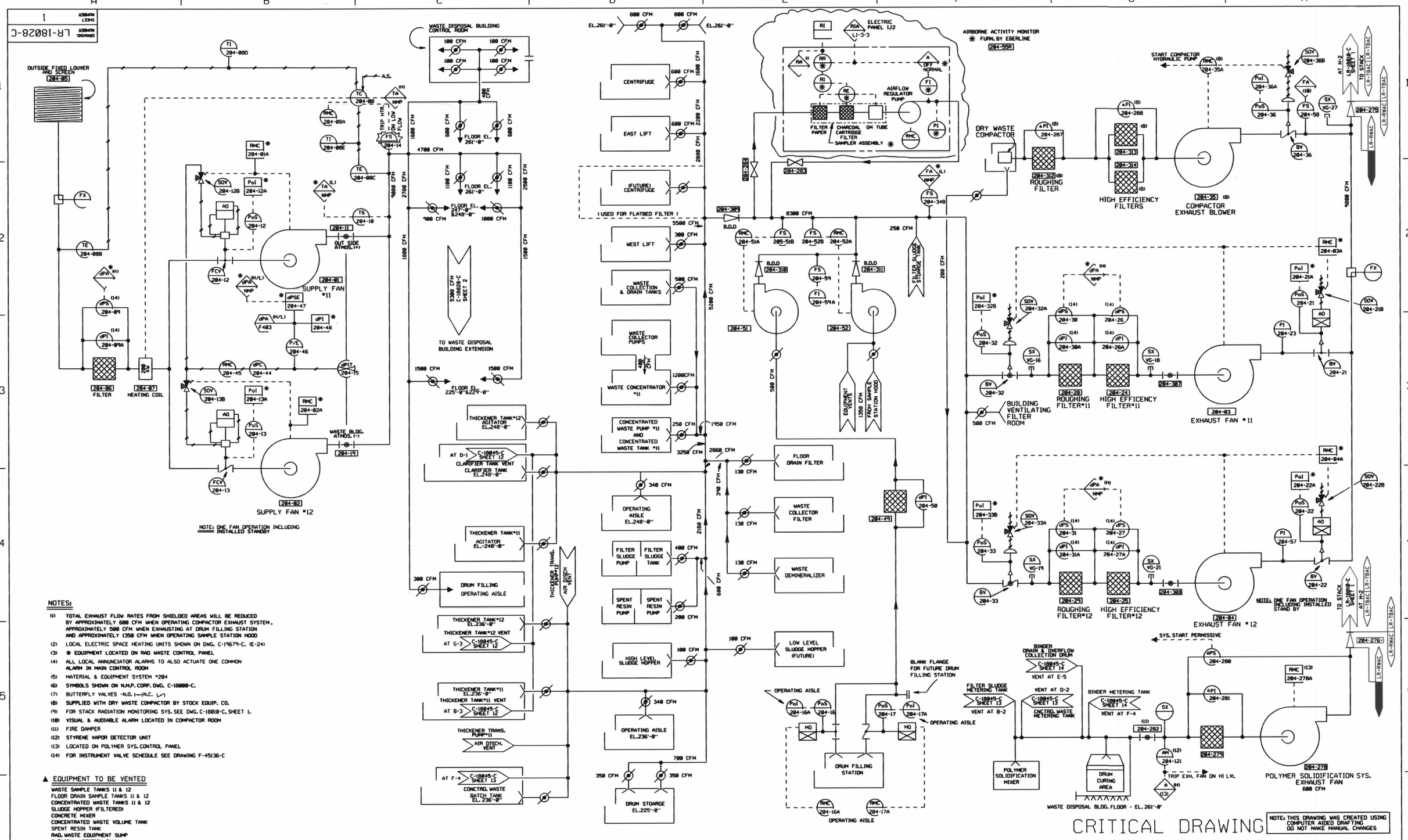

NOTE: ONE FAN OPERATION INCLUDING INSTALLED STANDBY

NOTES:

(1) TOTAL EXHAUST FLOW RATES FROM SHIELDED AREAS WILL BE REDUCED BY APPROXIMATELY 600 CFM WHEN OPERATING COMPACTOR EXHAUST SYSTEM, APPROXIMATELY 500 CFM WHEN EXHAUSTING AT DRUM FILLING STATION AND APPROXIMATELY 1350 CFM WHEN OPERATING SAMPLE STATION HOOD

(2) LOCAL ELECTRIC SPACE HEATING UNITS SHOWN ON DWG. C-19679-C. (E-24)

(3) * EQUIPMENT LOCATED ON RAD WASTE CONTROL PANEL

(4) ALL LOCAL ANNUNCIATOR ALARMS TO ALSO ACTUATE ONE COMMON ALARM IN MAIN CONTROL ROOM

(5) MATERIAL & EQUIPMENT SYSTEM *204

(6) SYMBOLS SHOWN ON N.M.P. CORP. DWG. C-18000-C.

(7) BUTTERFLY VALVES -N.O. ⊢⊣-N.C. ⊢⊣

(8) SUPPLIED WITH DRY WASTE COMPACTOR BY STOCK EQUIP. CO.

(9) FOR STACK RADIATION MONITORING SYS. SEE DWG. C-18010-C, SHEET 1.

(10) VISUAL & AUDIABLE ALARM LOCATED IN COMPACTOR ROOM

(11) FIRE DAMPER

(12) STYRENE VAPOR DETECTOR UNIT

(13) LOCATED ON POLYMER SYS. CONTROL PANEL

(14) FOR INSTRUMENT VALVE SCHEDULE SEE DRAWING F-45136-C

▲ EQUIPMENT TO BE VENTED

WASTE SAMPLE TANKS 11 & 12
FLOOR DRAIN SAMPLE TANKS 11 & 12
CONCENTRATED WASTE TANKS 11 & 12
SLUDGE HOPPER (FILTERED)
CONCRETE MIXER
CONCENTRATED WASTE VOLUME TANK
SPENT RESIN TANK
RAD. WASTE EQUIPMENT SUMP
CHEMICAL ADDITION TANK
RAD. WASTE FLOOR DRAIN SUMP #12
CENTRIFUGE (FILTERED)
CONCENTRATOR #11
CONCENTRATOR #11 HEAT EXCHANGER
CONCENTRATOR #11 HEATER VENT GAS COOLER
CONCENTRATOR #11 VENT CONDENSER
ELECT.BOILER #11 CONDENSATE RECEIVER
CLARIFIER TANK
THICKENER TANKS #11 & 12
THICKENER TRANSFER PUMPS #11 & 12
CONCENTRATED WASTE BATCH TANK

LR NOTE:
PLEASE REFER TO DRAWING LR-18000-C SHEETS 1 AND 2 FOR LR BOUNDARY DRAWING NOTES, SYMBOLS, AND ACRONYMS.

* BV-204-276 has been added to this drawing to aid the depiction of AMR boundaries for License Renewal. (Ref.: NMP Drawing No. C-26648-C Sheet 1, Revision 2 and Appendix B Safety Determination No. 92-010 Rev. 0)

REV	DATE	BY	REMARKS	CK	APP

...\LR-18028-C_001.dgn 5/16/2004 11:58:17 AM

D055