DRAWING NUMBER LR-18017-C
SHEET NUMBER 1

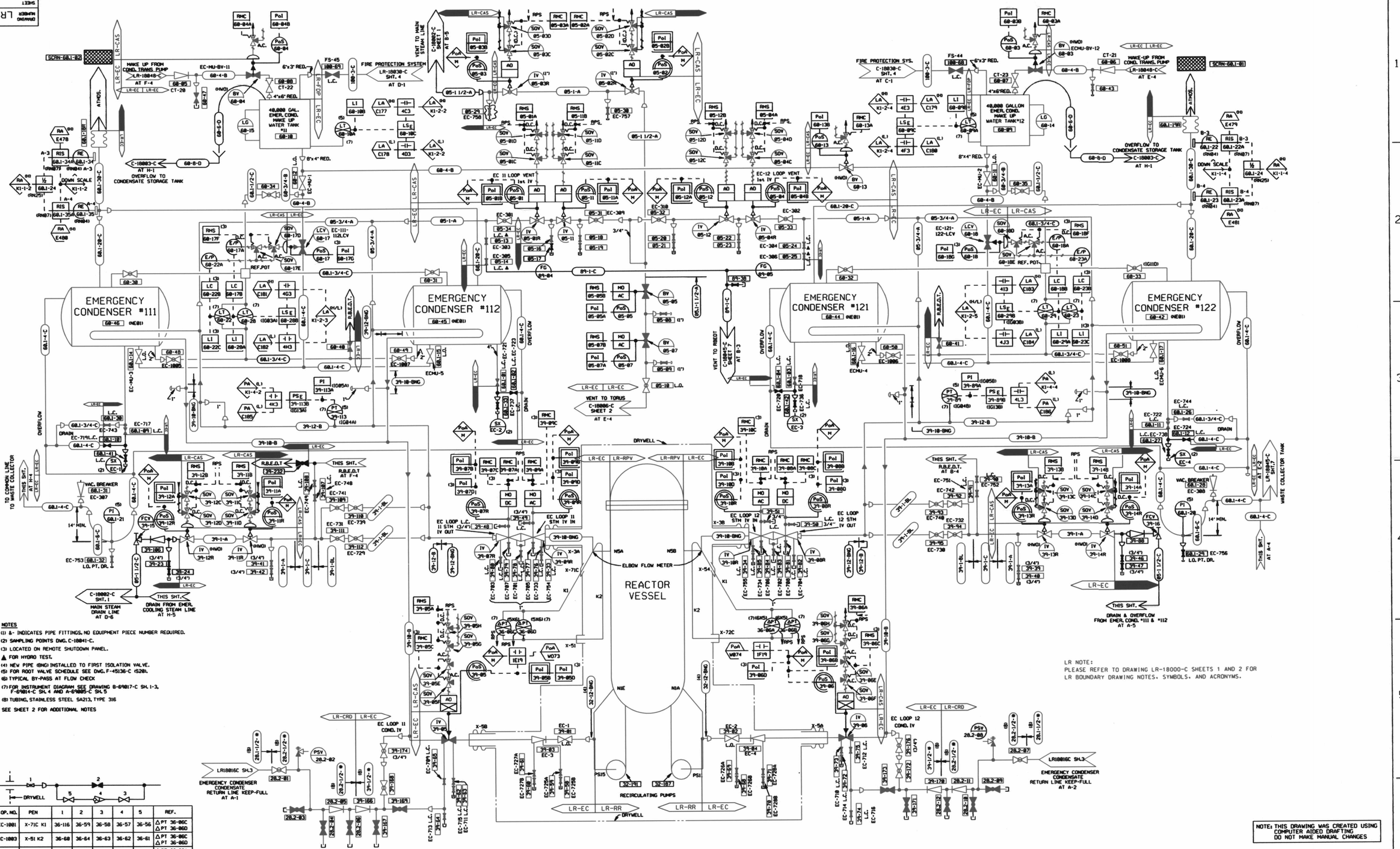

NOTES

(1) &- INDICATES PIPE FITTINGS, NO EQUIPMENT PIECE NUMBER REQUIRED.
(2) SAMPLING POINTS DWG. C-18041-C.
(3) LOCATED ON REMOTE SHUTDOWN PANEL.
▲ FOR HYDRO TEST.
(4) NEW PIPE (BNG) INSTALLED TO FIRST ISOLATION VALVE.
(5) FOR ROOT VALVE SCHEDULE SEE DWG. F-45136-C (S2B).
(6) TYPICAL BY-PASS AT FLOW CHECK
(7) FOR INSTRUMENT DIAGRAM SEE DRAWING B-69017-C SH. 1-3, F-69014-C SH. 4 AND A-69005-C SH. 5
(8) TUBING, STAINLESS STEEL SA213, TYPE 316

SEE SHEET 2 FOR ADDITIONAL NOTES

OP. NO.	PEN	1	2	3	4	5	REF.
EC-1001	X-71C K1	36-116	36-59	36-58	36-57	36-56	△PT 36-06C △PT 36-06D
EC-1003	X-51 K2	36-60	36-64	36-63	36-62	36-61	△PT 36-06C △PT 36-06D
EC-1002	X-54 K1	36-65	36-69	36-68	36-67	36-66	△PT 36-06A △PT 36-06B
EC-1004	X-72C K2	36-70	36-74	36-73	36-72	36-71	△PT 36-06A △PT 36-06B

LR NOTE:
PLEASE REFER TO DRAWING LR-18000-C SHEETS 1 AND 2 FOR LR BOUNDARY DRAWING NOTES, SYMBOLS, AND ACRONYMS.

NOTE: THIS DRAWING WAS CREATED USING COMPUTER AIDED DRAFTING DO NOT MAKE MANUAL CHANGES

CONSTELLATION ENERGY GROUP

STA: NINE MILE POINT NUCLEAR STATION UNIT NO. 1

EMERGENCY COOLING SYSTEM
P & I DIAGRAM

SCALE: NONE | DWG NO: LR-18017-C | SH 1 | REV 0

...\LR-18017-C_001.dgn 5/16/2004 11:25:08 AM

D039