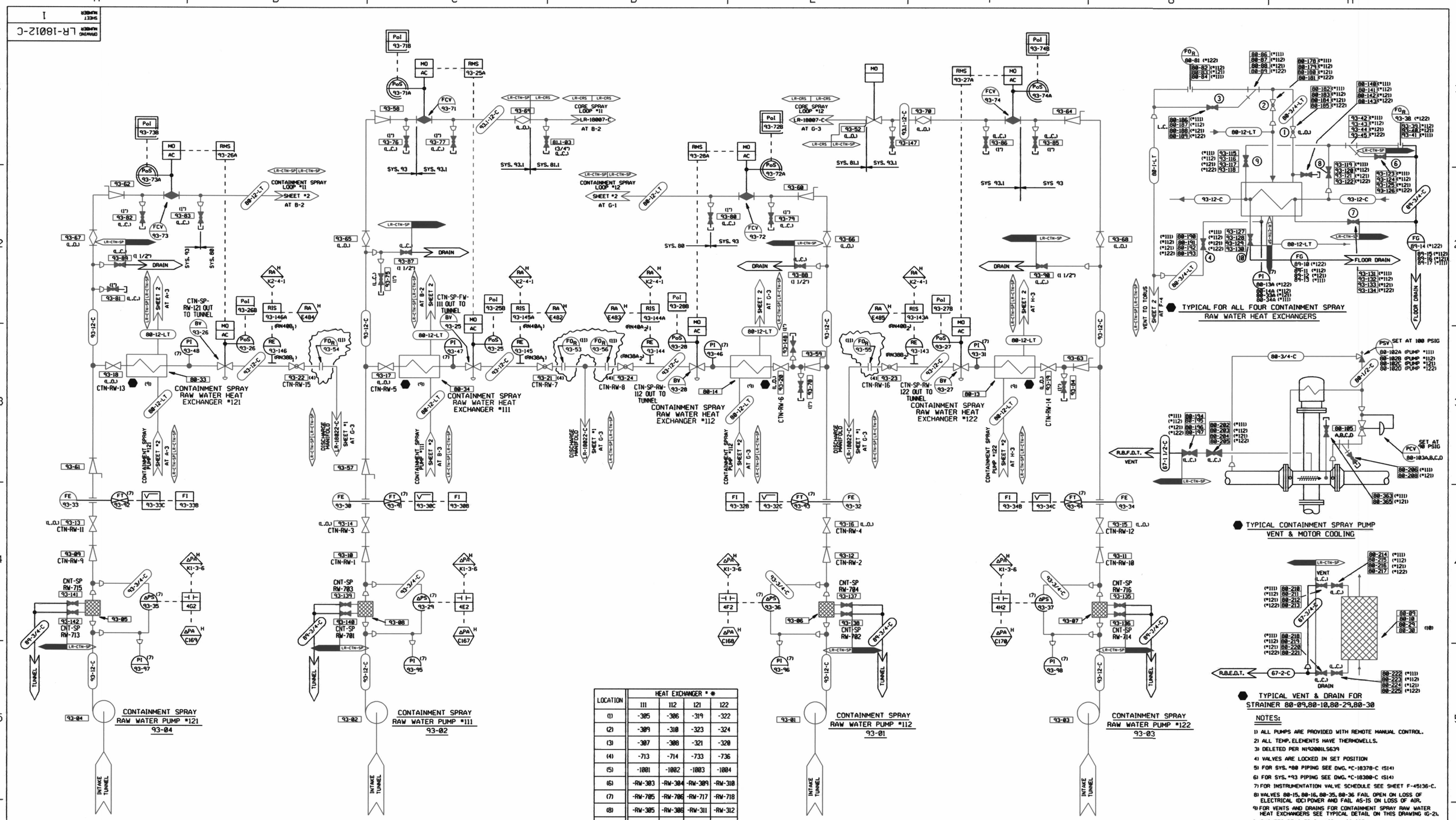

LOCATION	HEAT EXCHANGER # *			
	111	112	121	122
(1)	-305	-306	-319	-322
(2)	-309	-310	-323	-324
(3)	-307	-308	-321	-320
(4)	-713	-714	-733	-736
(5)	-1001	-1002	-1003	-1004
(6)	-RW-303	-RW-304	-RW-309	-RW-310
(7)	-RW-705	-RW-706	-RW-717	-RW-718
(8)	-RW-305	-RW-306	-RW-311	-RW-312
(9)	-RW-301	-RW-302	-RW-307	-RW-308
(10)	-RW-707	-RW-708	-RW-719	-RW-720

* THESE VALVE OPERATING NOS. ALL START WITH "CTN-SP- "

LR NOTE:
PLEASE REFER TO DRAWING LR-18000-C SHEETS 1 AND 2 FOR LR BOUNDARY DRAWING NOTES, SYMBOLS, AND ACRONYMS.

NOTES:

1) ALL PUMPS ARE PROVIDED WITH REMOTE MANUAL CONTROL.
2) ALL TEMP. ELEMENTS HAVE THERMOWELLS.
3) DELETED PER N192001LS639
4) VALVES ARE LOCKED IN SET POSITION
5) FOR SYS. #80 PIPING SEE DWG. #C-18378-C (S14)
6) FOR SYS. #93 PIPING SEE DWG. #C-18380-C (S14)
7) FOR INSTRUMENTATION VALVE SCHEDULE SEE SHEET F-45136-C.
8) VALVES 80-15, 80-16, 80-35, 80-36 FAIL OPEN ON LOSS OF ELECTRICAL (DC) POWER AND FAIL AS-IS ON LOSS OF AIR.
9) FOR VENTS AND DRAINS FOR CONTAINMENT SPRAY RAW WATER HEAT EXCHANGERS SEE TYPICAL DETAIL ON THIS DRAWING (G-2).
10) BASKETS REMOVED BY MOD N1-96-005
11) FLANGES ARE INSTALLED, THE ORIFICE PLATE IS NOT INSTALLED.

NOTE: THIS DRAWING WAS CREATED USING COMPUTER AIDED DRAFTING
DO NOT MAKE MANUAL CHANGES

CONSTELLATION ENERGY GROUP

STA: NINE MILE POINT NUCLEAR STATION UNIT NO. 1

REACTOR CONTAINMENT
SPRAY RAW WATER SYSTEM
P & I DIAGRAM

SCALE	DWG NO	INDEX	SH	REV
NONE	LR-18012-C	3-N2-S14	1	0

DRAWING NUMBER LR-18012-C
SHEET NUMBER 1

...\LR-18012-C_001.dgn 5/16/2004 10:36:18 AM

D026