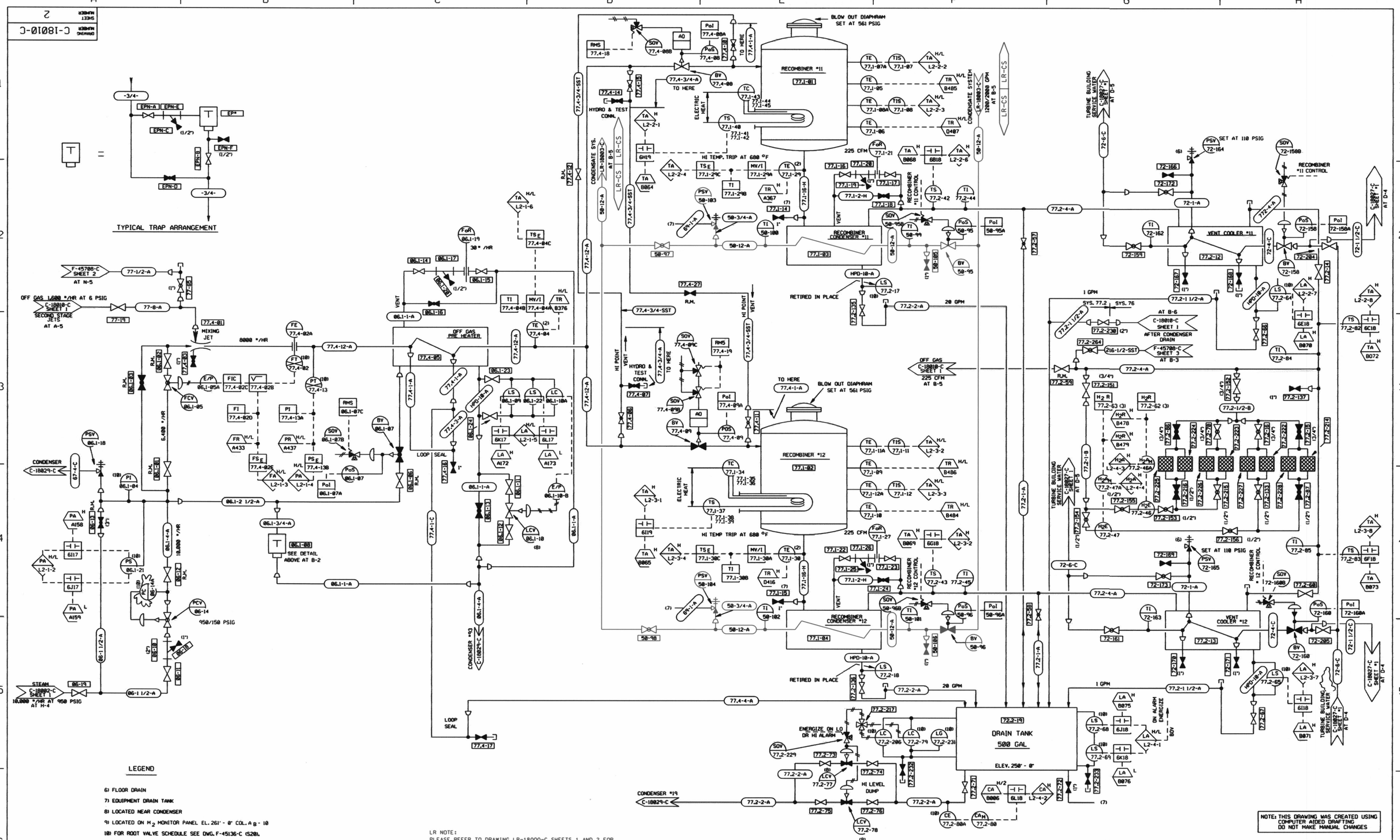

...\LR-18010-C_002.dgn 5/16/2004 10:20:03 AM

D019