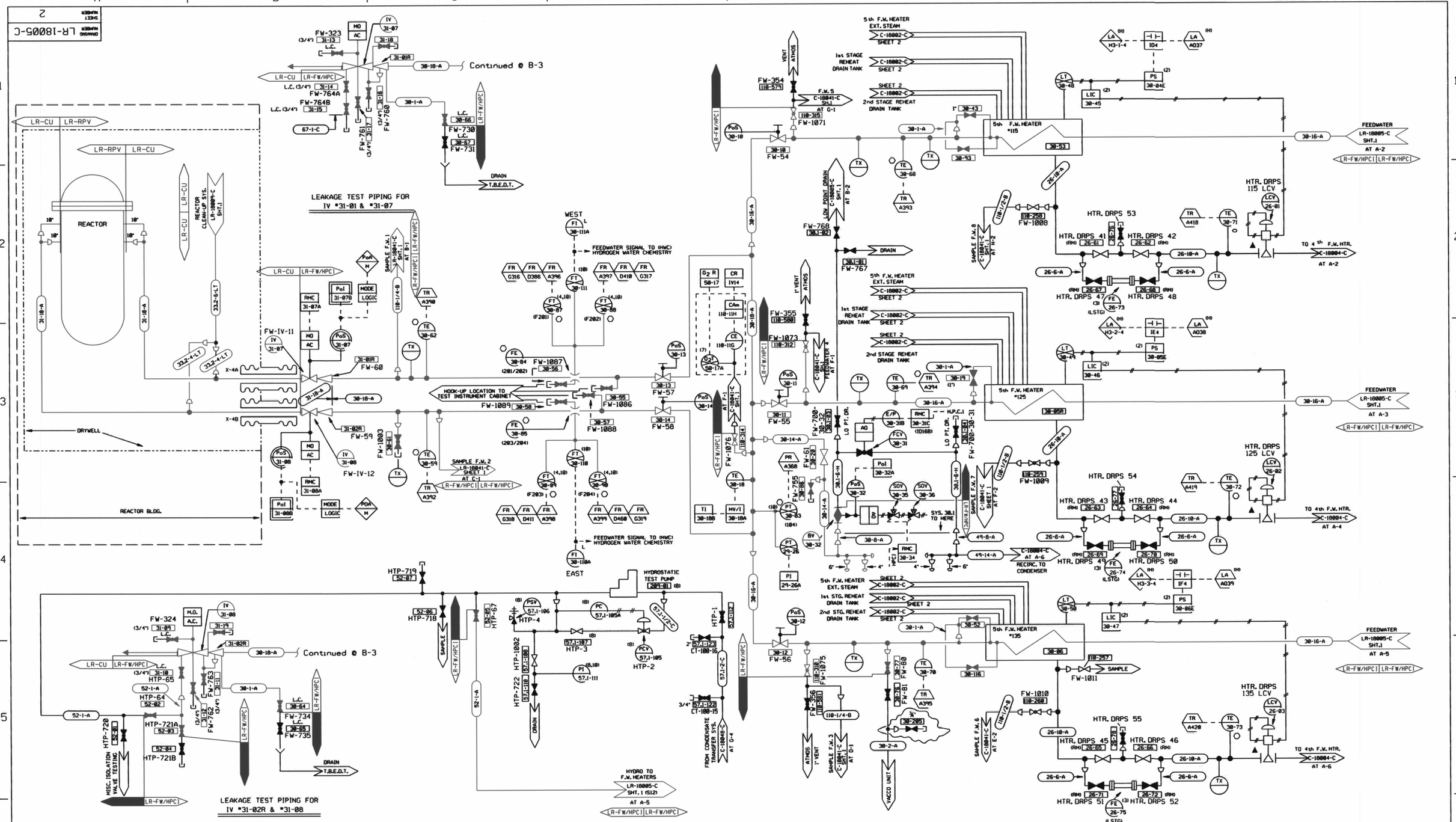

NOTES:

(1) FOR EXTRACTION STEAM PIPING AT HEATERS SEE DWG. C-18002-C SHEET 2
FOR VENTS & DRAINS AT HEATERS SEE DWG. C-18024-C
(2) FEEDWATER HEATER CONTROL PANEL
(3) REMOVABLE (FOR TEST ONLY) FURNISHED BY G.E. CO.
(4) MTG. IN TRANSDUCER CABINET #11
(5) MTG. IN TRANSDUCER CABINET #12
(6) FURNISHED WITH 29-137, 29-141
(7) CONDUCTIVITY SAMPLE PANEL (C-18041-C)
(8) FURNISHED BY WORTHINGTON PUMP
(9) VALVE FAILS "AS IS" ON LOSS OF AIR SUPPLY
(10) FOR INSTRUMENTATION VALVE SCHEDULE SEE DWG. F-45136-C
(11) LOCATED ON REHEATER OPERATING PANEL (N)
(12) INSULATION TEN FEET UPSTREAM OF PUMP 29-01
(ON SUCTION PIPING) HAS BEEN PERMANENTLY REMOVED.
(13) FOR INSTRUMENT DIAGRAM SEE DWG'S A-69005-C SH. 1-5.
(14) FOR INSTRUMENT AIR SUPPLY, SEE DWG. B-22109-C SH.9.

LR NOTE:
PLEASE REFER TO DRAWING LR-18000-C SHEETS 1 AND 2 FOR LR BOUNDARY DRAWING NOTES, SYMBOLS, AND ACRONYMS.

NOTE: THIS DRAWING WAS CREATED USING COMPUTER AIDED DRAFTING DO NOT MAKE MANUAL CHANGES

CONSTELLATION ENERGY GROUP

STA NINE MILE POINT NUCLEAR STATION UNIT NO. 1

FEED WATER FLOW
HIGH PRESSURE
P & I DIAGRAM

REV	DATE	BY	REMARKS	CK	APP	MF
0						

SCALE NONE | DWG NO LR-18005-C | INDEX 3-N2-S12 | SH 2 | REV 0

...\LR-18005-C_002.dgn 5/16/2004 9:48:44 AM

D008