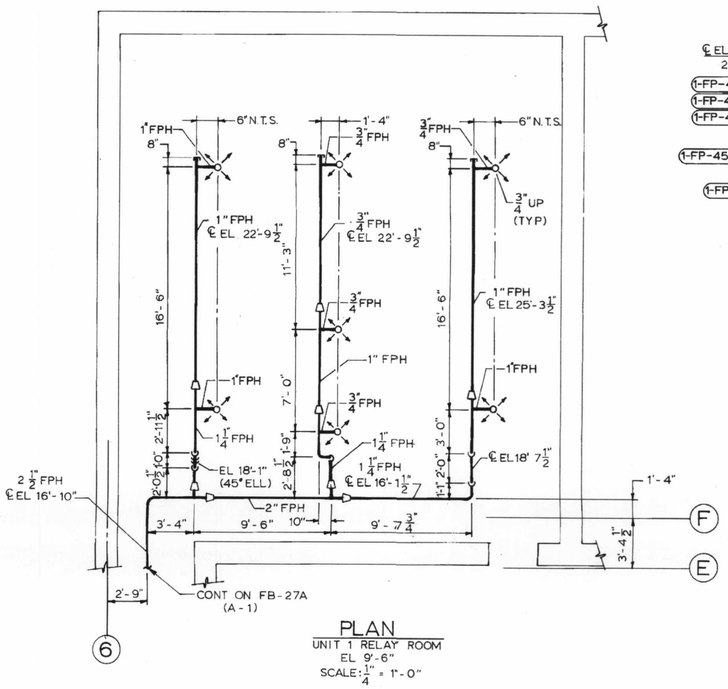

PLAN
UNIT 1 RELAY ROOM
EL 9'-6"
SCALE: 1/4" = 1'-0"

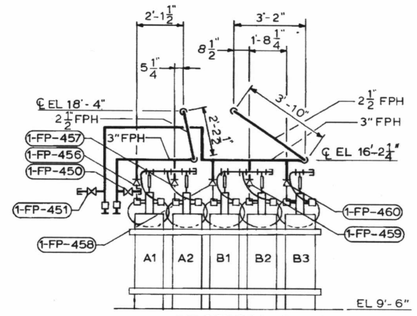

SECTION A - A (B-7)
SCALE: 3/8" = 1'-0"

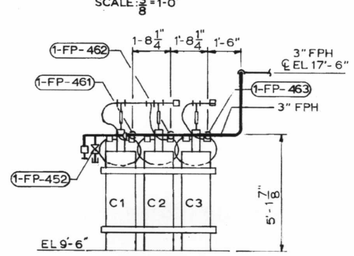

SECTION B - B (C-7)
SCALE: 3/8" = 1'-0"

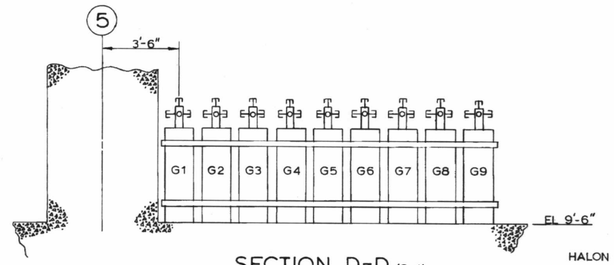

SECTION D-D (G-4)
SCALE: 3/8" = 1'-0"

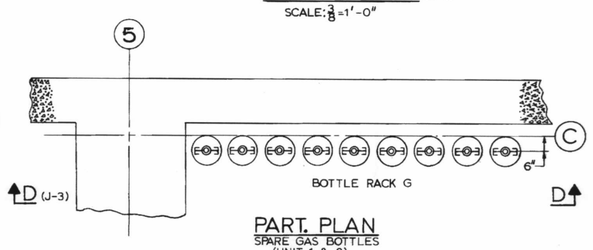

PART PLAN
SPARE GAS BOTTLES
(UNIT 1 & 2)
EL 9'-6"
SCALE: 3/8" = 1'-0"

HALON GAS SYSTEM NOTES:

1. ALL PIPE TO BE SCH 40 GR B A-53 OR A-106 SEAMLESS STL PIPE.
2. FITTINGS - 3/4" AND SMALLER TO BE SCRD-150# BLACK MALLEABLE IRON ANSI B16.3 ASTM-A-197
   - 1" THRU 2" TO BE 300# BLACK MALLEABLE IRON ANSI B16.3 ASTM-A-197
   - 2 1/2" THRU 3" TO BE SCH 40 STD BUTT WELD ANSI B16.9 ASTM-A-234 LG TAN
   - SPECIFIED LOCATIONS TO BE ANSI B16.11 ASTM-A-105, GR II 2000 LB MIN OR A234 (STD) BUTT WELD OR SCRD.
3. ALL TEES TO BE IN THE HORIZONTAL POSITION, NO VERTICAL OUTLETS EXCEPT FOR MANIFOLD CON. & TEES ON END OF LINES.
4. PIPE HANGERS ARE DESIGNED CATAGORY III - SEISMIC.
5. DENOTES HALON 1301 NOZZLES, ARROWS INDICATE NUMBER AND DIRECTION OF SPRAY PORTALS.
6. LOCATE RACK NUMBER IDENTIFICATION ON TUBE STEEL TO THE LEFT OF THE BOTTLE LOCATION.
7. REFER TO DRAWING 11448-FB-27K1 FOR BOTTLE HEAD DETAIL CONNECTIONS.
8. INITIATION OF SYSTEM BY CONTROL STATIONS PROVIDES PERSONNEL ALARMS AND 60 SECOND DELAY OF HALON DISCHARGE.

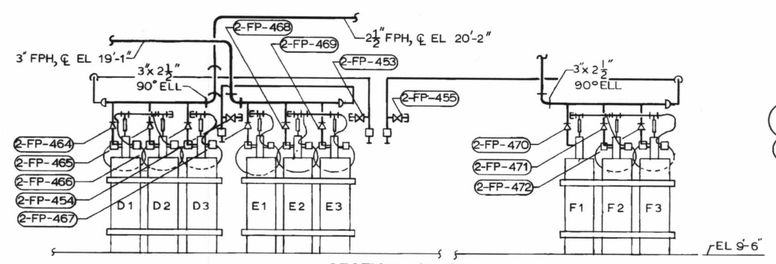

SECTION C - C (L-8)
SCALE: 3/8" = 1'-0"

REFERENCES:

1. LICENSE RENEWAL FIRE PROTECTION SYS 11448-LRB-27K

GENERAL NOTES:

1. NOT USED.
2. FOR GENERAL NOTES AND LEGEND SEE FB-27C.

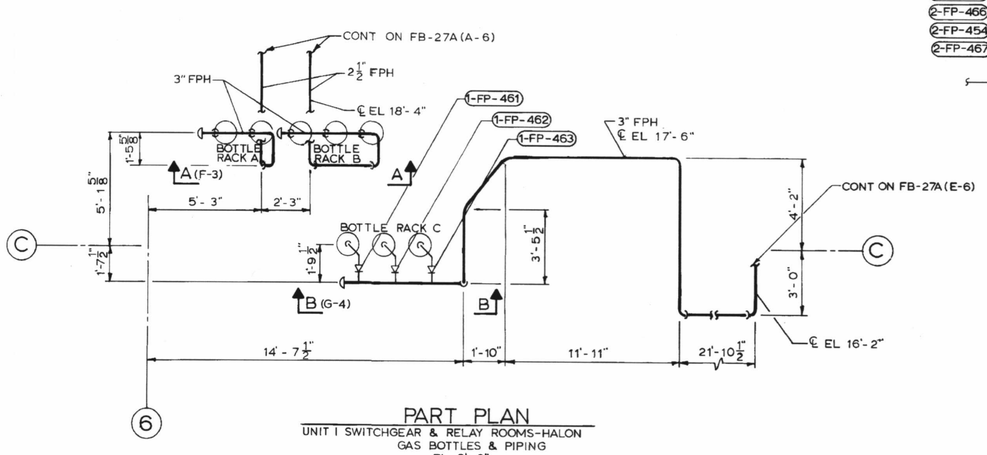

PART PLAN
UNIT 1 SWITCHGEAR & RELAY ROOMS-HALON
GAS BOTTLES & PIPING
EL 9'-6"
SCALE: 3/8" = 1'-0"

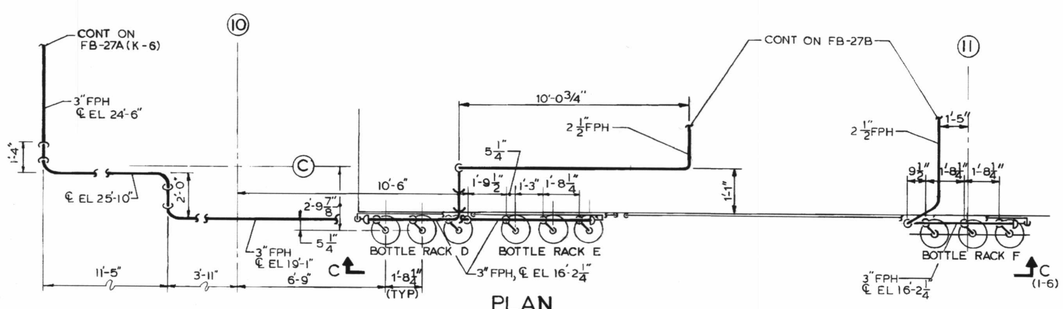

PLAN
UNIT 2 HALON CYLINDER LOCATION
EL 9'-6"
SCALE: 3/8" = 1'-0"

D-05

VIRGINIA POWER
NORTH CAROLINA POWER
NUCLEAR ENGINEERING SERVICES
RICHMOND, VIRGINIA

PLUMBING AND FIRE PROTECTION
SERVICE BUILDING
SURRY POWER STATION - UNIT 1

REVISION DESCRIPTION	CAD NO: C:\usr\dgn\27KHYBu81	
REVISED PER ENGINEERING REVIEW (DCR #1-1058)	DRAWING NO: 11448-FB-27K	REV 7
DSGN SDW	SCALE: 3/8" = 1'-0" UNLESS OTHERWISE NOTED	SH 1 OF 1

PC=SEF & SP1

VERIFY print 24 hrs after 8:30:20 AM05/06/2004
WINDLES
08-OCT-2001 13:05
C:\usr\dgn\27KHYBu81
PRIOR TO USING FOR DESIGN WORK CHECK DMIS FOR WORK PENDING