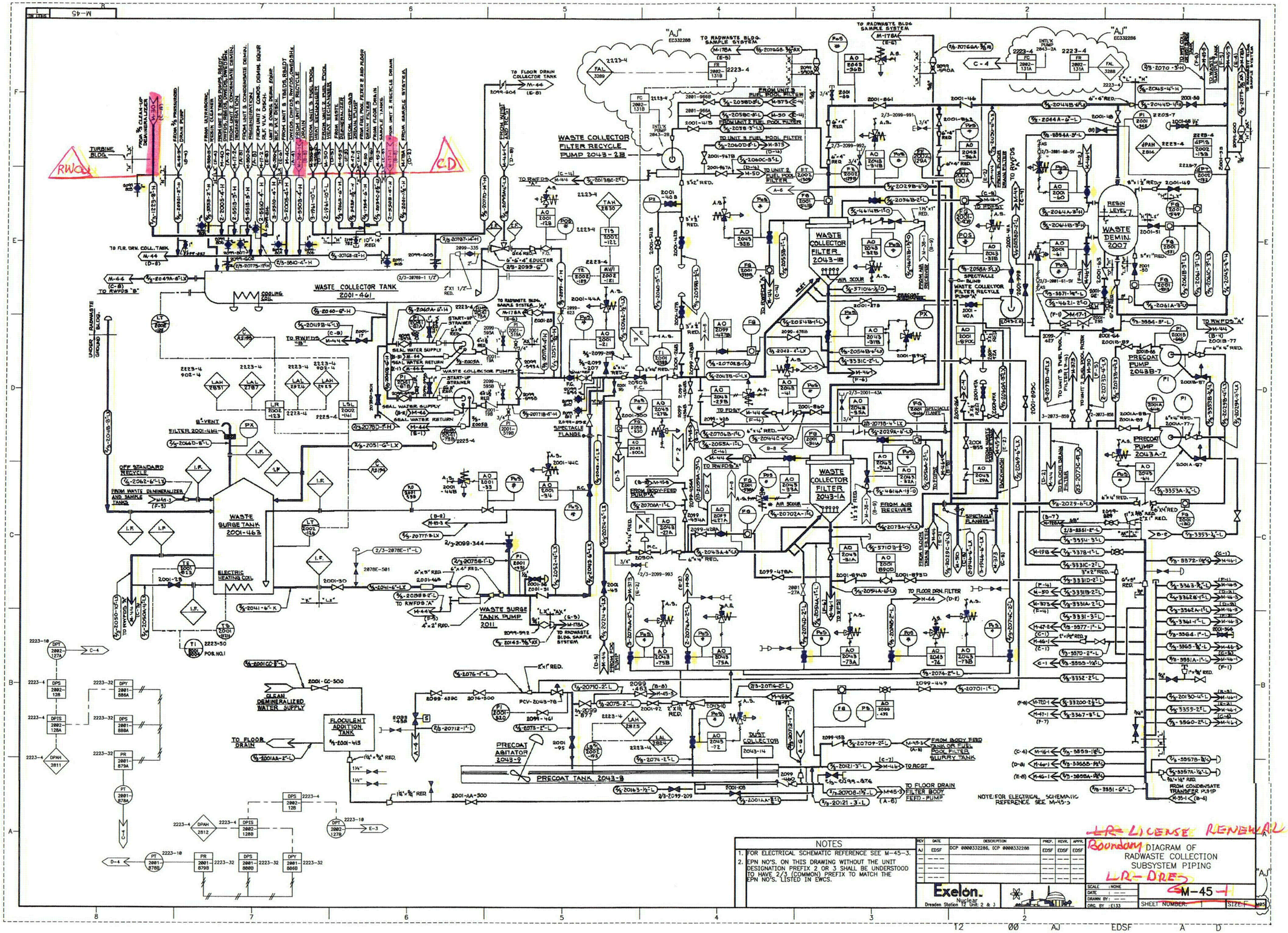

NOTES

1. FOR ELECTRICAL SCHEMATIC REFERENCE SEE M-45-3.
2. EPN NO'S. ON THIS DRAWING WITHOUT THE UNIT DESIGNATION PREFIX 2 OR 3 SHALL BE UNDERSTOOD TO HAVE 2/3 (COMMON) PREFIX TO MATCH THE EPN NO'S. LISTED IN EWCS.

REV	DATE	DESCRIPTION	PREP.	REVR.	APPR.
AJ	EDSF	DCP 0000332286, DCP 0000332288	EDSF	EDSF	EDSF

Exelon. Nuclear
Dresden Station 12 Unit 2 & 3

SCALE : NONE
DATE : ---
DRAWN BY : ---
ORG. BY : E133

~~LR~~ LICENSE RENEWAL
Boundary DIAGRAM OF RADWASTE COLLECTION SUBSYSTEM PIPING
LR-DRES

SHEET NUMBER: M-45-1
SIZE: E

12 00 AJ EDSF A D

LR-DRE-M-48

RWCU AREA LEAK TEMPERATURE DETECTORS

PANEL 2202-77A

SEE S/D DWG 12E-2524A

SEE S/D DWG 12E-2524B

SEE S/D DWG 12E-2524A 12E-2524B

RWCU AREA LEAK TEMPERATURE DETECTORS

PANEL 2202-77B

SEE S/D DWG 12E-2524D

SEE S/D DWG 12E-2524E

SEE S/D DWG 12E-2524D 12E-2524E

CLEAN-UP FILTER BACKWASH SUPPLY TANK 2-1227

CONDENSATE SUPPLY

TO CRD SONIC CLEANER

FILTER AID TANK 2-1208

PRECOAT TANK 2-1209

PRECOAT AGITATOR 2-1214

FILTER AID PUMP 2-1211

STRAINER

ABANDONED IN PLACE

CONDENSATE FLUSH CONNECTION OUTSIDE SHIELDING

CLEANUP DEMINERALIZER 2-1202-C

CLEANUP DEMINERALIZER 2-1202-B

CLEANUP DEMINERALIZER 2-1202-A

REACTOR WATER CLEAN-UP PIPING

AREA TEMPERATURE DETECTOR

IN SCOPE COMPONENTS PER 54.4(a)(1), AND 54.4(a)(3)

OUT OF SCOPE COMPONENTS

REV	DATE	DESCRIPTION	PREP.	REVR.	APPR.
0	09/04/02	INITIAL ISSUE	RMD	JSL	MAH

Exelon. Nuclear

Dresden Station 12

LICENSE RENEWAL BOUNDARY DIAGRAM OF REACTOR WATER CLEANUP PIPING

LR-DRE-M-48

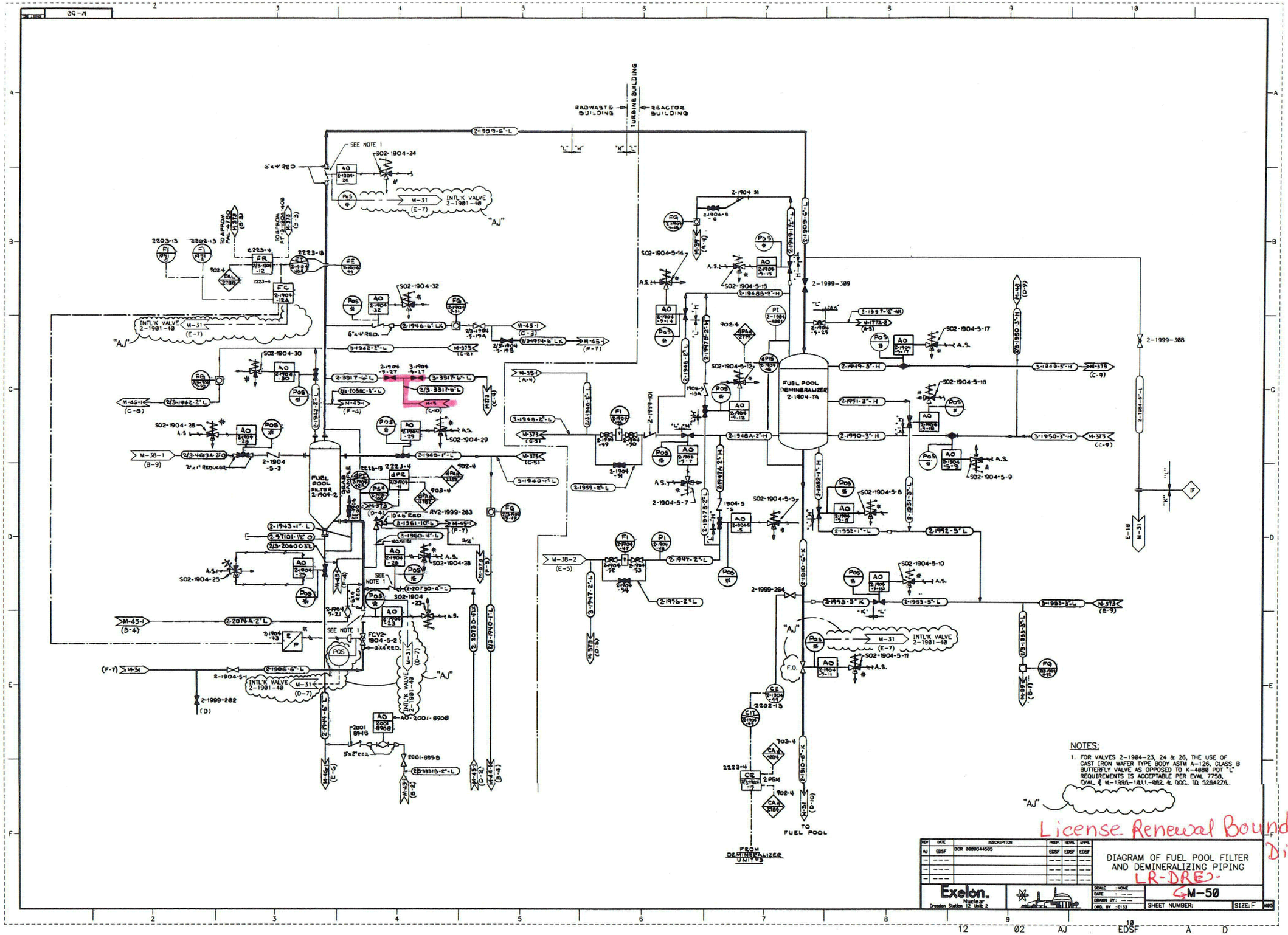

NOTES:

1. FOR VALVES 2-1904-23, 24 & 26, THE USE OF CAST IRON WAFER TYPE BODY ASTM A-126, CLASS B BUTTERFLY VALVE AS OPPOSED TO K-4080 PDT "L" REQUIREMENTS IS ACCEPTABLE PER EVAL 7758, EVAL & M-1996-1011-002 & DOC. ID 5264276.

License Renewal Boundary Diagram

REV	DATE	DESCRIPTION	PREP.	REVR.	APPR.
AJ	EDSF	DCR 0000344585	EDSF	EDSF	EDSF

DIAGRAM OF FUEL POOL FILTER AND DEMINERALIZING PIPING

LR-DRE-

Exelon. Nuclear
Dresden Station 12 Unit 2

SCALE : NONE
DATE : ---
DRAWN BY: ---
ORG. BY : E133

M-50

SHEET NUMBER: SIZE: F

12 02 AJ EDSF A D

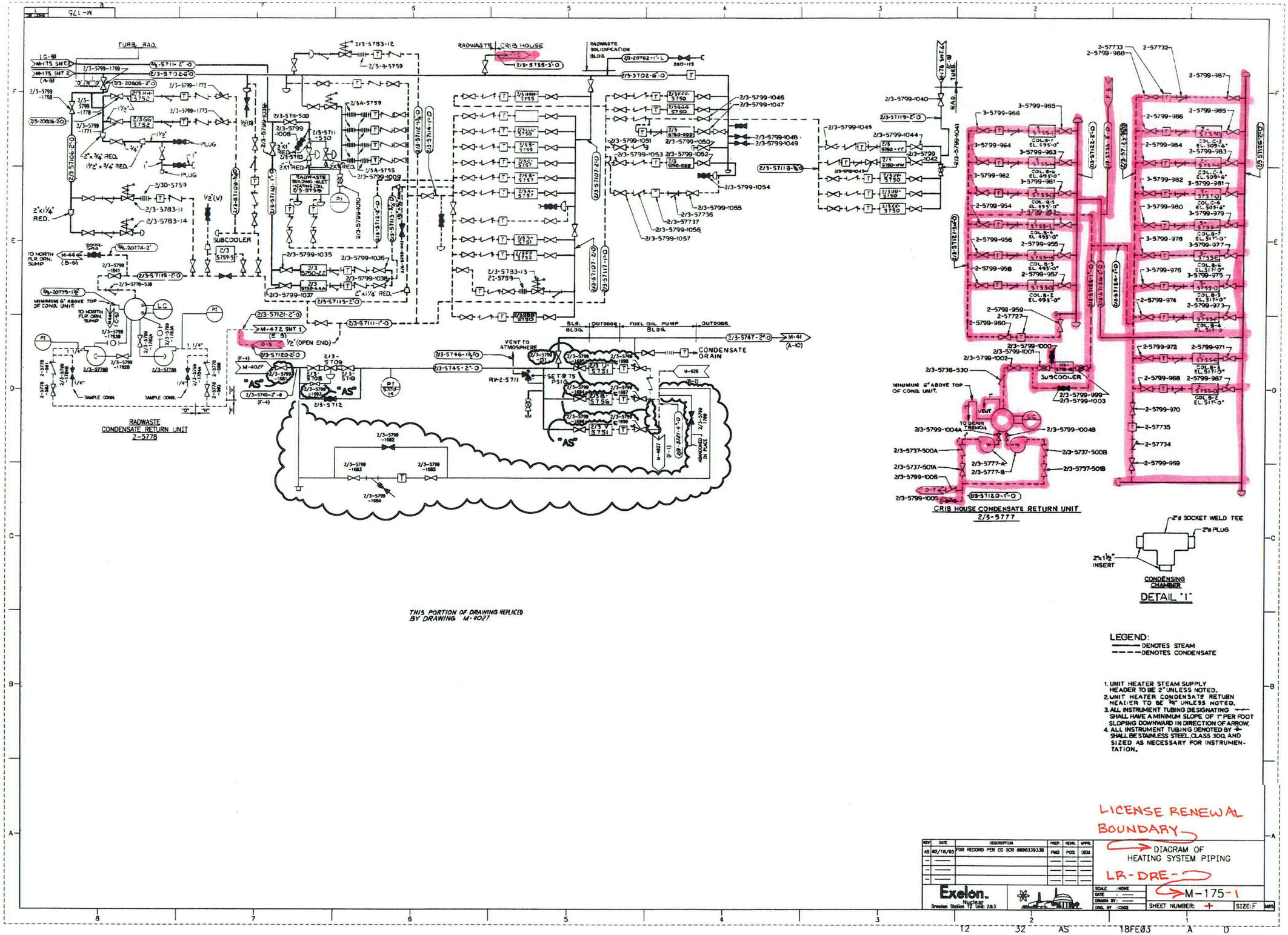

LEGEND:
——— DENOTES STEAM
- - - - DENOTES CONDENSATE

1. UNIT HEATER STEAM SUPPLY HEADER TO BE 2" UNLESS NOTED.
2. UNIT HEATER CONDENSATE RETURN HEADER TO BE ¾" UNLESS NOTED.
3. ALL INSTRUMENT TUBING DESIGNATING —·— SHALL HAVE A MINIMUM SLOPE OF 1" PER FOOT SLOPING DOWNWARD IN DIRECTION OF ARROW.
4. ALL INSTRUMENT TUBING DENOTED BY —+— SHALL BE STAINLESS STEEL, CLASS 300, AND SIZED AS NECESSARY FOR INSTRUMENTATION.

LICENSE RENEWAL BOUNDARY

REV	DATE	DESCRIPTION	PREP.	REVR.	APPR.
AS	02/18/03	FOR RECORD PER EC DCR 0000339338	FMG	POS	DEM

DIAGRAM OF HEATING SYSTEM PIPING

LR-DRE-

Exelon. Nuclear
Dresden Station 12 Unit: 2&3

SCALE: NONE
DATE:
DRAWN BY:
DRG. BY: C502

M-175-1

SHEET NUMBER: +
SIZE: F

12 32 AS 18FE03 A D

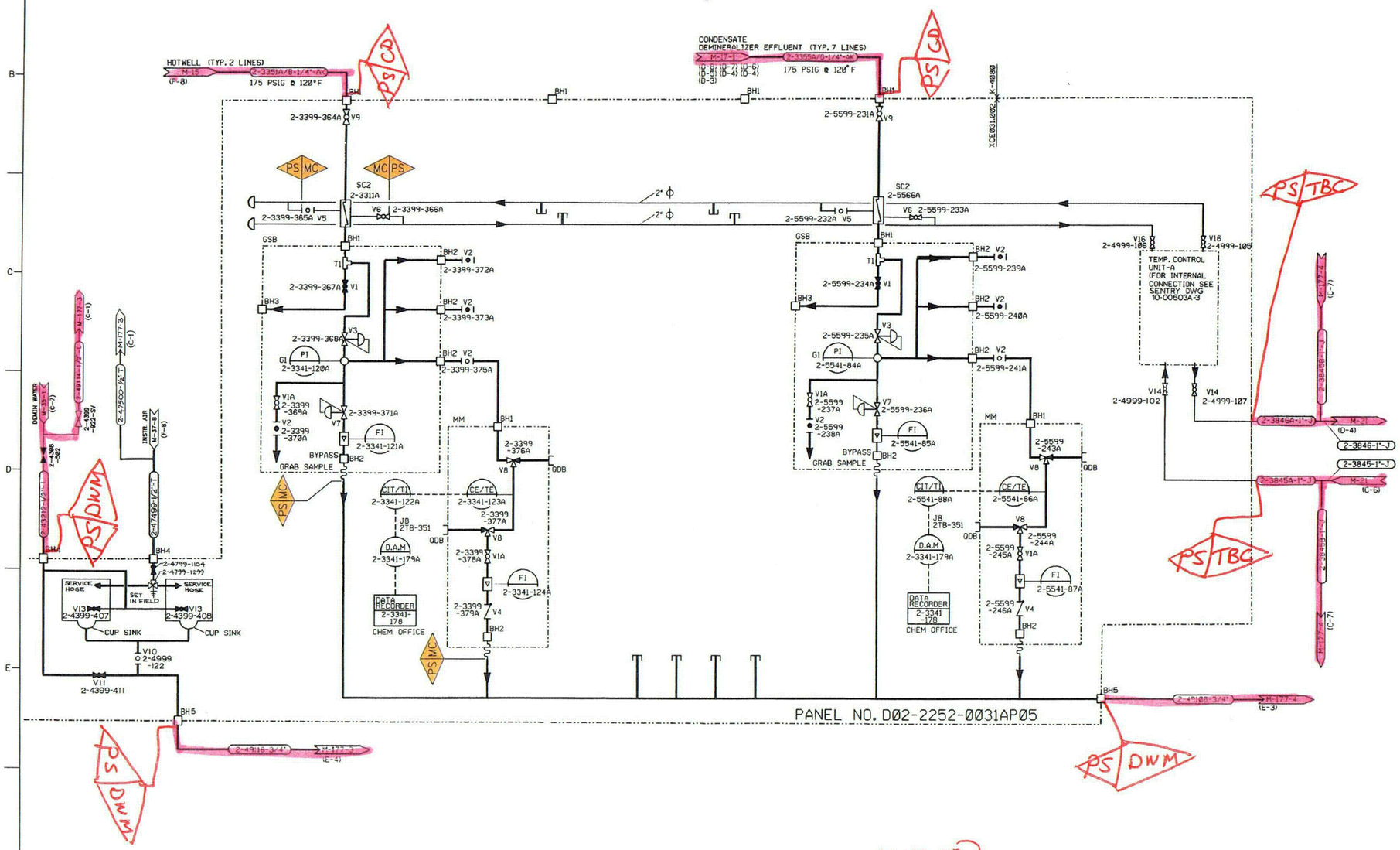

DWM = DEMINERALIZED WATER MAKEUP

CD = CONDENSATE AND CONDENSATE STORAGE

TBC = TBCCW

PS MC — LR SYSTEM BOUNDARY BREAKS

MC = MAIN CONDENSER

PS = PROCESS SAMPLING

OUT OF SCOPE COMPONENTS

REV	DATE	DESCRIPTION	PREP.	REVR.	APPR.
0	09/23/02	INITIAL ISSUE	RMD	JSL	MAH

LICENSE RENEWAL BOUNDARY DIAGRAM OF PROCESS SAMPLING PART 1 TURBINE BUILDING SAMPLE PANEL "A"

Exelon. Nuclear — Dresden Station

LR-DRE-M-177-1

LR-DRE-M-177-2

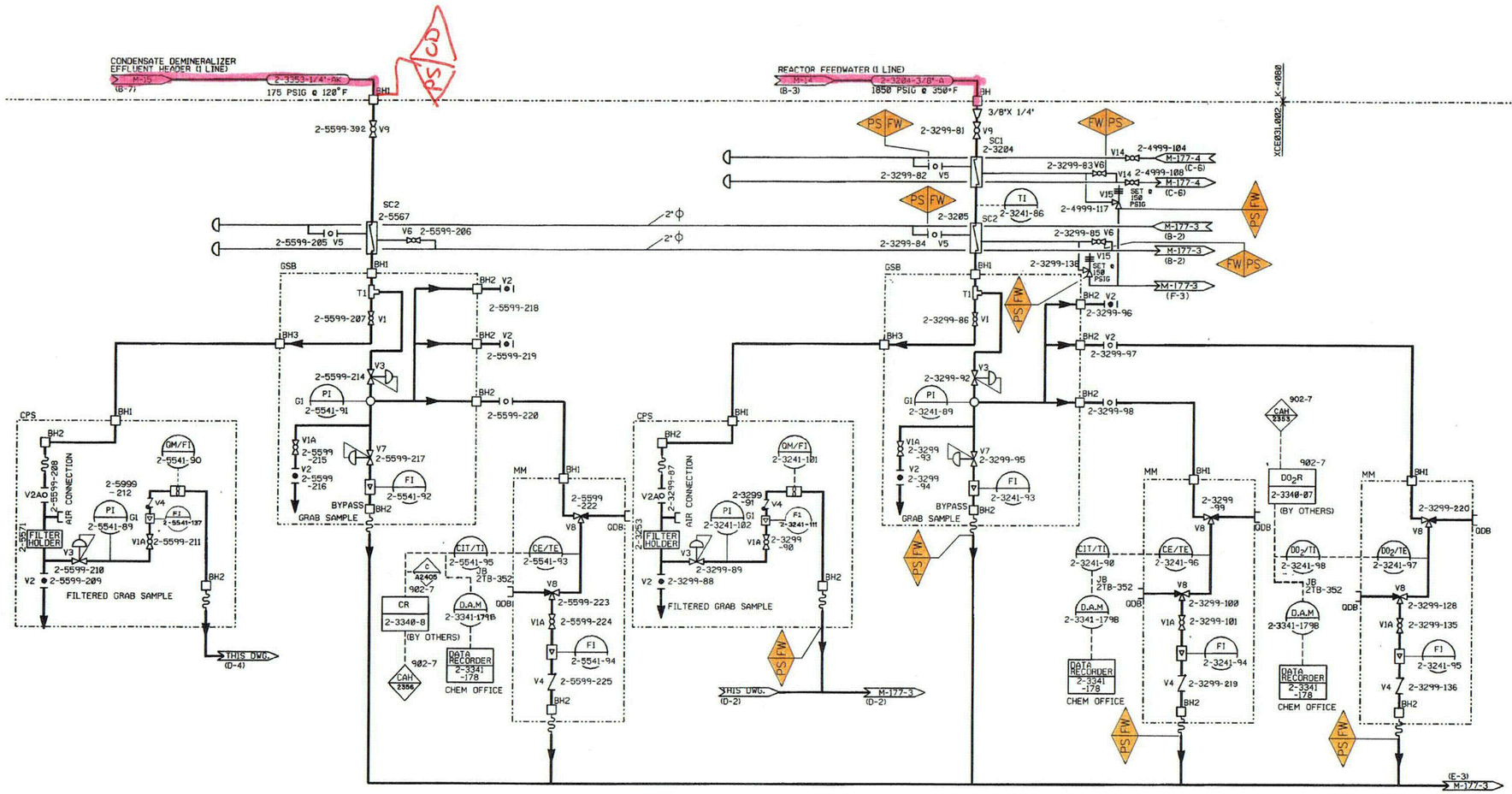

PANEL NO.
D02-2252-0031BP05

CD= CONDENSATE AND CONDENSATE STORAGE

PS FW LR SYSTEM BOUNDARY BREAKS

FW = FEEDWATER

PS = PROCESS SAMPLING

OUT OF SCOPE COMPONENTS

REV	DATE	DESCRIPTION	PREP.	REVR.	APPR.
0	11/18/02	INITIAL ISSUE	RMD	JSL	MAH

Exelon. Nuclear
Dresden Station 12

LICENSE RENEWAL BOUNDARY DIAGRAM OF PROCESS SAMPLING PART 1 TURBINE BLDG SAMPLE PANEL B

LR-DRE-M-177-2

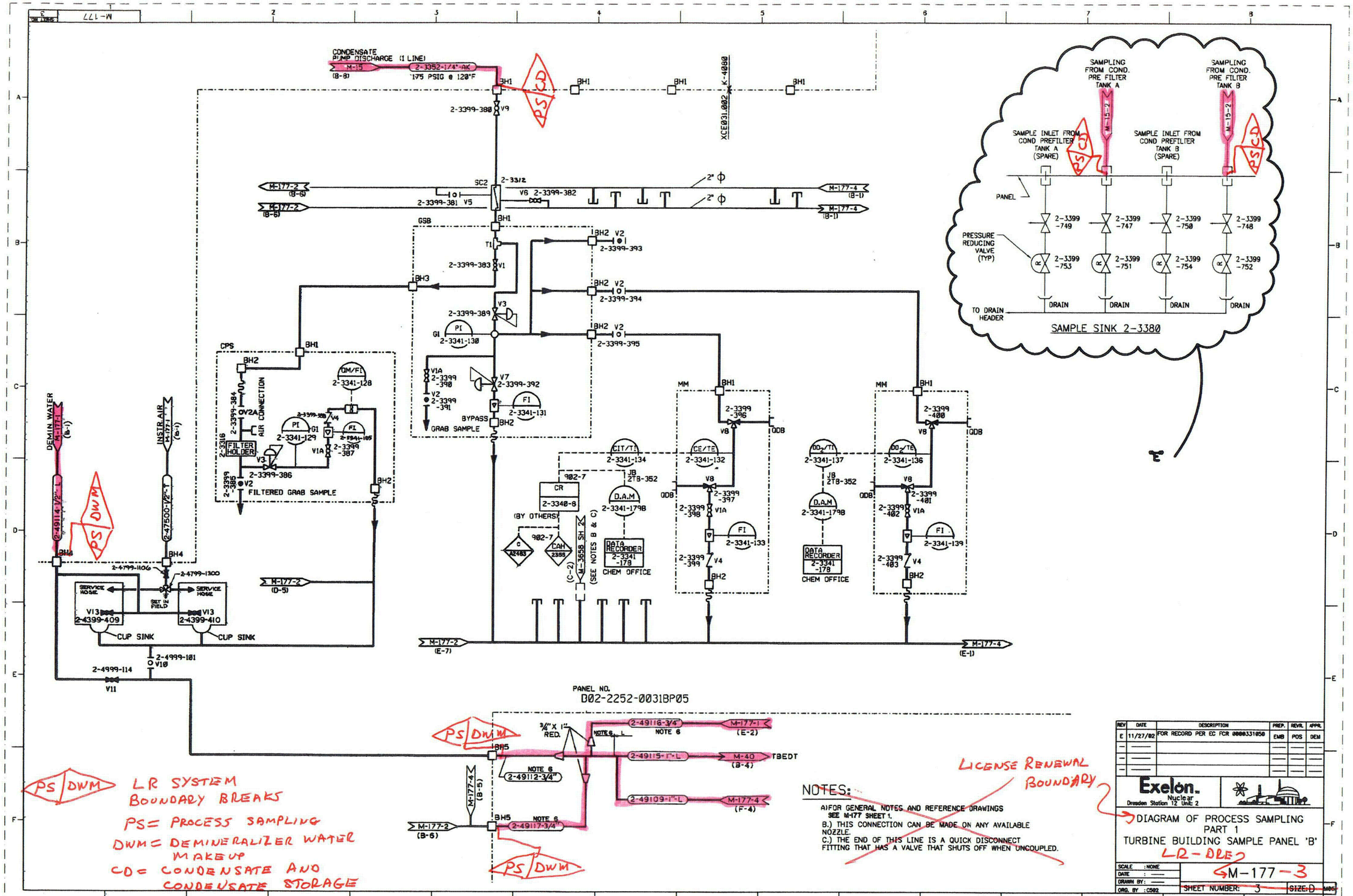
CONDENSATE PUMP DISCHARGE (1 LINE)
2-3352-1/4"-AK
175 PSIG @ 120°F
SAMPLING FROM COND. PRE FILTER TANK A
SAMPLING FROM COND. PRE FILTER TANK B
SAMPLE INLET FROM COND PREFILTER TANK A (SPARE)
SAMPLE INLET FROM COND PREFILTER TANK B (SPARE)
PANEL
PRESSURE REDUCING VALVE (TYP)
TO DRAIN HEADER
DRAIN
SAMPLE SINK 2-3380
GSB
CPS
FILTER HOLDER
FILTERED GRAB SAMPLE
GRAB SAMPLE
BYPASS
MM
CHEM OFFICE
DATA RECORDER
CUP SINK
SERVICE HOSE
PANEL NO.
D02-2252-0031BP05
TBEDT
LICENSE RENEWAL BOUNDARY
PS DWM
LR SYSTEM BOUNDARY BREAKS
PS= PROCESS SAMPLING
DWM= DEMINERALIZER WATER MAKEUP
CD= CONDENSATE AND CONDENSATE STORAGE
NOTES:
A) FOR GENERAL NOTES AND REFERENCE DRAWINGS SEE M-177 SHEET 1.
B.) THIS CONNECTION CAN BE MADE ON ANY AVAILABLE NOZZLE.
C.) THE END OF THIS LINE IS A QUICK DISCONNECT FITTING THAT HAS A VALVE THAT SHUTS OFF WHEN UNCOUPLED.
REV DATE DESCRIPTION PREP. REVR. APPR.
E 11/27/02 FOR RECORD PER EC FCR 0000331050 EMB POS DEM
Exelon. Nuclear
Dresden Station 12 Unit: 2
DIAGRAM OF PROCESS SAMPLING
PART 1
TURBINE BUILDING SAMPLE PANEL 'B'
LR-DRE2
M-177-3
SHEET NUMBER: 3
SIZE: D
12 02 E 27NOV02 A D

LR-DRE-M-177-4

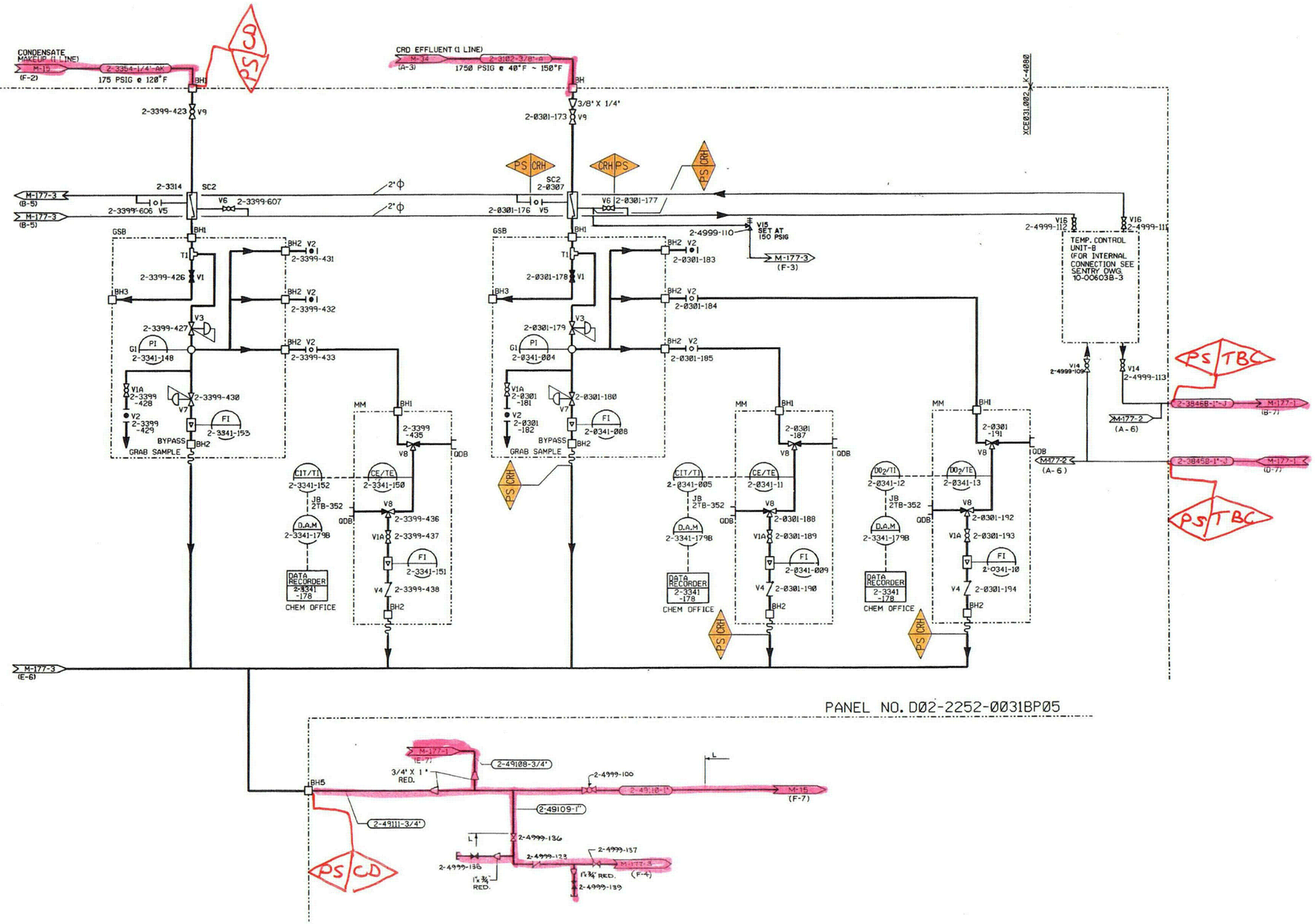

CD= CONDENSATE AND CONDENSATE STORAGE

TBC=TBCCW

CRH PS — LR SYSTEM BOUNDARY BREAKS

CRH = CONTROL ROD DRIVE HYDRAULIC
PS = PROCESS SAMPLING

OUT OF SCOPE COMPONENTS

REV	DATE	DESCRIPTION	PREP.	REVR.	APPR.
0	11/18/02	INITIAL ISSUE	RMD	JSL	MAH

Exelon. Nuclear
Dresden Station

LICENSE RENEWAL BOUNDARY DIAGRAM OF PROCESS SAMPLING PART 1 TURBINE BLDG SAMPLE PANEL B

LR-DRE-M-177-4

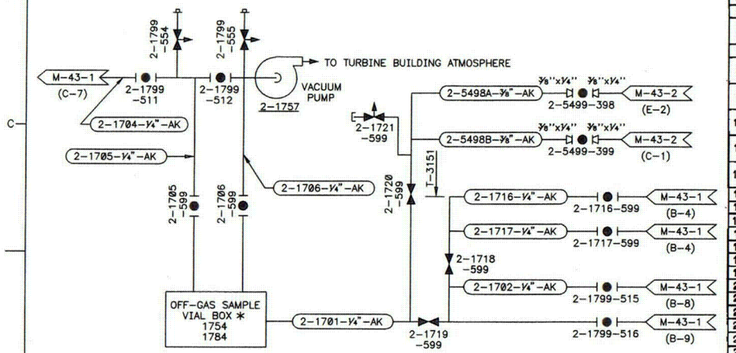

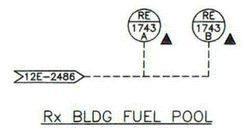

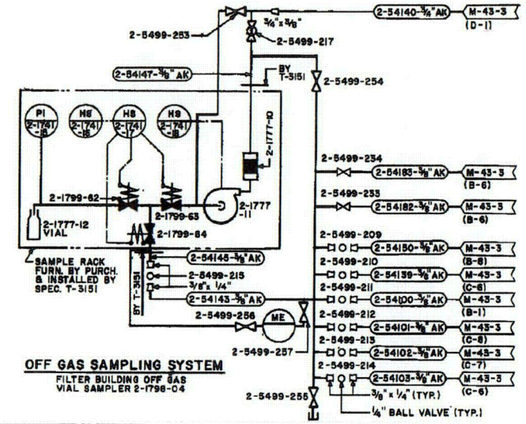

No.	LOCATION	ELEV	VALVE 8507-	VALVE 8599-
1	VENT RETURN OPENING NEAR Rx BELL SEAL	588'	500	629
2	Rx VENT HEAD (=33'-N30)	588'	501	630
3	NIB NOZZLE	546'	502	631
4	HPCI LINE NEAR STAIRWAY TO 588'	572'	503	632
5	ISO-CONDENSER VALVE 1301-2	572'	504	633
6	ELECTROMATIC RELIEF VALVES OVER STEAM LINES A/B	572'	505	634
7	165" NEAR N. CORESPRAY	572'	506	635
8	ELECTROMATIC RELIEF VALVES OVER STEAM LINES C/D	555'	507	636
9	MO-2-202-6A, REC., LOOP CROSSTE NEAR VALVE BON.	534'	508	637
10	MO-2-202-6B, REC., LOOP CROSSTE NEAR VALVE BON.	534'	509	638
11	MO-2-202-4A REC. PUMP SUCTION NEAR VALVE BON.	509'	510	639
12	MO-2-202-4B REC. PUMP SUCTION NEAR VALVE BON.	515'	511	640
13	REC. PUMP 2A, SHAFT SEAL	513'	512	641
14	REC. PUMP 2B, SHAFT SEAL	513'	513	642
15	MO-2-202-5A, RECIRC. PUMP DISCHARGE	513'	514	643
16	BIOSHIELD WALL 300° AZ.	518'	515	644
17	PRI. STM. ISOL. VALVES BETWEEN C/D	517'	516	645
18	PRI. STM. ISOL. VALVES BETWEEN D/A	517'	517	646
19	PRI. STM. ISOL. VALVES BETWEEN A/B	517'	518	647
20	CRD SUBPLE ROOM (=90° ON WALL)	510'	519	648
21	BIOSHIELD WALL 285° AZ.	520'	520	649
22	BIOSHIELD WALL 120° AZ.	521'	521	650
23	TORUS		522	651
24	STEAM TUNNEL SAMPLE	518'-6"	523	652
25	2G DRYWELL COOLER INTAKE LOUVER		524	NONE
26	2E DRYWELL COOLER INTAKE LOUVER		525	654

PRIMARY CONTAINMENT AIR SAMPLE LOCATION TABULATION

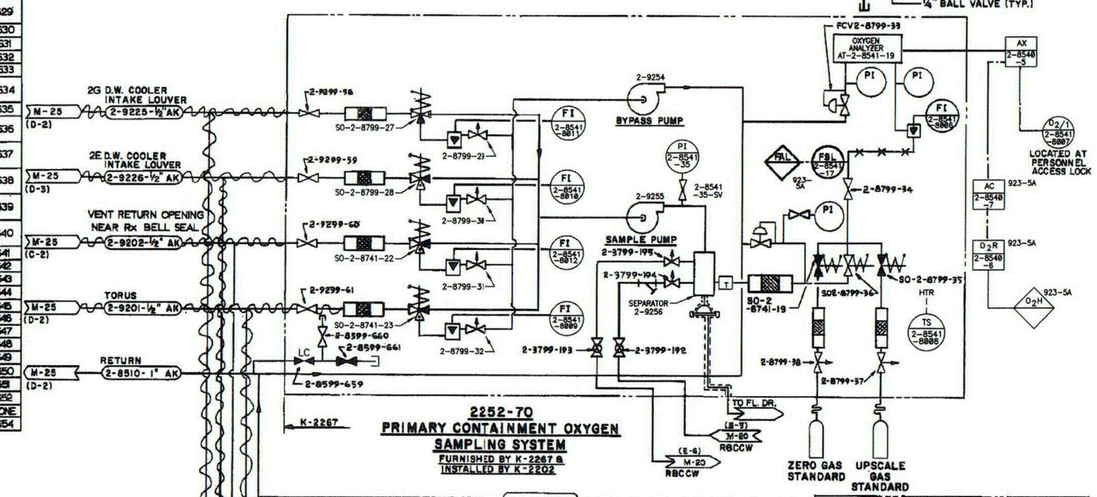

LOCATION	APPROX. ELEV.	COL. ROW DESIG.
AIR EJECTOR COMPARTMENT "A" MIDDLE OF ROOM	565'-0"	37-D
AIR EJECTOR COMPARTMENT "B" MIDDLE OF ROOM	565'-0"	39-D
TURBINE BUILDING EXHAUST DUCT	558'-0"	40-C
TURBINE PEDESTAL NORTH OF MAIN STEAM STOP VALVES	550'-0"	41-F
CONCRETE BEAM OVER TURB. BY-PASS	550'-0"	41-G
TURBINE PEDESTAL SOUTH OF AND ON OF "B" LOW PRESS. CYLINDER	546'-0"	36-F
"D" HIGH PRESS. HTR. COMPARTMENT AT CEILING BETWEEN HTRS. 2-D1 & 2	557'-0"	39-G
NORTH CONDENSATE DEMINERALIZER ROOM AND CEILING	531'-0"	41-C
SOUTH CONDENSATE DEMINERALIZER ROOM AND CEILING	531'-0"	41-D
CONDENSATE DEMINERALIZER REGENERATIVE ROOM AND CEILING	530'-6"	"D" BETWEEN 42 & 43
UNDER WEST END OF TURB. PEDESTAL BETWEEN HIGH PRESS. CYL. & MOIST. SEP.	551'-0"	42 AT TURB. ℄
NORTHWEST VERTICAL PEDESTAL SUPPORT "A" LOW PRESSURE TURBINE	525'-0"	40-E
NORTHWEST VERTICAL PEDESTAL SUPPORT "B" LOW PRESSURE TURBINE	525'-0"	39-E
NORTHWEST VERTICAL PEDESTAL SUPPORT "C" LOW PRESSURE TURBINE	525'-0"	37-E
UNDER CONDENSER HOTWELL IN CONDENSER PIT ROOM AT CENTER	481'-0	38-E
PITOT TUBE IN VENT DUCT UPSTREAM OF RADWASTE EXHAUST FAN	538'-0"	42-43
PITOT TUBE IN VENT DUCT DOWN-STREAM OF RADWASTE EXHAUST FAN	538'-0"	42-43
CEILING OF EAST HOPPER	541'-0"	42-C
CEILING OF WEST HOPPER	541'-0"	42-C
CEILING OF SOLID WASTE LOADING AREA BETWEEN MIX. STA. & DRUM EL.	528'-0"	41-C
PITOT TUBE IN EXHAUST DUCT FROM RADWASTE FILTER	A THRU E 528'-6"	BETWEEN 45 & 46
PITOT TUBE IN EXHAUST DUCT FROM SPENT RESIN TK. RM. & NEUT. TK. RM.	495'-0"	45-C
PITOT TUBE IN EXHAUST DUCT FROM CONCENTRATOR FEED PREHEATER COMP.	528'-6"	BETWEEN 45 & 46

TURBINE BUILDING AIR PARTICULATE SAMPLE LOCATION TABULATION

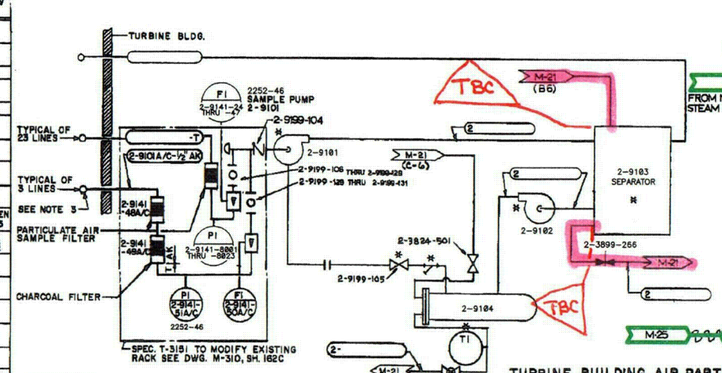

(CONTINUED)

LOCATION	APPROX. ELEV.	COL. ROW DESIG.	LINE NO.	SAMPLE POINT NO.
OFF GAS CONDENSER 2A CUBICLE	605'-0"	38-D	2-9101A-1/2" AK	26
OFF GAS CONDENSER & CATALYTIC RECOMBINER 2B CUBICLE	586'-0"	39-D	2-9101B-1/2" AK	24
OFF GAS CATALYTIC RECOMBINER 2A CUBICLE	586'-0"	36-D	2-9101C-1/2" AK	25
SPARE				29
SPARE				30

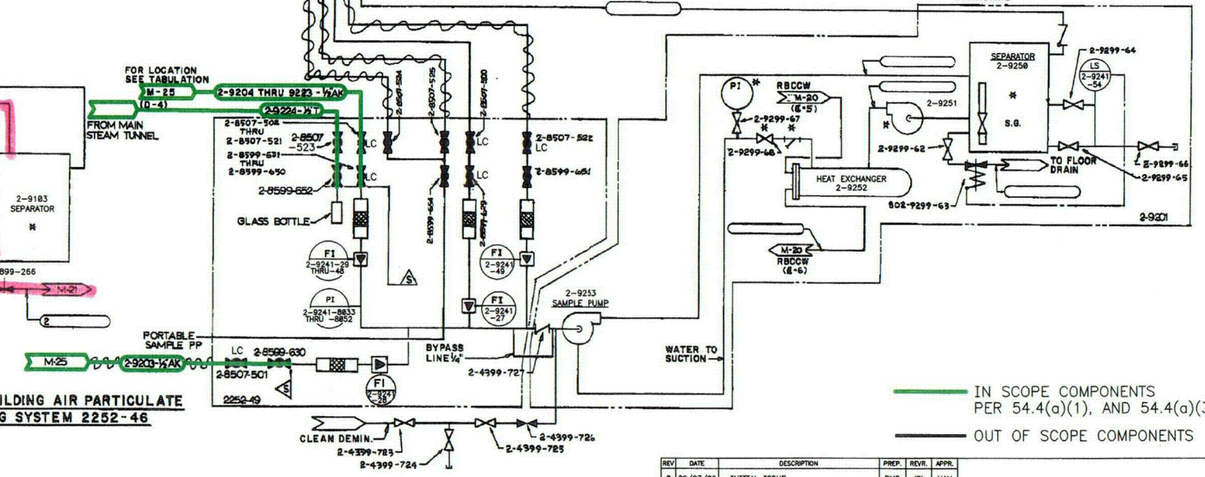

IN SCOPE COMPONENTS PER 54.4(a)(1), AND 54.4(a)(3)

OUT OF SCOPE COMPONENTS

REV	DATE	DESCRIPTION	PREP.	REVR.	APPR.
0	09/23/02	INITIAL ISSUE	RMD	JSL	MAH

Exelon. Nuclear
Dresden Station

LICENSE RENEWAL BOUNDARY DIAGRAM OF PROCESS SAMPLING PART 2

LR-DRE-M-178

LR-DRE-M-269-3

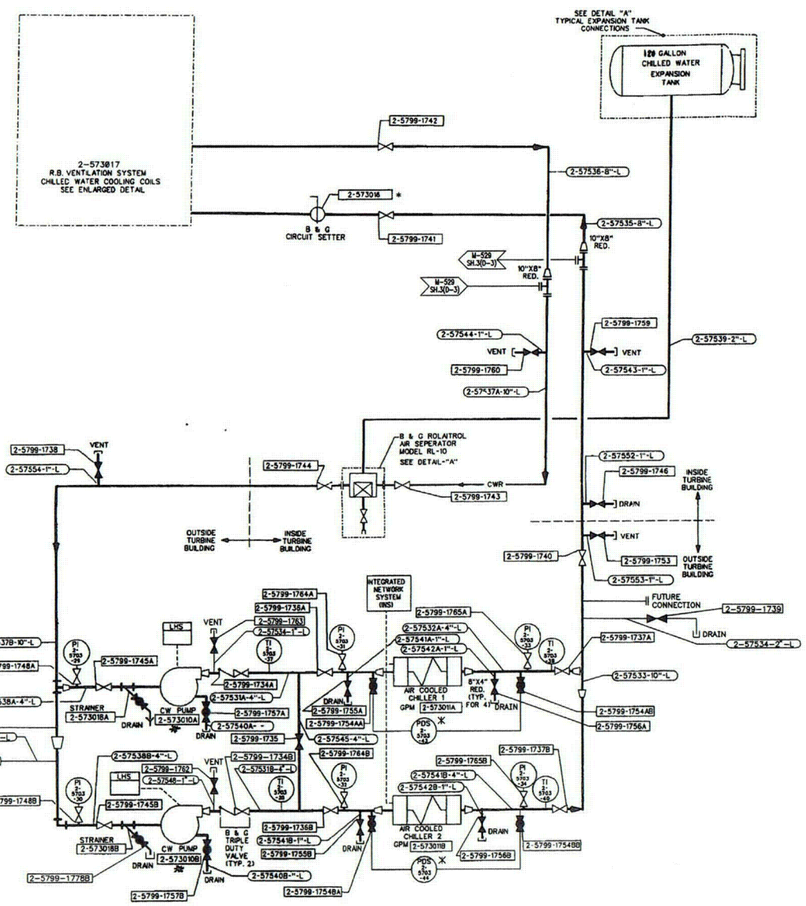

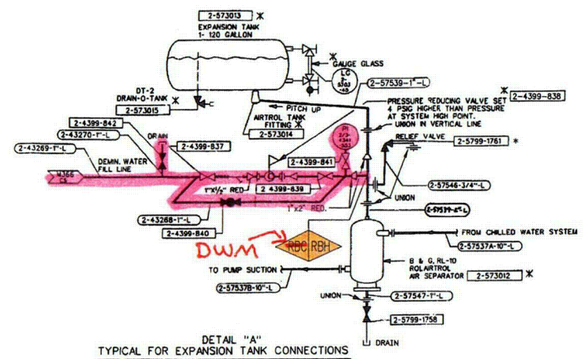

DETAIL "A"
TYPICAL FOR EXPANSION TANK CONNECTIONS

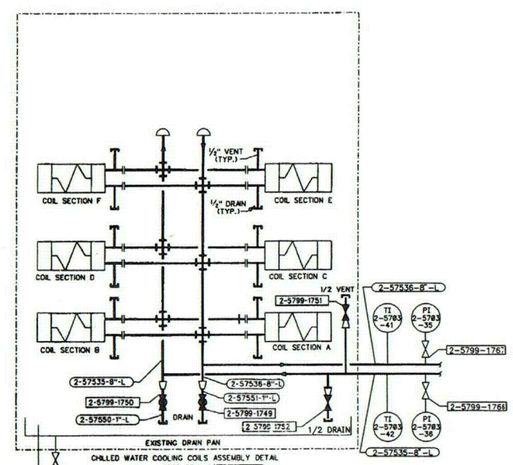

2-5799-1779
TO TURBINE BUILDING FLOOR DRAINS
2-5799-1780
2-5799-1781
TO TURBINE BUILDING ROOF DRAINS

DWM RBC RBH LR SYSTEM BOUNDARY BREAKS
DWM= DEMIN. WATER MAKEUP
~~RBC = REACTOR BUILDING CHILLED WATER~~
RBH = REACTOR BUILDING HVAC

OUT OF SCOPE COMPONENTS

REV	DATE	DESCRIPTION	PREP.	REVR.	APPR.
0	09/23/02	INITIAL ISSUE	RMD	JSL	MAH

Exelon. Nuclear
Dresden Station

LICENSE RENEWAL BOUNDARY
DIAGRAM OF
REACTOR BUILDING
CHILLED WATER SYSTEM

LR-DRE-M-269-3

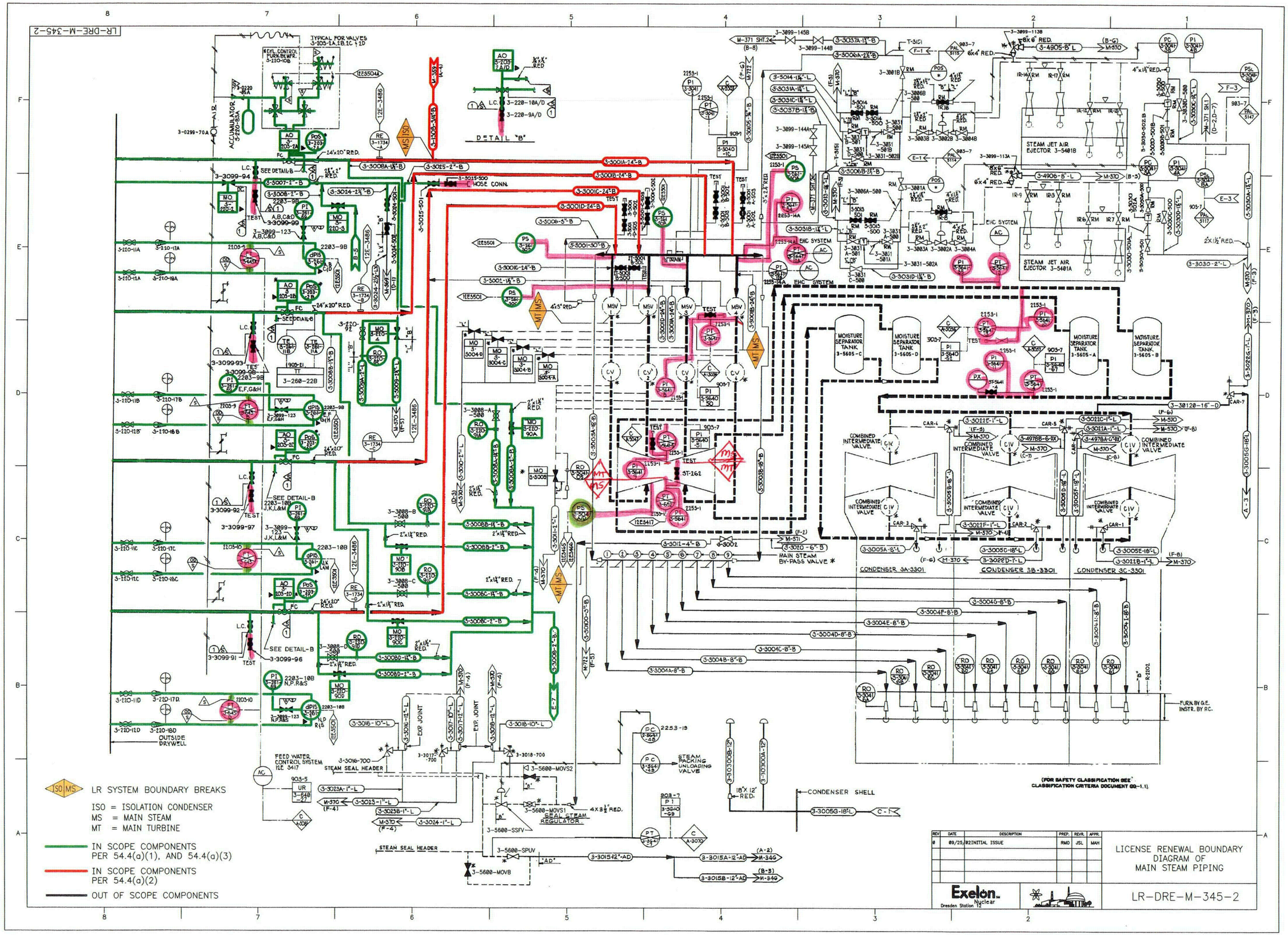
LR-DRE-M-345-2
TYPICAL FOR VALVES 3-205-2A,2B,2C & 2D
DETAIL "B"
HOSE CONN.
STEAM JET AIR EJECTOR 3-5401B
STEAM JET AIR EJECTOR 3-5401A
EHC SYSTEM
MOISTURE SEPARATOR TANK 3-5605-C
MOISTURE SEPARATOR TANK 3-5605-D
MOISTURE SEPARATOR TANK 3-5605-A
MOISTURE SEPARATOR TANK 3-5605-B
COMBINED INTERMEDIATE VALVE
MAIN STEAM BY-PASS VALVE
CONDENSER 3A-3301
CONDENSER 3B-3301
CONDENSER 3C-3301
FURN. BY G.E. INSTR. BY R.C.
(FOR SAFETY CLASSIFICATION SEE CLASSIFICATION CRITERIA DOCUMENT GQ-1.1)
OUTSIDE DRYWELL
FEED WATER CONTROL SYSTEM 12E 3417
STEAM SEAL HEADER
STEAM PACKING UNLOADING VALVE
CONDENSER SHELL
SEAL STEAM REGULATOR
LR SYSTEM BOUNDARY BREAKS
ISO = ISOLATION CONDENSER
MS = MAIN STEAM
MT = MAIN TURBINE
IN SCOPE COMPONENTS PER 54.4(a)(1), AND 54.4(a)(3)
IN SCOPE COMPONENTS PER 54.4(a)(2)
OUT OF SCOPE COMPONENTS
REV DATE DESCRIPTION PREP. REVR. APPR.
0 09/25/02 INITIAL ISSUE RMD JSL MAH
LICENSE RENEWAL BOUNDARY DIAGRAM OF MAIN STEAM PIPING
Exelon Nuclear
Dresden Station 12
LR-DRE-M-345-2

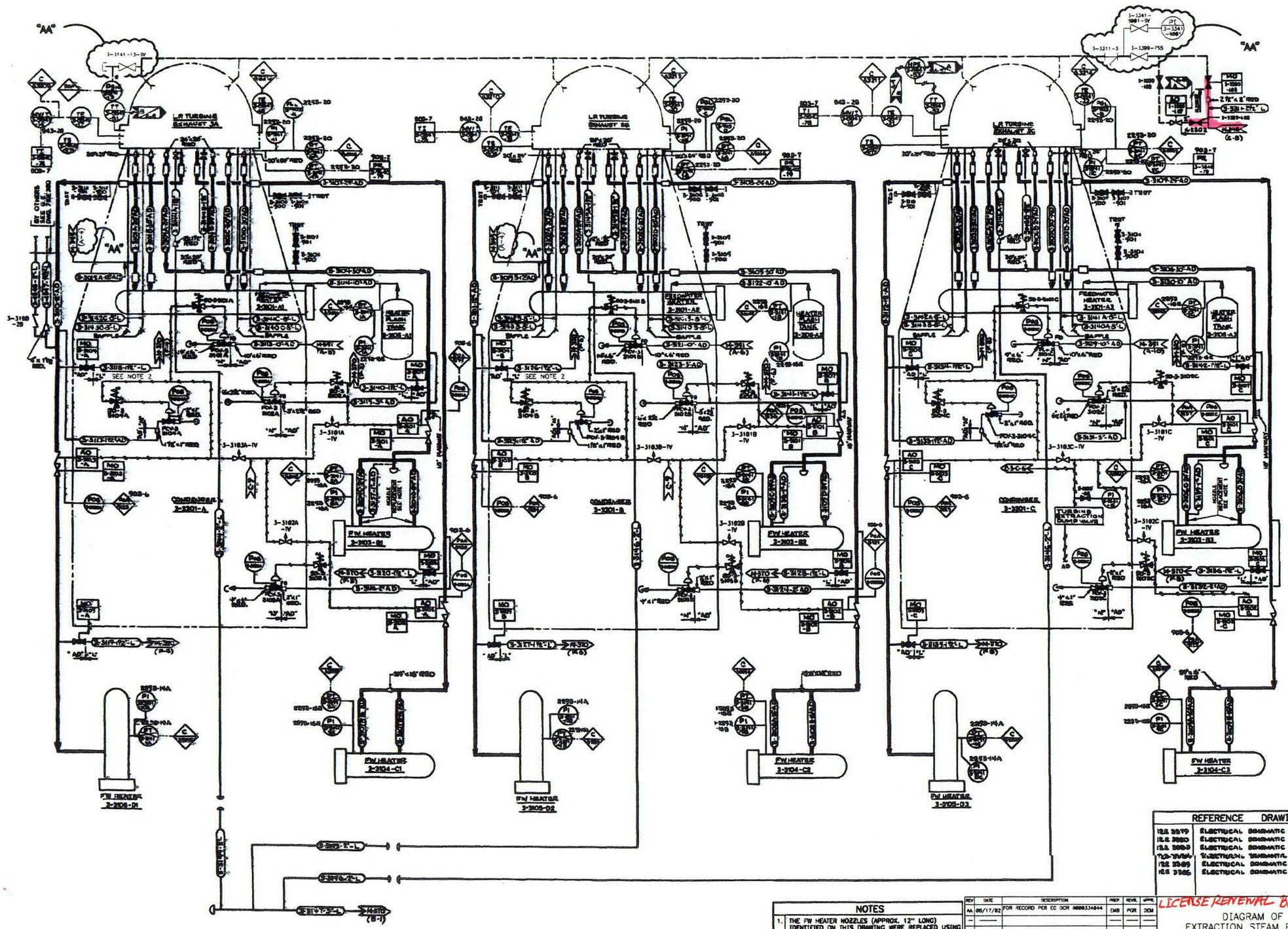

REFERENCE DRAWINGS	
12E 3379	ELECTRICAL SCHEMATIC REFERENCE
12E 3380	ELECTRICAL SCHEMATIC REFERENCE
12E 3383	ELECTRICAL SCHEMATIC REFERENCE
12E 3384	ELECTRICAL SCHEMATIC REFERENCE
12E 3385	ELECTRICAL SCHEMATIC REFERENCE
12E 3386	ELECTRICAL SCHEMATIC REFERENCE

NOTES

1. THE FW HEATER NOZZLES (APPROX. 12" LONG) IDENTIFIED ON THIS DRAWING WERE REPLACED USING PIPING MATERIAL, ASME SA-312 TP 304L STAINLESS STEEL, HAVING A PIPE WALL THICKNESS OF 0.500".
2. PORTION OF PIPING REPLACED WITH CHROMEMOLY (ACCEPTABLE PER SPEC K4080, SECT. 1501.19D) (REF. ER 9906143 & ER 9906133).

REV	DATE	DESCRIPTION	PREP.	REVR.	APPR.
AA	06/17/02	FOR RECORD PER EC DCR 0000334044	EMB	PGR	DEM

Exelon. Nuclear
Dresden Station 12 Unit 3

LICENSE RENEWAL BOUNDARY

DIAGRAM OF EXTRACTION STEAM PIPING

SCALE : NONE
DATE :
DRAWN BY :
DRG. BY : C502

LR-DRE-M-346

SHEET NUMBER:

SIZE: F

M05

12 03 AA 17JU02 A D

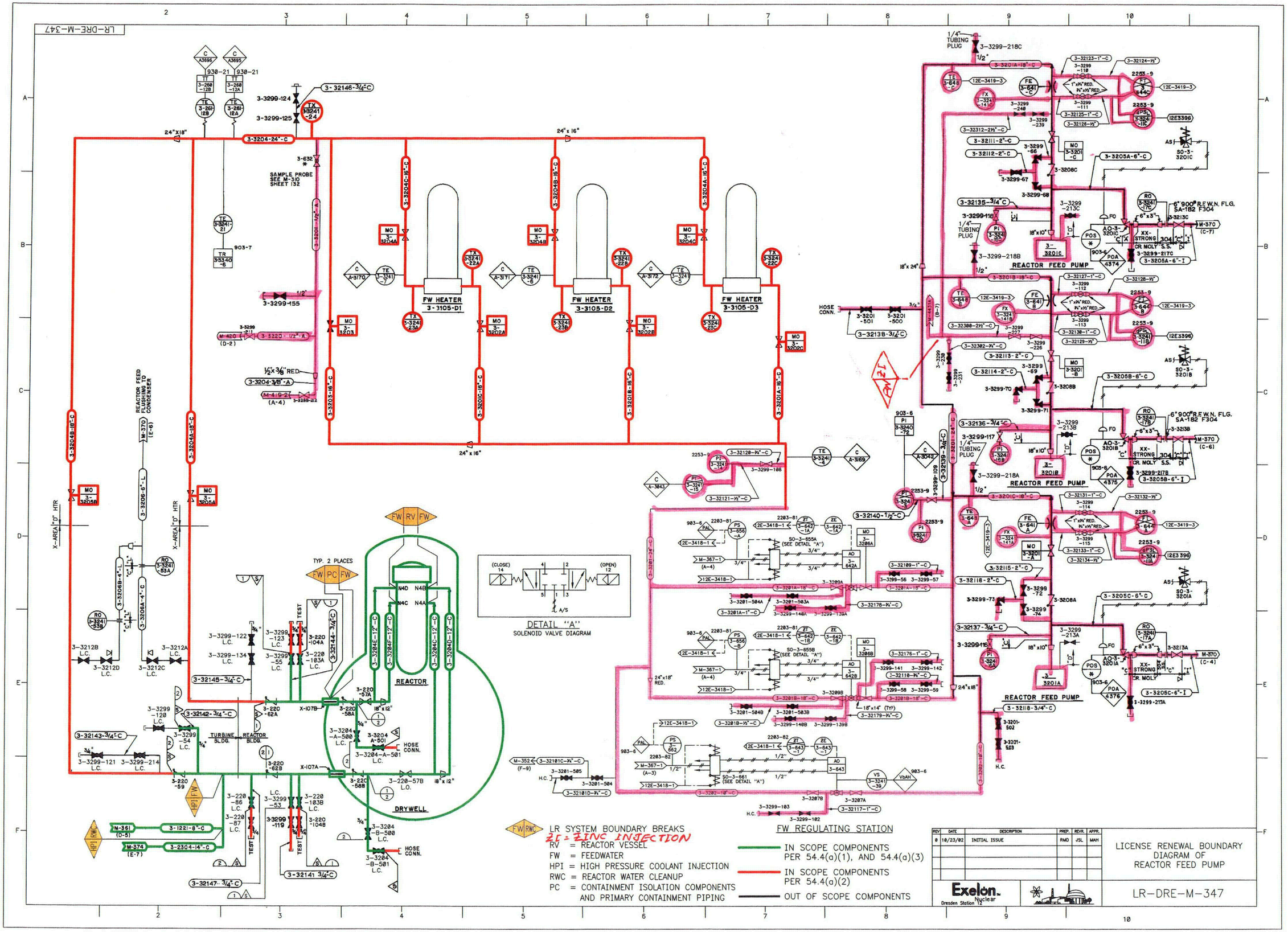
LR-DRE-M-347
FW HEATER 3-3105-D1
FW HEATER 3-3105-D2
FW HEATER 3-3105-D3
REACTOR FEED PUMP
REACTOR FEED PUMP
REACTOR FEED PUMP
REACTOR
DRYWELL
TURBINE BLDG.
REACTOR BLDG.
REACTOR FEED FLUSHING TO CONDENSER
SAMPLE PROBE SEE M-310 SHEET 132
TYP. 2 PLACES
DETAIL "A"
SOLENOID VALVE DIAGRAM
LR SYSTEM BOUNDARY BREAKS
ZC = ZINC INJECTION
RV = REACTOR VESSEL
FW = FEEDWATER
HPI = HIGH PRESSURE COOLANT INJECTION
RWC = REACTOR WATER CLEANUP
PC = CONTAINMENT ISOLATION COMPONENTS AND PRIMARY CONTAINMENT PIPING
FW REGULATING STATION
IN SCOPE COMPONENTS PER 54.4(a)(1), AND 54.4(a)(3)
IN SCOPE COMPONENTS PER 54.4(a)(2)
OUT OF SCOPE COMPONENTS
REV DATE DESCRIPTION PREP. REVR. APPR.
0 10/23/02 INITIAL ISSUE RMD JSL MAH
Exelon. Nuclear
Dresden Station
LICENSE RENEWAL BOUNDARY DIAGRAM OF REACTOR FEED PUMP
LR-DRE-M-347

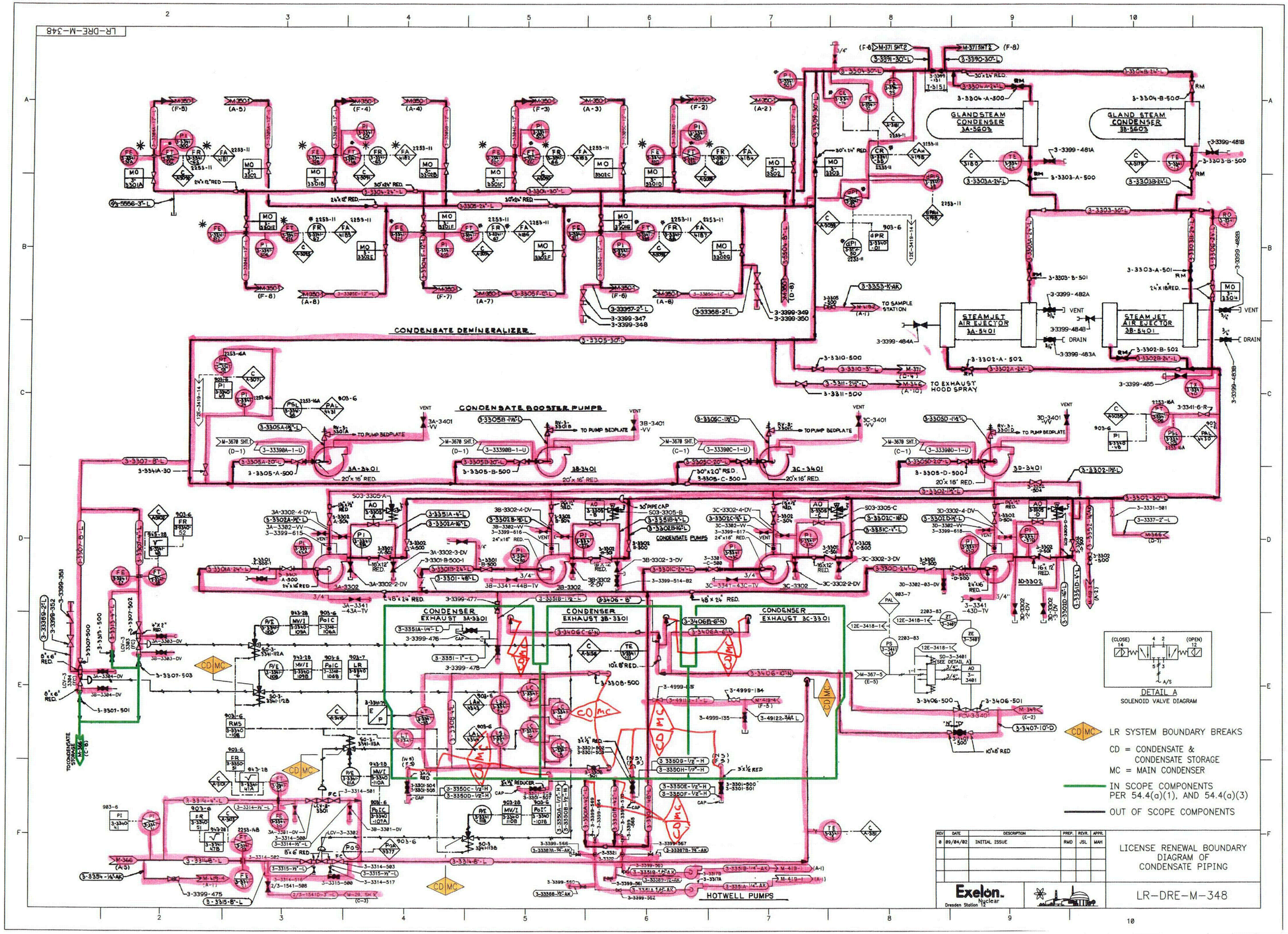
LR-DRE-M-348
CONDENSATE DEMINERALIZER
CONDENSATE BOOSTER PUMPS
CONDENSATE PUMPS
GLAND STEAM CONDENSER 3A-5603
GLAND STEAM CONDENSER 3B-5603
STEAM JET AIR EJECTOR 3A-5401
STEAM JET AIR EJECTOR 3B-5401
CONDENSER EXHAUST 3A-3301
CONDENSER EXHAUST 3B-3301
CONDENSER EXHAUST 3C-3301
HOTWELL PUMPS
TO SAMPLE STATION
TO EXHAUST HOOD SPRAY
TO PUMP BEDPLATE
TO CONDENSATE STORAGE
DETAIL A
SOLENOID VALVE DIAGRAM
LR SYSTEM BOUNDARY BREAKS
CD = CONDENSATE & CONDENSATE STORAGE
MC = MAIN CONDENSER
IN SCOPE COMPONENTS PER 54.4(a)(1), AND 54.4(a)(3)
OUT OF SCOPE COMPONENTS
REV DATE DESCRIPTION PREP. REVR. APPR.
0 09/04/02 INITIAL ISSUE RMD JSL MAH
LICENSE RENEWAL BOUNDARY DIAGRAM OF CONDENSATE PIPING
Exelon. Nuclear
Dresden Station 12
LR-DRE-M-348

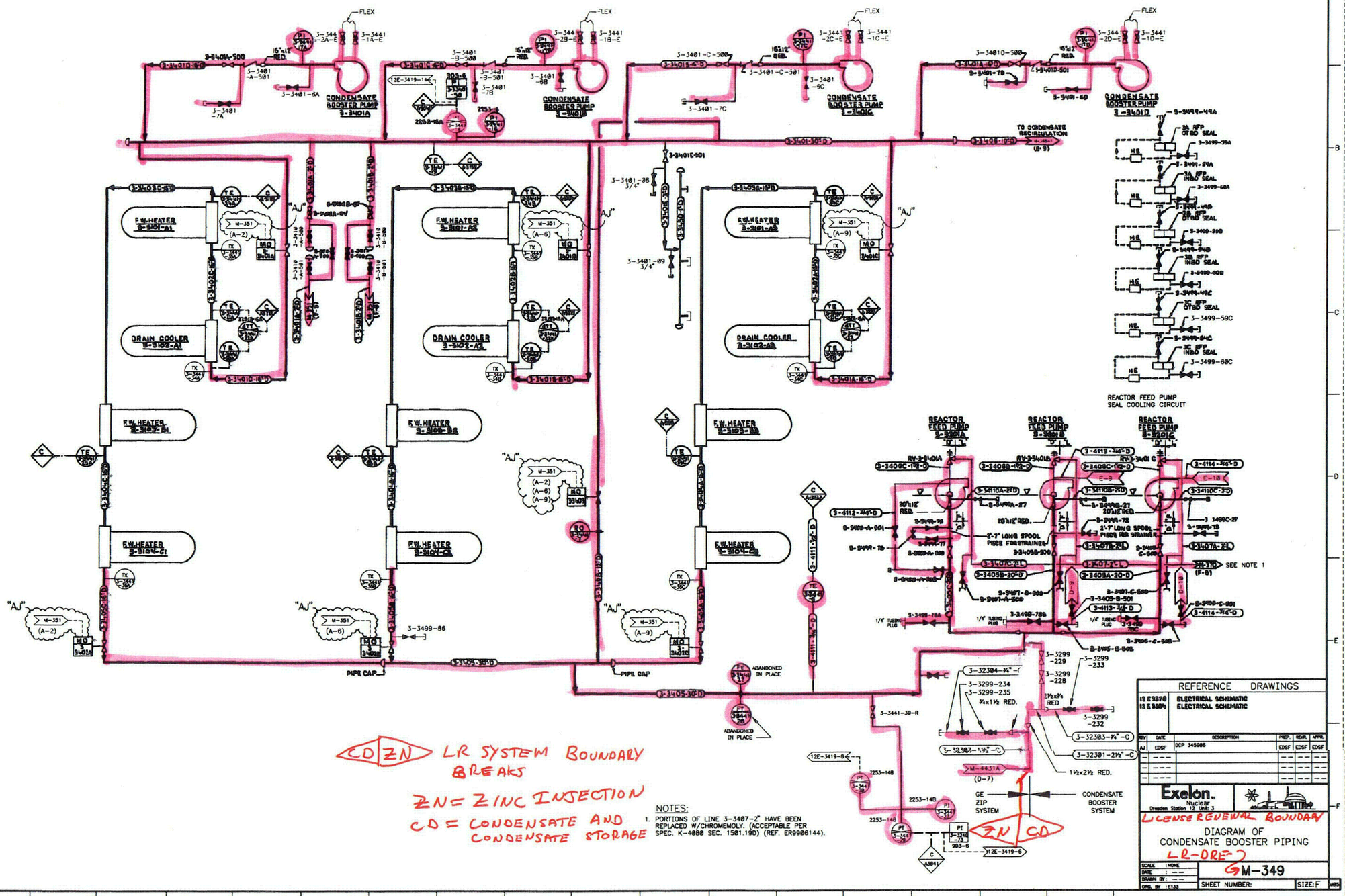

CD ZN LR SYSTEM BOUNDARY BREAKS

ZN = ZINC INJECTION

CD = CONDENSATE AND CONDENSATE STORAGE

NOTES:

1. PORTIONS OF LINE 3-3407-2" HAVE BEEN REPLACED W/CHROMEMOLY. (ACCEPTABLE PER SPEC. K-4080 SEC. 1501.19D) (REF. ER9906144).

REFERENCE DRAWINGS

18 E 3370	ELECTRICAL SCHEMATIC
18 E 3384	ELECTRICAL SCHEMATIC

REV	DATE	DESCRIPTION	PREP.	REVR.	APPR.
AJ	EDSF	DCP 345986	EDSF	EDSF	EDSF

Exelon. Nuclear
Dresden Station 12 Unit 3

LICENSE RENEWAL BOUNDARY

DIAGRAM OF CONDENSATE BOOSTER PIPING

LR-DRE-7

SCALE : NONE
DATE : ---
DRAWN BY : ---
ORG. BY : E133

M-349

SHEET NUMBER: SIZE: F

12 03 AJ EDSF A D

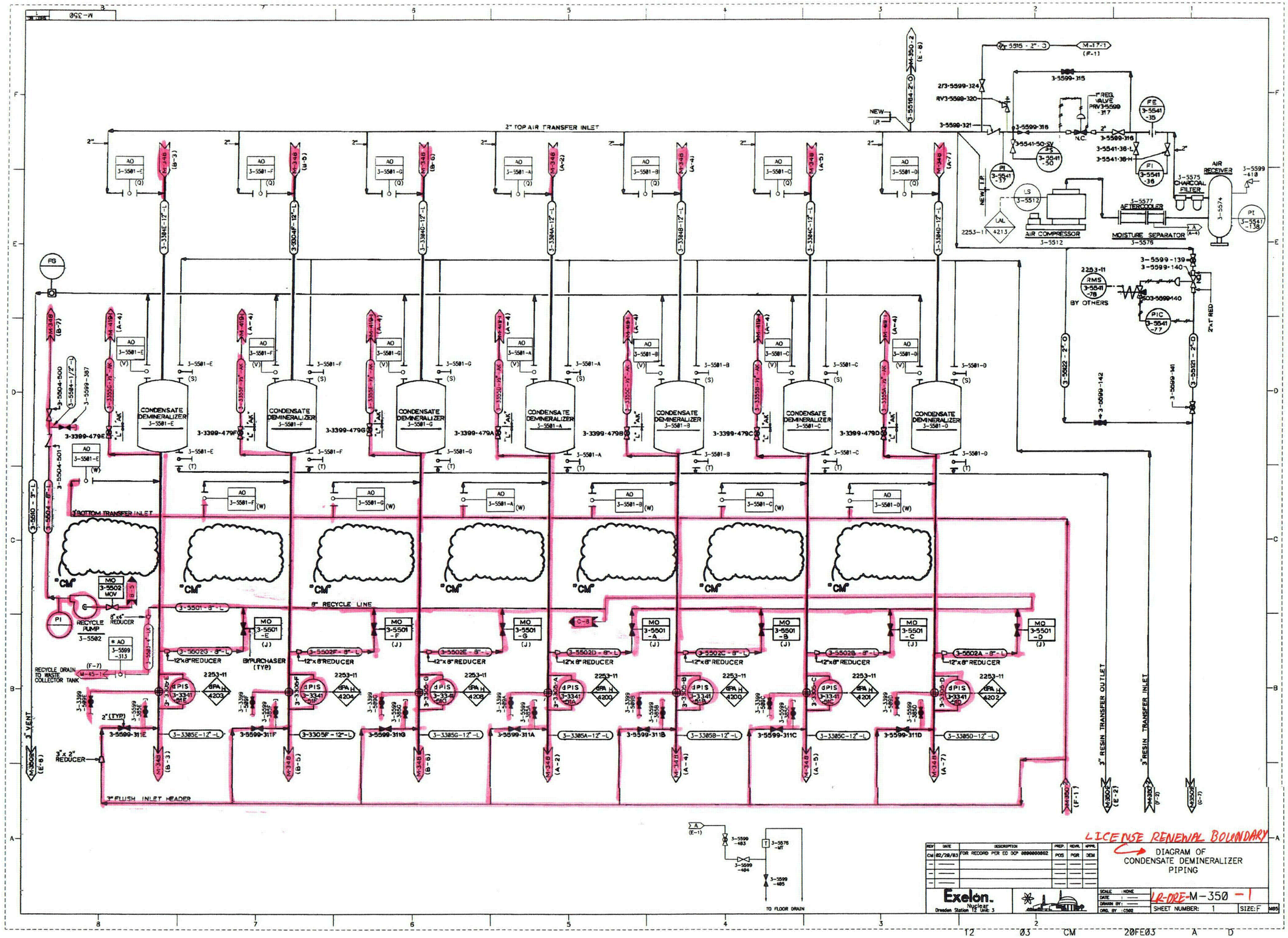
2" TOP AIR TRANSFER INLET
3" BOTTOM TRANSFER INLET
8" RECYCLE LINE
3" FLUSH INLET HEADER
CONDENSATE DEMINERALIZER 3-5501-E
CONDENSATE DEMINERALIZER 3-5501-F
CONDENSATE DEMINERALIZER 3-5501-G
CONDENSATE DEMINERALIZER 3-5501-A
CONDENSATE DEMINERALIZER 3-5501-B
CONDENSATE DEMINERALIZER 3-5501-C
CONDENSATE DEMINERALIZER 3-5501-D
RECYCLE PUMP 3-5502
AIR COMPRESSOR 3-5512
MOISTURE SEPARATOR 3-5576
AFTERCOOLER 3-5577
CHARCOAL FILTER 3-5575
AIR RECEIVER 3-5574
3" RESIN TRANSFER OUTLET
3" RESIN TRANSFER INLET
TO FLOOR DRAIN
LICENSE RENEWAL BOUNDARY
DIAGRAM OF CONDENSATE DEMINERALIZER PIPING
Exelon. Nuclear
Dresden Station 12 Unit 3
LR-DRE-M-350-1
SHEET NUMBER: 1
SIZE: F

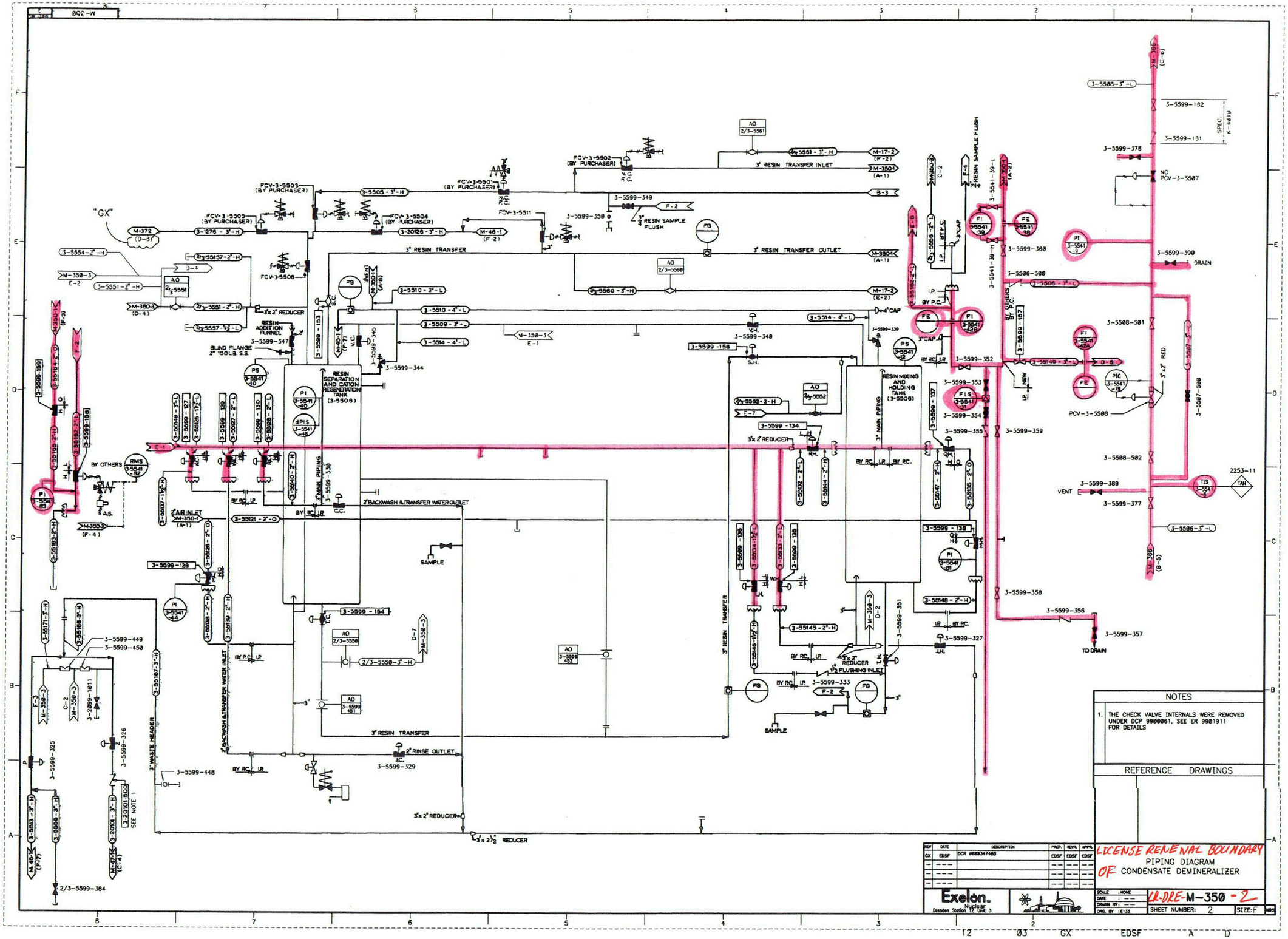

NOTES

1. THE CHECK VALVE INTERNALS WERE REMOVED UNDER DCP 9900061, SEE ER 9901911 FOR DETAILS

REFERENCE DRAWINGS

REV	DATE	DESCRIPTION	PREP.	REVR.	APPR.
GX	EDSF	DCR 0000347480	EDSF	EDSF	EDSF

LICENSE RENEWAL BOUNDARY OF

PIPING DIAGRAM
CONDENSATE DEMINERALIZER

Exelon. Nuclear
Dresden Station 12 Unit 3

SCALE : NONE
DATE : --
DRAWN BY : --
DRG. BY : E133

LR-DRE-M-350-2

SHEET NUMBER: 2 SIZE: F

12 03 GX EDSF A D

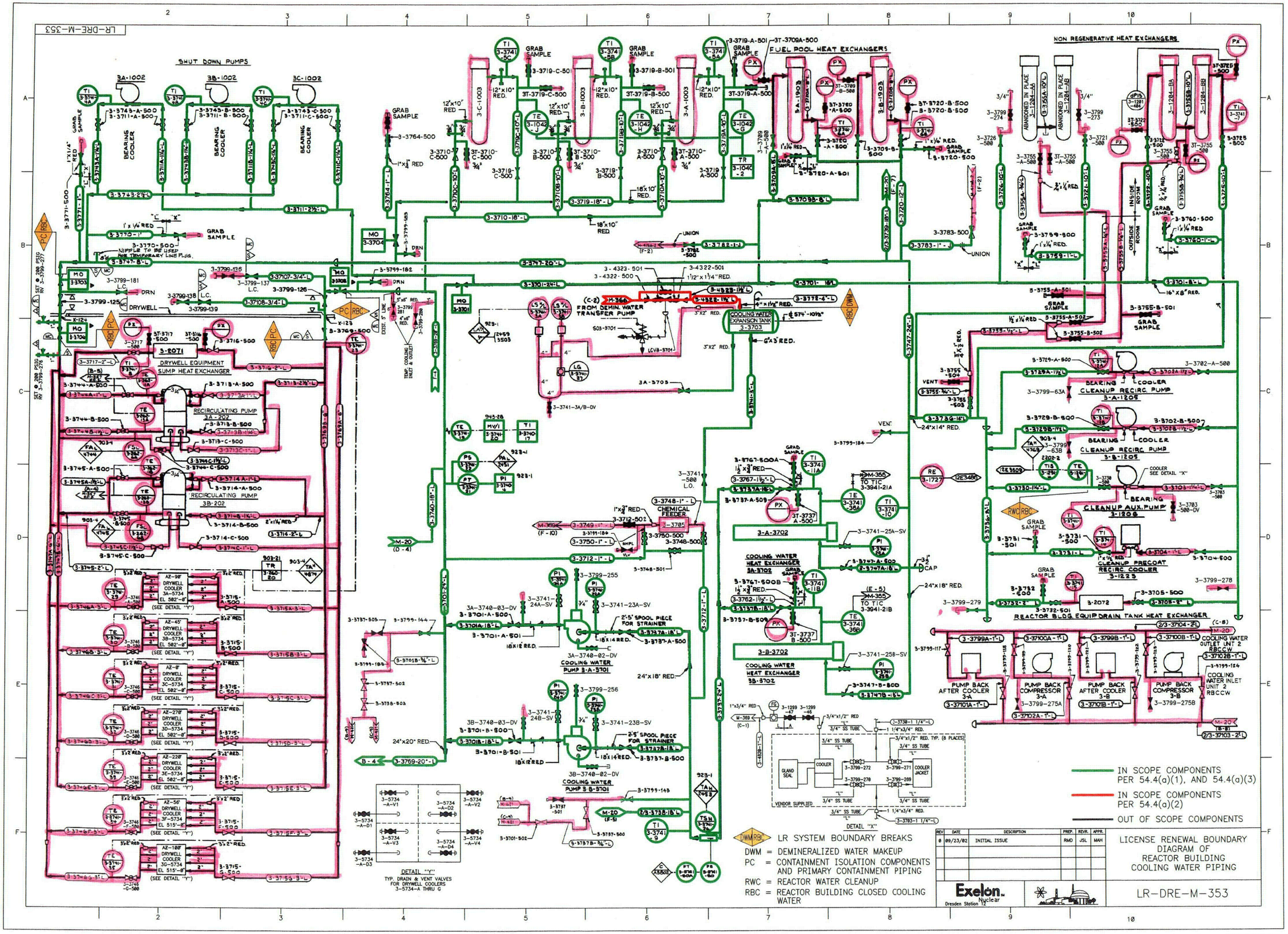
LR-DRE-M-353
SHUT DOWN PUMPS
3A-1002
3B-1002
3C-1002
BEARING COOLER
FUEL POOL HEAT EXCHANGERS
NON REGENERATIVE HEAT EXCHANGERS
ABANDONED IN PLACE
DRYWELL EQUIPMENT SUMP HEAT EXCHANGER
RECIRCULATING PUMP 3A-202
RECIRCULATING PUMP 3B-202
DRYWELL
(C-2) M-366 FROM DEMIN. WATER TRANSFER PUMP
COOLING WATER EXPANSION TANK 3-3703
CHEMICAL FEEDER
COOLING WATER HEAT EXCHANGER 3A-3702
COOLING WATER HEAT EXCHANGER 3B-3702
COOLING WATER PUMP 3-A-3701
COOLING WATER PUMP 3-B-3701
TO TIC 3-3941-21A
TO TIC 3-3941-21B
BEARING COOLER CLEANUP RECIRC. PUMP 3-A-1205
BEARING COOLER CLEANUP RECIRC. PUMP 3-B-1205
CLEANUP AUX. PUMP 3-1206
CLEANUP PRECOAT RECIRC. COOLER 3-1225
REACTOR BLDG. EQUIP DRAIN TANK HEAT EXCHANGER
PUMP BACK AFTER COOLER 3-A
PUMP BACK COMPRESSOR 3-A
PUMP BACK AFTER COOLER 3-B
PUMP BACK COMPRESSOR 3-B
COOLING WATER OUTLET UNIT 2 RBCCW
COOLING WATER INLET UNIT 2 RBCCW
INSIDE ROOM
OUTSIDE ROOM
DETAIL "Y"
TYP. DRAIN & VENT VALVES FOR DRYWELL COOLERS 3-5734-A THRU G
DETAIL "X"
VENDOR SUPPLIED
GLAND SEAL
COOLER
COOLER JACKET
IN SCOPE COMPONENTS PER 54.4(a)(1), AND 54.4(a)(3)
IN SCOPE COMPONENTS PER 54.4(a)(2)
OUT OF SCOPE COMPONENTS
LR SYSTEM BOUNDARY BREAKS
DWM = DEMINERALIZED WATER MAKEUP
PC = CONTAINMENT ISOLATION COMPONENTS AND PRIMARY CONTAINMENT PIPING
RWC = REACTOR WATER CLEANUP
RBC = REACTOR BUILDING CLOSED COOLING WATER
REV | DATE | DESCRIPTION | PREP. | REVR. | APPR.
0 | 09/23/02 | INITIAL ISSUE | RMD | JSL | MAH
LICENSE RENEWAL BOUNDARY DIAGRAM OF REACTOR BUILDING COOLING WATER PIPING
Exelon. Nuclear
Dresden Station
LR-DRE-M-353

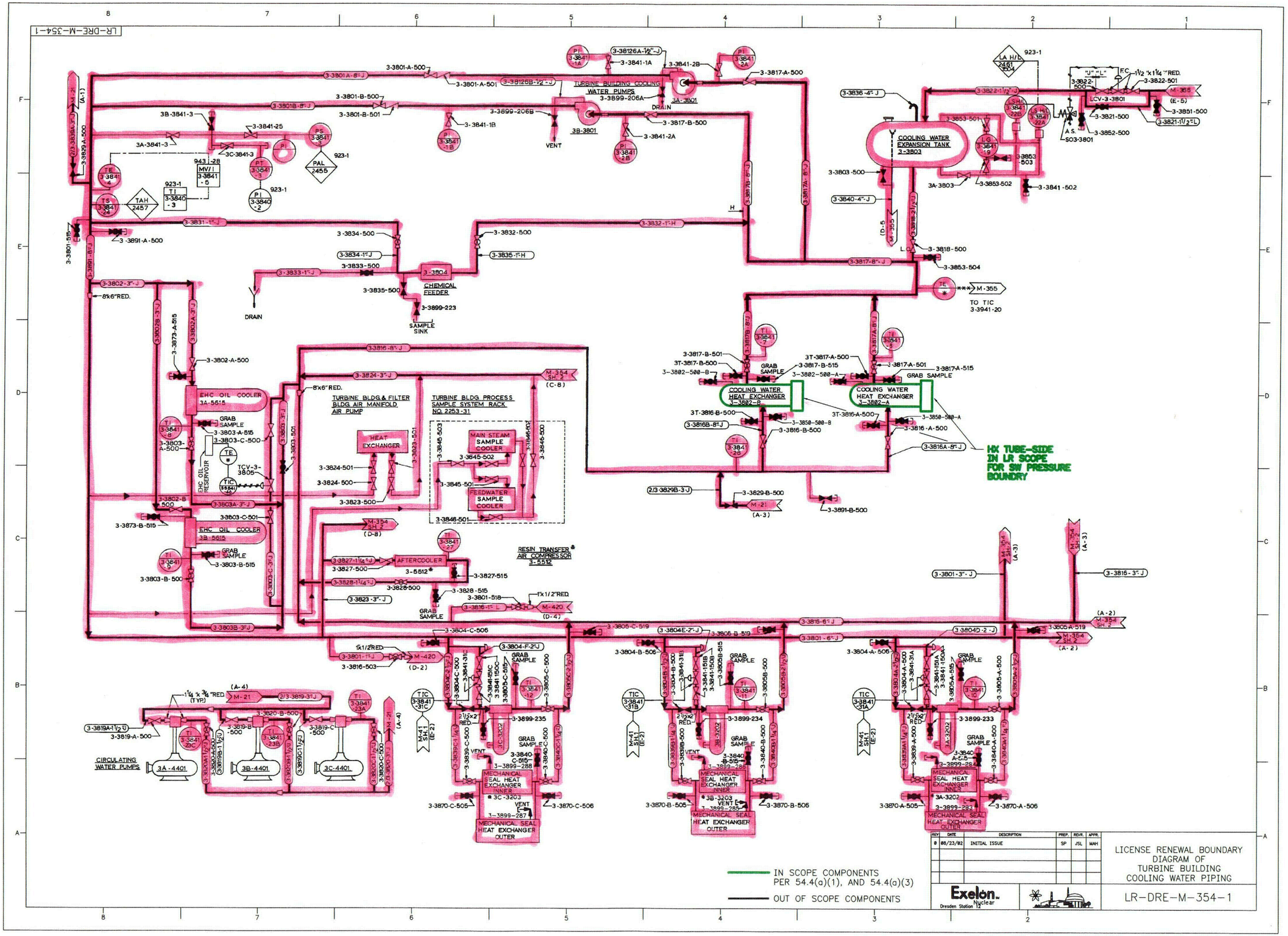

REV	DATE	DESCRIPTION	PREP.	REVR.	APPR.
0	08/23/02	INITIAL ISSUE	SP	JSL	MAH

LICENSE RENEWAL BOUNDARY DIAGRAM OF TURBINE BUILDING COOLING WATER PIPING

LR-DRE-M-354-1

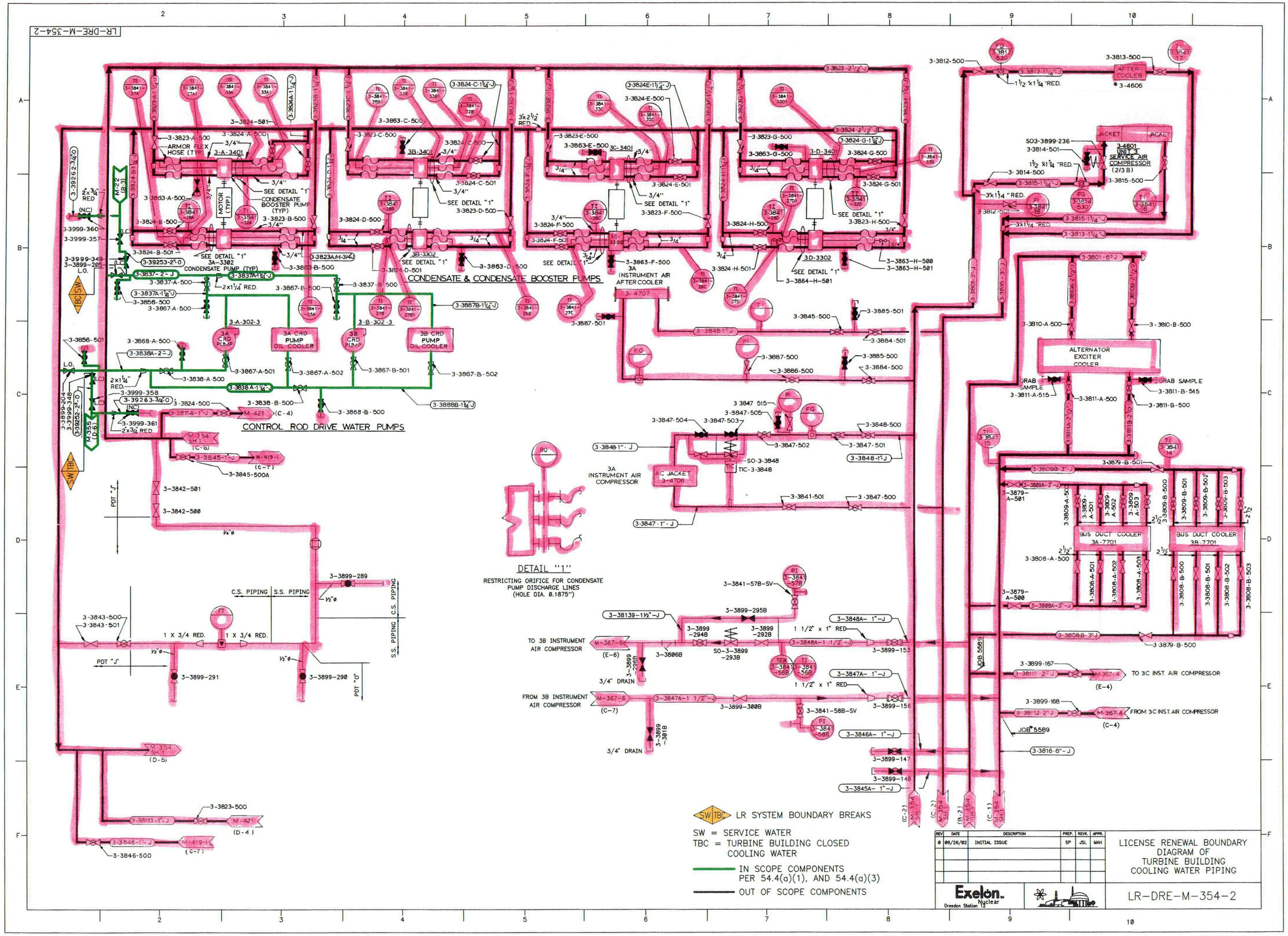
LR-DRE-M-354-2
CONDENSATE & CONDENSATE BOOSTER PUMPS
CONTROL ROD DRIVE WATER PUMPS
3A CRD PUMP
3A CRD PUMP OIL COOLER
3B CRD PUMP
3B CRD PUMP OIL COOLER
3A INSTRUMENT AIR AFTER COOLER
3A INSTRUMENT AIR COMPRESSOR
AC JACKET 3-4706
DETAIL "1"
RESTRICTING ORIFICE FOR CONDENSATE PUMP DISCHARGE LINES (HOLE DIA. 0.1875")
TO 3B INSTRUMENT AIR COMPRESSOR
FROM 3B INSTRUMENT AIR COMPRESSOR
3/4" DRAIN
1 1/2" x 1" RED
TO 3C INST. AIR COMPRESSOR
FROM 3C INST. AIR COMPRESSOR
ALTERNATOR EXCITER COOLER
GRAB SAMPLE
BUS DUCT COOLER 3A-7701
BUS DUCT COOLER 3B-7701
AFTER COOLER
3-4601 UNIT 3 SERVICE AIR COMPRESSOR (2/3 B)
ARMOR FLEX HOSE (TYP)
CONDENSATE BOOSTER PUMP (TYP)
CONDENSATE PUMP (TYP)
MOTOR (TYP)
SEE DETAIL "1"
C.S. PIPING
S.S. PIPING
1 X 3/4 RED.
PDT "J"
PDT "O"
LR SYSTEM BOUNDARY BREAKS
SW = SERVICE WATER
TBC = TURBINE BUILDING CLOSED COOLING WATER
IN SCOPE COMPONENTS PER 54.4(a)(1), AND 54.4(a)(3)
OUT OF SCOPE COMPONENTS
REV DATE DESCRIPTION PREP. REVR. APPR.
0 08/26/02 INITIAL ISSUE SP JSL MAH
LICENSE RENEWAL BOUNDARY DIAGRAM OF TURBINE BUILDING COOLING WATER PIPING
Exelon Nuclear
Dresden Station 12
LR-DRE-M-354-2

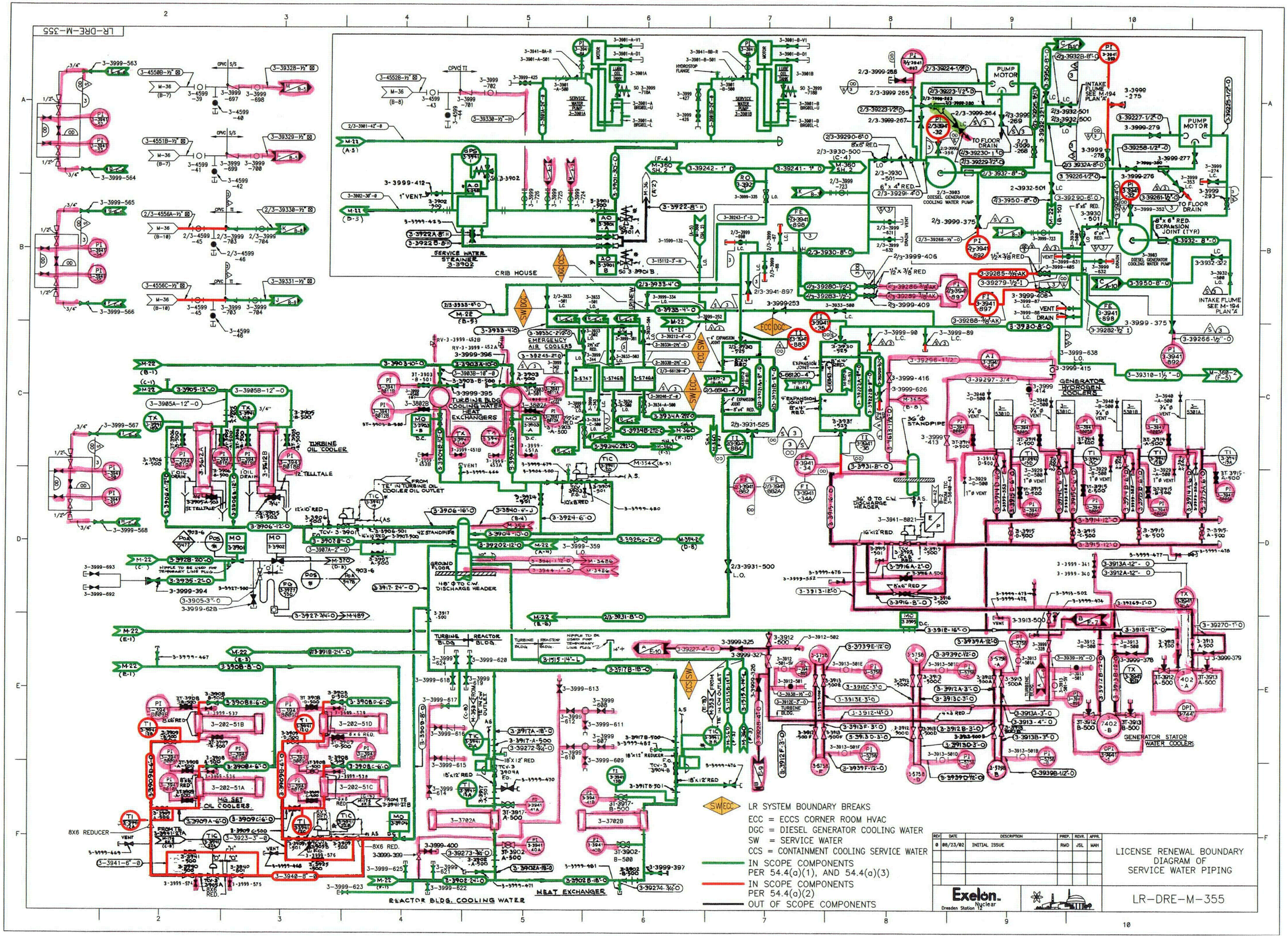
LR-DRE-M-355
CRIB HOUSE
SERVICE WATER STRAINER 3-3902
EMERGENCY AIR COOLERS
TURBINE BLDG. COOLING WATER HEAT EXCHANGERS
TURBINE OIL COOLER
PUMP MOTOR
DIESEL GENERATOR COOLING WATER PUMP
INTAKE FLUME SEE M-194 PLAN 'A'
TO FLOOR DRAIN
8"x 6" RED. EXPANSION JOINT (TYP.)
GENERATOR HYDROGEN COOLERS
36" ϕ STANDPIPE
36" ϕ TO C.W. DISCHARGE HEADER
48" ϕ TO C.W. DISCHARGE HEADER
GENERATOR STATOR WATER COOLERS
MG SET OIL COOLERS
REACTOR BLDG. COOLING WATER HEAT EXCHANGER
LR SYSTEM BOUNDARY BREAKS
ECC = ECCS CORNER ROOM HVAC
DGC = DIESEL GENERATOR COOLING WATER
SW = SERVICE WATER
CCS = CONTAINMENT COOLING SERVICE WATER
IN SCOPE COMPONENTS PER 54.4(a)(1), AND 54.4(a)(3)
IN SCOPE COMPONENTS PER 54.4(a)(2)
OUT OF SCOPE COMPONENTS
REV | DATE | DESCRIPTION | PREP. | REVR. | APPR.
0 | 08/23/02 | INITIAL ISSUE | RMD | JSL | MAH
Exelon. Dresden Station Nuclear
LICENSE RENEWAL BOUNDARY DIAGRAM OF SERVICE WATER PIPING
LR-DRE-M-355

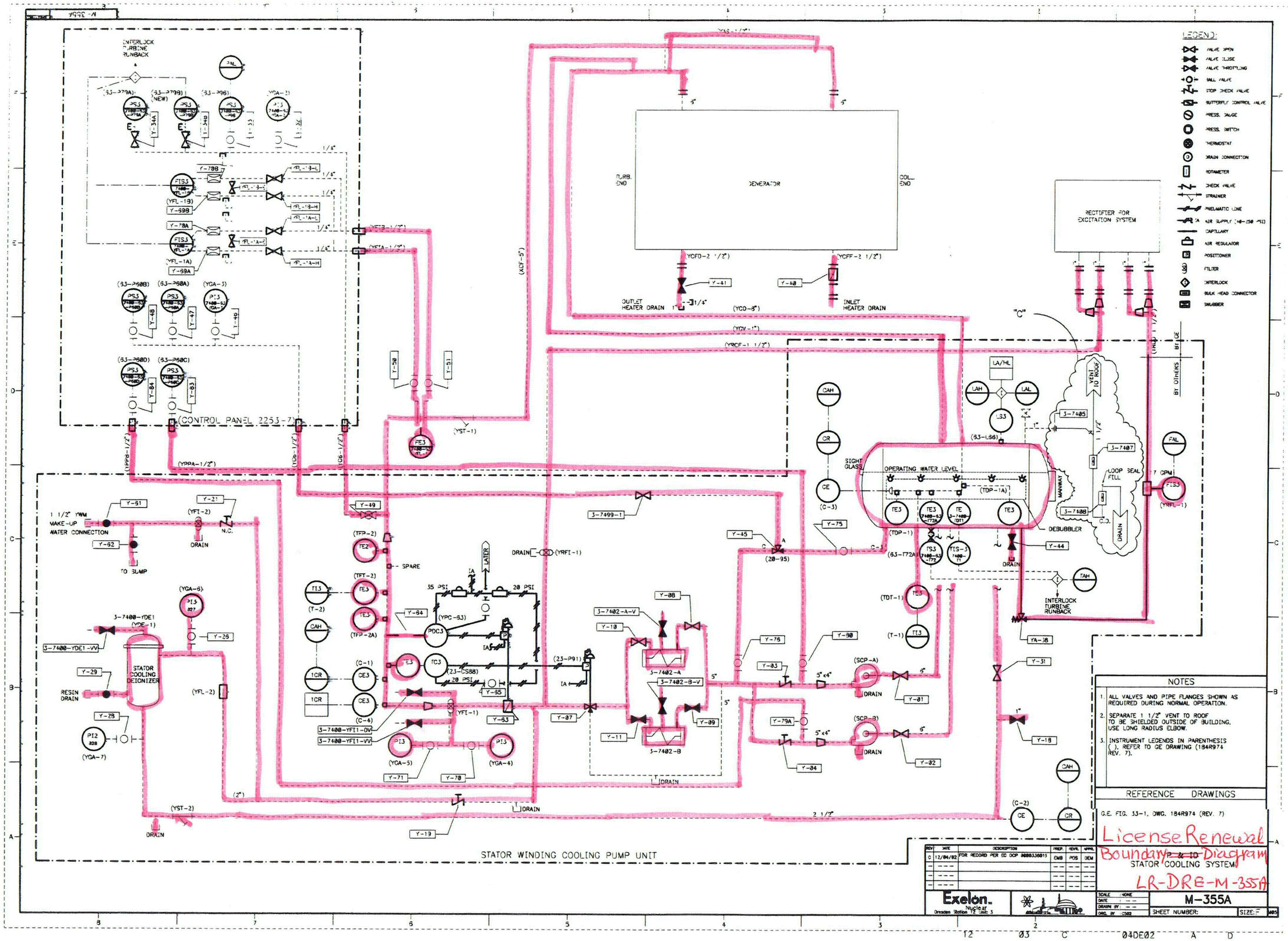

NOTES

1. ALL VALVES AND PIPE FLANGES SHOWN AS REQUIRED DURING NORMAL OPERATION.
2. SEPARATE 1 1/2" VENT TO ROOF TO BE SHIELDED OUTSIDE OF BUILDING, USE LONG RADIUS ELBOW.
3. INSTRUMENT LEGENDS IN PARENTHESIS ( ), REFER TO GE DRAWING (184R974 REV. 7).

REFERENCE DRAWINGS

G.E. FIG. 33-1, DWG. 184R974 (REV. 7)

License Renewal Boundary ~~P & ID~~ Diagram

STATOR COOLING SYSTEM

LR-DRE-M-355A

REV	DATE	DESCRIPTION	PREP.	REVR.	APPR.
C	12/04/02	FOR RECORD PER EC DCP 0000336013	EMB	POS	DEM

Exelon. Nuclear
Dresden Station 12 Unit 3

SCALE: NONE
DATE: --
DRAWN BY: --
ORG. BY: C502

M-355A

SHEET NUMBER: SIZE: F

12 03 C 04DE02 A D

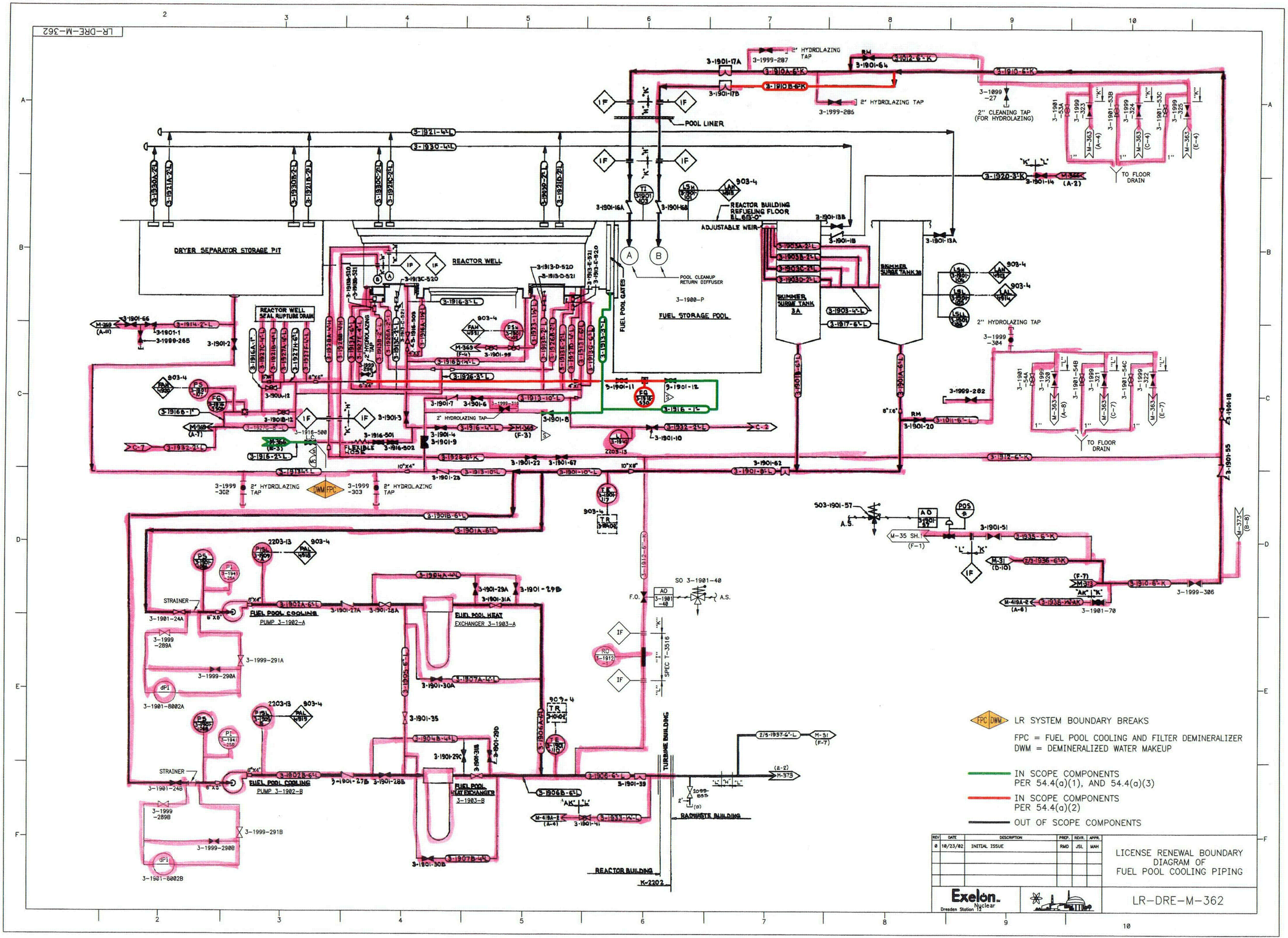
LR-DRE-M-362
DRYER SEPARATOR STORAGE PIT
REACTOR WELL
REACTOR WELL SEAL RUPTURE DRAIN
FUEL STORAGE POOL
POOL LINER
POOL CLEANUP RETURN DIFFUSER
FUEL POOL GATES
REACTOR BUILDING REFUELING FLOOR EL. 613'-0"
ADJUSTABLE WEIR
SKIMMER SURGE TANK 3A
SKIMMER SURGE TANK 3B
2" HYDROLAZING TAP
2" CLEANING TAP (FOR HYDROLAZING)
TO FLOOR DRAIN
FUEL POOL COOLING PUMP 3-1902-A
FUEL POOL COOLING PUMP 3-1902-B
FUEL POOL HEAT EXCHANGER 3-1903-A
FUEL POOL HEAT EXCHANGER 3-1903-B
STRAINER
TURBINE BUILDING
RADWASTE BUILDING
REACTOR BUILDING
LR SYSTEM BOUNDARY BREAKS
FPC = FUEL POOL COOLING AND FILTER DEMINERALIZER
DWM = DEMINERALIZED WATER MAKEUP
IN SCOPE COMPONENTS PER 54.4(a)(1), AND 54.4(a)(3)
IN SCOPE COMPONENTS PER 54.4(a)(2)
OUT OF SCOPE COMPONENTS
REV DATE DESCRIPTION PREP. REVR. APPR.
0 10/23/02 INITIAL ISSUE RMD JSL MAH
LICENSE RENEWAL BOUNDARY DIAGRAM OF FUEL POOL COOLING PIPING
Exelon Nuclear
Dresden Station 12
LR-DRE-M-362

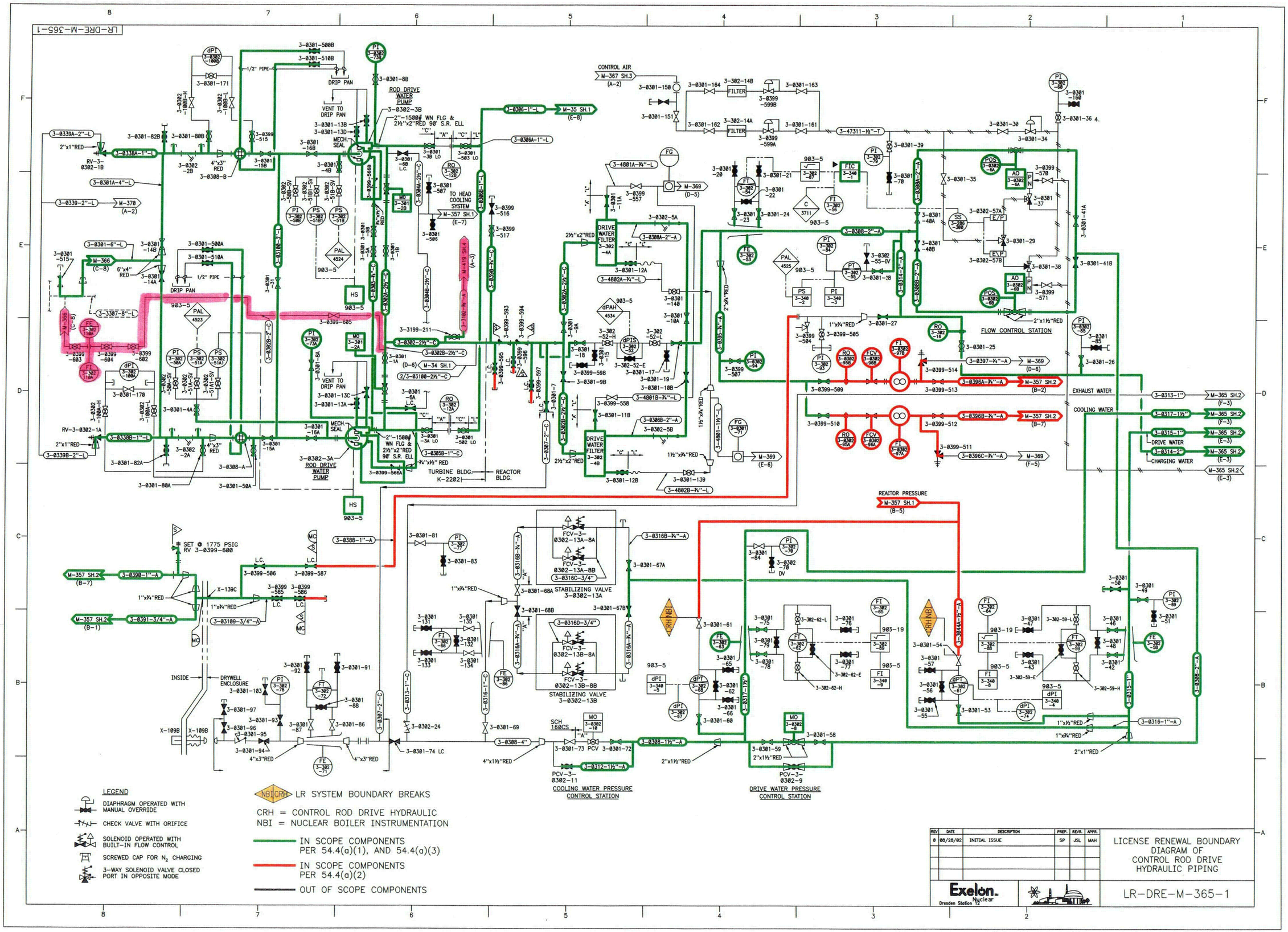
LR-DRE-M-365-1
ROD DRIVE WATER PUMP
TURBINE BLDG. K-2202
REACTOR BLDG.
CONTROL AIR
DRIVE WATER FILTER 3-302-4A
DRIVE WATER FILTER 3-302-4B
FLOW CONTROL STATION
EXHAUST WATER
COOLING WATER
DRIVE WATER
CHARGING WATER
REACTOR PRESSURE
STABILIZING VALVE 3-0302-13A
STABILIZING VALVE 3-0302-13B
COOLING WATER PRESSURE CONTROL STATION
DRIVE WATER PRESSURE CONTROL STATION
DRYWELL ENCLOSURE
INSIDE
TO HEAD COOLING SYSTEM
LEGEND
DIAPHRAGM OPERATED WITH MANUAL OVERRIDE
CHECK VALVE WITH ORIFICE
SOLENOID OPERATED WITH BUILT-IN FLOW CONTROL
SCREWED CAP FOR N2 CHARGING
3-WAY SOLENOID VALVE CLOSED PORT IN OPPOSITE MODE
NBI CRH LR SYSTEM BOUNDARY BREAKS
CRH = CONTROL ROD DRIVE HYDRAULIC
NBI = NUCLEAR BOILER INSTRUMENTATION
IN SCOPE COMPONENTS PER 54.4(a)(1), AND 54.4(a)(3)
IN SCOPE COMPONENTS PER 54.4(a)(2)
OUT OF SCOPE COMPONENTS
REV DATE DESCRIPTION PREP. REVR. APPR.
0 08/28/02 INITIAL ISSUE SP JSL MAH
Exelon. Nuclear
Dresden Station
LICENSE RENEWAL BOUNDARY DIAGRAM OF CONTROL ROD DRIVE HYDRAULIC PIPING
LR-DRE-M-365-1

LR-DRE-M-366

TBC = TURBINE BUILDING CLOSE COOLING WATER

DWM CRH — LR SYSTEM BOUNDARY BREAKS

CD = CONDENSATE AND CONDENSATE BOOSTER

CRH = CONTROL ROD DRIVE HYDRAULIC

CS = CORE SPRAY

DWM = DEMINERALIZED WATER MAKEUP

ISC = ISOLATION CONDENSER

IN SCOPE COMPONENTS PER 54.4(a)(1), AND 54.4(a)(3)

IN SCOPE COMPONENTS PER 54.4(a)(2)

OUT OF SCOPE COMPONENTS

REV	DATE	DESCRIPTION	PREP.	REVR.	APPR.
0	08/29/82	INITIAL ISSUE	RMD	JSL	MAH

LICENSE RENEWAL BOUNDARY DIAGRAM OF DIMINERALIZED WATER SYSTEM PIPING

Exelon. Nuclear — Dresden Station

LR-DRE-M-366

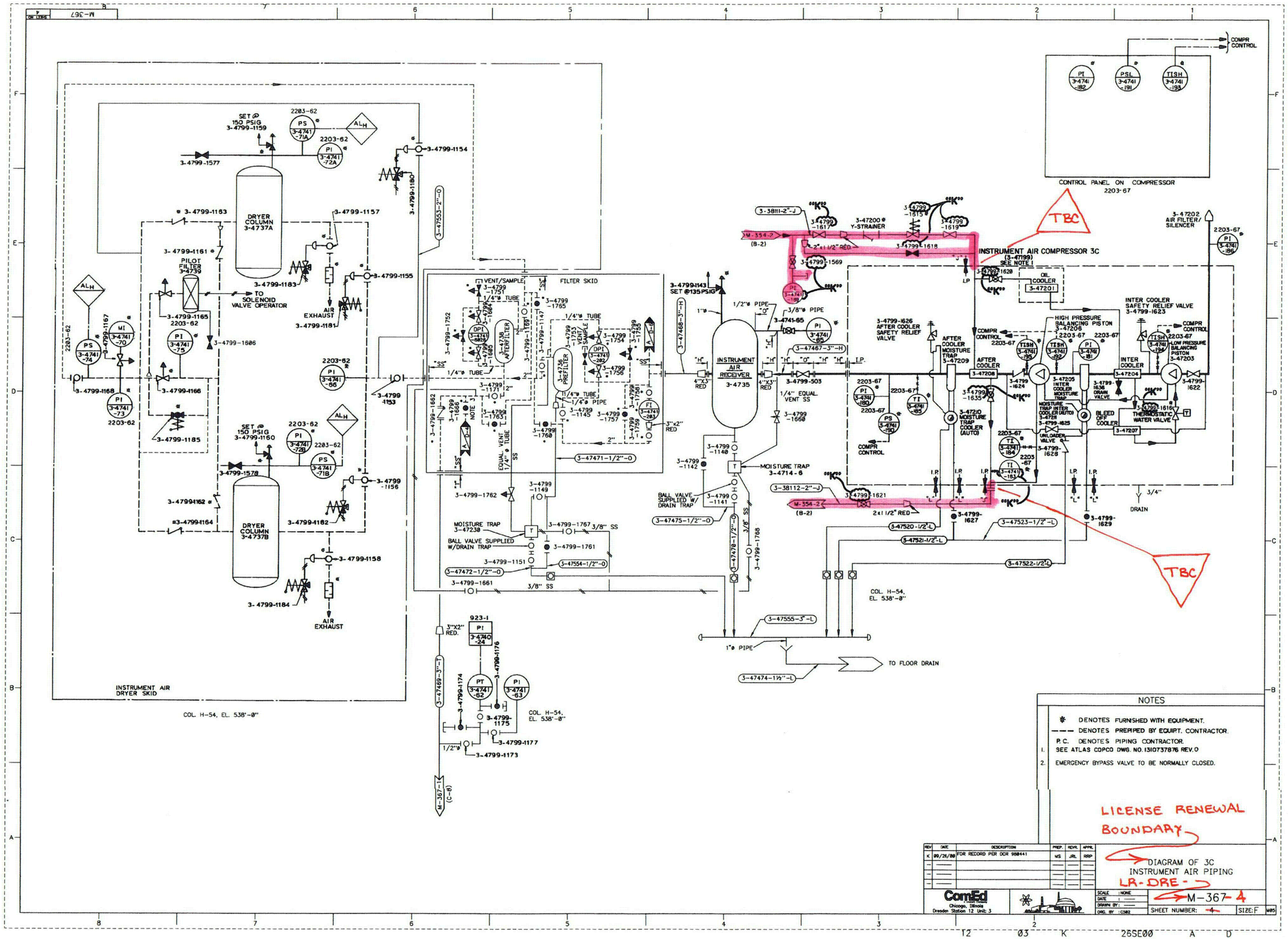

NOTES

✱ DENOTES FURNISHED WITH EQUIPMENT.
— — — DENOTES PREPIPED BY EQUIPT. CONTRACTOR.
P.C. DENOTES PIPING CONTRACTOR.
1. SEE ATLAS COPCO DWG. NO. 1310737876 REV. 0
2. EMERGENCY BYPASS VALVE TO BE NORMALLY CLOSED.

LICENSE RENEWAL BOUNDARY

REV	DATE	DESCRIPTION	PREP.	REVR.	APPR.
K	09/26/00	FOR RECORD PER DCR 980441	MS	JRL	RRP

DIAGRAM OF 3C INSTRUMENT AIR PIPING

LR-DRE-

ComEd
Chicago, Illinois
Dresden Station 12 Unit: 3

SCALE : NONE
DATE :
DRAWN BY :
ORG. BY : C502

M-367-4

SHEET NUMBER: 4 SIZE: F

12 03 K 26SE00 A D

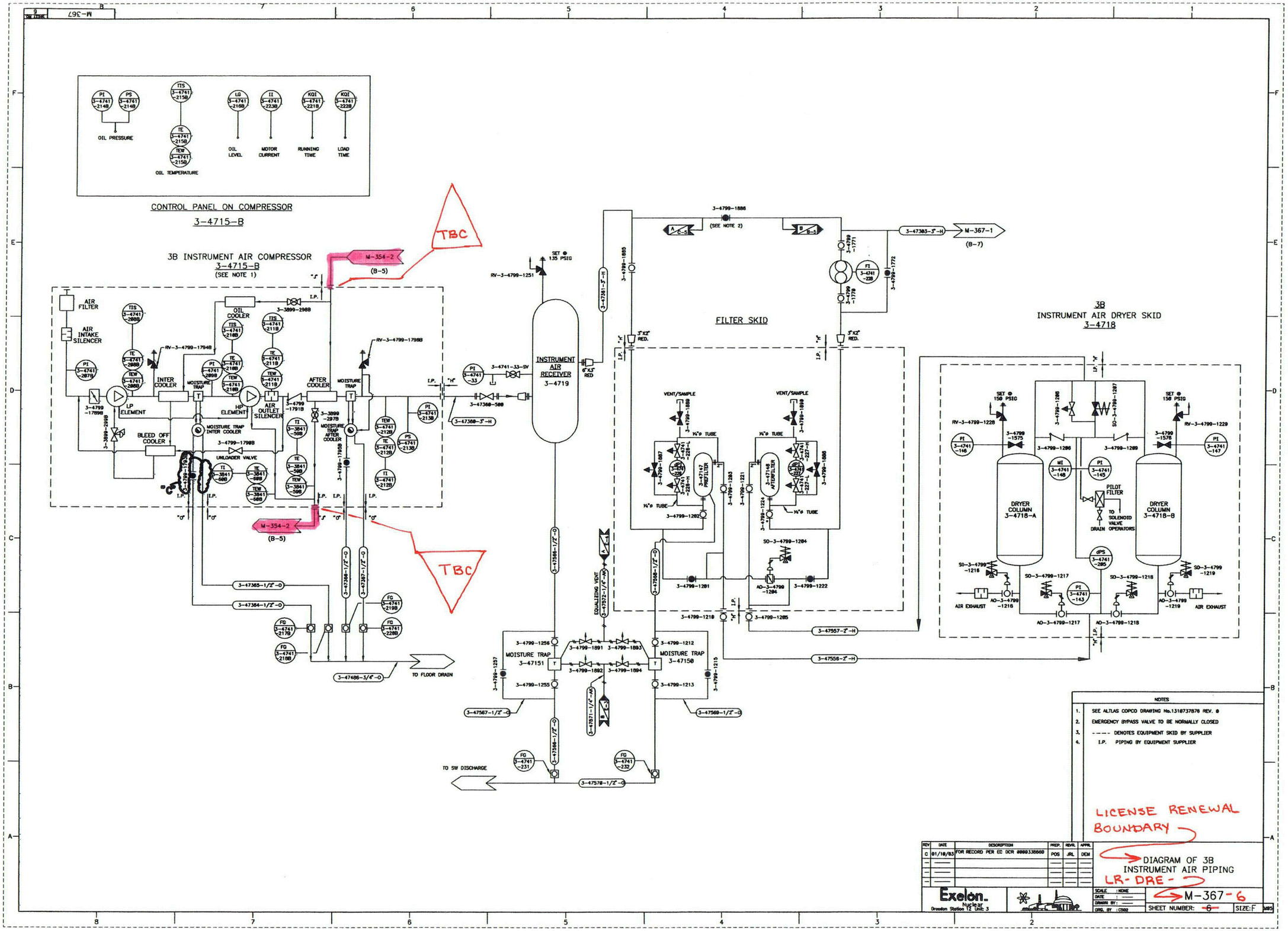
CONTROL PANEL ON COMPRESSOR
3-4715-B
OIL PRESSURE
OIL TEMPERATURE
OIL LEVEL
MOTOR CURRENT
RUNNING TIME
LOAD TIME
3B INSTRUMENT AIR COMPRESSOR
3-4715-B
(SEE NOTE 1)
TBC
M-354-2
(B-5)
AIR FILTER
AIR INTAKE SILENCER
OIL COOLER
INTER COOLER
LP ELEMENT
HP ELEMENT
AIR OUTLET SILENCER
AFTER COOLER
MOISTURE TRAP
MOISTURE TRAP INTER COOLER
MOISTURE TRAP AFTER COOLER
BLEED OFF COOLER
UNLOADER VALVE
INSTRUMENT AIR RECEIVER
3-4719
SET @ 135 PSIG
RV-3-4799-1251
FILTER SKID
VENT/SAMPLE
3-47147 PREFILTER
3-47148 AFTERFILTER
EQUALIZING VENT
MOISTURE TRAP 3-47151
MOISTURE TRAP 3-47150
TO FLOOR DRAIN
TO SW DISCHARGE
3B
INSTRUMENT AIR DRYER SKID
3-4718
SET @ 150 PSIG
DRYER COLUMN 3-4718-A
DRYER COLUMN 3-4718-B
PILOT FILTER
TO SOLENOID VALVE OPERATORS
DRAIN
AIR EXHAUST
NOTES
1. SEE ALTLAS COPCO DRAWING No.1310737878 REV. 0
2. EMERGENCY BYPASS VALVE TO BE NORMALLY CLOSED
3. ---- DENOTES EQUIPMENT SKID BY SUPPLIER
4. I.P. PIPING BY EQUIPMENT SUPPLIER
LICENSE RENEWAL BOUNDARY
REV DATE DESCRIPTION PREP. REVIL APPR.
C 01/10/03 FOR RECORD PER EC DCR 00003138660 POS JRL DEM
Exelon. Nuclear
Dresden Station 1,2 Unit 3
DIAGRAM OF 3B INSTRUMENT AIR PIPING
LR-DRE-
M-367-6
SHEET NUMBER: 6
SIZE: F