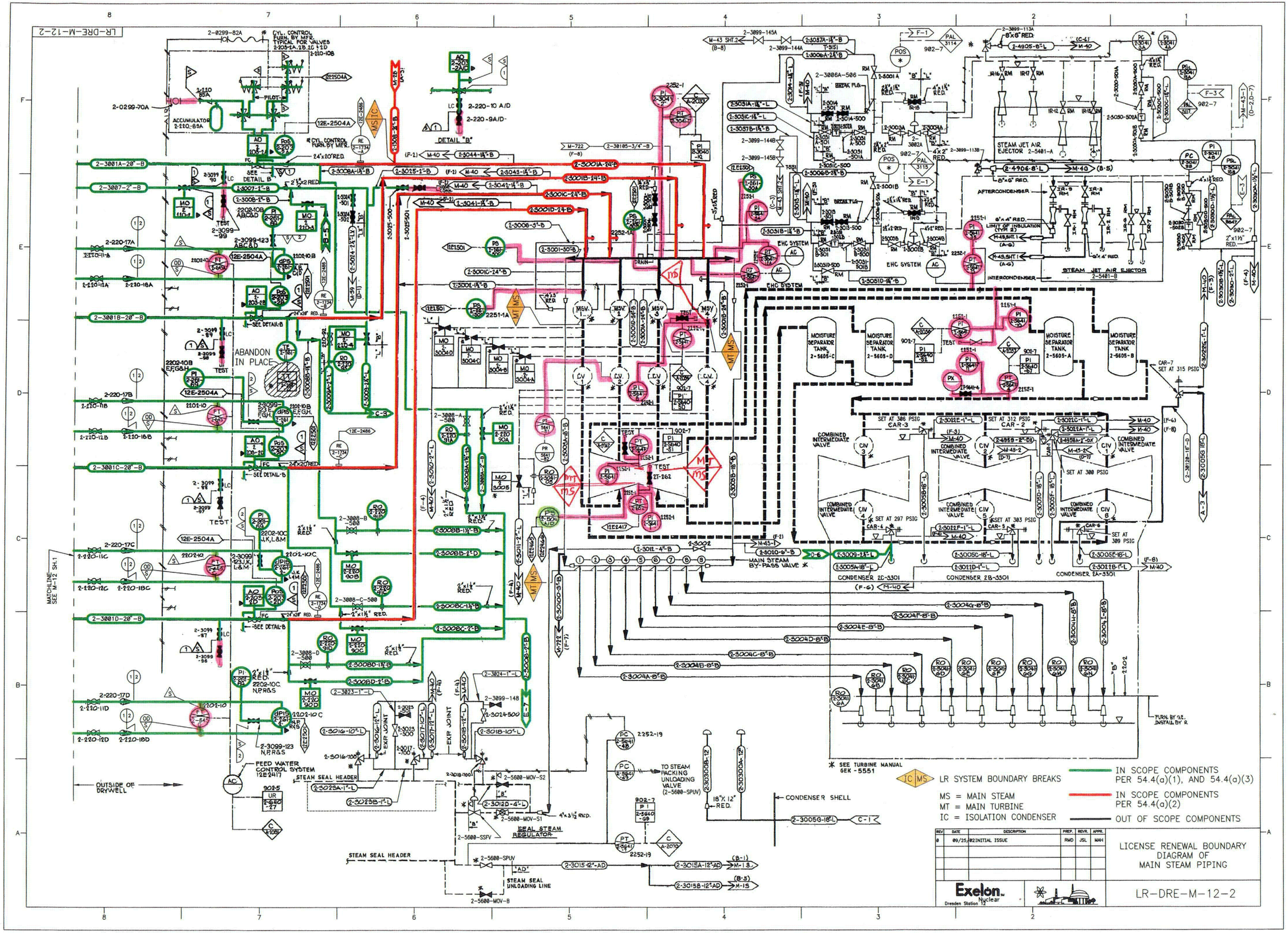
LR-DRE-M-12-2
ABANDON IN PLACE
MOISTURE SEPARATOR TANK 2-5605-C
MOISTURE SEPARATOR TANK 2-5605-D
MOISTURE SEPARATOR TANK 2-5605-A
MOISTURE SEPARATOR TANK 2-5605-B
STEAM JET AIR EJECTOR 2-5401-A
STEAM JET AIR EJECTOR 2-5401-B
COMBINED INTERMEDIATE VALVE
CONDENSER 2C-3301
CONDENSER 2B-3301
CONDENSER 2A-3301
MAIN STEAM BY-PASS VALVE
FEED WATER CONTROL SYSTEM 12E2417
STEAM SEAL HEADER
SEAL STEAM REGULATOR
STEAM SEAL UNLOADING LINE
TO STEAM PACKING UNLOADING VALVE (2-5600-SPUV)
CONDENSER SHELL
OUTSIDE OF DRYWELL
MATCHLINE SEE M-12 SH.1
* SEE TURBINE MANUAL GEK-5551
LR SYSTEM BOUNDARY BREAKS
MS = MAIN STEAM
MT = MAIN TURBINE
IC = ISOLATION CONDENSER
IN SCOPE COMPONENTS PER 54.4(a)(1), AND 54.4(a)(3)
IN SCOPE COMPONENTS PER 54.4(a)(2)
OUT OF SCOPE COMPONENTS
REV DATE DESCRIPTION PREP. REVR. APPR.
0 09/25/02 INITIAL ISSUE RMD JSL MAH
LICENSE RENEWAL BOUNDARY DIAGRAM OF MAIN STEAM PIPING
Exelon Nuclear
Dresden Station 12
LR-DRE-M-12-2

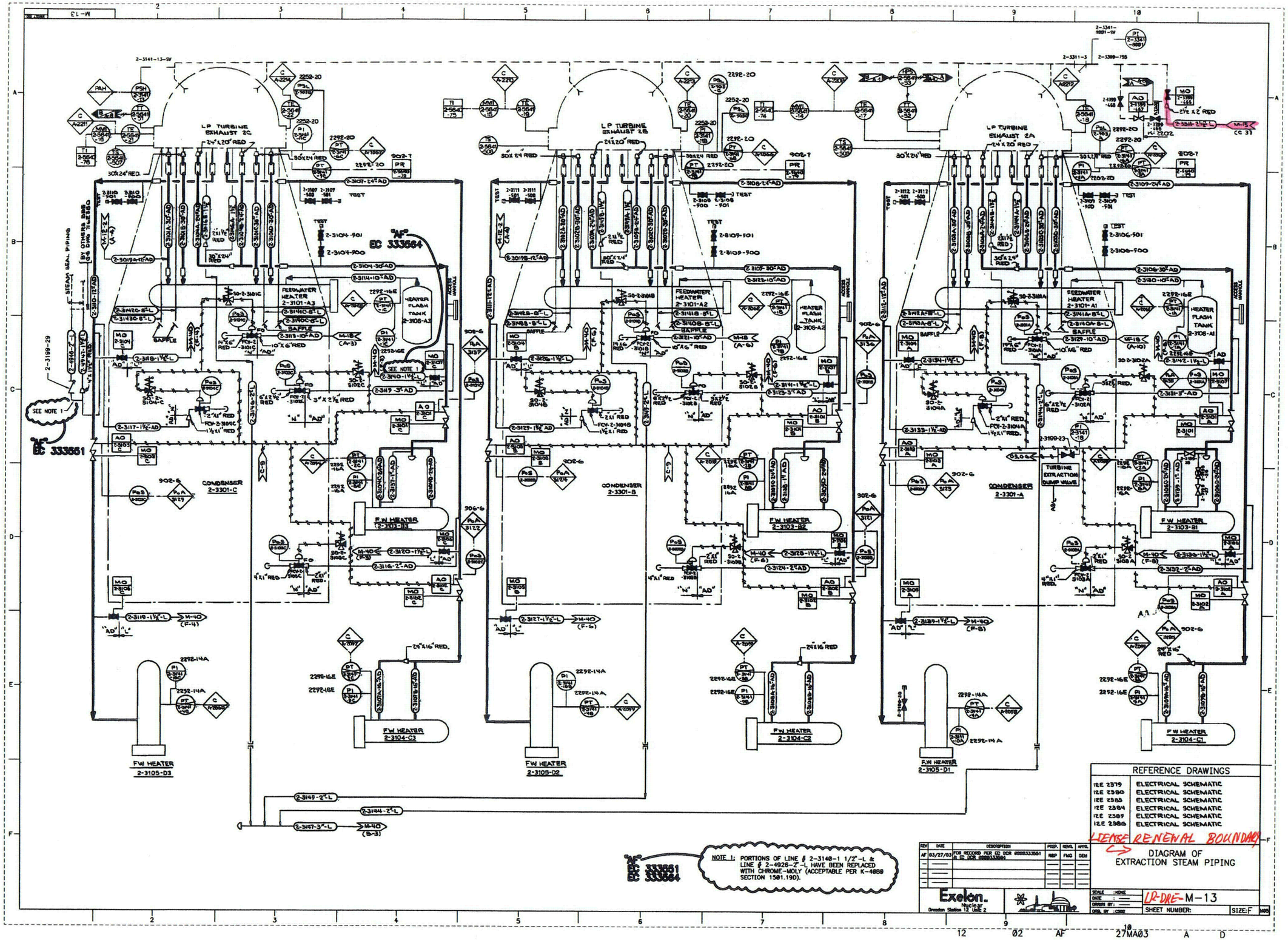

LP TURBINE EXHAUST 2C
LP TURBINE EXHAUST 2B
LP TURBINE EXHAUST 2A
FEEDWATER HEATER 2-3101-A3
FEEDWATER HEATER 2-3101-A2
FEEDWATER HEATER 2-3101-A1
HEATER FLASH TANK 2-3108-A3
HEATER FLASH TANK 2-3108-A2
HEATER FLASH TANK 2-3108-A1
CONDENSER 2-3301-C
CONDENSER 2-3301-B
CONDENSER 2-3301-A
TURBINE EXTRACTION DUMP VALVE
F.W. HEATER 2-3103-B3
F.W. HEATER 2-3103-B2
F.W. HEATER 2-3103-B1
F.W. HEATER 2-3104-C3
F.W. HEATER 2-3104-C2
F.W. HEATER 2-3104-C1
F.W. HEATER 2-3105-D3
F.W. HEATER 2-3105-D2
F.W. HEATER 2-3105-D1
STEAM SEAL PIPING
BY OTHERS SEE DWG 716E380
"AF" EC 333564
"AF" EC 333551
SEE NOTE 1
NOTE 1: PORTIONS OF LINE # 2-3140-1 1/2"-L & LINE # 2-4926-2"-L HAVE BEEN REPLACED WITH CHROME-MOLY (ACCEPTABLE PER K-4080 SECTION 1501.19D).
REFERENCE DRAWINGS
12E 2379 ELECTRICAL SCHEMATIC
12E 2380 ELECTRICAL SCHEMATIC
12E 2383 ELECTRICAL SCHEMATIC
12E 2384 ELECTRICAL SCHEMATIC
12E 2389 ELECTRICAL SCHEMATIC
12E 2386 ELECTRICAL SCHEMATIC
LICENSE RENEWAL BOUNDARY
DIAGRAM OF EXTRACTION STEAM PIPING
Exelon. Nuclear
Dresden Station 12 Unit 2
LR-DRE-M-13
SHEET NUMBER:
SIZE:F

LR-DRE-M-14

FW HEATER 2-3105-03

FW HEATER 2-3105-02

FW HEATER 2-3105-01

REACTOR

DRYWELL

TURBINE BLDG.

REACTOR BLDG.

REACTOR FEED PUMP 2-3201A

REACTOR FEED PUMP 2-3201B

REACTOR FEED PUMP 2-3201C

REACTOR FEED FLUSHING TO CONDENSER

RECIRC. TO CONDENSER

REACTOR FEED SYSTEM

GE ZIP SYSTEM

FW REGULATING STATION

DETAIL "A"
SOLENOID VALVE DIAGRAM

LR SYSTEM BOUNDARY BREAKS
ZI = ZINC INJECTION
FW = FEEDWATER
RWC = REACTOR WATER CLEANUP
PC = CONTAINMENT ISOLATION COMPONENTS AND PRIMARY CONTAINMENT PIPING
RV = REACTOR VESSEL

IN SCOPE COMPONENTS PER 54.4(a)(1), AND 54.4(a)(3)

IN SCOPE COMPONENTS PER 54.4(a)(2)

OUT OF SCOPE COMPONENTS

REV	DATE	DESCRIPTION	PREP.	REVR.	APPR.
0	09/25/82	INITIAL ISSUE	RMD	JSL	MAH

Exelon. Nuclear
Dresden Station

LICENSE RENEWAL BOUNDARY DIAGRAM OF REACTOR FEED PIPING

LR-DRE-M-14

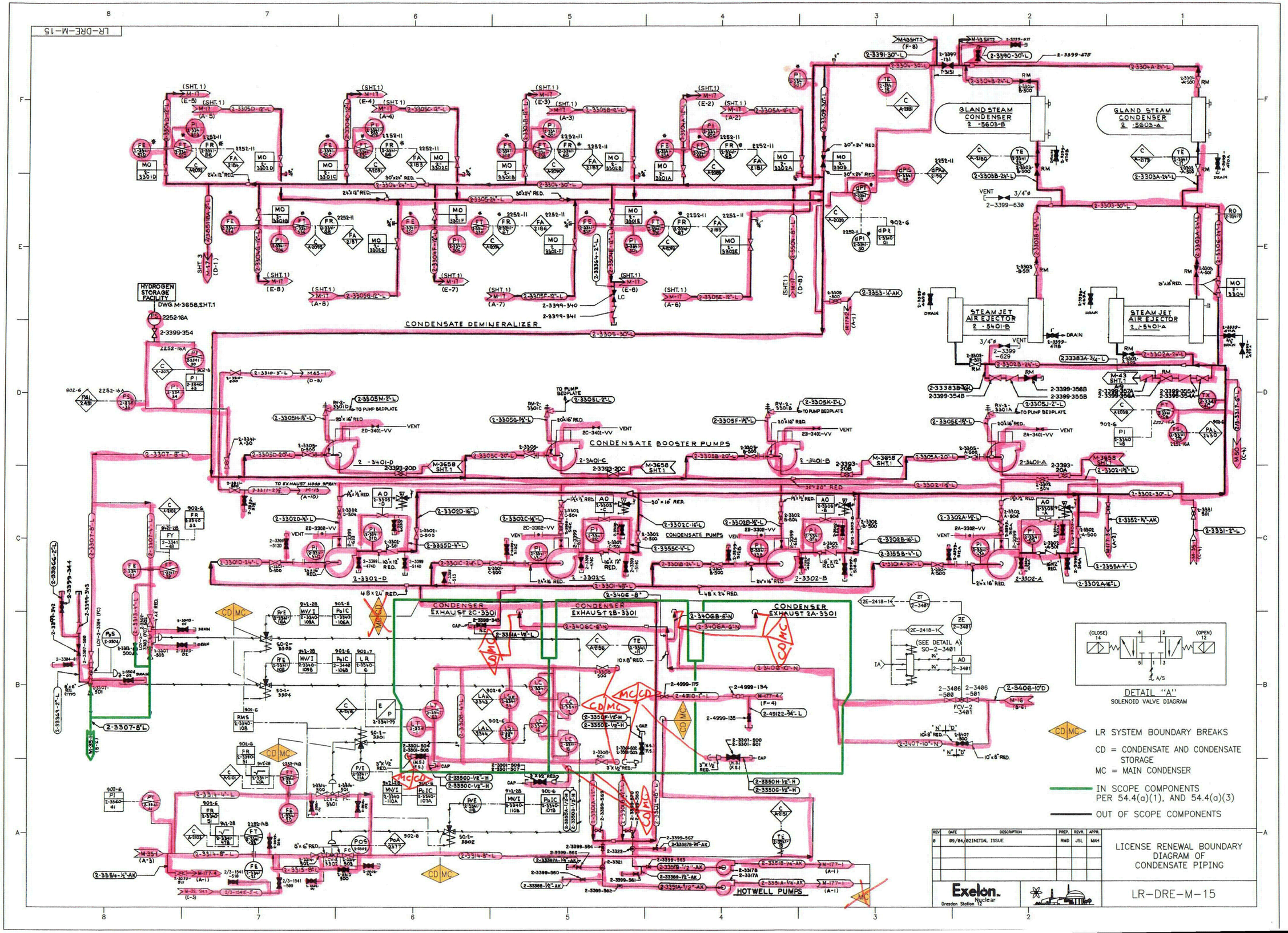
LR-DRE-M-15
CONDENSATE DEMINERALIZER
CONDENSATE BOOSTER PUMPS
CONDENSATE PUMPS
HYDROGEN STORAGE FACILITY
DWG. M-3658, SHT.1
GLAND STEAM CONDENSER 2-5603-B
GLAND STEAM CONDENSER 2-5603-A
STEAM JET AIR EJECTOR 2-5401-B
STEAM JET AIR EJECTOR 2-5401-A
CONDENSER EXHAUST 2C-3301
CONDENSER EXHAUST 2B-3301
CONDENSER EXHAUST 2A-3301
HOTWELL PUMPS
DETAIL "A"
SOLENOID VALVE DIAGRAM
LR SYSTEM BOUNDARY BREAKS
CD = CONDENSATE AND CONDENSATE STORAGE
MC = MAIN CONDENSER
IN SCOPE COMPONENTS PER 54.4(a)(1), AND 54.4(a)(3)
OUT OF SCOPE COMPONENTS
REV DATE DESCRIPTION PREP. REVR. APPR.
0 09/04/02 INITIAL ISSUE RMD JSL MAH
LICENSE RENEWAL BOUNDARY DIAGRAM OF CONDENSATE PIPING
Exelon Nuclear
Dresden Station 12
LR-DRE-M-15

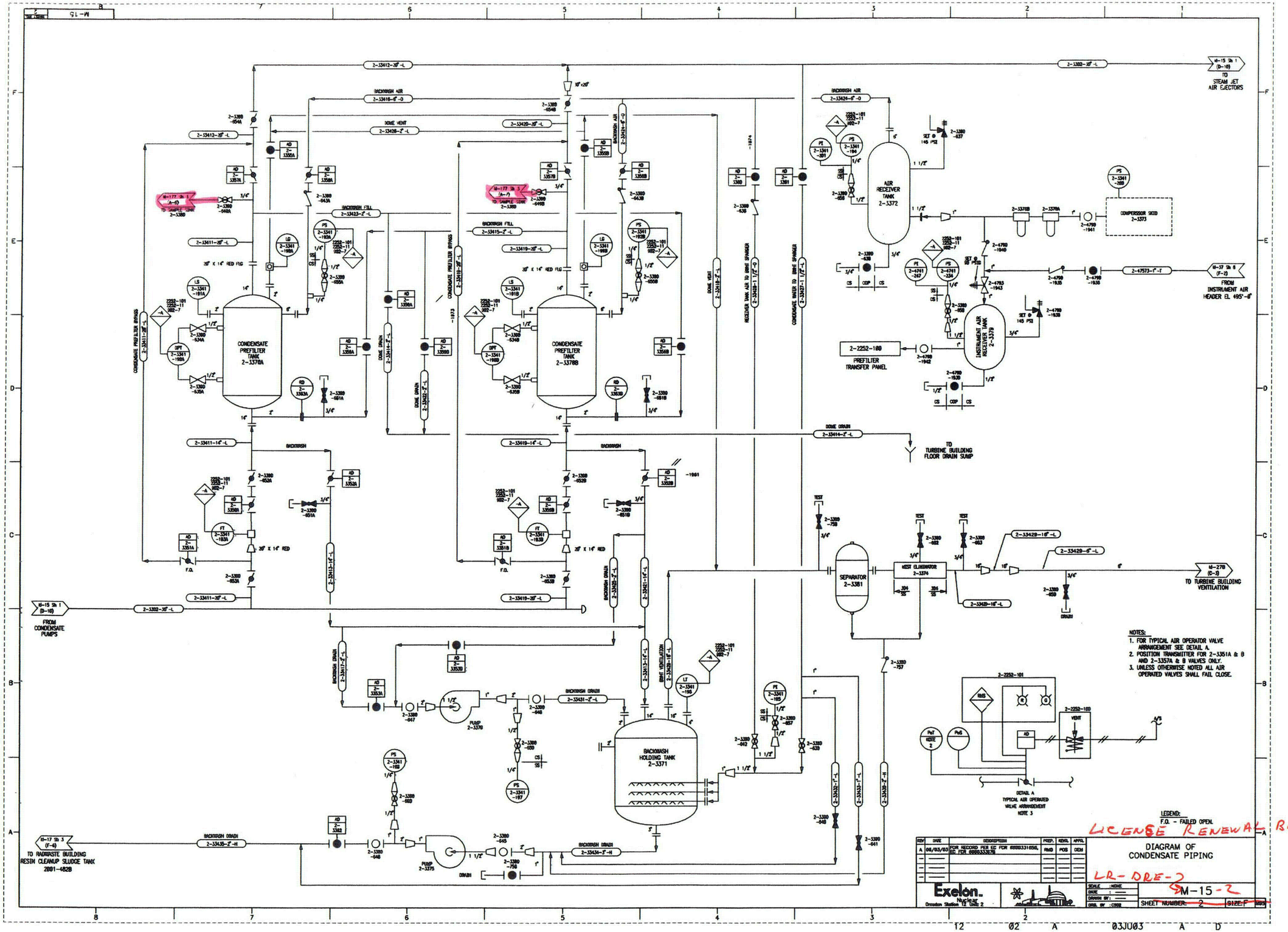

NOTES:
1. FOR TYPICAL AIR OPERATOR VALVE ARRANGEMENT SEE DETAIL A.
2. POSITION TRANSMITTER FOR 2-3351A & B AND 2-3357A & B VALVES ONLY.
3. UNLESS OTHERWISE NOTED ALL AIR OPERATED VALVES SHALL FAIL CLOSE.

LEGEND:
F.O. - FAILED OPEN.

LICENSE RENEWAL BOUNDARY

REV	DATE	DESCRIPTION	PREP.	REVR.	APPR.
A	06/03/03	FOR RECORD PER EC FOR 0000331050, EC FOR 0000333078	RMD	POS	DEM

DIAGRAM OF CONDENSATE PIPING

LR-DRE-2

Exelon. Nuclear
Dresden Station 12 Unit 2

SCALE: NONE
DATE:
DRAWN BY:
DRG. BY: CSSR

M-15-2

SHEET NUMBER: 2 SIZE: F

12 02 A 03JU03 A D

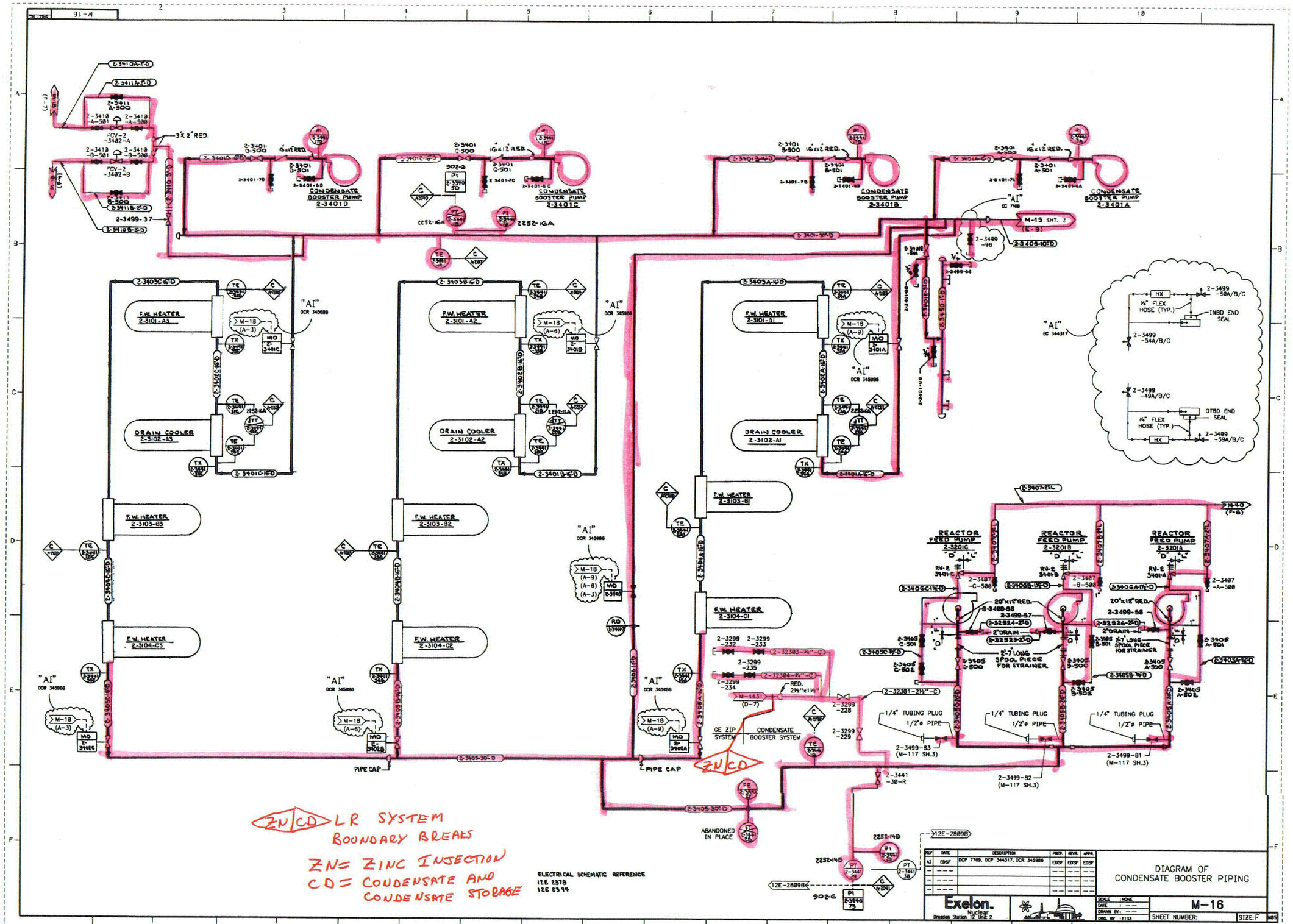
CONDENSATE BOOSTER PUMP 2-3401D
CONDENSATE BOOSTER PUMP 2-3401C
CONDENSATE BOOSTER PUMP 2-3401B
CONDENSATE BOOSTER PUMP 2-3401A
F.W. HEATER 2-3101-A3
F.W. HEATER 2-3101-A2
F.W. HEATER 2-3101-A1
DRAIN COOLER 2-3102-A3
DRAIN COOLER 2-3102-A2
DRAIN COOLER 2-3102-A1
F.W. HEATER 2-3103-B3
F.W. HEATER 2-3103-B2
F.W. HEATER 2-3103-B1
F.W. HEATER 2-3104-C3
F.W. HEATER 2-3104-C2
F.W. HEATER 2-3104-C1
REACTOR FEED PUMP 2-3201C
REACTOR FEED PUMP 2-3201B
REACTOR FEED PUMP 2-3201A
GE ZIP SYSTEM
CONDENSATE BOOSTER SYSTEM
ZN/CD
PIPE CAP
ABANDONED IN PLACE
INBD END SEAL
OTBD END SEAL
1/4" TUBING PLUG
1/2"ø PIPE
2-7' LONG SPOOL PIECE FOR STRAINER
ZN/CD LR SYSTEM BOUNDARY BREAKS
ZN= ZINC INJECTION
CD= CONDENSATE AND CONDENSATE STORAGE
ELECTRICAL SCHEMATIC REFERENCE
12E 2378
12E 2379
DIAGRAM OF CONDENSATE BOOSTER PIPING
Exelon. Nuclear
Dresden Station 12 Unit 2
M-16
SHEET NUMBER:
SIZE: F

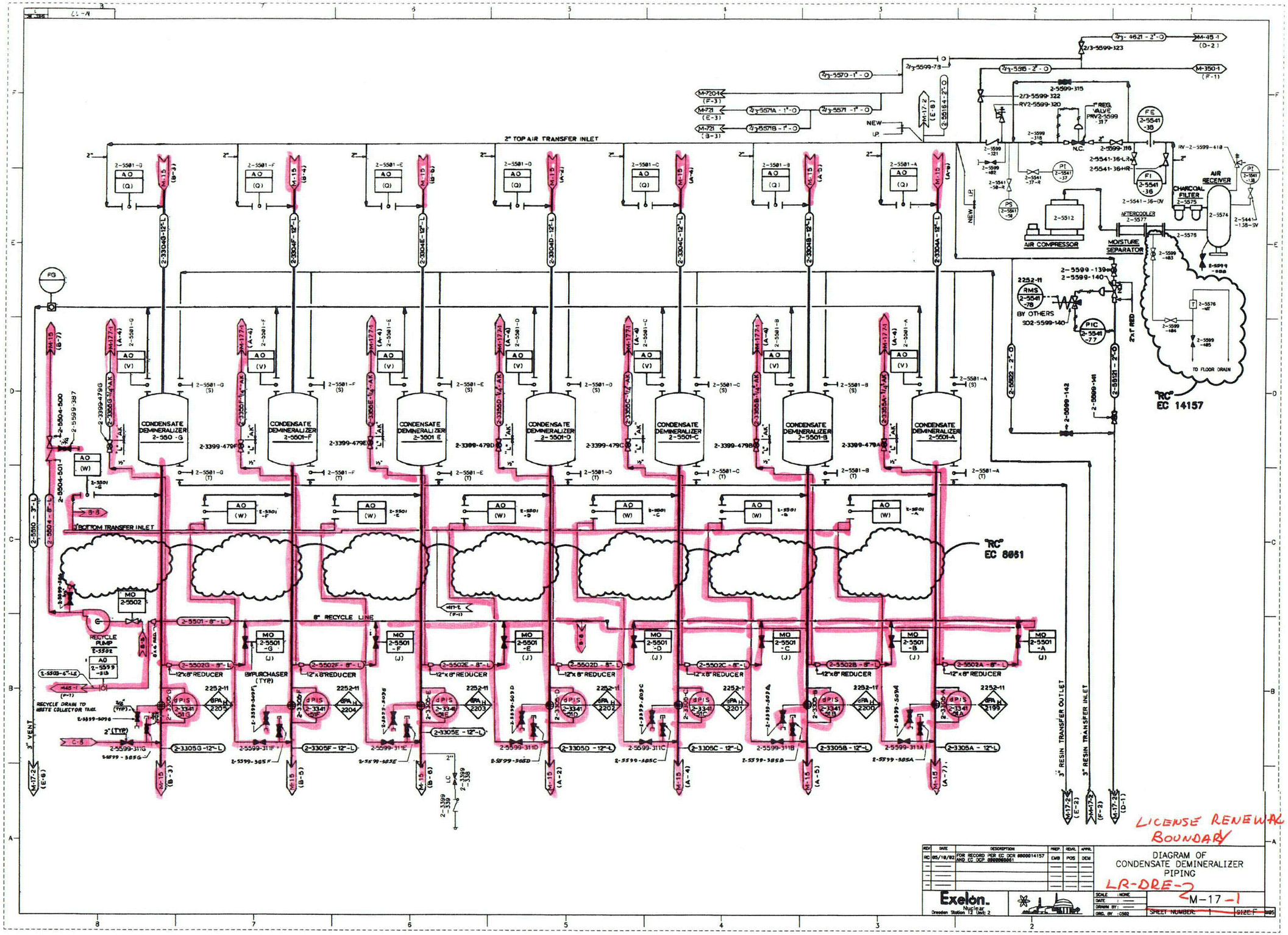
2" TOP AIR TRANSFER INLET
3" BOTTOM TRANSFER INLET
8" RECYCLE LINE
CONDENSATE DEMINERALIZER 2-550 -G
CONDENSATE DEMINERALIZER 2-5501-F
CONDENSATE DEMINERALIZER 2-5501 E
CONDENSATE DEMINERALIZER 2-5501-D
CONDENSATE DEMINERALIZER 2-5501-C
CONDENSATE DEMINERALIZER 2-5501-B
CONDENSATE DEMINERALIZER 2-5501-A
AIR COMPRESSOR
MOISTURE SEPARATOR
AIR RECEIVER
CHARCOAL FILTER
AFTERCOOLER
RECYCLE PUMP
12"x8" REDUCER
3" RESIN TRANSFER OUTLET
3" RESIN TRANSFER INLET
3" VENT
TO FLOOR DRAIN
"RC" EC 14157
"RC" EC 8861
LICENSE RENEWAL BOUNDARY
LR-DRE-2
DIAGRAM OF CONDENSATE DEMINERALIZER PIPING
M-17-1
Exelon. Nuclear
Dresden Station 12 Unit 2

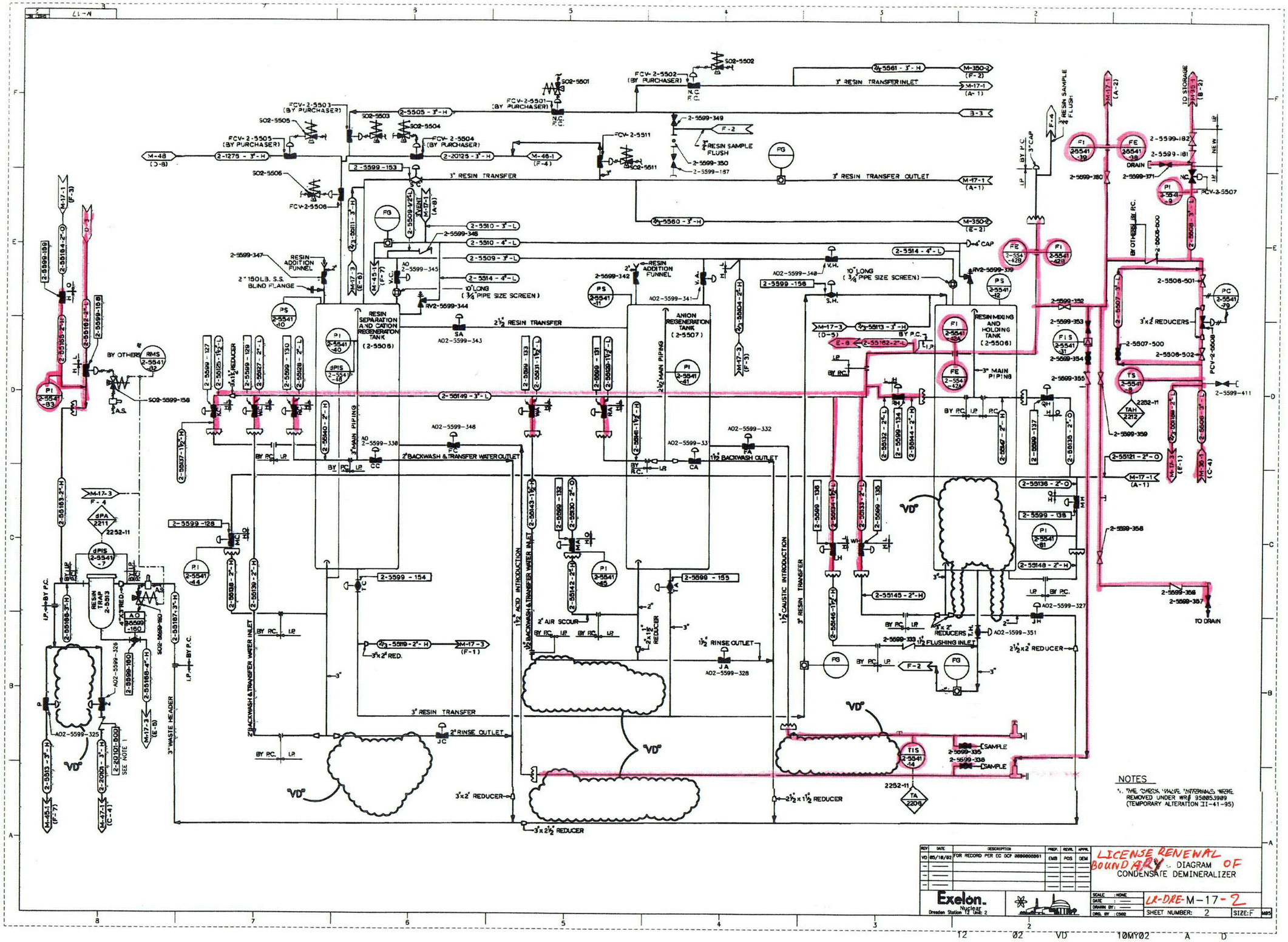

NOTES

1. THE CHECK VALVE INTERNALS WERE REMOVED UNDER WR# 950053909 (TEMPORARY ALTERATION II-41-95)

REV	DATE	DESCRIPTION	PREP.	REVR.	APPR.
VD	05/18/02	FOR RECORD PER EC OCP 0000000561	EMB	POS	DEM

LICENSE RENEWAL BOUNDARY DIAGRAM OF CONDENSATE DEMINERALIZER

Exelon. Nuclear
Dresden Station 12 Unit 2

SCALE : NONE
DATE :
DRAWN BY :
ORG. BY : C502

LR-DRE-M-17-2

SHEET NUMBER: 2 SIZE: F

12 02 VD 10MY02 A D

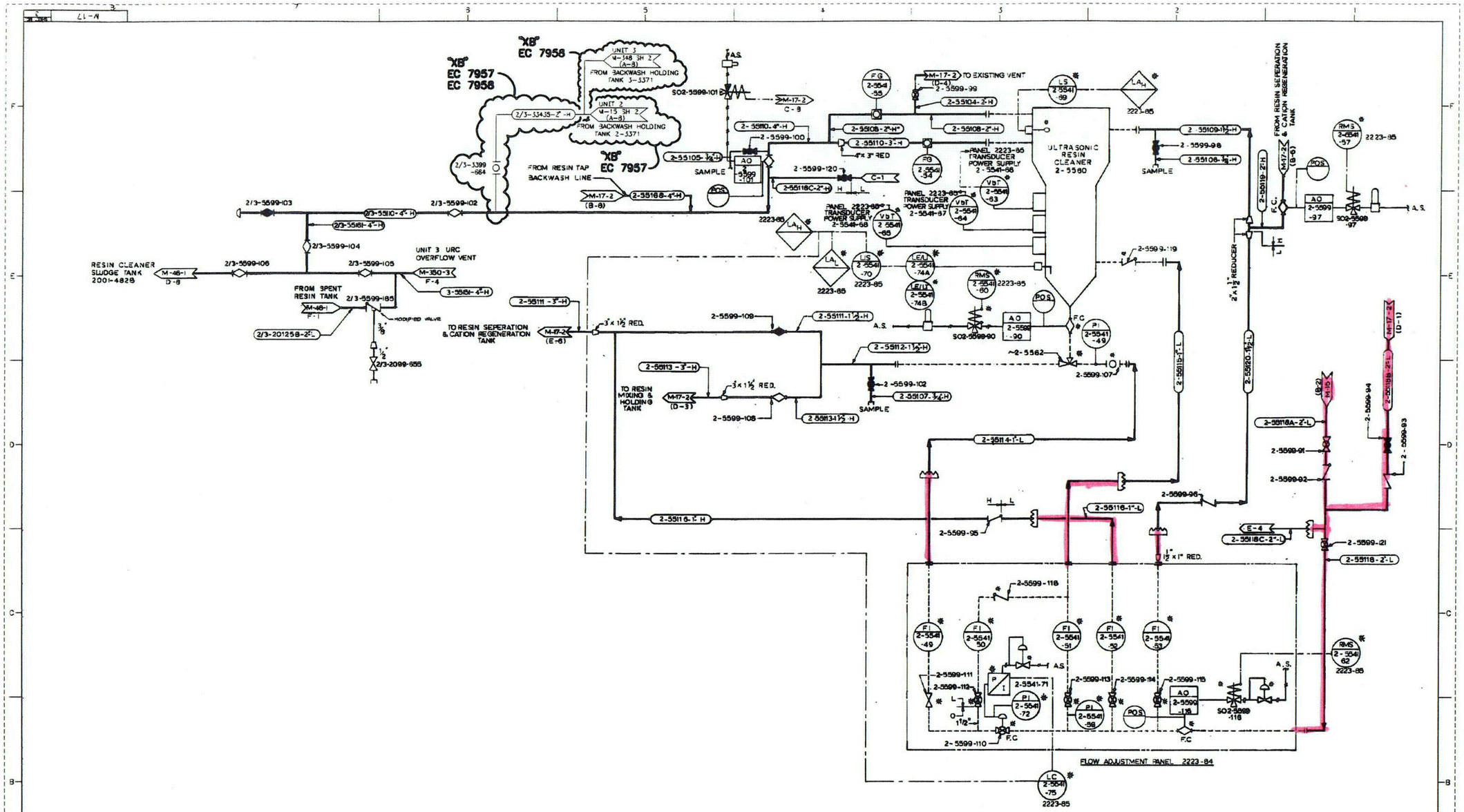

REV	DATE	DESCRIPTION	PREP.	REVR.	APPR.
XB	02/07/03	FOR RECORD PER EC DCP 000007957, EC FOR 000031195B, AND EC DCP 000007958.	MP	POS	DEM

LICENSE RENEWAL BOUNDARY OF DIAGRAM

DIAGRAM
CONDENSATE DEMINERALIZER

Exelon. Nuclear
Dresden Station 1/2 Unit 2/3

SCALE : NONE
DATE :
DRAWN BY :
ORG. BY : CS02

LR-DRF M-17-3

SHEET NUMBER: 3 SIZE: F

"XB" 12 32 XB 07FE03 A D

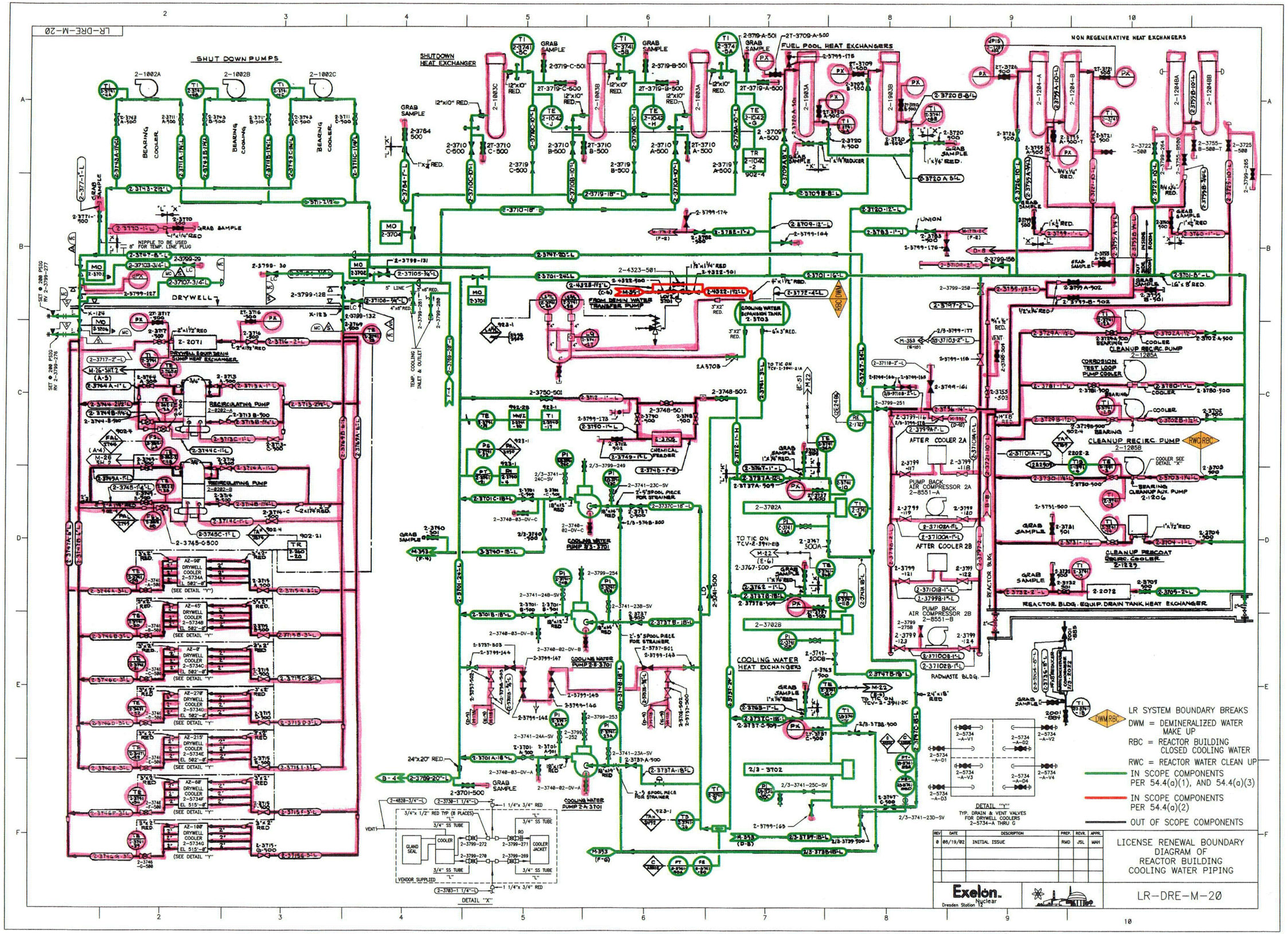
LR-DRE-M-20
SHUT DOWN PUMPS
SHUTDOWN HEAT EXCHANGER
FUEL POOL HEAT EXCHANGERS
NON REGENERATIVE HEAT EXCHANGERS
DRYWELL
DRYWELL EQUIPMENT SUMP HEAT EXCHANGER
RECIRCULATING PUMP
COOLING WATER PUMP 2A-3701
COOLING WATER PUMP 2B-3701
COOLING WATER EXPANSION TANK 2-3703
COOLING WATER HEAT EXCHANGERS
AFTER COOLER 2A
AFTER COOLER 2B
PUMP BACK AIR COMPRESSOR 2A 2-8551-A
PUMP BACK AIR COMPRESSOR 2B 2-8551-B
CLEANUP RECIRC. PUMP 2-1205A
CLEANUP RECIRC. PUMP 2-1205B
CLEANUP AUX. PUMP 2-1206
CLEANUP RECOAT RECIRC. COOLER 2-1229
REACTOR BLDG. EQUIP. DRAIN TANK HEAT EXCHANGER
RADWASTE BLDG.
REACTOR BLDG.
DETAIL "X"
DETAIL "Y"
TYP. DRAIN & VENT VALVES FOR DRYWELL COOLERS 2-5734-A THRU G
LR SYSTEM BOUNDARY BREAKS
DWM = DEMINERALIZED WATER MAKE UP
RBC = REACTOR BUILDING CLOSED COOLING WATER
RWC = REACTOR WATER CLEAN UP
IN SCOPE COMPONENTS PER 54.4(a)(1), AND 54.4(a)(3)
IN SCOPE COMPONENTS PER 54.4(a)(2)
OUT OF SCOPE COMPONENTS
REV | DATE | DESCRIPTION | PREP. | REVR. | APPR.
0 | 06/19/02 | INITIAL ISSUE | RMD | JSL | MAH
Exelon. Dresden Station Nuclear
LICENSE RENEWAL BOUNDARY DIAGRAM OF REACTOR BUILDING COOLING WATER PIPING
LR-DRE-M-20

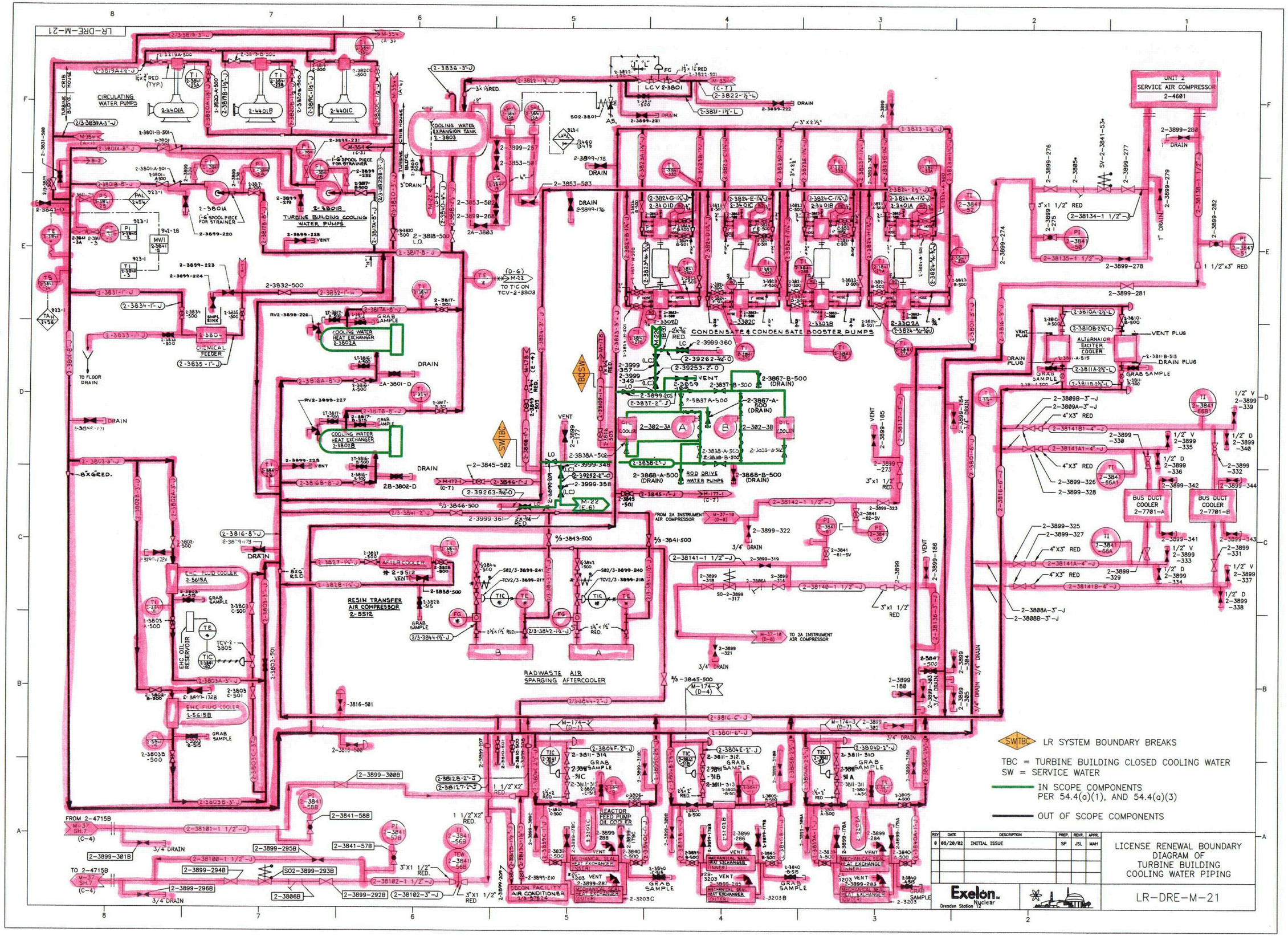
LR-DRE-M-21
CIRCULATING WATER PUMPS
TURBINE BUILDING COOLING WATER PUMPS
COOLING WATER EXPANSION TANK 2-3803
CONDENSATE & CONDENSATE BOOSTER PUMPS
UNIT 2 SERVICE AIR COMPRESSOR 2-4601
ALTERNATOR EXCITER COOLER
COOLING WATER HEAT EXCHANGER 2-3802A
COOLING WATER HEAT EXCHANGER 2-3802B
CHEMICAL FEEDER
ROD DRIVE WATER PUMPS
RESIN TRANSFER AIR COMPRESSOR 2-5512
RADWASTE AIR SPARGING AFTERCOOLER
BUS DUCT COOLER 2-7701-A
BUS DUCT COOLER 2-7701-B
EHC FLUID COOLER 2-5615A
EHC FLUID COOLER 2-5615B
EHC OIL RESERVOIR
REACTOR FEED PUMP OIL COOLER
DECON FACILITY AIR CONDITIONER
LR SYSTEM BOUNDARY BREAKS
TBC = TURBINE BUILDING CLOSED COOLING WATER
SW = SERVICE WATER
IN SCOPE COMPONENTS PER 54.4(a)(1), AND 54.4(a)(3)
OUT OF SCOPE COMPONENTS
REV DATE DESCRIPTION PREP. REVR. APPR.
0 08/20/02 INITIAL ISSUE SP JSL MAH
LICENSE RENEWAL BOUNDARY DIAGRAM OF TURBINE BUILDING COOLING WATER PIPING
Exelon Nuclear
Dresden Station 12
LR-DRE-M-21

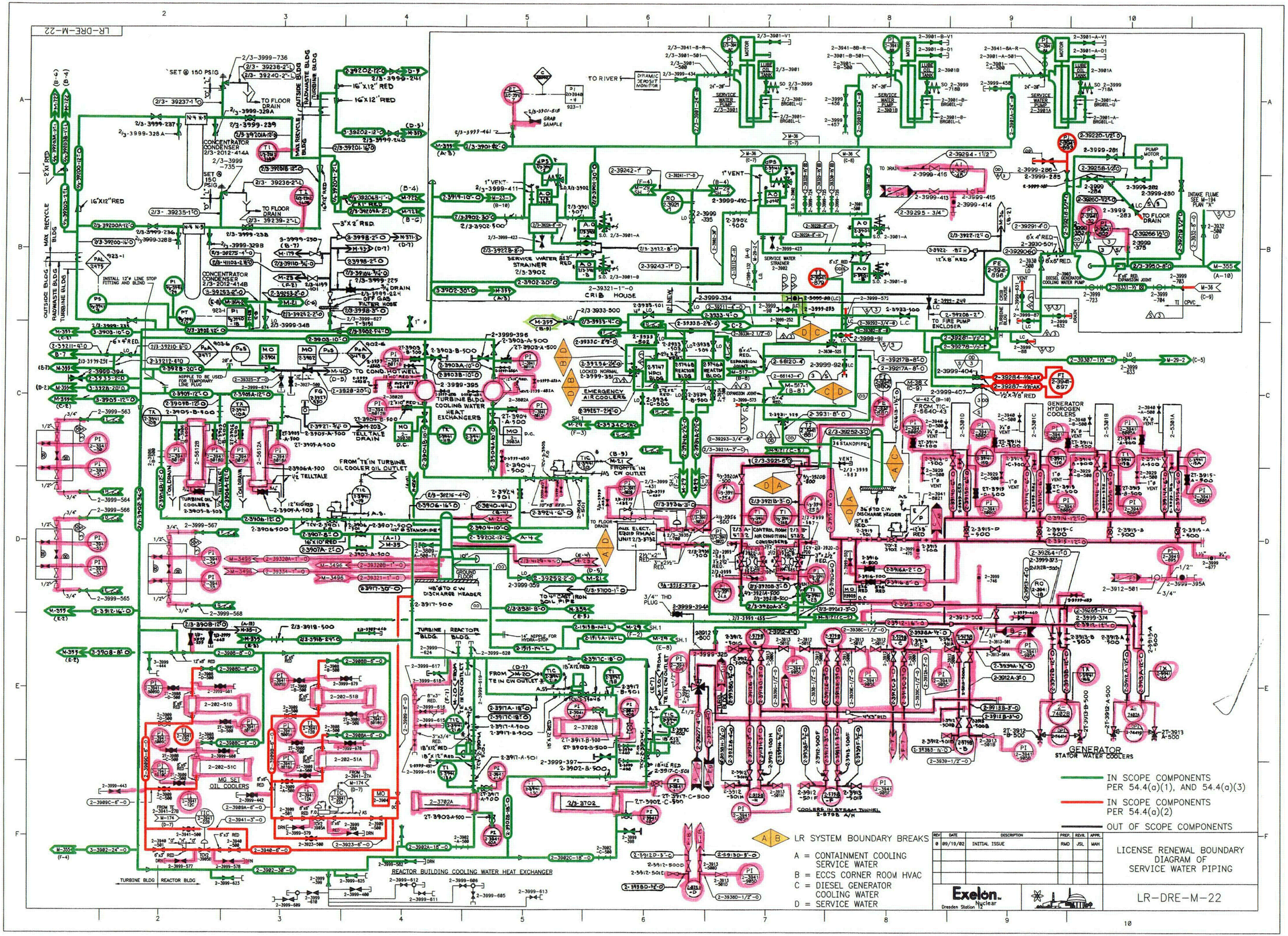
LR-DRE-M-22
IN SCOPE COMPONENTS PER 54.4(a)(1), AND 54.4(a)(3)
IN SCOPE COMPONENTS PER 54.4(a)(2)
OUT OF SCOPE COMPONENTS
LR SYSTEM BOUNDARY BREAKS
A = CONTAINMENT COOLING SERVICE WATER
B = ECCS CORNER ROOM HVAC
C = DIESEL GENERATOR COOLING WATER
D = SERVICE WATER
REV DATE DESCRIPTION PREP. REVR. APPR.
0 09/19/02 INITIAL ISSUE RMD JSL MAH
LICENSE RENEWAL BOUNDARY DIAGRAM OF SERVICE WATER PIPING
Exelon Nuclear
Dresden Station 12
LR-DRE-M-22

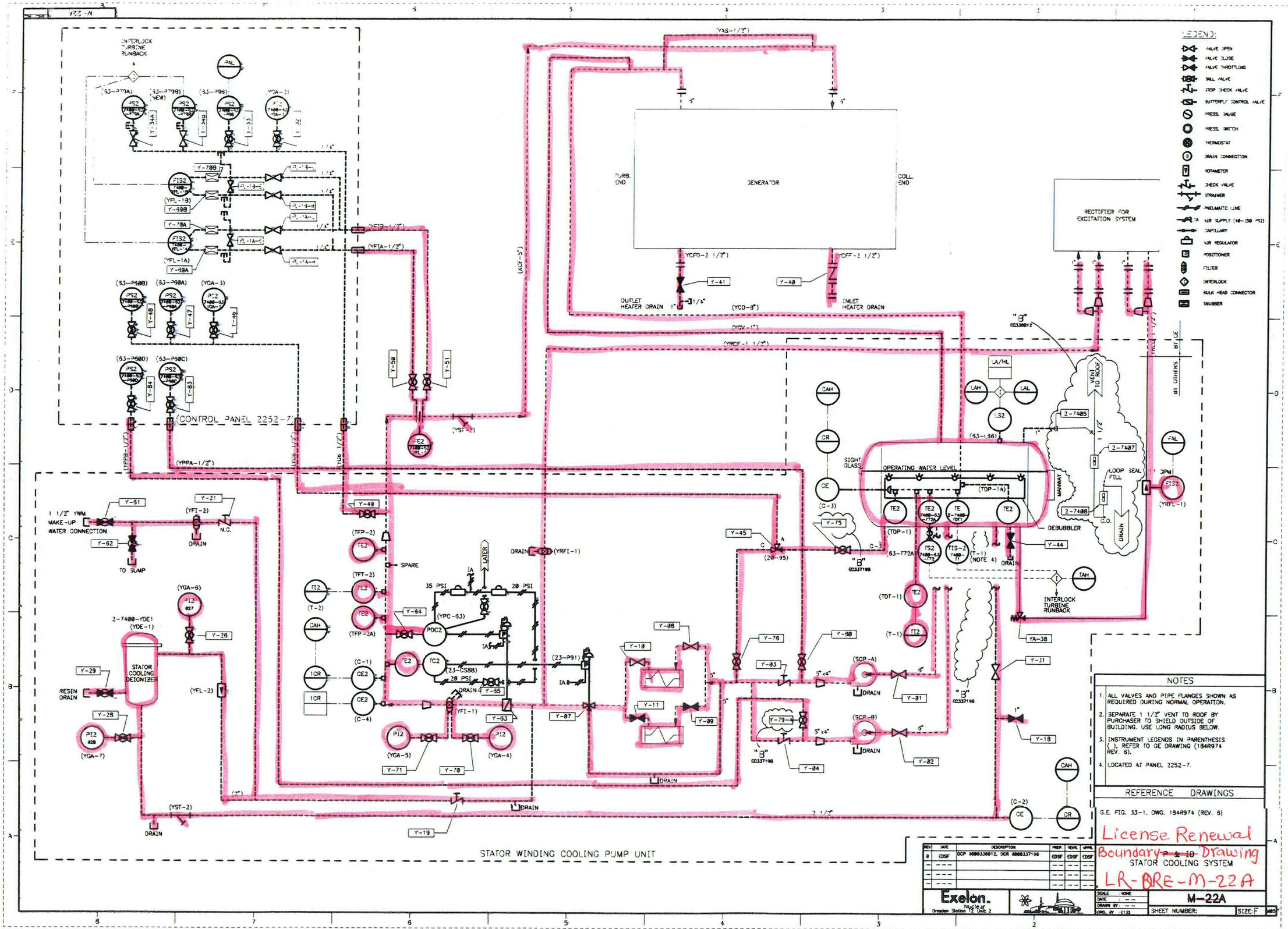

NOTES

1. ALL VALVES AND PIPE FLANGES SHOWN AS REQUIRED DURING NORMAL OPERATION.
2. SEPARATE 1 1/2" VENT TO ROOF BY PURCHASER TO SHIELD OUTSIDE OF BUILDING. USE LONG RADIUS BELOW.
3. INSTRUMENT LEGENDS IN PARENTHESIS ( ), REFER TO GE DRAWING (184R974 REV. 6).
4. LOCATED AT PANEL 2252-7.

REFERENCE DRAWINGS

G.E. FIG. 33-1, DWG. 184R974 (REV. 6)

License Renewal Boundary ~~P & ID~~ Drawing

STATOR COOLING SYSTEM

LR-DRE-M-22A

REV	DATE	DESCRIPTION	PREP.	REVR.	APPR.
0	EDSF	DCP 0000336012, DCR 0000337196	EDSF	EDSF	EDSF

Exelon. Nuclear
Dresden Station 12 Unit 2

SCALE: NONE
DATE: --
DRAWN BY: --
ORG. BY: E133

M-22A

SHEET NUMBER:

SIZE: F

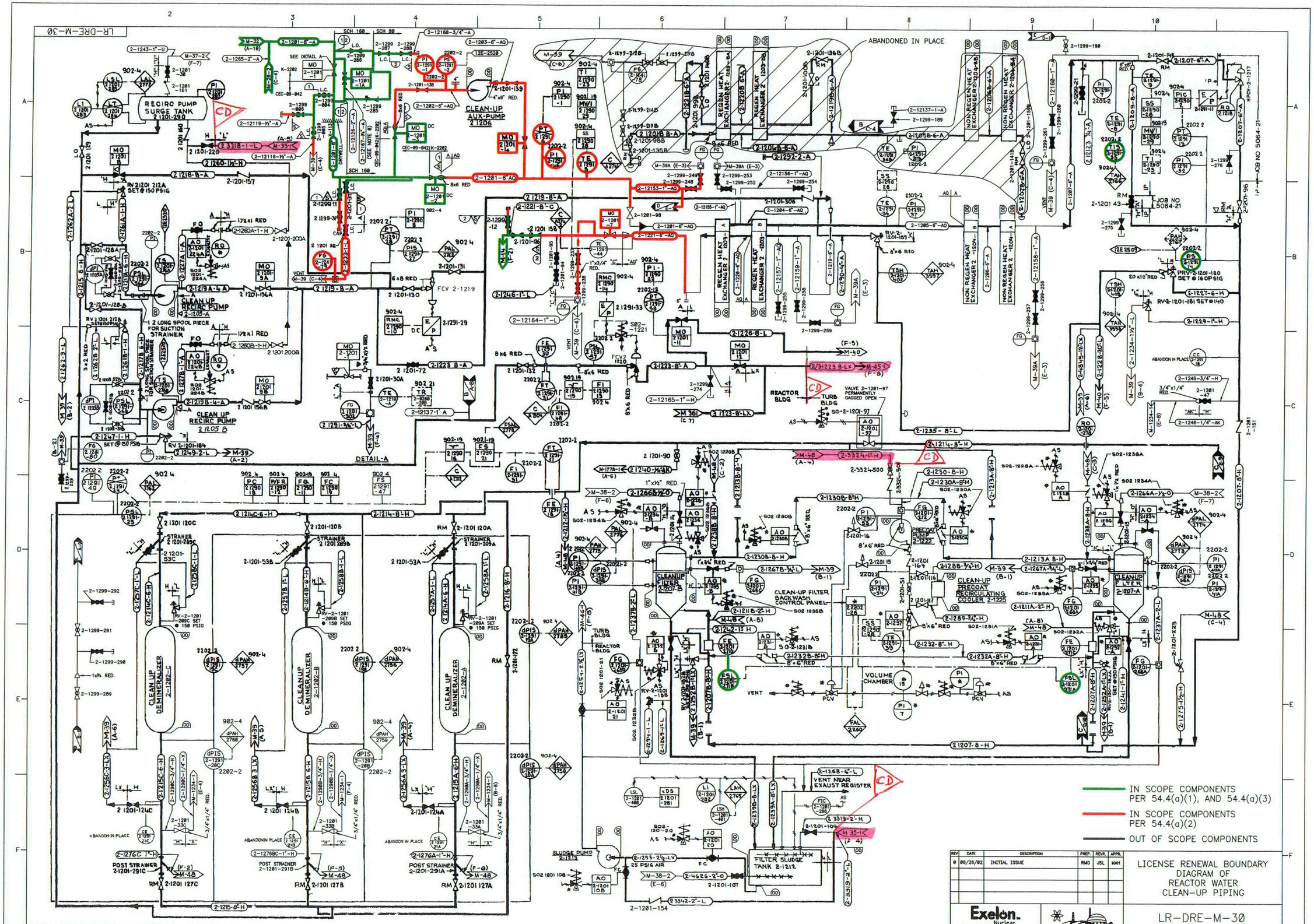
LR-DRE-M-30
RECIRC PUMP SURGE TANK 2-1201-290
CLEAN-UP AUX-PUMP 2-1206
CLEAN UP RECIRC PUMP 2-1205-A
CLEAN UP RECIRC PUMP 2-1205-B
DETAIL-A
ABANDONED IN PLACE
REGEN HEAT EXCHANGER 2-1203-A
REGEN HEAT EXCHANGER 2-1203-B
NON REGEN HEAT EXCHANGER 2-1204-A
NON REGEN HEAT EXCHANGER 2-1204-B
CLEANUP FILTER 2-1207-B
CLEANUP FILTER 2-1207-A
CLEAN-UP FILTER BACKWASH CONTROL PANEL
CLEAN-UP PRECOAT RECIRCULATING COOLER 2-1225
PRECOAT PUMP 2-1222
VOLUME CHAMBER
CLEAN UP DEMINERALIZER 2-1202-C
CLEANUP DEMINERALIZER 2-1202-B
CLEAN UP DEMINERALIZER 2-1202-A
POST STRAINER 2-1201-291C
POST STRAINER 2-1201-291B
POST STRAINER 2-1201-291A
SLUDGE PUMP 2-1213
FILTER SLUDGE TANK 2-1212
VENT NEAR EXAUST REGISTER
REACTOR BLDG
TURB BLDG
VALVE 2-1281-97 PERMANENTLY GAGGED OPEN
JOB NO 5064-21
IN SCOPE COMPONENTS PER 54.4(a)(1), AND 54.4(a)(3)
IN SCOPE COMPONENTS PER 54.4(a)(2)
OUT OF SCOPE COMPONENTS
REV DATE DESCRIPTION PREP. REVR. APPR.
0 08/26/02 INITIAL ISSUE RMD JSL MAH
LICENSE RENEWAL BOUNDARY DIAGRAM OF REACTOR WATER CLEAN-UP PIPING
Exelon. Nuclear
Dresden Station
LR-DRE-M-30

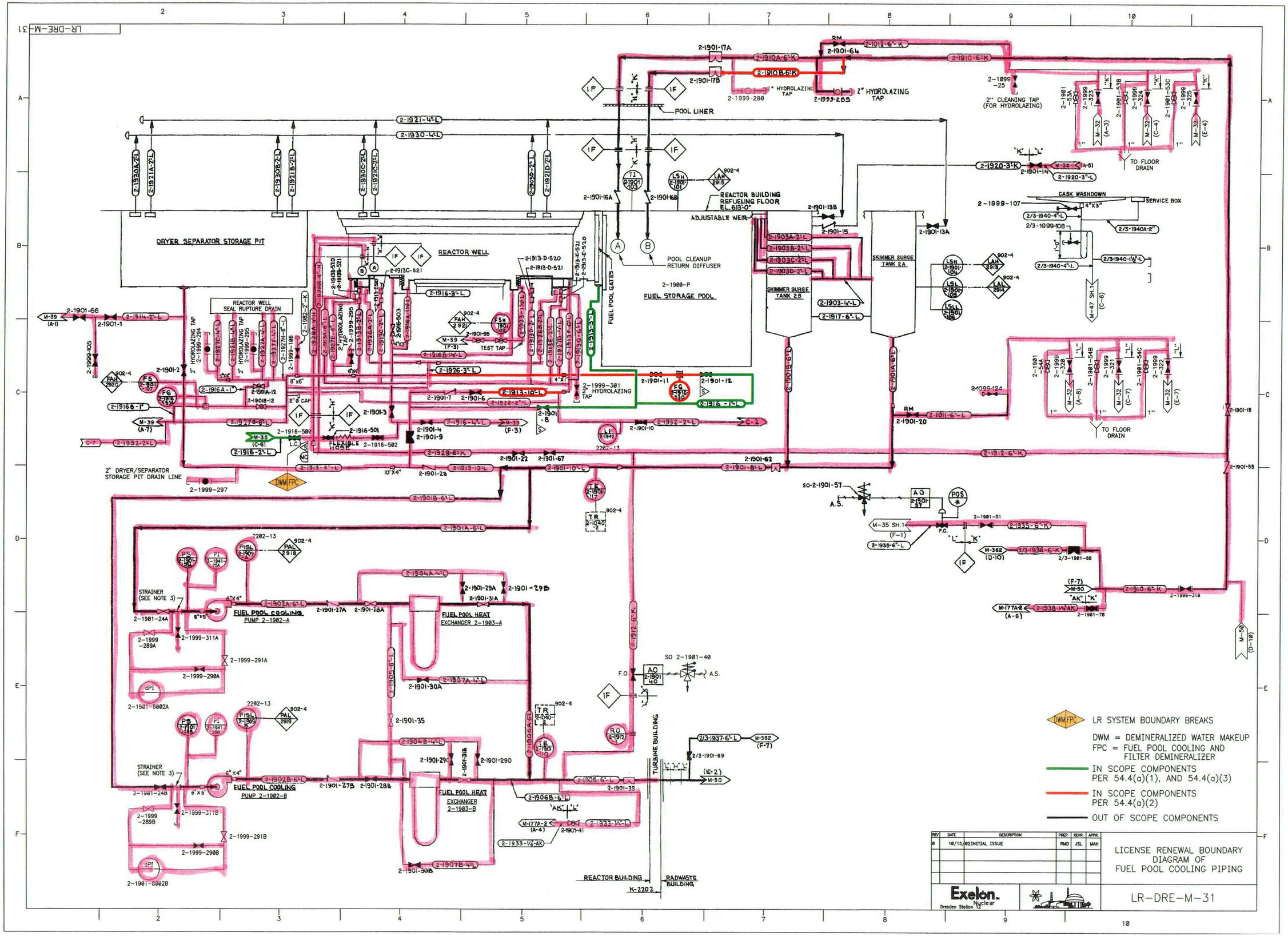
LR-DRE-M-31
DRYER SEPARATOR STORAGE PIT
REACTOR WELL
REACTOR WELL SEAL RUPTURE DRAIN
POOL LINER
REACTOR BUILDING REFUELING FLOOR EL. 613'-0"
ADJUSTABLE WEIR
POOL CLEANUP RETURN DIFFUSER
FUEL POOL GATES
FUEL STORAGE POOL
SKIMMER SURGE TANK 2A
SKIMMER SURGE TANK 2B
CASK WASHDOWN
SERVICE BOX
2" CLEANING TAP (FOR HYDROLAZING)
TO FLOOR DRAIN
2" HYDROLAZING TAP
2" DRYER/SEPARATOR STORAGE PIT DRAIN LINE
FUEL POOL COOLING PUMP 2-1902-A
FUEL POOL COOLING PUMP 2-1902-B
FUEL POOL HEAT EXCHANGER 2-1903-A
FUEL POOL HEAT EXCHANGER 2-1903-B
STRAINER (SEE NOTE 3)
TURBINE BUILDING
REACTOR BUILDING
RADWASTE BUILDING
LR SYSTEM BOUNDARY BREAKS
DWM = DEMINERALIZED WATER MAKEUP
FPC = FUEL POOL COOLING AND FILTER DEMINERALIZER
IN SCOPE COMPONENTS PER 54.4(a)(1), AND 54.4(a)(3)
IN SCOPE COMPONENTS PER 54.4(a)(2)
OUT OF SCOPE COMPONENTS
REV DATE DESCRIPTION PREP. REVR. APPR.
0 10/15/82 INITIAL ISSUE RMD JSL MAH
LICENSE RENEWAL BOUNDARY DIAGRAM OF FUEL POOL COOLING PIPING
Exelon. Nuclear
Dresden Station
LR-DRE-M-31

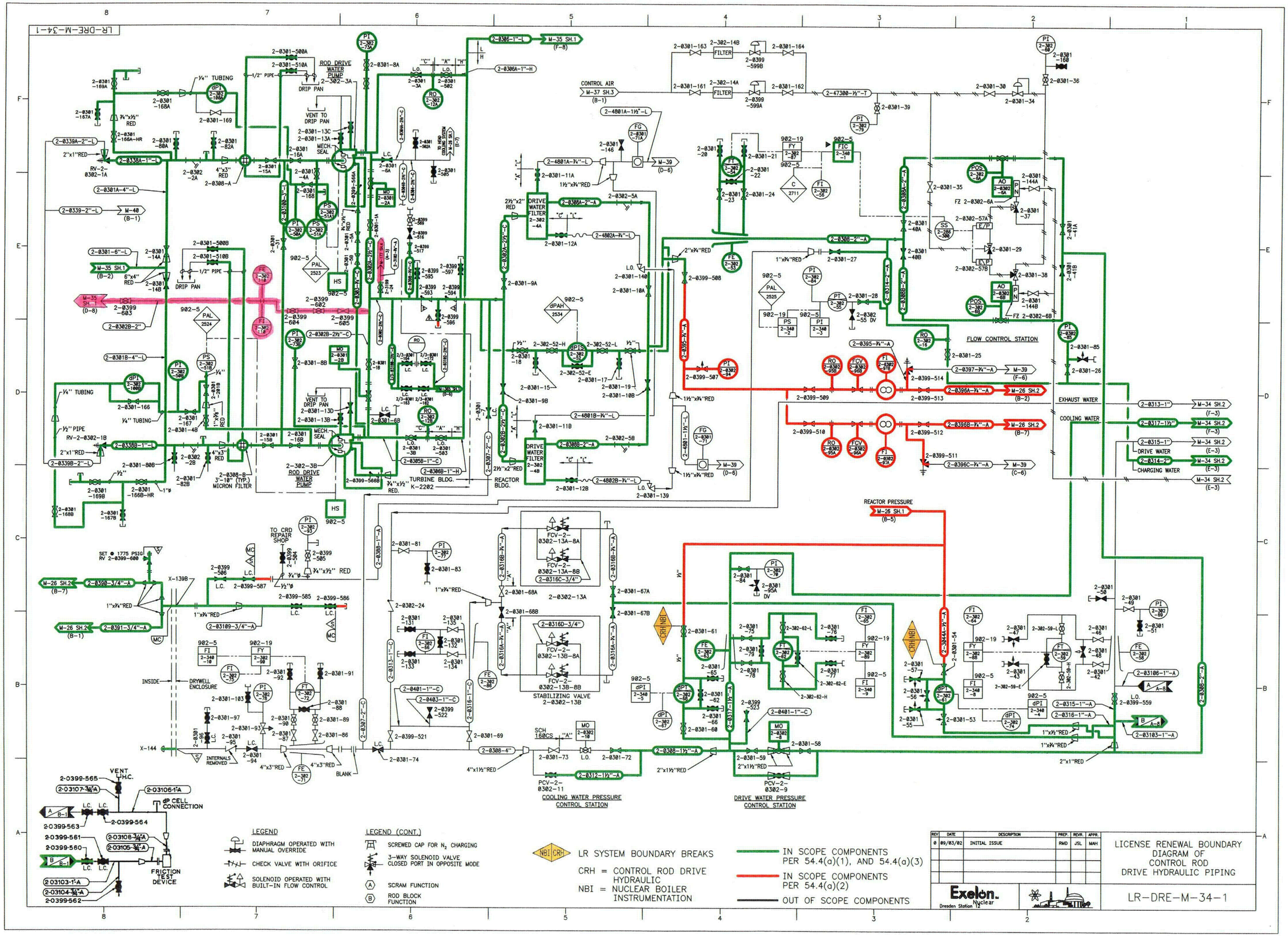
LR-DRE-M-34-1
ROD DRIVE WATER PUMP
DRIVE WATER FILTER
FILTER
CONTROL AIR
FLOW CONTROL STATION
EXHAUST WATER
COOLING WATER
DRIVE WATER
CHARGING WATER
REACTOR PRESSURE
TURBINE BLDG. K-2202
REACTOR BLDG.
TO CRD REPAIR SHOP
DRYWELL ENCLOSURE
INSIDE
INTERNALS REMOVED
STABILIZING VALVE 2-0302-13B
COOLING WATER PRESSURE CONTROL STATION
DRIVE WATER PRESSURE CONTROL STATION
dP CELL CONNECTION
FRICTION TEST DEVICE
LEGEND
DIAPHRAGM OPERATED WITH MANUAL OVERRIDE
CHECK VALVE WITH ORIFICE
SOLENOID OPERATED WITH BUILT-IN FLOW CONTROL
LEGEND (CONT.)
SCREWED CAP FOR N2 CHARGING
3-WAY SOLENOID VALVE CLOSED PORT IN OPPOSITE MODE
SCRAM FUNCTION
ROD BLOCK FUNCTION
LR SYSTEM BOUNDARY BREAKS
CRH = CONTROL ROD DRIVE HYDRAULIC
NBI = NUCLEAR BOILER INSTRUMENTATION
IN SCOPE COMPONENTS PER 54.4(a)(1), AND 54.4(a)(3)
IN SCOPE COMPONENTS PER 54.4(a)(2)
OUT OF SCOPE COMPONENTS
REV | DATE | DESCRIPTION | PREP. | REVR. | APPR.
0 | 09/03/02 | INITIAL ISSUE | RMD | JSL | MAH
Exelon. Nuclear
Dresden Station
LICENSE RENEWAL BOUNDARY DIAGRAM OF CONTROL ROD DRIVE HYDRAULIC PIPING
LR-DRE-M-34-1

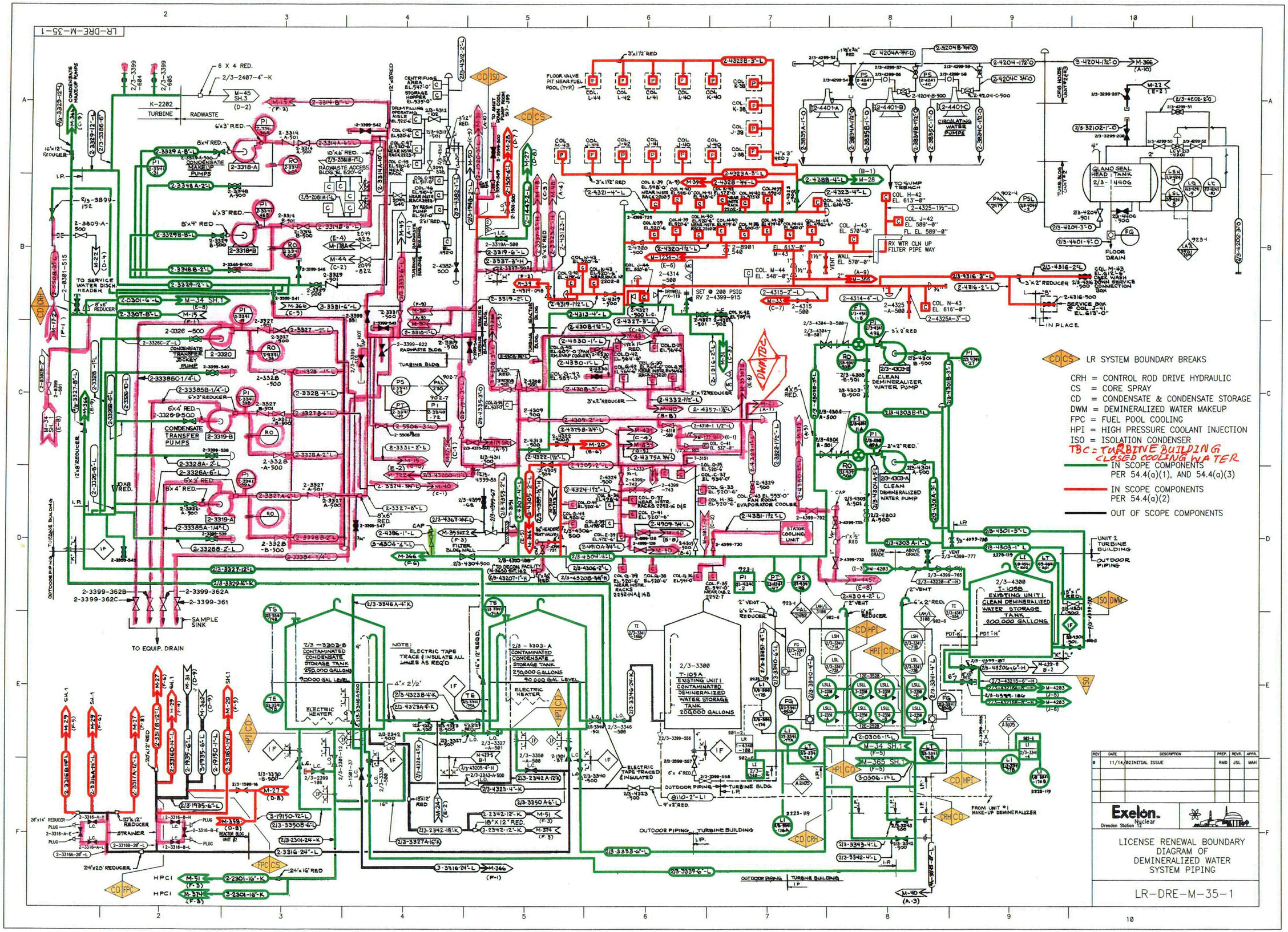
LR-DRE-M-35-1
CD CS LR SYSTEM BOUNDARY BREAKS
CRH = CONTROL ROD DRIVE HYDRAULIC
CS = CORE SPRAY
CD = CONDENSATE & CONDENSATE STORAGE
DWM = DEMINERALIZED WATER MAKEUP
FPC = FUEL POOL COOLING
HPI = HIGH PRESSURE COOLANT INJECTION
ISO = ISOLATION CONDENSER
TBC = TURBINE BUILDING CLOSED COOLING WATER
IN SCOPE COMPONENTS PER 54.4(a)(1), AND 54.4(a)(3)
IN SCOPE COMPONENTS PER 54.4(a)(2)
OUT OF SCOPE COMPONENTS
2/3-3303-B CONTAMINATED CONDENSATE STORAGE TANK 250,000 GALLONS
2/3-3303-A CONTAMINATED CONDENSATE STORAGE TANK 250,000 GALLONS
2/3-3300 T-105A EXISTING UNIT 1 CONTAMINATED DEMINERALIZED WATER STORAGE TANK 200,000 GALLONS
2/3-4300 T-105B EXISTING UNIT 1 CLEAN DEMINERALIZED WATER STORAGE TANK 200,000 GALLONS
CONDENSATE TRANSFER PUMPS
CONDENSATE MAKEUP PUMPS
CLEAN DEMINERALIZER WATER PUMP
CIRCULATING WATER PUMPS
GLAND SEAL HEAD TANK
TO EQUIP. DRAIN
SAMPLE SINK
TO SERVICE WATER DISCH. HEADER
FROM UNIT #1 MAKE-UP DEMINERALIZER
Exelon Nuclear
Dresden Station 12
LICENSE RENEWAL BOUNDARY DIAGRAM OF DEMINERALIZED WATER SYSTEM PIPING
LR-DRE-M-35-1

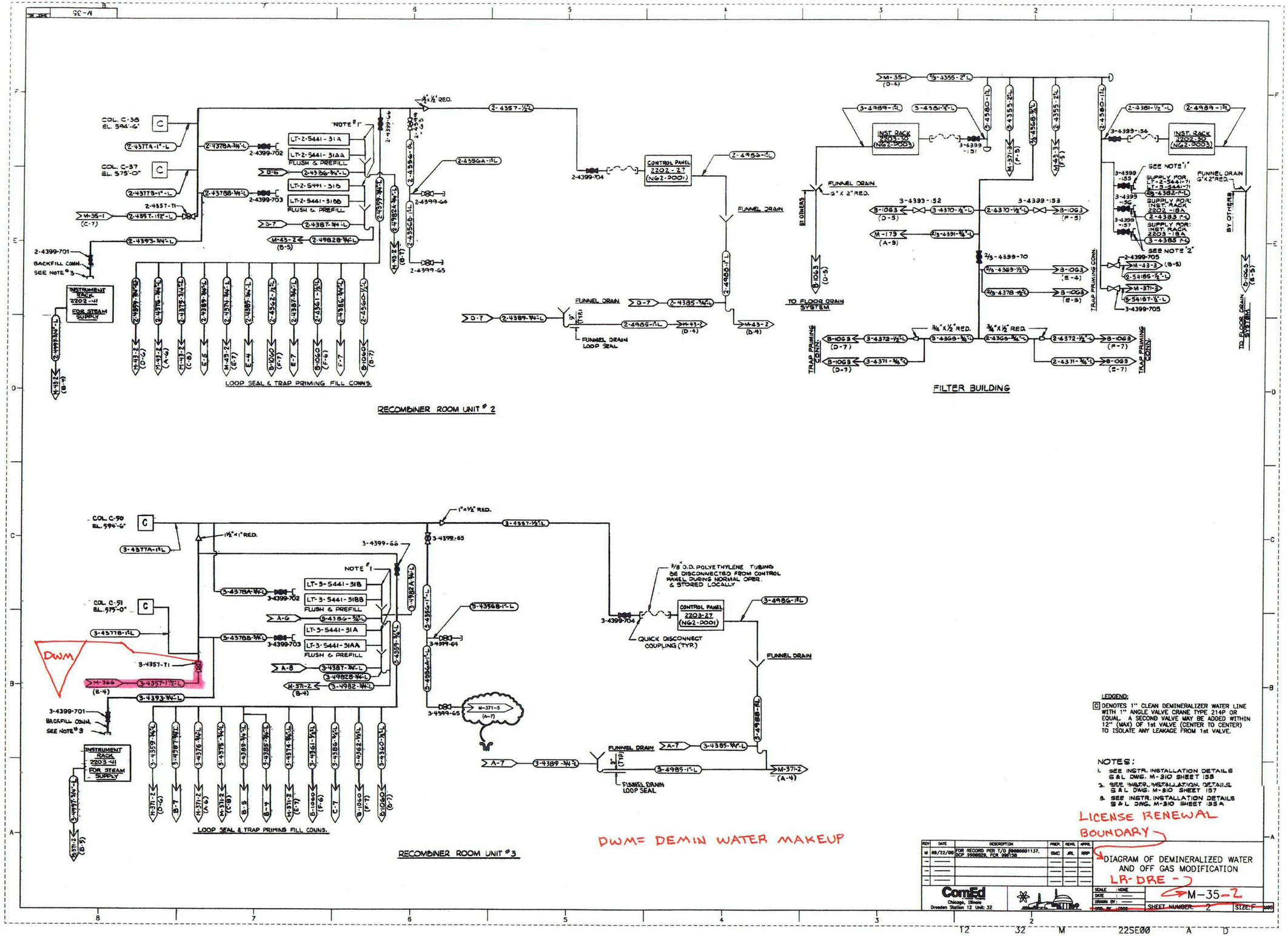

LEGEND:

C DENOTES 1" CLEAN DEMINERALIZER WATER LINE WITH 1" ANGLE VALVE CRANE TYPE 214P OR EQUAL. A SECOND VALVE MAY BE ADDED WITHIN 12" (MAX) OF 1st VALVE (CENTER TO CENTER) TO ISOLATE ANY LEAKAGE FROM 1st VALVE.

NOTES:

1. SEE INSTR. INSTALLATION DETAILS S&L DWG. M-310 SHEET 155
2. SEE INSTR. INSTALLATION DETAILS S&L DWG. M-310 SHEET 157
3. SEE INSTR. INSTALLATION DETAILS S&L DWG. M-310 SHEET 155A

LICENSE RENEWAL BOUNDARY

REV	DATE	DESCRIPTION	PREP.	REVR.	APPR.
M	09/22/00	FOR RECORD PER T/O 99000001137, DCP 9900029, FCR 990158	BMC	JRL	RRP

DIAGRAM OF DEMINERALIZED WATER AND OFF GAS MODIFICATION

LR-DRE -

ComEd
Chicago, Illinois
Dresden Station 12 Unit: 32

SCALE: NONE
DATE:
DRAWN BY:
CHK. BY: CSCO

M-35-2

SHEET NUMBER: 2 SIZE: F

12 32 M 22SE00 A D

LR-DRE-M-36

DISCHARGE CANAL

8'-0" CORRUGATED PIPE (ICE MELTING)

CHEMICAL INHIBITOR TANK 2/3-4534 (CWE 15)

SILT DISPERSANT TANK 2/3-4535 (CWE 20)

HYPOCHLORITE TANK 2/3-4533

SCALE INHIBITOR TANK 2/3-4536 (CWE 16)

FEED HOUSE

CRIB HOUSE

CIRCULATING WATER PUMPS

SCREEN REFUSE SUMP & PUMPS

BAY 13

TYPICAL DETAIL
FOR PUMP & MOTOR BEARING OIL DRAIN
FOR CIRCULATING WATER PUMPS:

CONDENSER 3-3301

CONDENSER 2-3301

CONDENSER DEWATERING PUMP 3-4407

CONDENSER DEWATERING PUMP 2-4407

DGCUHS LR SYSTEM BOUNDARY BREAKS

DGC = DIESEL GENERATOR COOLING WATER
UHS = ULTIMATE HEAT SINK
CW = CIRCULATING WATER

IN SCOPE COMPONENTS PER 54.4(a)(1), AND 54.4(a)(3)

OUT OF SCOPE COMPONENTS

REV	DATE	DESCRIPTION	PREP.	RVWR.	APPR.
0	09/04/02	INITIAL ISSUE	SP	JSL	MAH

Exelon. Nuclear
Dresden Station

LICENSE RENEWAL BOUNDARY DIAGRAM OF CIRCULATING WATER AND HYPOCHLORITE PIPING

LR-DRE-M-36

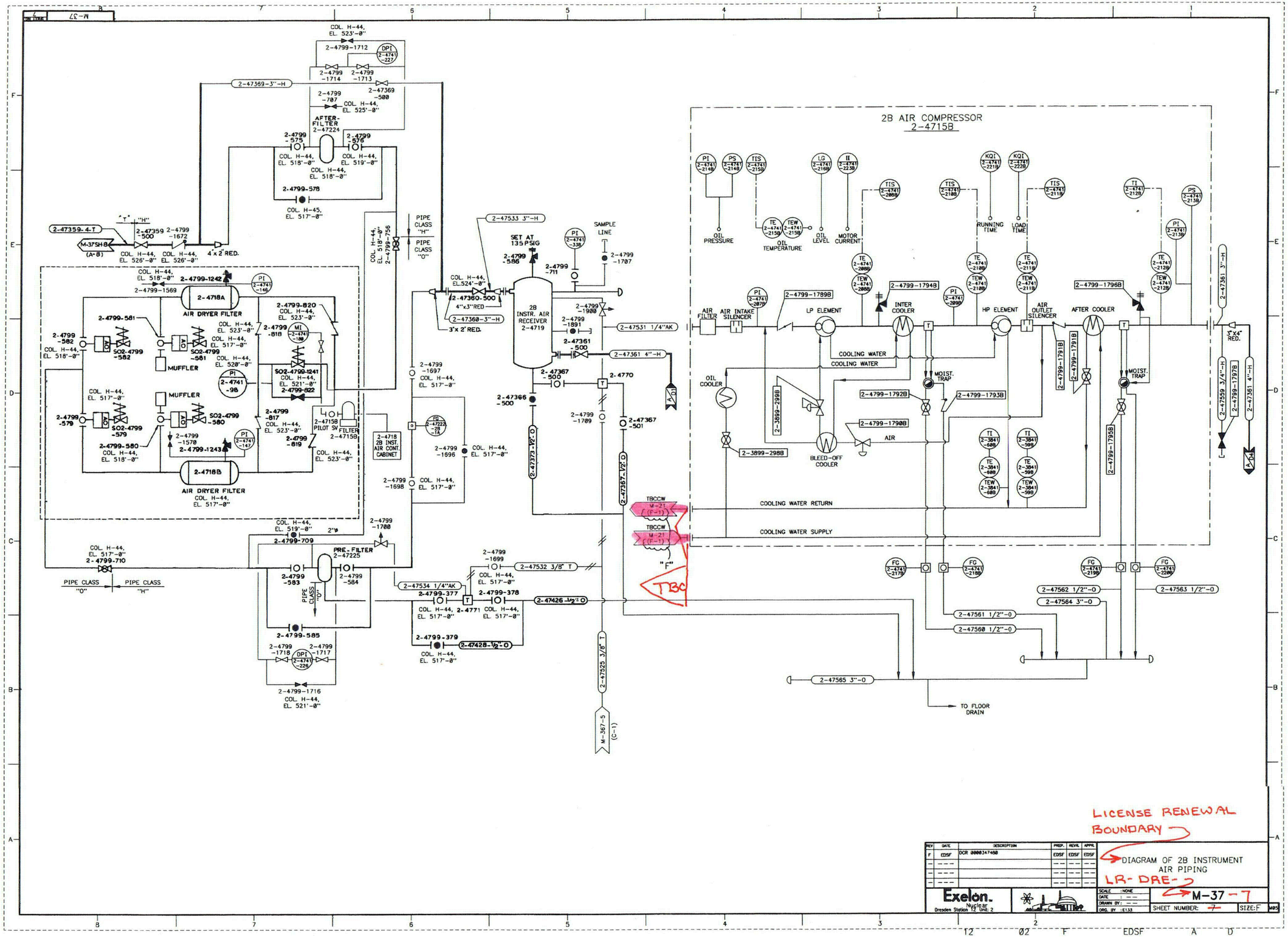
2B AIR COMPRESSOR
2-4715B
AIR DRYER FILTER
2-4718A
2-4718B
AFTER-FILTER
2-47224
PRE-FILTER
2-47225
2B INSTR. AIR RECEIVER
2-4719
SET AT 135 PSIG
SAMPLE LINE
2B INST. AIR CONT. CABINET
AIR FILTER
AIR INTAKE SILENCER
LP ELEMENT
INTER COOLER
HP ELEMENT
AIR OUTLET SILENCER
AFTER COOLER
OIL COOLER
BLEED-OFF COOLER
MOIST. TRAP
COOLING WATER
COOLING WATER RETURN
COOLING WATER SUPPLY
TO FLOOR DRAIN
LICENSE RENEWAL BOUNDARY
DIAGRAM OF 2B INSTRUMENT AIR PIPING
LR-DRE-
M-37-7
Exelon. Nuclear
Dresden Station U2 Unit 2
SHEET NUMBER: 7
SIZE: F

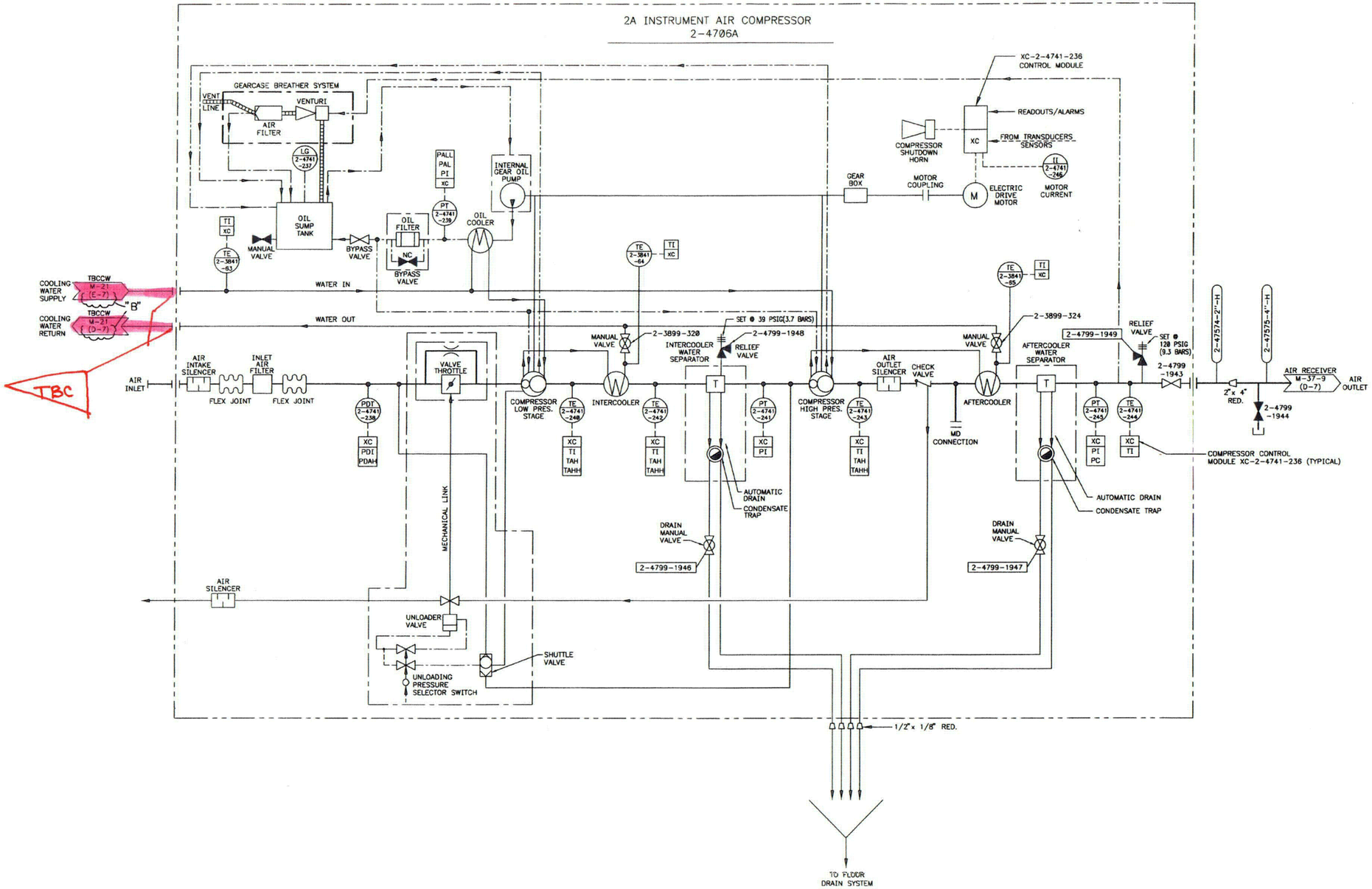

LICENSE RENEWAL BOUNDARY

REV	DATE	DESCRIPTION	PREP.	REVR.	APPR.
9	EDSF	DCR 00003474B8	EDSF	EDSF	EDSF

DIAGRAM OF 2A INSTRUMENT AIR PIPING

LR-DRE-

Exelon. Nuclear
Dresden Station 12 Unit: 2

SCALE : NONE
DATE : --
DRAWN BY : --
ORG. BY : C133

M-37-10

SHEET NUMBER: ~~10~~ SIZE: F

12 Ø2 B EDSF A D

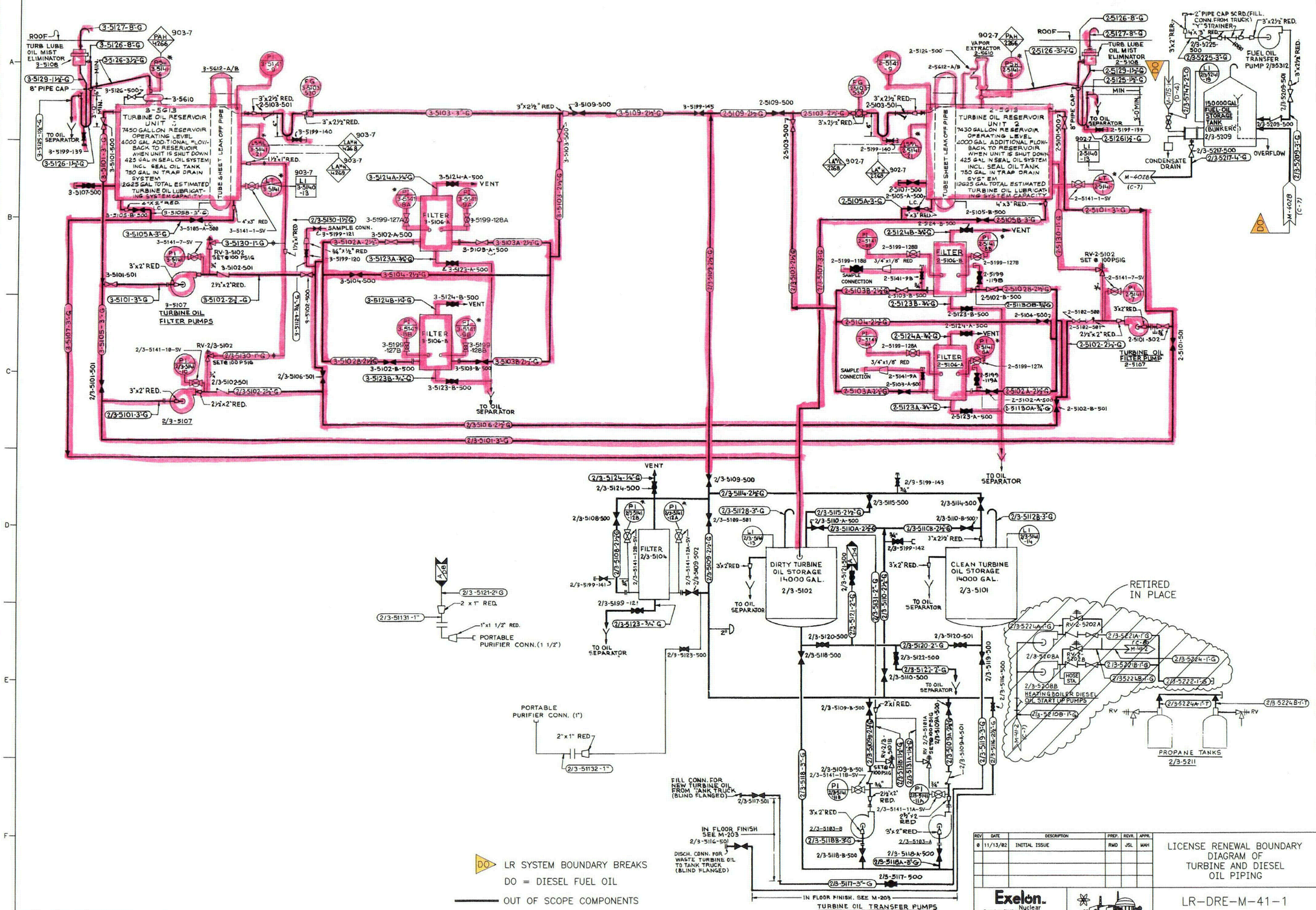

REV	DATE	DESCRIPTION	PREP.	REVR.	APPR.
0	11/13/82	INITIAL ISSUE	RMD	JSL	MAH

Exelon. Nuclear
Dresden Station

LICENSE RENEWAL BOUNDARY DIAGRAM OF TURBINE AND DIESEL OIL PIPING

LR-DRE-M-41-1

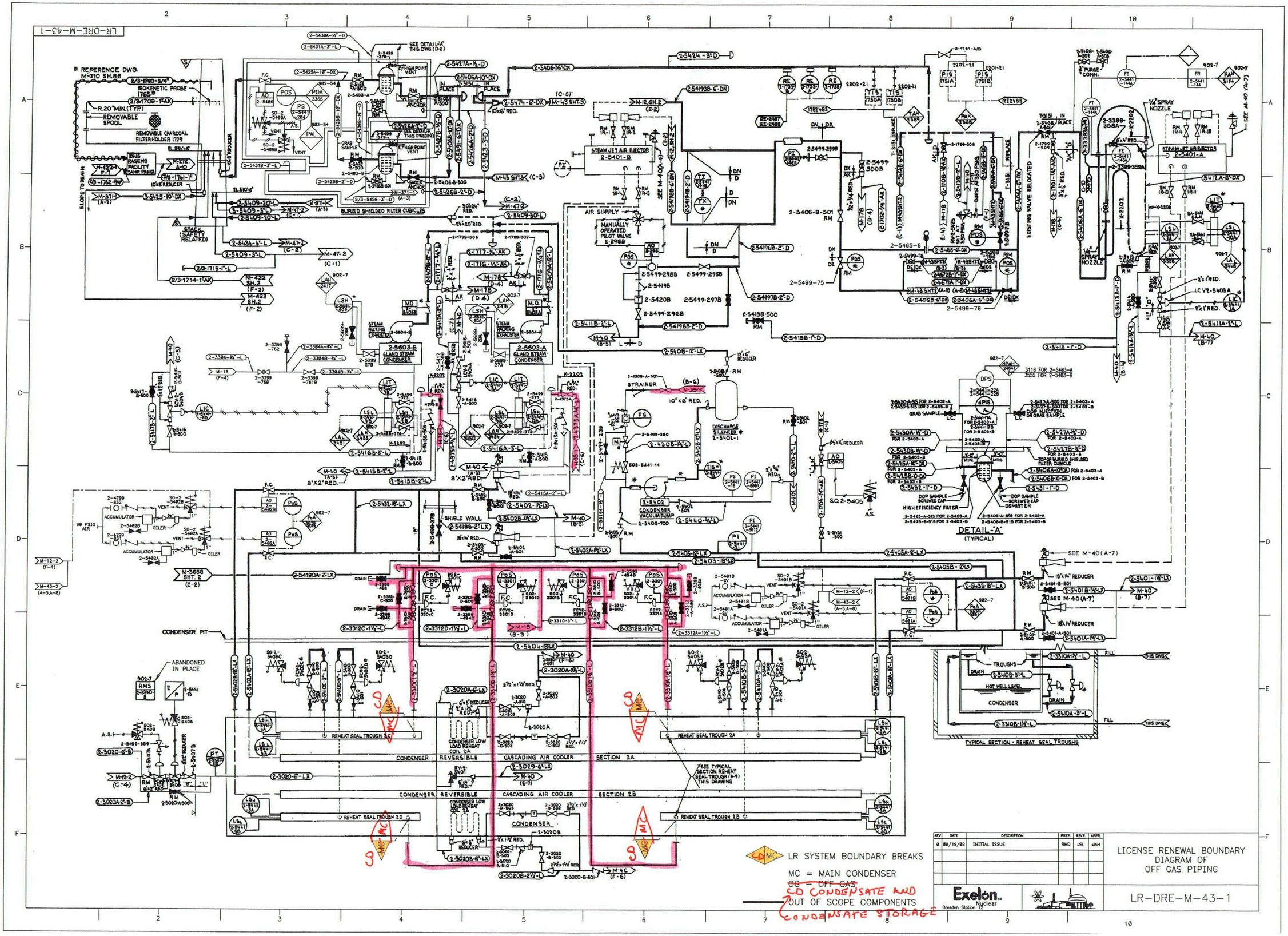
LR-DRE-M-43-1
REFERENCE DWG. M-310 SH.66
ISOKINETIC PROBE 1765
REMOVABLE SPOOL
REMOVABLE CHARCOAL FILTER HOLDER 1779
SLOPE TO DRAIN
STACK (SAFETY RELATED)
BURIED SHIELDED FILTER CUBICLES
STEAM JET AIR EJECTOR 2-5401-B
STEAM JET AIR EJECTOR 2-5401-A
MANUALLY OPERATED PILOT VALVE 2-298B
AIR SUPPLY
EXISTING VALVE RELOCATED
2-5603-B GLAND STEAM CONDENSER
2-5603-A GLAND STEAM CONDENSER
STEAM PACKING EXHAUSTER
STRAINER
DISCHARGE SILENCER 2-5401-1
2-5402 CONDENSER VACUUM PUMP
DETAIL "A" (TYPICAL)
SHIELD WALL
CONDENSER PIT
ABANDONED IN PLACE
REHEAT SEAL TROUGH 2C
REHEAT SEAL TROUGH 2A
REHEAT SEAL TROUGH 2D
REHEAT SEAL TROUGH 2B
CONDENSER REVERSIBLE CASCADING AIR COOLER SECTION 2A
CONDENSER REVERSIBLE CASCADING AIR COOLER SECTION 2B
CONDENSER LOW LOAD REHEAT COIL 2A
CONDENSER LOW LOAD REHEAT COIL 2B
CONDENSER
TROUGHS
HOT WELL LEVEL
TYPICAL SECTION - REHEAT SEAL TROUGHS
LR SYSTEM BOUNDARY BREAKS
MC = MAIN CONDENSER
~~OG = OFF GAS~~
CD CONDENSATE AND CONDENSATE STORAGE
OUT OF SCOPE COMPONENTS
REV DATE DESCRIPTION PREP. REVR. APPR.
0 09/19/02 INITIAL ISSUE RMD JSL MAH
Exelon. Nuclear
Dresden Station
LICENSE RENEWAL BOUNDARY DIAGRAM OF OFF GAS PIPING
LR-DRE-M-43-1