AmerenUE
Callaway Plant

PO Box 620
Fulton, MO 65251

May 7, 2004

U.S. Nuclear Regulatory Commission
Attn: Document Control Desk
Mail Stop P1-137
Washington, DC 20555-0001

ULNRC-04993

Ladies and Gentlemen:

10 CFR 50.55a

DOCKET NUMBER 50-483
CALLAWAY PLANT
UNION ELECTRIC CO.
REVISION OF REQUEST FOR RELIEF FROM ASME SECTION XI REQUIREMENTS IN ORDER TO TEMPORARILY RESTORE WALL THICKNESS OF ASME CLASS 2 CARBON STEEL MAIN FEEDWATER PIPING BY WELD OVERLAY REINFORCEMENT

Pursuant to 10CFR50.55a(a)(3)(i), and by letter ULNRC-04875 dated July 22, 2003, as revised by letter ULNRC-04942 dated January 22, 2004, Union Electric Company (AmerenUE) submitted for NRC approval a request for relief from requirements in Section XI of the American Society of Mechanical Engineers Boiler and Pressure Vessel Code (ASME Code) to permit temporary weld overlay reinforcement of potentially affected ASME Class 2 carbon steel piping sections associated with the main feedwater system at Callaway. In its July 22, 2003 letter, AmerenUE requested NRC approval of the requested relief by March 1, 2004, i.e., in advance of the forthcoming refueling outage (RF-13). In accordance with that request, NRC approval was obtained prior to the onset of RF-13 which is now underway at Callaway. The requested relief was granted by NRC letter dated April 7, 2004, which included a safety evaluation prepared by the NRC's Office of Nuclear Reactor Regulation.

As described in AmerenUE's letter(s) and as acknowledged in the NRC's April 7 letter, the intended scope of the relief request was limited to particular areas in the feedwater system piping where, due to wall thinning monitored under Callaway's Flow-Accelerated Corrosion (FAC) program, projected pipe wall thicknesses may be less than desired, as determined by inspections that were anticipated to be done during RF-13 and which have now been completed. It was explained in the July 22, 2003 letter that since the potentially affected pipe sections are to be replaced during Callaway's 14th refueling outage (RF-14, scheduled for Fall 2005) due to planned

A047

replacement of the steam generators in that refueling outage, application of any needed weld overlays in RF-13 would restore pipe wall thicknesses to ensure more than adequate margin for the period of plant operation between RF-13 and RF-14. This would preclude the possibility of having to replace the affected piping sections twice in consecutive outages (i.e., once in RF-13 and then again in RF-14). The service life of the weld overlay(s) permitted by the relief request was thus requested (and approved) to be one operating cycle.

It may now be reported that with the recent completion of the feedwater piping inspections during the current refueling outage (RF-13), none of the pipe sections identified in AmerenUE's approved relief request has been identified as requiring weld overlay. That is, the inspections confirmed that the existing pipe wall thicknesses and pipe wall thinning rates are such that adequate margin to design minimum wall thickness exists for all of the identified pipe sections until replacement in RF-14. However, the inspections did reveal greater-than-expected pipe wall thinning in one pipe section *not* identified in AmerenUE's relief request, and it has been determined that this particular pipe section should receive weld overlay reinforcement.

As noted previously, all of the pipe sections identified in AmerenUE's approved relief request are associated with the main feedwater system at Callaway. The pipe section identified for weld overlay is at a 90° elbow upstream from the 45° elbow identified as one of the pipe sections in the relief request. Pipe wall thinning was confirmed in an upstream area of the 90° elbow. This pipe section was not previously identified as one particularly susceptible to pipe wall thinning, and so it was not included in the list of affected pipe sections in AmerenUE's relief request. Nevertheless, the section was still subject to inspection under the FAC program, and results from that inspection have confirmed the need for overlay reinforcement based on the approach that was to be taken for the other identified pipe sections. It is important to note the justification for weld overlay reinforcement that was provided for the identified pipe sections in the approved relief request applies to this pipe section as well. That is, weld overlay reinforcement will restore the wall thickness of the piping to a value greater than design minimum wall thickness with adequate margin, taking into account the determined wear rate, for a service life of one operating cycle. Overlay reinforcement of this pipe section will thus ensure a sufficient level of safety and provide adequate structural integrity for one operating cycle.

Based on the above, AmerenUE is submitting for NRC review and approval a revision of the subject weld-overlay relief request to incorporate the additional, identified pipe section. The revised relief request is attached. Revision bars have been applied to indicate the changes made to the relief request.

AmerenUE intends to apply the weld overlay to the newly identified pipe section during the current/ongoing refueling outage. Therefore, AmerenUE respectfully requests NRC approval of the revised relief request as soon as possible. It should be noted that, with regard to plant restart from the current outage, entry into plant heat-up conditions is currently projected to occur during the weekend of May 22. NRC approval is therefore requested on or by Friday, May 21, in anticipation of plant heat-up.

Please contact me at 573-676-8659 or Dave Shafer at 314-554-3104 for any questions you may regarding the revised relief request.

Sincerely,

Keith D. Young

Keith D. Young
Manager, Regulatory Affairs

TBE/jdg

Enclosure

cc: U.S. Nuclear Regulatory Commission (Original and 1 copy)
Attn: Document Control Desk
Mail Stop P1-137
Washington, DC 20555-0001

Mr. Bruce S. Mallett
Regional Administrator
U.S. Nuclear Regulatory Commission
Region IV
611 Ryan Plaza Drive, Suite 400
Arlington, TX 76011-4005

Senior Resident Inspector
Callaway Resident Office
U.S. Nuclear Regulatory Commission
8201 NRC Road
Steedman, MO 65077

Mr. Jack N. Donohew (2 copies)
Licensing Project Manager, Callaway Plant
Office of Nuclear Reactor Regulation
U. S. Nuclear Regulatory Commission
Mail Stop 7E1
Washington, DC 20555-2738

Missouri Public Service Commission
Governor Office Building
200 Madison Street
PO Box 360
Jefferson City, MO 65102-0360

Request to Restore Wall Thickness of ASME Class 2 Carbon Steel Main Feedwater Piping by Weld Overlay Reinforcement

Background

As an alternative to piping replacement in accordance with ASME Section XI IWC-4000, and pursuant to the provisions of 10CFR 50.55a(a)(3)(i), Callaway Plant requests permission to restore the wall thickness of high energy ASME Class 2 feedwater piping by weld overlay. Requested service life of the weld overlay reinforcement is one operating cycle from Refuel 13 to Refuel 14. Piping reinforced by weld overlay will be cut out and replaced during installation of new steam generators in Refuel 14.

The 1989 Edition with no Addenda of ASME Section XI currently governs repair/replacement activities at the Callaway Nuclear Plant. Callaway Plant is currently in the second 10-year inservice inspection interval, which began on August 1, 1995. The 1974 Edition with Summer 1975 Addenda of ASME Section III is the Construction Code for the main feedwater piping system.

Areas Identified that May Require Weld Overlay Reinforcement

The Callaway Flow Accelerated Corrosion (FAC) program is used to monitor and evaluate the remaining life of ASME Class 2 feedwater piping at the Callaway plant. Evaluation and ultrasonic wall thickness examinations have revealed a small number of locations where repair and/or piping replacement will be necessary in the future. Table 1 lists feedwater piping areas where repair by overlay reinforcement is requested. The piping/part description, Callaway location identifier, nominal pipe size, pipe schedule, and base material type are listed for each location. Table 2 provides wall thickness data for these locations. The design minimum wall thickness, measured wall thickness, projected wall thickness, and expected margin are provided for each location. The maximum projected axial length requiring overlay reinforcement (L dimension in Figure 1) is expected to be 8 inches or less.

Justification for Weld Overlay Reinforcement

Projections based on calculated wear rates and ultrasonic examination data obtained during Refuel 11 and Refuel 12 indicate weld overlay reinforcement may be necessary to maintain the required structural integrity until Refuel 14 when new steam generators will be installed. Piping reinforced by weld overlay will be cut out and replaced during installation of the new steam generators.

The piping areas that may require weld overlay reinforcement are relatively small localized areas. Adjacent areas have been inspected and verified to have wall thickness that meets design requirements. Weld overlay reinforcement will restore wall thickness of the piping to a value greater than or equal to design minimum wall thickness with adequate margin, considering predicted wear rates, to provide a service life of one operating cycle. In addition, the weld overlay material is not predicted to become exposed to feedwater during the cycle. The weld overlay will have a uniform width and extend 360 degrees circumferentially around the piping. The proposed overlay reinforcement will ensure a sufficient level of safety and provide adequate structural integrity for one operating cycle.

The weld overlay reinforcement alternative will result in a significant reduction in personnel radiation exposure during refueling outage maintenance work. In addition, by avoiding replacement of the piping during Refuel 13 and again in Refuel 14, outage duration and costs are reduced by decreasing the overall scope of work.

Requirements for Restoration of Internal Wall Thinning by Weld Overlay

Weld overlay reinforcement on the outside surface of the piping shall be installed in accordance with the following requirements and rules:

1. **General Requirements**

   1.1. The weld overlay(s) installed to restore wall thickness shall be performed in accordance with the Callaway Repair/Replacement Program [1].

   1.2. The wall thickness restoration shall meet all requirements of the Callaway Repair/Replacement Program except as permitted in this relief request.

2. **Initial Evaluation**

   2.1. The piping base material where the weld overlay is to be installed shall be evaluated to establish the existing average wall thickness and the extent and configuration of degradation to be reinforced by the weld overlay.

   2.2. Areas of piping, parts, or components, adjacent to the identified overlay area shall be examined to verify that the entire defect area will be encompassed as necessary by the weld overlay and to validate any design assumptions relative to the structural integrity of the piping.

3. **Weld Overlay Design**

   3.1. The thickness of the weld overlay reinforcement shall not exceed 1/4 inch. See thickness dimension *W* in Figure 1.

   3.2. Evaluation of areas that require restoration by weld overlay shall consider the design life of the piping, future internal wall thinning in the weld overlay area, and shall be based on the design thickness as prescribed by ASME Section III [2].

   3.3. The weld overlay shall have a uniform width and extend 360 degrees circumferentially around the piping.

   3.4. Unless otherwise established by design analysis, the weld overlay shall extend axially a distance of at least *s* in each direction beyond the area that requires restoration, where *s* is defined as:

   $$s \geq \tfrac{3}{4}\sqrt{\bar{R}t_{nom}}$$

   $\bar{R}$ = *average outer radius of the component*

   t_{nom} = *nominal wall thickness of the component*

   3.5. Edges of the weld overlay shall be tapered to the existing piping surface to a maximum angle of 45°. See angle α shown in Figure 1.

   3.6. Final configuration of the weld overlay reinforcement shall permit nondestructive examination as required in 5.1 and 5.2.

   3.7. Except for the tapered edges, the weld overlay reinforcement shall have a uniform thickness.

   3.8. Tensile strength of the weld filler metal used for the overlay shall be at least that specified for the piping base material.

---

[1] The Callaway Repair/Replacement Program is in accordance with the 1989 Edition of ASME Section XI.

[2] ASME Section III, 1974 with Summer 1975 Addenda is the Construction Code for the feedwater system.

3.9. Design shall be in accordance with ASME Section III [3] and shall consider the weld overlay as an integral portion of the piping upon which it is applied (not as a weld).

3.10. The allowable stress values of the base metal shall apply to the design of the deposited weld metal.

3.11. The following factors shall be considered in design of the weld overlay reinforcement:

3.11.1. The effects on the piping system of radial and longitudinal shrinkage caused by application of the overlay;

3.11.2. The effects on flexibility, stress concentration, and section properties of the added section thickness;

3.11.3. Stress concentrations resulting from existing and predicted piping internal surface configuration;

3.11.4. The effects of different coefficients of thermal expansion between the weld overlay filler metal and the base metal.

3.12. The effect of the weld overlay shall be reconciled with the original flexibility analysis required by ASME Section III [3]. Unless a lower stress intensification factor (SIF or i) is established, an SIF(i) of 2.1 shall be applied for overlays on straight pipe and adjacent welds; a stress multiplier of 1.7 shall be applied to the SIF(i) for standard elbows; and an SIF(i) of 2.1 shall be applied for tees and branch connections when the toe of the overlay is not less than $2.5\sqrt{\bar{R}t_{nom}}$ from any branch reinforcement.

4. Installation

4.1. The entire surface area to which the weld overlay is to be installed shall be examined using either the liquid penetrant (PT) or magnetic particle (MT) test method. Acceptance criteria shall be in accordance with NC-2500/5300 [3] for the specific product form that was examined (e.g., base material or weld metal).

4.2. The weld overlay reinforcement shall be installed in accordance with the Callaway Repair/Replacement Program.

4.3. The overlay weld metal shall be installed using a groove weld procedure qualified in accordance with ASME Section IX and Section III [3].

4.4. The surface of the final overlay reinforcement shall be prepared by machining or grinding as necessary to permit performance of surface and wall thickness examination.

5. Examination

5.1. The completed weld overlay reinforcement shall be examined using liquid penetrant (PT) or magnetic particle (MT) test method. The acceptance criteria shall be in accordance with ASME Section III, NC-5300 [3].

5.2. The weld overlay reinforcement and the base material below the reinforcement shall be examined by ultrasonic examination to verify acceptable wall thickness.

6. Documentation

Use of this relief request shall be documented as specified in the Callaway Repair/Replacement Program.

---

[3] ASME Section III, 1974 with Summer 1975 Addenda

Table 1: Feedwater Piping Areas That May Require Weld Overlay Reinforcement

Area Description	FAC ID No. [1 & 2]	NPS [3]	Sch.	Mat.
Downstream area of A S/G 14" by 16" expander	AE04-DE7E	16	80	CS
Downstream area of C S/G 14" by 16" expander	AE05-B5E	16	80	CS
Downstream area of D S/G 14" by 16" expander	AE05-CD7E	16	80	CS
Upstream area of 45° elbow upstream of AEV0122	AE05-E645	14	80	CS
Upstream area of 90° elbow downstream of AEV0123	AE05-AB590	14	80	CS
Midspan area of A S/G 5D bend	AE04-E890	14	80	CS
Midspan area of B S/G 5D bend	AE04-C4590	14	80	CS
Midspan area of C S/G 5D bend	AE05-B590	14	80	CS
Midspan area of D S/G 5D bend	AE05-D890	14	80	CS
Upstream area of 90° elbow upstream of AEV0122	AE05-E690	14	80	CS

Notes:
1. *Listed FAC ID Numbers are those currently identified in the Callaway FAC Program.*
2. *Figures 2 and 3 show location of areas by FAC ID No.*
3. *NPS is pipe size of area for weld overlay reinforcement.*

Table 2: Feedwater Piping Wall Thickness Data [1]

FAC ID No.	Location	Design [2] Min	Wear Rate (mils/yr)	RF11 [3] measured	RF12 [3] measured	RF13 [4] projected	RF13 [4] margin	RF14 [4] projected	RF14 [4] margin
AE04-DE7E	Upstream	0.489	8.203	0.549	0.514	0.502	0.013	0.490	0.001
AE04-DE7E	Downstream	0.680	7.590	0.687	0.687	0.676	**-0.004**	0.665	**-0.015**
AE04-E890	General	0.614	11.122	0.700	0.676	0.659	0.045	0.642	0.028
AE04-C4590	General	0.643	8.347	0.671	0.684	0.671	0.028	0.658	0.015
AE05-B5E	Upstream	0.489	9.421	0.544	0.519	0.505	0.016	0.491	0.002
AE05-B5E	Downstream	0.559	8.513	0.649	0.644	0.631	0.072	0.618	0.059
AE05-B590	General	0.643	12.603	0.650	0.663	0.644	0.001	0.625	**-0.018**
AE05-AB590	General	0.489	12.522	0.535	0.510	0.491	0.002	0.472	**-0.017**
AE05-CD7E	Upstream	0.489	8.185	0.609	0.603	0.591	0.102	0.579	0.090
AE05-CD7E	Downstream	0.680	7.434	0.693	0.685	0.674	**-0.006**	0.663	**-0.017**
AE05-D890	General	0.614	10.950	0.655	0.649	0.633	0.019	0.617	0.003
AE05-E645	General	0.489	9.776	0.535	0.516	0.501	0.012	0.486	**-0.003**
AE05-E690	General	0.403	44.000 [5]	0.577	no data	0.459 [6]	0.056	0.393	***-0.010***

Notes:
1. *Wall thickness values are in inches.*
2. *General design minimum wall was determined by analysis at each location. Structural integrity was verified by additional detailed analysis at specific locations where the measured wall thickness encroached on general design minimum wall thickness.*
3. *Anomalous UT readings are attributed to changes in inspection personnel and test equipment and are considered within acceptable tolerances. These variances do not adversely impact the model for calculating projected wear.*
4. *Projected wall thickness is based on average wear rates determined by the Callaway FAC program. Wall thickness margin is the difference between the projected thickness and the design minimum.*
5. *This wear rate is based on the difference of minimum measured wall thickness from Refuel 11 and Refuel 13 divided by the operating time. This results in a highly conservative wear rate estimate.*
6. *Measured wall thickness taken during Refuel 13.*

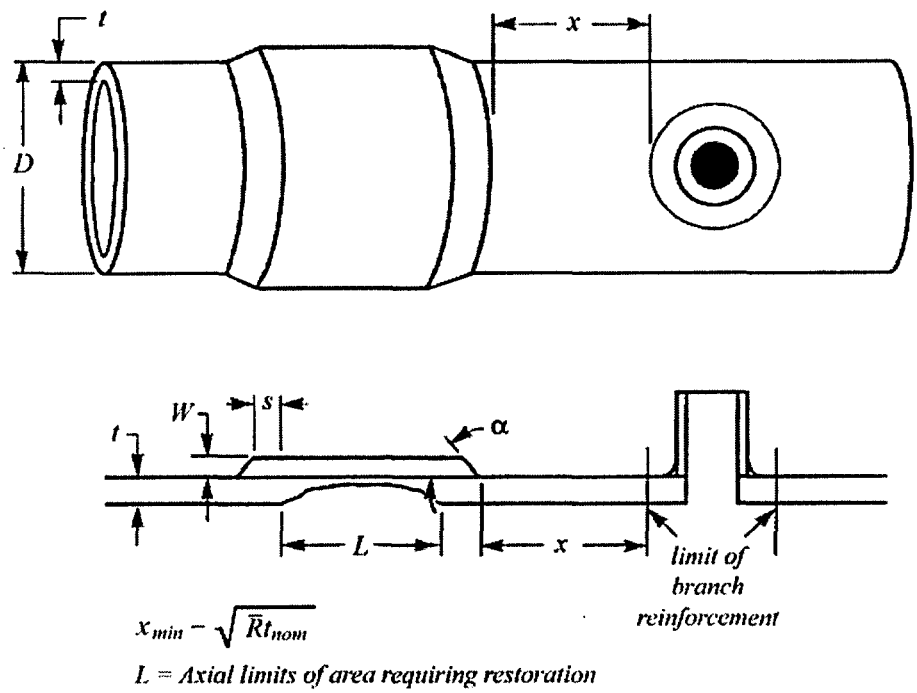

Figure 1: Schematic of Overlay Configuration and Branch Reinforcement.

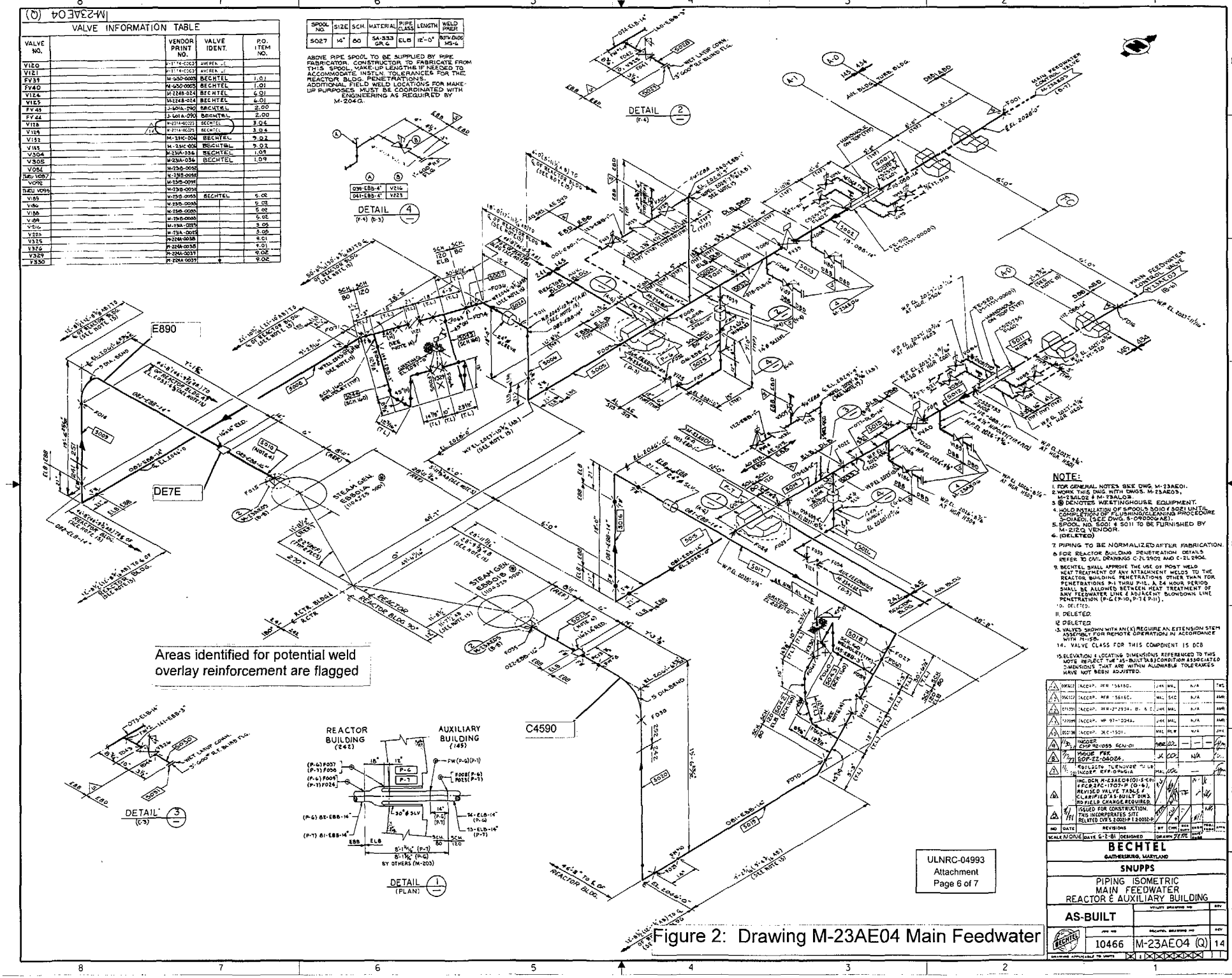

Figure 2: Drawing M-23AE04 Main Feedwater

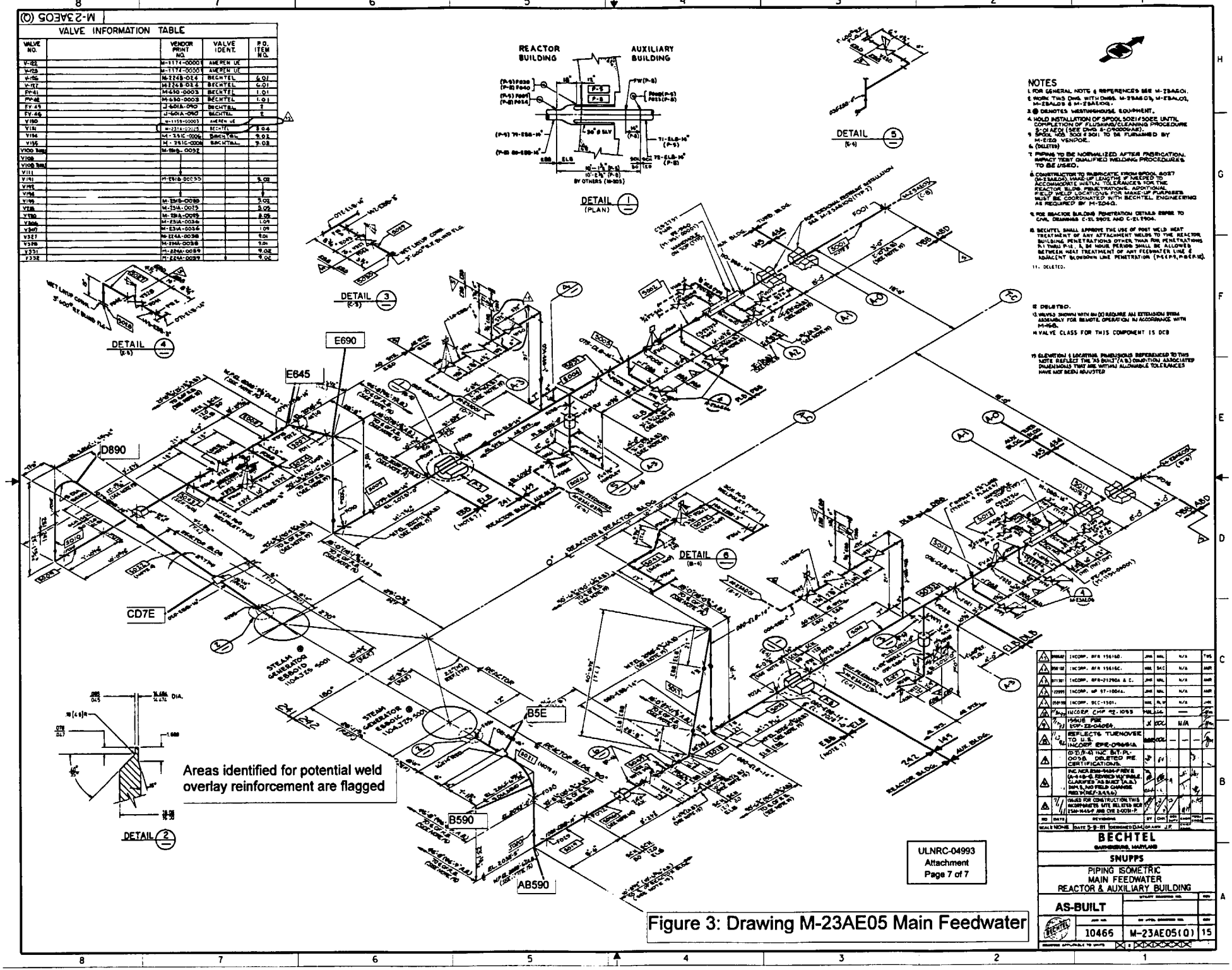

ULNRC-04993
Attachment
Page 7 of 7

Figure 3: Drawing M-23AE05 Main Feedwater