VIRGINIA ELECTRIC AND POWER COMPANY
RICHMOND, VIRGINIA 23261

May 13, 2004

U.S. Nuclear Regulatory Commission
Attention: Document Control Desk
Washington, D.C. 20555

Serial No.	04-280
SPS-LIC/CGL	R0
Docket Nos.	50-280
	50-281
License Nos.	DPR-32
	DPR-37

VIRGINIA ELECTRIC AND POWER COMPANY
SURRY POWER STATION UNITS 1 AND 2
PROPOSED TECHNICAL SPECIFICATION CHANGE
AUXILIARY FEEDWATER REQUIRED ACTION STATEMENT REVISIONS

Pursuant to 10 CFR 50.90, Virginia Electric and Power Company (Dominion) requests amendments, in the form of changes to the Technical Specifications (TSs) to Facility Operating Licenses Numbers DPR-32 and DPR-37 for Surry Power Station Units 1 and 2, respectively. While maintaining the existing auxiliary feedwater (AFW) operability requirements, the proposed change includes TS 3.6 revisions to clarify the auxiliary feedwater pump required action statement and to add an AFW flowpath required action statement. These revisions achieve consistency between the existing operability requirements and required actions for AFW pump inoperability, as well as address the lack of an allowed outage time and required actions for AFW flowpath inoperability. Included in these revisions is a modification of the end state of the TS 3.6 AFW required actions from hot shutdown to less than 350°F and 450 psig, as well as addition of required actions for loss of AFW capability. These changes appropriately place the plant in a safe condition for the circumstances being addressed. The proposed revisions are consistent with the AFW flow requirements in the Surry accident analyses and calculations. Additional minor changes made for consistency include consolidation of main steam safety valve (MSSV) requirements, a terminology revision related to RCS conditions of 350°F and 450 psig, relocation of an opposite unit requirement, and revision of the AFW cross-connect flowpath terminology. A discussion of the proposed TS changes is provided in Attachment 1. The mark-up and proposed pages are provided in Attachments 2 and 3, respectively.

We have evaluated the proposed TS changes and have determined that they do not involve a significant hazards consideration as defined in 10CFR50.92. The basis for our determination that the changes do not involve a significant hazards consideration is provided in Attachment 1. We have also determined that operation with the proposed changes will not result in any significant increase in the amount of effluents that may be released offsite and no significant increase in individual or cumulative occupational radiation exposure. Therefore, the proposed amendment is eligible for categorical

A001

exclusion as set forth in 10CFR51.22(c)(9). Pursuant to 10CFR51.22(b), no environmental impact statement or environmental assessment is needed in connection with the approval of the proposed changes.

As discussed in Attachment 1, the existing AFW System TS operability requirements and required actions for AFW pump inoperability are inconsistent, and an allowed outage time and required actions for AFW flowpath inoperability do not currently exist. Consequently, to preclude the potential for inconsistent application of the TS 3.6 requirements in the future, Dominion would like to implement the proposed TS change in an expeditious manner. Therefore, we request approval of the proposed AFW System TS change by October 15, 2004. This will ensure that the revised TS are in place prior to restart from the Fall Unit 1 refueling outage.

If you have any further questions or require additional information, please contact Mr. Gary Miller at 804-273-2771.

Very truly yours,

Leslie N. Hartz
Vice President – Nuclear Engineering

Attachments:

- Attachment 1 – Discussion of Change
- Attachment 2 – Marked-up Technical Specifications Pages
- Attachment 3 – Proposed Technical Specifications Pages

Commitments made in this letter: None

cc: U.S. Nuclear Regulatory Commission
Region II
Sam Nunn Atlanta Federal Center
Suite 23T85
61 Forsyth Street, SW
Atlanta, Georgia 30303

Mr. G. J. McCoy
NRC Senior Resident Inspector
Surry Power Station

Commissioner
Bureau of Radiological Health
1500 East Main Street
Suite 240
Richmond, VA 23218

SN: 04-280
Docket Nos.: 50-280
50-281
TSCR – AFW Required Action Statement Revisions

COMMONWEALTH OF VIRGINIA)
)
COUNTY OF HENRICO)

The foregoing document was acknowledged before me, in and for the County and Commonwealth aforesaid, today by Leslie N. Hartz, who is Vice President - Nuclear Engineering, of Virginia Electric and Power Company. She has affirmed before me that she is duly authorized to execute and file the foregoing document in behalf of that Company, and that the statements in the document are true to the best of her knowledge and belief.

Acknowledged before me this 13th day of May, 2004.

My Commission Expires: May 31, 2006.

Vicki L. Hull
Notary Public

(SEAL)

Attachment 1

Discussion of Change

Surry Power Station
Units 1 and 2
Virginia Electric and Power Company
(Dominion)

DISCUSSION OF CHANGE

Introduction

Pursuant to 10 CFR 50.90, Virginia Electric and Power Company (Dominion) requests a change to the Technical Specifications (TSs) for Surry Power Station Units 1 and 2. While maintaining the existing auxiliary feedwater (AFW) operability requirements, the proposed change includes TS 3.6 revisions to clarify the auxiliary feedwater (AFW) pump required action statement and to add an AFW flowpath required action statement. These revisions achieve consistency between the existing operability requirements and required actions for AFW pump inoperability, as well as address the lack of an allowed outage time and required actions for AFW flowpath inoperability. Included in these revisions is a modification of the end state of the TS 3.6 AFW required actions from hot shutdown to less than 350°F and 450 psig, as well as addition of required actions for loss of AFW capability. These changes appropriately place the plant in a safe condition for the circumstances being addressed. The proposed revisions are consistent with the AFW flow requirements in the Surry accident analyses and calculations. Additional minor changes made for consistency include consolidation of main steam safety valve (MSSV) requirements, a terminology revision related to RCS conditions of 350°F and 450 psig, relocation of an opposite unit requirement, and revision of the AFW cross-connect flowpath terminology.

The proposed change has been reviewed with respect to 10CFR50.92, and it has been determined that no significant hazards consideration exists. In addition, it has been determined that the change qualifies for categorical exclusion from an environmental assessment as set forth in 10CFR51.22(c)(9); therefore, no environmental impact statement or environmental assessment is needed in connection with the approval of the proposed change.

Background

The current TS requirements for the AFW pumps are not consistent between Reactor Coolant System (RCS) conditions exceeding 350°F and 450 psig and reactor power exceeding 10%. Specifically, TS 3.6.B.1 requires the two motor driven AFW pumps to be operable prior to RCS conditions of 350°F and 450 psig, and TS 3.6.C requires the steam driven AFW pump to be operable prior to exceeding 10% reactor power. With one AFW pump inoperable, TS 3.6.F requires that at least three AFW pumps be operable within 72 hours, or the unit shall be in hot shutdown within the following 12 hours. TS 3.6.F as currently written implies all three AFW pumps are required to be operable between RCS conditions exceeding 350°F and 450 psig and reactor power exceeding 10%. Thus, the AFW pump operability requirements and the associated required action statement are inconsistent. Furthermore, the AFW pump required action statement as currently written does not consider that the AFW System heat removal requirements are a function of power level and core decay heat.

In addition, the current TS 3.6.D requires AFW piping, valves, and control board indication operability. However, there is no associated allowed outage time or required action statement for inoperability of these components or instrumentation.

Design Basis

The AFW System provides a source of feedwater to the secondary side of the steam generators at times when the Feedwater System is not available, thereby maintaining the heat sink capabilities of the steam generators. The system is relied upon to prevent core damage and RCS overpressurization in the event of transients, such as a loss of normal feedwater or a secondary system pipe rupture, and to provide a means for plant cooldown following any plant transient.

The AFW System for each unit consists of two motor driven AFW pumps each rated for 350 gallons per minute (gpm) at 2730 feet of head, one steam driven AFW pump rated for 700 gpm at 2730 feet of head, a 110,000 gallon emergency condensate storage tank, and associated piping, headers, valves, controls, and instrumentation. A flow diagram is included to illustrate the AFW System configuration. Use of two motor driven AFW pumps and a steam driven AFW pump provides for diversity of power sources for the automatic actuation of the AFW supply. The AFW pumps, powered by either power source (i.e., motor driven or steam driven), provide adequate capacity to cool the reactor coolant system (RCS) when required. The amount of AFW flow that is required is dependent upon the amount of decay heat being generated, the rate of cooldown desired for the RCS, and the heat being added to the RCS by operating reactor coolant pumps. Although the flowpaths from the pumps to the steam generators include common piping, the configuration of the system provides two redundant flowpaths. The components in one flowpath are supplied by the H emergency bus, while the other is supplied by the J emergency bus. The AFW Systems for Units 1 and 2 are cross-connected to provide additional redundancy in case a single event, such as a fire or a high energy line break in the main steam valve house, would disable the AFW System on one unit.

Following a reactor trip (with the Feedwater System not available), heat removal from the RCS is accomplished by maintaining the heat sink on the secondary side of the steam generators with the AFW System and releasing steam either to the condensers through the steam dump valves or to the atmosphere through a combination of the steam generator safety valves and available atmospheric steam dump valves. The AFW System feeds water to the steam generators at a rate that both maintains adequate heat transfer and restores the steam generator levels to the narrow range level where it can be maintained and controlled. The AFW System must be capable of functioning for extended periods to either allow for restoration of normal feedwater flow or to proceed with an orderly cooldown of the unit to RCS conditions where the Residual Heat Removal System can be used for decay heat removal.

The AFW flow and stored water capacity must be sufficient to provide for removal of core decay heat, reactor coolant pump heat, and sensible heat during the plant cooldown. The core decay heat and the RCS sensible heat loads increase as a

function of the operating reactor power level. The design basis accident for the AFW System, which is a loss of normal feedwater with offsite power available (the reactor coolant pumps keep operating), has acceptable results assuming an AFW flow of 500 gpm [Reference: UFSAR Chapter 14.2.11]. This AFW flow can be delivered assuming the most limiting single failure which is the loss of the steam driven AFW pump. With reactor power at 10 % or less, the heat removal requirements are significantly reduced compared to the heat removal requirements for the design basis loss of normal feedwater with offsite power available event. The required AFW flow for decay heat, sensible heat, and RCP pump heat removal following a reactor trip from an initial core power of 10% can be meet with an AFW flow of 137 gpm. This requirement is well within the capacity of one motor driven AFW pump.

Licensing Basis

The original Surry TSs, dated March 17, 1972, included the following requirements with no allowed outage times or action statements:

- Two of three AFW pumps shall be operable prior to the RCS exceeding 350°F and 450 psig. (TS 3.6.B.1)

- System piping and valves required for the operation of the components enumerated in Specification B.1, 2, and 3 shall be operable. (TS 3.6.B.4)

As a result of the Three Mile Island Unit 2 incident in March 1979, the NRC issued a letter on September 25, 1979, to advise the company of NRC requirements for the AFW System at Surry Power Station. This NRC letter included NRC Short-Term Recommendation GS-1, which stated: "The licensee should propose modifications to the Technical Specifications to limit the time that one AFW System pump and its associated flow train and essential instrumentation can be inoperable. The outage time limit and subsequent action time should be as required by the Standard Technical Specifications, i.e., 72 hours and 12 hours, respectively." In response to this NRC request, proposed Surry TS Change No. 81 was submitted to the NRC by letter Serial No. 1178, dated December 28, 1979. The proposed TS change was approved by the NRC on April 27, 1982 by TS Amendments 77 and 78 for Units 1 and 2, respectively, and included the following requirements:

- Two motor driven AFW pumps shall be operable and one of three auxiliary feedwater pumps for the opposite unit shall be operable. (Technical Specification 3.6.B.1) [Required to be operable prior to the commencement of any unit operation that would establish reactor coolant system conditions of 350°F and 450 psig which would preclude operation of the Residual Heat Removal System. (Technical Specification 3.6.B)]

- Prior to reactor power exceeding 10%, the steam driven AFW pump shall be operable. (Technical Specification 3.6.C)

- System piping, valves, and control board indication required for the operation of the components enumerated in Specification B.1, 2, 3, and C shall be operable. (TS 3.6.D)

- With one AFW pump inoperable, restore at least three AFW pumps (two motor driven feedwater pumps and one steam driven feedwater pump) to operable status within 72 hours or be in hot shutdown within the following 12 hours. (TS 3.6.F)

As noted above, a distinction was made between the operability requirements for the motor driven and the steam driven AFW pumps. This distinction was based on having the plant at a sufficient power level to prohibit undesirable RCS cooldown, caused by steam flow to the turbine of the steam driven pump. This distinction was unique to Surry's custom TS and was not part of the Standard Technical Specifications. However, the required action statement for the three AFW pumps was written as stated in the Standard Technical Specifications, as recommended by the NRC.

Thus, TS Amendments 77 and 78 introduced the inconsistency between the TSs 3.6.B.1 and 3.6.C operability (and design) requirements and the TS 3.6.F required action statement for the motor driven and the steam driven AFW pumps. The TS 3.6.F required action statement implies that, at any time one AFW pump is inoperable, all three AFW pumps must be restored to operable status within 72 hours, or the unit must be placed in hot shutdown within the following 12 hours. This required action statement is not consistent with the operability requirements of TSs 3.6.B.1 and 3.6.C. TS 3.6.B.1 requires the two motor driven AFW pumps to be operable prior to the RCS exceeding 350°F and 450 psig, but the steam driven AFW pump is not required to be operable until prior to reactor power exceeding 10% in accordance with TS 3.6.C. Therefore, from the time RCS conditions exceed 350°F and 450 psig until reactor power exceeds 10%, only two motor driven AFW pumps are required to be operable, and the current TS 3.6.F requirement to restore three pumps to operable status is more restrictive than, and not consistent with, TSs 3.6.B.1 and 3.6.C. Furthermore, TS 3.6.F as currently written does not take into consideration the fact that the heat removal requirements are a function of the reactor power level. At lower power levels, less AFW flow is required for heat removal. As noted earlier, the AFW flow for the required heat removal after a reactor trip with the reactor initially at 10% power is well within the capacity of one motor driven AFW pump.

In addition, TS Amendments 77 and 78 did not include an allowed outage time and a required action statement corresponding to the AFW piping, valves, and control board indication operability requirement.

Discussion and Description of Proposed TS Revisions

Discussion of Specific TS Revisions

The requirements for the MSSVs in TSs 3.6.A, 3.6.B.3, and 3.6.D are consolidated in TS 3.6.A. This consolidation is accomplished by deleting the duplicate MSSV

requirements in TS 3.6.B.3 and relocating the associated system piping requirement related to the MSSVs in TS 3.6.D (by reference to 3.6.B) to TS 3.6.A.

The terminology in TS 3.6.B with respect to RCS conditions of 350°F and 450 psig is revised for consistency with other TS 3.6 requirements.

The TS 3.6.D requirement that 'automatic initiation instrumentation associated with the opposite unit's auxiliary feedwater pumps need not be operable' is relocated to TS 3.6.G with other opposite unit's auxiliary feedwater requirements.

The proposed change revises the TS 3.6.D piping, valves, and control board indication requirements to more appropriately reflect AFW flowpath requirements, where the flowpath includes piping, headers, valves, and control board indication. TS 3.6.I is added to provide an allowed outage time and required actions associated with the flowpath operability requirements in the revised TS 3.6.D. Minor changes in the TS 3.6.G AFW cross-connect flowpath terminology are made for consistency with the TS 3.6.D flowpath terminology revisions.

The proposed TS change also revises TS 3.6.F to clarify the AFW pump required actions and provides separate required action statements to address the following conditions:

- One motor driven AFW pump and both motor driven AFW pumps inoperable with reactor power less than or equal to 10%.
- One, two, and three AFW pumps inoperable with reactor power greater than 10%.

The proposed TSs 3.6.F and 3.6.I required actions for these conditions are consistent with the Surry accident analyses and calculations. The required actions are structured to allow restoration of operability of inoperable equipment within 72 hours where 100% flow capability exists on the affected unit (Specifications 3.6.F.1.a (by one motor driven AFW pump), 3.6.F.2.a (by two motor driven AFW pumps or the steam driven AFW pump), and 3.6.I.1 (by one AFW flowpath)). When the ability to deliver 100% flow may be compromised, the required action is to put the affected unit in a condition where AFW is not required (less than 350°F and 450 psig) within a reasonable time frame (Specification 3.6.F.2.b). In the unlikely event of loss of AFW capability on the affected unit (i.e., with all required AFW pumps inoperable or with both redundant flowpaths having an inoperable component or instrumentation), the required action is to immediately initiate action to restore operability of one inoperable pump or of the inoperable component or instrumentation in one flowpath (Specifications 3.6.F1.b, 3.6.F.2.c, and 3.6.I.2). With such a loss of AFW capability, the unit is in a seriously degraded condition. In this condition, the unit should not be perturbed by any action, including a power change, which could result in a plant transient or trip. The seriousness of this condition requires that action be taken immediately to restore operability, where immediately means the required action should be pursued without delay and in a controlled manner. Under these circumstances, Specification 3.0.1 and all other required actions directing mode changes are suspended until one inoperable pump or the inoperable component or instrumentation in one flowpath is restored to

operable status, because taking those actions could place the unit in a less safe condition.

The revised required actions in TSs 3.6.F and 3.6.I apply to the affected unit. AFW cross-connect pump and flowpath required actions are contained in TS 3.6.G. The AFW cross-connect requirements were incorporated into the Surry TSs by Amendment 143/140, dated August 2, 1990. The basis for these requirements is not being revised by this change [Reference: UFSAR Appendix 14B].

For the AFW required actions in TS 3.6, the end state of hot shutdown is revised to more appropriately reflect less than 350°F and 450 psig, since this is the plant condition where the AFW System is no longer required to be operable (i.e., corresponds to the applicability requirements for AFW). Thus, the end state of less than 350°F and 450 psig is a safer plant condition than hot shutdown with respect to AFW System inoperability.

Revisions to the Basis for TS 3.6 are made to describe the AFW System configuration and to discuss the design basis and accident analysis requirements supporting the proposed TS change. The Basis revisions are provided for information only and will be incorporated into the TSs, following NRC approval of this TS change request.

In addition, the References for TS 3.6 to the UFSAR are revised to reflect the UFSAR (versus FSAR) section titles and to include references to the following for completeness:

- Section 14.2.11 – Loss of Normal Feedwater
- Appendix 14B – Effects of Piping System Breaks Outside Containment

Details of the specific revisions are provided in the following paragraphs.

<u>Minor Revisions</u>

TS 3.6.A currently states:

> *A. A unit's Reactor Coolant System temperature or pressure shall not exceed 350°F or 450 psig, respectively, or the reactor shall not be critical unless the five main steam line code safety valves associated with each steam generator in unisolated reactor coolant loops are OPERABLE with lift settings as specified in Table 3.6-1A and 3.6-1B.*

TS 3.6.A is revised as follows (NOTE: Consolidates MSSV requirements from TSs 3.6.A, 3.6.B.3, and 3.6.D):

> A. A unit's Reactor Coolant System temperature or pressure shall not exceed 350°F or 450 psig, respectively, or the reactor shall not be critical unless the five main steam line code safety valves associated with each steam generator in unisolated reactor coolant loops are OPERABLE with lift settings as specified in Table 3.6-1A and 3.6-1B. Associated system piping shall also be OPERABLE.

TS 3.6.B currently states:

B. To assure residual heat removal capabilities, the following conditions shall be met prior to the commencement of any unit operation that would establish reactor coolant system conditions of 350°F and 450 psig which would preclude operation of the Residual Heat Removal System.

TS 3.6.B is revised as follows:

B. To assure residual heat removal capabilities, the following conditions shall be met prior to exceeding reactor coolant system conditions of 350°F and 450 psig which would preclude operation of the Residual Heat Removal System.

TS 3.6.B.3 currently states:

3. All main steam line code safety valves, associated with steam generators in unisolated reactor coolant loops, shall be OPERABLE with lift settings as specified in Table 3.6-1A and 3.6-1B.

TS 3.6.B.3 is revised as follows (NOTE: Duplicate requirements are in TS 3.6.A):

3. Deleted.

The following sentence is relocated from TS 3.6.D to TS 3.6.G:

Automatic initiation instrumentation associated with the opposite unit's auxiliary feedwater pumps need not be OPERABLE.

<u>Specific TS Revisions Related to AFW Flowpath Requirements and Actions</u>

TS 3.6.D currently states:

D. System piping, valves, and control board indication required for operation of the components enumerated in Specifications 3.6.B and 3.6.C shall be OPERABLE (automatic initiation instrumentation associated with the opposite unit's auxiliary feedwater pumps need not be OPERABLE).

TS 3.6.D is revised as follows:

D. Two redundant flowpaths, including system piping, headers, valves, and control board indication, required for operation of components enumerated in Specifications 3.6.B and 3.6.C shall be OPERABLE.

TS 3.6.G currently states:

G. The requirements of Specifications 3.6.B and 3.6.C above concerning the opposite unit's auxiliary feedwater pumps; associated piping, valves, and control board indication; and the protected condensate storage tank may be modified to allow the following components to be inoperable, provided immediate attention is directed to making repairs.

TS 3.6.G is revised as follows:

G. The requirements of Specifications 3.6.B and 3.6.C above concerning the opposite unit's auxiliary feedwater pumps; associated redundant flowpaths, including piping, headers, valves, and control board indication; and the protected condensate storage tank may be modified to allow the following components to be inoperable, provided immediate attention is directed to making repairs. Automatic initiation instrumentation associated with the opposite unit's auxiliary feedwater pumps need not be OPERABLE.

TS 3.6.G.1 currently states:

1. One train of the opposite unit's piping, valves, and control board indications or two of the opposite unit's auxiliary feedwater pumps may be inoperable for a period not to exceed 14 days.

TS 3.6.G.1 is revised as follows:

1. One of the opposite unit's flowpaths or two of the opposite unit's auxiliary feedwater pumps may be inoperable for a period not to exceed 14 days.

TS 3.6.G.2 currently states:

2. Both trains of the opposite unit's piping, valves, and control board indications; the opposite unit's protected condensate storage tank; the cross-connect piping from the opposite unit; or three of the opposite unit's auxiliary feedwater pumps may be inoperable for a period not to exceed 72 hours.

TS 3.6.G.2 is revised as follows:

2. Both of the opposite unit's flowpaths; the opposite unit's protected condensate storage tank; the cross-connect piping from the opposite unit; or three of the opposite unit's auxiliary feedwater pumps may be inoperable for a period not to exceed 72 hours.

The end state in TS 3.6.G states:

If the above requirements are not met, be in at least HOT SHUTDOWN within the next 6 hours and in COLD SHUTDOWN within the next 30 hours.

The end state in TS 3.6.G is revised as follows:

If the above requirements are not met, be in HOT SHUTDOWN within the following 6 hours and be less than 350°F and 450 psig in the next 12 hours.

TS 3.6.I is added as follows:

I. The following actions shall be taken with inoperability of a component or instrumentation other than the flow instrumentation in one or both redundant auxiliary feedwater flowpaths required by Specification 3.6.D on the affected unit: (See Specification 3.7 and TS Table 3.7-6 for auxiliary feedwater flow instrumentation requirements.)
   1. With component or instrumentation inoperability in one redundant flowpath, restore the inoperable component or instrumentation to OPERABLE status within 72 hours or be in HOT SHUTDOWN within the following 6 hours and be less than 350°F and 450 psig within the next 12 hours.
   2. With component or instrumentation inoperability affecting both redundant flowpaths, immediately initiate action to restore the inoperable component or instrumentation in one flowpath to OPERABLE status. Specification 3.0.1 and all other required actions directing mode changes are suspended until the inoperable component or instrumentation in one flowpath is restored to OPERABLE status.

<u>Specific TS Revisions Related to AFW Pump Actions</u>

TS 3.6.F currently states:

F. With one auxiliary feedwater pump inoperable, restore at least three auxiliary feedwater pumps (two motor driven feedwater pumps and one steam driven feedwater pump) to OPERABLE status within 72 hours or be in HOT SHUTDOWN within the following 12 hours.

TS 3.6.F is revised as follows:

F. The following actions shall be taken when one or more auxiliary feedwater pumps are inoperable on the affected unit:
   1. With reactor power less than or equal to 10%:
      a. With one motor driven auxiliary feedwater pump inoperable, restore the pump to OPERABLE status within 72 hours or be less than 350°F and 450 psig within the following 12 hours.

b. With both motor driven auxiliary feedwater pumps inoperable, immediately initiate action to restore one inoperable pump to OPERABLE status. Specification 3.0.1 and all other required actions directing mode changes are suspended until one inoperable pump is restored to OPERABLE status.

2. When reactor power is greater than 10%:
   a. With one auxiliary feedwater pump inoperable, restore the pump to OPERABLE status within 72 hours or be in HOT SHUTDOWN within the following 6 hours and be less than 350°F and 450 psig within the next 12 hours.
   b. With two auxiliary feedwater pumps inoperable, be in HOT SHUTDOWN within 6 hours and be less than 350°F and 450 psig within the following 12 hours.
   c. With three auxiliary feedwater pumps inoperable, immediately initiate action to restore one inoperable pump to OPERABLE status. Specification 3.0.1 and all other required actions directing mode changes are suspended until one pump is restored to OPERABLE status.

Specific TS 3.6 Basis Revisions

The following paragraph is added in the Basis for TS 3.6:

The Auxiliary Feedwater System provides a source of feedwater to the secondary side of the steam generators at times when the Feedwater System is not available, thereby maintaining heat sink capabilities of the steam generators. The Auxiliary Feedwater System provides heat removal until normal feedwater flow is restored or until an orderly cooldown to Reactor Coolant System conditions where the Residual Heat Removal System can be placed in service. The Auxiliary Feedwater System for each unit consists of two motor driven pumps, one steam driven pump, a 110,000 gallon emergency condensate storage tank, and associated common piping, redundant headers, valves, controls, and instrumentation. Although the flowpaths from the pumps to the steam generators include common piping, the configuration of the system provides two redundant flowpaths. The components in one flowpath are supplied by the H emergency bus, while the other is supplied by the J emergency bus. The auxiliary feedwater design basis accident is a loss of normal feedwater with offsite power available (the reactor coolant pumps running). The auxiliary feedwater flow required to remove the heat and cool the unit to residual heat removal conditions for this design basis case can be provided by the two motor driven pumps or by the steam driven pump. With reactor power at 10% or less, the heat removal requirements are significantly reduced compared to the design basis requirements. The required auxiliary feedwater flow for heat removal following a reactor trip from a reactor power level of 10% or less is well within the capacity of one motor driven pump. The Specification 3.6 requirements are consistent with the Surry accident analyses and calculations. The required actions are structured to allow restoration of operability of inoperable equipment within 72 hours where 100% flow capability exists on the affected unit (Specifications 3.6.F.1.a, 3.6.F.2.a, and

3.6.I.1). When the ability to deliver 100% flow may be compromised, the required action is to put the affected unit in a condition where auxiliary feedwater is not required (less than 350°F and 450 psig) within a reasonable time frame (Specification 3.6.F.2.b). In the unlikely event of loss of auxiliary feedwater capability on the affected unit (i.e., with all required AFW pumps inoperable or with both redundant flowpaths having an inoperable component or instrumentation), the required action is to immediately initiate action to restore operability of one inoperable pump or of the inoperable component or instrumentation in one flowpath (Specifications 3.6.F1.b, 3.6.F.2.c, and 3.6.I.2). With such a loss of auxiliary feedwater capability, the unit is in a seriously degraded condition. In this condition, the unit should not be perturbed by any action, including a power change, which could result in a plant transient or trip. The seriousness of this condition requires that action be taken immediately to restore operability, where immediately means the required action should be pursued without delay and in a controlled manner. Under these circumstances, Specification 3.0.1 and all other required actions directing mode changes are suspended until one inoperable pump or the inoperable component or instrumentation in one flowpath is restored to operable status, because taking those actions could place the unit in a less safe condition.

Safety Implications of the Proposed Change

While maintaining the existing AFW operability requirements, the proposed change includes TS 3.6 revisions to clarify the AFW pump required action statement and to add an AFW flowpath required action statement. These revisions achieve consistency between the existing operability requirements and required actions for AFW pump inoperability, as well as address the lack of an allowed outage time and required actions for AFW flowpath inoperability. Included in these revisions is a modification of the end state of the TS 3.6 AFW required actions from hot shutdown to less than 350°F and 450 psig, as well as addition of actions for loss of AFW capability. These changes appropriately place the plant in a safe condition for the circumstances being addressed. Additional minor changes made for consistency include consolidation of MSSV requirements, a terminology revision related to RCS conditions of 350°F and 450 psig, relocation of an opposite unit requirement, and revision of the AFW cross-connect flowpath terminology.

The proposed change does not involve any plant modifications and does not revise the design of the plant or the AFW System. The TS revisions reflect the required AFW flow for heat removal as a function of the operating reactor power level. Operation of the AFW System with the revised action statements continues to satisfy the applicable design basis criteria and is consistent with the Surry accident analyses and calculations. Thus, this proposed TS change has no adverse impact on safety, and the AFW System will continue to perform its required safety function.

No Significant Hazards Consideration

The requirements of 10CFR50.92 have been reviewed as they relate to the proposed Technical Specifications change to Section 3.6 for Surry Units 1 and 2. While maintaining the existing auxiliary feedwater (AFW) operability requirements, the proposed Technical Specifications change revises the action statement for the motor driven and the steam driven AFW pumps to be consistent with the operability requirements, as well as the design requirements for these pumps. The proposed change also adds an AFW flowpath required action statement. These pumps and flowpaths are part of the AFW System, which provides a source of feedwater to the secondary side of the steam generators at times when the Feedwater System is not available, thereby maintaining the heat sink capabilities of the steam generator. The system is relied upon to prevent core damage and system overpressurization in the event of transients, such as a loss of normal feedwater or a secondary system pipe rupture, and to provide a means for plant cooldown. Additional minor changes made for consistency include consolidation of main steam safety valve requirements, a terminology revision related to RCS conditions of 350°F and 450 psig, relocation of an opposite unit requirement, and revision of the AFW cross-connect flowpath terminology. The proposed Technical Specifications change does not involve a significant hazards consideration because operation of Surry Units 1 and 2 in accordance with this change would not:

1. Involve a significant increase in the probability or consequences of an accident previously evaluated.

   The proposed revision to the AFW pump required action statement and addition of an AFW flowpath required action statement would not significantly increase the probability of accidents previously evaluated since the AFW System is not required to operate until after the occurrence of the previously evaluated accidents. The change does not impact any of the initiators of the accidents. The proposed change does not involve a significant increase in the consequences of an accident previously evaluated because the AFW system will continue to perform its intended safety function for these accidents. The change provides different required actions to be taken for one, two, or three inoperable AFW pumps based on reactor power level and required AFW flow, as well as required actions to be taken for flowpath inoperability. The operation of the AFW System with the revised required action statements continues to meet the applicable design criteria.

2. Create the possibility of a new or different kind of accident from any accident previously identified.

   The safety function of the AFW System continues to be the same and is met using the same equipment. The change does not involve any plant modifications and does not revise the design of the plant or the AFW System. Operation of the AFW System with the revised required action statements continues to meet the applicable design criteria and is consistent with the Surry accident analyses and calculations. Therefore, the proposed change does not introduce any new failures that could

create the possibility of a new or different kind of accident from any accident previously identified.

3. Involve a significant reduction in a margin of safety.

   The revised required action statements for the AFW pumps and flowpaths continue to assure that the margins of safety assumed in the accidents and transients that rely upon operation of the AFW System are maintained. The proposed required action statements appropriately place the plant in a safe condition for the circumstances being addressed. Therefore, this proposed revision does not affect the margin of safety.

Environmental Assessment

This amendment request meets the eligibility criteria for categorical exclusion set forth in 10 CFR 51.22(c)(9) as follows:

(i) The amendment involves no significant hazards consideration.

As described above, the proposed change to TS 3.6 requirements does not involve a significant hazards consideration.

(ii) There is no significant change in the types or significant increase in the amounts of any effluents that may be released offsite.

The proposed TS change does not involve the installation of any new equipment or the modification of any equipment that may affect the types or amounts of effluents that may be released offsite. Operation of the AFW System with the revised required actions continues to satisfy the applicable design criteria and accident analyses. Therefore, there is no significant change in the types or significant increase in the amounts of any effluents that may be released offsite.

(iii) There is no significant increase in individual or cumulative occupational radiation exposure.

The proposed TS change does not involve plant physical changes that affect radiation exposure. Operation of the AFW System with the revised required actions continues to satisfy the applicable design criteria and accident analyses. Therefore, there is no significant increase in individual or cumulative occupational radiation exposure.

Based on the above assessment, Dominion concludes that the proposed change meets the criteria specified in 10 CFR 51.22 for a categorical exclusion from the requirements of 10 CFR 51.22 relative to requiring a specific environmental assessment or impact statement by the Commission.

Conclusion

While maintaining the existing AFW operability requirements, the proposed change includes TS 3.6 revisions to achieve consistency between the existing operability requirements and required actions for AFW pump inoperability, as well as addresses the lack of an allowed outage time and required actions for AFW flowpath inoperability. Included in these revisions is a modification of the end state of the TS 3.6 AFW required actions from hot shutdown to less than 350°F and 450 psig, as well as addition of actions for loss of AFW capability. These changes appropriately place the plant in a safe condition for the circumstances being addressed. The proposed revisions are consistent with the flow requirements in the Surry accident analyses and calculations. Additional minor changes made for consistency include consolidation of MSSV requirements, a terminology revision related to RCS conditions of 350°F and 450 psig, relocation of an opposite unit requirement, and revision of the AFW cross-connect flowpath terminology. The Station Nuclear Safety and Operating Committee (SNSOC) and the Management Safety Review Committee (MSRC) have reviewed the proposed change and have concluded that this change does not involve a significant hazards consideration and will not endanger the health and safety of the public.

References

1. NRC Letter to Virginia Electric and Power Company, September 25, 1979 – NRC Requirements for Auxiliary Feedwater Systems at Surry Power Station, Units 1 and 2

2. Virginia Electric and Power Company Letter to NRC, November 9, 1979, Serial No. 811/092579 - Surry Power Station Units 1 and 2 - Auxiliary Feedwater System Requirements

3. Virginia Electric and Power Company Letter to the NRC, December 28, 1979, Serial No. 1178 - Amendment of Operating Licenses - Surry Power Station Unit Nos. 1 and 2 - Proposed Technical Specification Change No. 81

4. NRC Letter to Virginia Electric and Power Company, April 27, 1982 - Issuance of Amendment 77 to Facility Operating License DPR-32 and Amendment 78 to Facility Operating License DPR-37 for Surry Power Station Units 1 and 2 – Revision of Technical Specifications Related to the Auxiliary Feedwater System

AUXILIARY FEEDWATER FLOW DIAGRAM

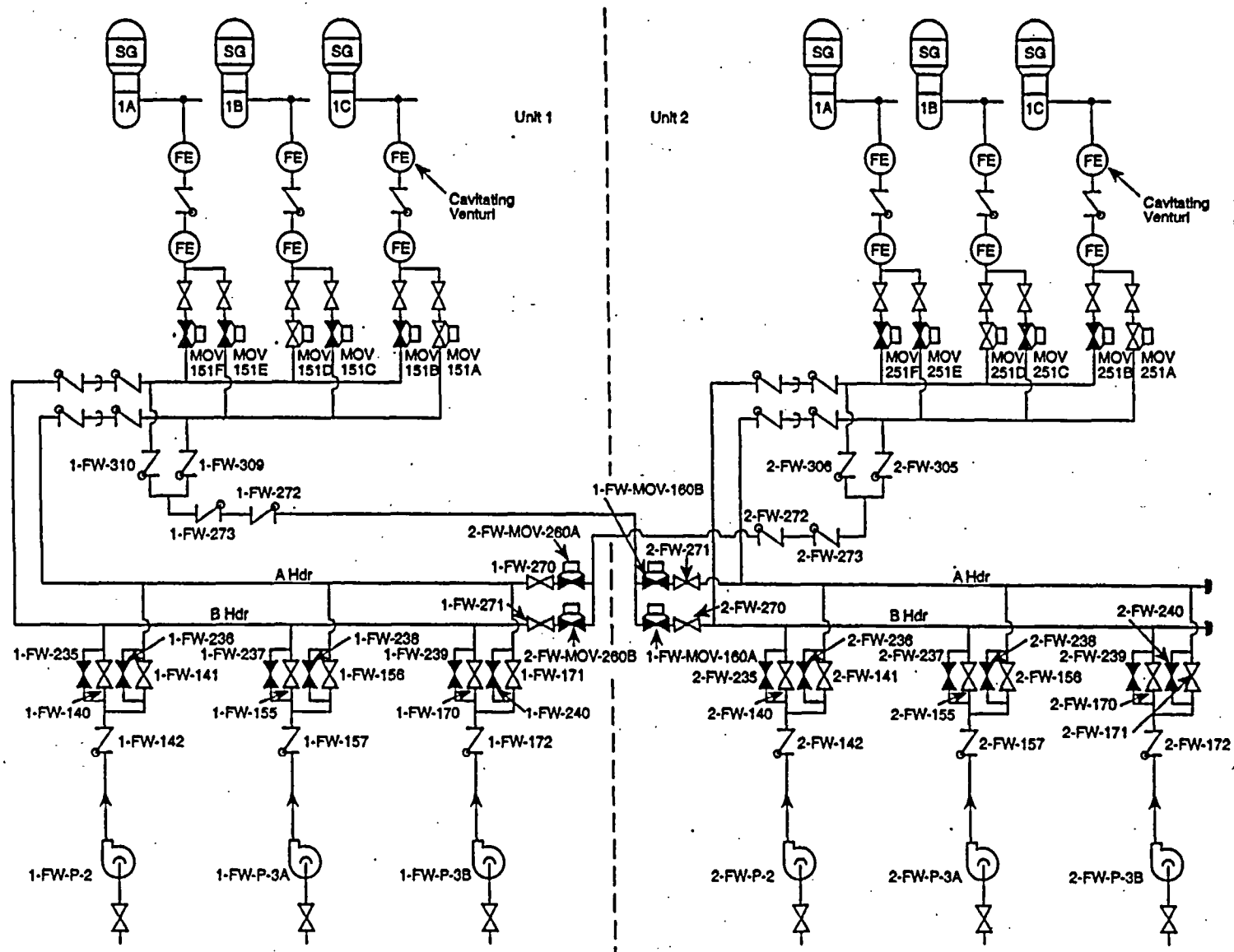

Graphics No LD1922A

Attachment 2

Marked-up Technical Specifications Pages

Surry Power Station
Units 1 and 2
Virginia Electric and Power Company
(Dominion)

3.6 TURBINE CYCLE

Applicability

Applies to the operating status of the Main Steam and Auxiliary Feed Systems.

Objectives

To define the conditions required in the Main Steam System and Auxiliary Feed System for protection of the steam generator and to assure the capability to remove residual heat from the core during a loss of station power/or accident situations.

Specification

A. A unit's Reactor Coolant System temperature or pressure shall not exceed 350°F or 450 psig, respectively, or the reactor shall not be critical unless the five main steam line code safety valves associated with each steam generator in unisolated reactor coolant loops are OPERABLE with lift settings as specified in Table 3.6-1A and 3.6-1B. Associated system piping shall also be OPERABLE.

B. To assure ~~residual~~ heat removal capabilities, the following conditions shall be met prior to exceeding ~~the commencement of any unit operation that would establish~~ reactor coolant system conditions of 350°F and 450 psig which would preclude operation of the Residual Heat Removal System. The following shall apply:

1. Two motor driven auxiliary feedwater pumps shall be OPERABLE.

2. A minimum of 96,000 gallons of water shall be available in the protected condensate storage tank to supply emergency water to the auxiliary feedwater pump suctions.

3. Deleted. ~~All main steam line code safety valves, associated with steam generators in unisolated reactor coolant loops, shall be OPERABLE with lift settings as specified in Table 3.6-1A and 3.6-1B.~~

7. One of the two physically independent circuits from the offsite transmission network energizing the opposite unit's emergency buses.

C. Prior to reactor power exceeding 10%, the steam driven auxiliary feedwater pump shall be OPERABLE.

D. Two redundant flowpaths, including System piping, headers, valves, and control board indication, required for operation of the components ~~enumerated~~ in Specifications 3.6.B and 3.6.C shall be OPERABLE. ~~{~~Automatic initiation instrumentation associated with the opposite unit's auxiliary feedwater pumps need not be OPERABLE~~}~~.

E. The specific activity of the secondary coolant system shall be ≤ 0.10 μCi/cc DOSE EQUIVALENT I-131. If the specific activity of the secondary coolant system exceeds 0.10 μCi/cc DOSE EQUIVALENT I-131, the reactor shall be shut down and cooled to 500°F or less within 6 hours after detection and in COLD SHUTDOWN within the following 30 hours.

Insert A

~~F. With one auxiliary feedwater pump inoperable, restore at least three auxiliary feedwater pumps (two motor driven feedwater pumps and one steam driven feedwater pump) to OPERABLE status within 72 hours or be in HOT SHUTDOWN within the following 12 hours.~~

G. The requirements of Specifications 3.6.B and 3.6.D above concerning the opposite unit's auxiliary feedwater pumps; associated redundant flowpaths, including piping, valves, headers, and control board indication; and the protected condensate storage tank may ~~be modified~~ to allow the following components to be inoperable, provided immediate attention is directed to making repairs.

1. One ~~train~~ of the opposite unit's flowpaths ~~piping, valves, and control board indications~~ or two of the opposite unit's auxiliary feedwater pumps may be inoperable for a period not to exceed 14 days.

INSERT A – Revised TS 3.6.F

F. The following actions shall be taken when one or more auxiliary feedwater pumps are inoperable on the affected unit:
   1. With reactor power less than or equal to 10%:
      a. With one motor driven auxiliary feedwater pump inoperable, restore the pump to OPERABLE status within 72 hours or be less than 350°F and 450 psig within the following 12 hours.
      b. With both motor driven auxiliary feedwater pumps inoperable, immediately initiate action to restore one inoperable pump to OPERABLE status. Specification 3.0.1 and all other required actions directing mode changes are suspended until one inoperable pump is restored to OPERABLE status.
   2. When reactor power is greater than 10%:
      a. With one auxiliary feedwater pump inoperable, restore the pump to OPERABLE status within 72 hours or be in HOT SHUTDOWN within the following 6 hours and be less than 350°F and 450 psig within the next 12 hours.
      b. With two auxiliary feedwater pumps inoperable, be in HOT SHUTDOWN within 6 hours and be less than 350°F and 450 psig within the following 12 hours.
      c. With three auxiliary feedwater pumps inoperable, immediately initiate action to restore one inoperable pump to OPERABLE status. Specification 3.0.1 and all other required actions directing mode changes are suspended until one pump is restored to OPERABLE status.

2. Both ~~trains~~ of the opposite unit's flowpaths ~~piping, valves, and control board indications;~~ the opposite unit's protected condensate storage tank; the cross-connect piping from the opposite unit; or three of the opposite unit's auxiliary feedwater pumps may be inoperable for a period not to exceed 72 hours.

3. A train of the opposite unit's emergency power system as required by Section 3.6.B.4.c above may be inoperable for a period not to exceed 14 days; if this train's inoperability is related to a diesel fuel oil path, one diesel fuel oil path may be "inoperable" for 24 hours provided the other flow path is proven OPERABLE; if after 24 hours, the inoperable flow path cannot be restored to service, the diesel shall be considered "inoperable". During this 14 day period, the following limitations apply:

   a. If the offsite power source becomes unable to energize the opposite unit's OPERABLE train, operation may continue provided its associated emergency diesel generator is energizing the OPERABLE train.

   b. If the opposite unit's OPERABLE train's emergency diesel generator becomes unavailable, operation may continue for 72 hours provided the offsite power source is energizing the opposite unit's OPERABLE train.

   c. Return of the originally inoperable train to OPERABLE status allows the second inoperable train to revert to the 14 day limitation.

If the above requirements are not met, be in ~~at least~~ HOT SHUTDOWN within the following ~~next~~ 6 hours and be less than 350°F and 450 psig in the next 12 hours. ~~in COLD SHUTDOWN within the next 30 hours.~~

H. The requirements of Specification 3.6.B.2 above may be modified to allow utilization of protected condensate storage tank water with the auxiliary steam generator feed pumps provided the water level is maintained above 60,000 gallons, sufficient replenishment water is available in the 300,000 gallon condensate storage tank, and replenishment of the protected condensate storage tank is commenced within two hours after the cessation of protected condensate storage tank water consumption.

I. Insert B

INSERT B – New TS 3.6.I

I. The following actions shall be taken with inoperability of a component or instrumentation other than the flow instrumentation in one or both redundant auxiliary feedwater flowpaths required by Specification 3.6.D on the affected unit: (See Specification 3.7 and TS Table 3.7-6 for auxiliary feedwater flow instrumentation requirements.)
   1. With component or instrumentation inoperability in one redundant flowpath, restore the inoperable component or instrumentation to OPERABLE status within 72 hours or be in HOT SHUTDOWN within the following 6 hours and be less than 350°F and 450 psig within the next 12 hours.
   2. With component or instrumentation inoperability affecting both redundant flowpaths, immediately initiate action to restore the inoperable component or instrumentation in one flowpath to OPERABLE status. Specification 3.0.1 and all other required actions directing mode changes are suspended until the inoperable component or instrumentation in one flowpath is restored to OPERABLE status.

Basis

A reactor which has been shutdown from power requires removal of core residual heat. While reactor coolant temperature or pressure is > 350°F or 450 psig, respectively, residual heat removal requirements are normally satisfied by steam bypass to the condenser. If the condenser is unavailable, steam can be released to the atmosphere through the safety valves or power operated relief valves.

The capability to supply feedwater to the generators is normally provided by the operation of the Condensate and Feedwater Systems. In the event of complete loss of electrical power to the station, residual heat removal would continue to be assured by the availability of either the steam driven auxiliary feedwater pump or one of the motor driven auxiliary feedwater pumps and the 110,000-gallon protected condensate storage tank.

Insert C as a new paragraph

Separate paragraph

In the event of a fire or high energy line break which would render the auxiliary feedwater pumps inoperable on the affected unit, residual heat removal would continue to be assured by the availability of either the steam driven auxiliary feedwater pump or one of the motor-driven auxiliary feedwater pumps from the opposite unit. A minimum of two auxiliary feedwater pumps are required to be operable* on the opposite unit to ensure compliance with the design basis accident analysis assumptions, in that auxiliary feedwater can be delivered via the cross-connect, even if a single active failure results in the loss of one of the two pumps. In addition, the requirement for operability of the opposite unit's emergency power system is to ensure that auxiliary feedwater from the opposite unit can be supplied via the cross-connect in the event of a common-mode failure of all auxiliary feedwater pumps in the affected unit due to a high energy line break in the main steam valve house. Without this requirement, a single failure (such as loss of the shared backup diesel generator) could result in loss of power to the opposite unit's emergency buses in the event of a loss of offsite power, thereby rendering the cross-connect inoperable. The longer allowed outage time for the opposite unit's emergency power system is based on the low probability of a high energy line break in the main steam valve house coincident with a loss of offsite power.

* excluding automatic initiation instrumentation

INSERT C – New paragraph in TS 3.6 Basis

The Auxiliary Feedwater System provides a source of feedwater to the secondary side of the steam generators at times when the Feedwater System is not available, thereby maintaining heat sink capabilities of the steam generators. The Auxiliary Feedwater System provides heat removal until normal feedwater flow is restored or until an orderly cooldown to Reactor Coolant System conditions where the Residual Heat Removal System can be placed in service. The Auxiliary Feedwater System for each unit consists of two motor driven pumps, one steam driven pump, a 110,000 gallon emergency condensate storage tank, and associated common piping, redundant headers, valves, controls, and instrumentation. Although the flowpaths from the pumps to the steam generators include common piping, the configuration of the system provides two redundant flowpaths. The components in one flowpath are supplied by the H emergency bus, while the other is supplied by the J emergency bus. The auxiliary feedwater design basis accident is a loss of normal feedwater with offsite power available (the reactor coolant pumps running). The auxiliary feedwater flow required to remove the heat and cool the unit to residual heat removal conditions for this design basis case can be provided by the two motor driven pumps or by the steam driven pump. With reactor power at 10% or less, the heat removal requirements are significantly reduced compared to the design basis requirements. The required auxiliary feedwater flow for heat removal following a reactor trip from a reactor power level of 10% or less is well within the capacity of one motor driven pump. The Specification 3.6 requirements are consistent with the Surry accident analyses and calculations. The required actions are structured to allow restoration of operability of inoperable equipment within 72 hours where 100% flow capability exists on the affected unit (Specifications 3.6.F.1.a, 3.6.F.2.a, and 3.6.I.1). When the ability to deliver 100% flow may be compromised, the required action is to put the affected unit in a condition where auxiliary feedwater is not required (less than 350°F and 450 psig) within a reasonable time frame (Specification 3.6.F.2.b). In the unlikely event of loss of auxiliary feedwater capability on the affected unit (i.e., with all required AFW pumps inoperable or with both redundant flowpaths having an inoperable component or instrumentation), the required action is to immediately initiate action to restore operability of one inoperable pump or of the inoperable component or instrumentation in one flowpath (Specifications 3.6.F1.b, 3.6.F.2.c, and 3.6.I.2). With such a loss of auxiliary feedwater capability, the unit is in a seriously degraded condition. In this condition, the unit should not be perturbed by any action, including a power change, which could result in a plant transient or trip. The seriousness of this condition requires that action be taken immediately to restore operability, where immediately means the required action should be pursued without delay and in a controlled manner. Under these circumstances, Specification 3.0.1 and all other required actions directing mode changes are suspended until one inoperable pump or the inoperable component or instrumentation in one flowpath is restored to operable status, because taking those actions could place the unit in a less safe condition.

REFERENCES

UFSAR Section 4, Reactor Coolant System

UFSAR Section 9.3, Residual Heat Removal System

UFSAR Section 10.3.1, Main Steam System

UFSAR Section 10.3.2, Auxiliary Steam System

UFSAR Section 10.3.5, Condensate and ~~Auxiliary~~ Feedwater Systems

UFSAR Section 10.3.8, Vent and Drain Systems

~~UFSAR Section 14.3.2.5, Environmental Effects of a Steam Line Break~~

UFSAR Section 14.2.11, Loss of Normal Feedwater

UFSAR Section 14.3.2, Rupture of a Main Steam Pipe

UFSAR Section 14B, Effects of Piping System Breaks Outside Containment

Attachment 3

Proposed Technical Specifications Pages

Surry Power Station
Units 1 and 2
Virginia Electric and Power Company
(Dominion)

TABULATION OF CHANGES

License No. DPR-32 / Docket No. 50-280
License No. DPR-37 / Docket No. 50-281

Summary of Changes:

While maintaining the existing auxiliary feedwater (AFW) operability requirements, the proposed change includes TS 3.6 revisions to clarify the auxiliary feedwater pump required action statement and to add an AFW flowpath required action statement. The proposed change also includes a modification of the end state of the TS 3.6 AFW required actions from hot shutdown to less than 350°F and 450 psig, as well as addition of required actions for loss of AFW capability. Additional minor changes made for consistency include consolidation of main steam safety valve (MSSV) requirements, a terminology revision related to RCS conditions of 350°F and 450 psig, relocation of an opposite unit requirement, and revision of the AFW cross-connect flowpath terminology.

DELETE	DATED	SUBSTITUTE
TS 3.6-1	03-12-01	TS 3.6-1
TS 3.6-3	06-07-99	TS 3.6-3
TS 3.6-4	06-07-99	TS 3.6-4
TS 3.6-5	06-07-99	TS 3.6-5
TS 3.6-5a	06-07-99	TS 3.6-5a
TS 3-6.6	10-12-84	TS 3.6-6

3.6 TURBINE CYCLE

Applicability

Applies to the operating status of the Main Steam and Auxiliary Feed Systems.

Objectives

To define the conditions required in the Main Steam System and Auxiliary Feed System for protection of the steam generator and to assure the capability to remove residual heat from the core during a loss of station power/or accident situations.

Specification

A. A unit's Reactor Coolant System temperature or pressure shall not exceed 350°F or 450 psig, respectively, or the reactor shall not be critical unless the five main steam line code safety valves associated with each steam generator in unisolated reactor coolant loops are OPERABLE with lift settings as specified in Table 3.6-1A and 3.6-1B. Associated system piping shall also be OPERABLE.

B. To assure residual heat removal capabilities, the following conditions shall be met prior to exceeding reactor coolant system conditions of 350°F and 450 psig which would preclude operation of the Residual Heat Removal System. The following shall apply:

1. Two motor driven auxiliary feedwater pumps shall be OPERABLE.

2. A minimum of 96,000 gallons of water shall be available in the protected condensate storage tank to supply emergency water to the auxiliary feedwater pump suctions.

3. Deleted.

7. One of the two physically independent circuits from the offsite transmission network energizing the opposite unit's emergency buses.

C. Prior to reactor power exceeding 10%, the steam driven auxiliary feedwater pump shall be OPERABLE.

D. Two redundant flowpaths, including system piping, headers, valves, and control board indication, required for operation of the components enumerated in Specifications 3.6.B and 3.6.C shall be OPERABLE.

E. The specific activity of the secondary coolant system shall be ≤ 0.10 μCi/cc DOSE EQUIVALENT I-131. If the specific activity of the secondary coolant system exceeds 0.10 μCi/cc DOSE EQUIVALENT I-131, the reactor shall be shut down and cooled to 500°F or less within 6 hours after detection and in COLD SHUTDOWN within the following 30 hours.

F. The following actions shall be taken when one or more auxiliary feedwater pumps are inoperable on the affected unit:

1. With reactor power less than or equal to 10%:

a. With one motor driven auxiliary feedwater pump inoperable, restore the pump to OPERABLE status within 72 hours or be less than 350°F and 450 psig within the following 12 hours.

b. With both motor driven auxiliary feedwater pumps inoperable, immediately initiate action to restore one inoperable pump to OPERABLE status. Specification 3.0.1 and all other required actions directing mode changes are suspended until one inoperable pump is restored to OPERABLE status.

2. With reactor power greater than 10%:

a. With one auxiliary feedwater pump inoperable, restore the pump to OPERABLE status within 72 hours or be in HOT SHUTDOWN within the following 6 hours and be less than 350°F and 450 psig within the next 12 hours.

b. With two auxiliary feedwater pumps inoperable, be in HOT SHUTDOWN within 6 hours and be less than 350°F and 450 psig within the following 12 hours.

c. With three auxiliary feedwater pumps inoperable, immediately initiate action to restore one inoperable pump to OPERABLE status. Specification 3.0.1 and all other required actions directing mode changes are suspended until one inoperable pump is restored to OPERABLE status.

G. The requirements of Specifications 3.6.B and 3.6.D above concerning the opposite unit's auxiliary feedwater pumps; associated redundant flowpaths, including piping, headers, valves, and control board indication; and the protected condensate storage tank may be modified to allow the following components to be inoperable, provided immediate attention is directed to making repairs. Automatic initiation instrumentation associated with the opposite unit's auxiliary feedwater pumps need not be OPERABLE.

1. One of the opposite unit's flowpaths or two of the opposite unit's auxiliary feedwater pumps may be inoperable for a period not to exceed 14 days.

2. Both of the opposite unit's flowpaths; the opposite unit's protected condensate storage tank; the cross-connect piping from the opposite unit; or three of the opposite unit's auxiliary feedwater pumps may be inoperable for a period not to exceed 72 hours.

3. A train of the opposite unit's emergency power system as required by Section 3.6.B.4.c above may be inoperable for a period not to exceed 14 days; if this train's inoperability is related to a diesel fuel oil path, one diesel fuel oil path may be "inoperable" for 24 hours provided the other flow path is proven OPERABLE; if after 24 hours, the inoperable flow path cannot be restored to service, the diesel shall be considered "inoperable". During this 14 day period, the following limitations apply:

   a. If the offsite power source becomes unable to energize the opposite unit's OPERABLE train, operation may continue provided its associated emergency diesel generator is energizing the OPERABLE train.

   b. If the opposite unit's OPERABLE train's emergency diesel generator becomes unavailable, operation may continue for 72 hours provided the offsite power source is energizing the opposite unit's OPERABLE train.

   c. Return of the originally inoperable train to OPERABLE status allows the second inoperable train to revert to the 14 day limitation.

If the above requirements are not met, be in HOT SHUTDOWN within the following 6 hours and be less than 350°F and 450 psig in the next 12 hours.

H. The requirements of Specification 3.6.B.2 above may be modified to allow utilization of protected condensate storage tank water with the auxiliary steam generator feed pumps provided the water level is maintained above 60,000 gallons, sufficient replenishment water is available in the 300,000 gallon condensate storage tank, and replenishment of the protected condensate storage tank is commenced within two hours after the cessation of protected condensate storage tank water consumption.

I. The following actions shall be taken with inoperability of a component or instrumentation other than the flow instrumentation in one or both redundant auxiliary feedwater flowpaths required by Specification 3.6.D on the affected unit: (See Specification 3.7 and TS Table 3.7-6 for auxiliary feedwater flow instrumentation requirements.)

1. With component or instrumentation inoperability in one redundant flowpath, restore the inoperable component or instrumentation to OPERABLE status within 72 hours or be in HOT SHUTDOWN within the following 6 hours and be less than 350°F and 450 psig within the next 12 hours.

2. With component or instrumentation inoperability affecting both redundant flowpaths, immediately initiate action to restore the inoperable component or instrumentation in one flowpath to OPERABLE status. Specification 3.0.1 and all other required actions directing mode changes are suspended until the inoperable component or instrumentation in one flowpath is restored to OPERABLE status.

Basis

A reactor which has been shutdown from power requires removal of core residual heat. While reactor coolant temperature or pressure is > 350°F or 450 psig, respectively, residual heat removal requirements are normally satisfied by steam bypass to the condenser. If the condenser is unavailable, steam can be released to the atmosphere through the safety valves or power operated relief valves. The capability to supply feedwater to the generators is normally provided by the operation of the Condensate and Feedwater Systems.

The Auxiliary Feedwater System provides a source of feedwater to the secondary side of the steam generators at times when the Feedwater System is not available, thereby maintaining heat sink capabilities of the steam generators. The Auxiliary Feedwater System provides heat removal until normal feedwater flow is restored or until an orderly cooldown to Reactor Coolant System conditions where the Residual Heat Removal System can be placed in service. The Auxiliary Feedwater System for each unit consists of two motor driven pumps, one steam driven pump, a 110,000 gallon emergency condensate storage tank, and associated common piping, redundant headers, valves, controls, and instrumentation. Although the flowpaths from the pumps to the steam generators include common piping, the configuration of the system provides two redundant flowpaths. The components in one flowpath are supplied by the H emergency bus, while the other is supplied by the J emergency bus. The auxiliary feedwater design basis accident is a loss of normal feedwater with offsite power available (the reactor coolant pumps running). The auxiliary feedwater flow required to remove the heat and cool the unit to residual heat removal conditions for this design basis case can be provided by the two motor driven pumps or by the steam driven pump. With reactor power at 10% or less, the heat removal requirements are significantly reduced compared to the design basis requirements. The required auxiliary feedwater flow for heat removal following a reactor trip from a reactor power level of 10% or less is well within the capacity of one motor driven pump. The Specification 3.6 requirements are consistent with the Surry accident analyses and calculations. The required actions are structured to allow restoration of operability of inoperable equipment within 72 hours where 100% flow capability exists on the affected unit (Specifications 3.6.F.1.a, 3.6.F.2.a, and 3.6.I.1). When the ability to deliver 100% flow may be compromised, the required action is to put the affected unit in a condition where auxiliary feedwater is not required (less than 350°F and 450 psig) within a reasonable time frame (Specification 3.6.F.2.b). In the unlikely event of loss of auxiliary feedwater capability on the affected unit (i.e., with all required auxiliary feedwater pumps inoperable or with both redundant flowpaths having an inoperable component or instrumentation), the required action is to immediately initiate action to restore operability of one inoperable pump or of the inoperable component or instrumentation in one flowpath (Specifications 3.6.F1.b, 3.6.F.2.c, and 3.6.I.2). With such a loss of auxiliary feedwater capability, the unit is in a seriously degraded condition. In this condition, the unit should not be perturbed by any action, including a power change, which could result in a plant transient or trip. The seriousness of this condition requires that action be taken immediately to restore operability, where immediately means the required action should be pursued without delay and in a controlled manner. Under these circumstances, Specification 3.0.1 and all other required actions directing mode changes are suspended until one inoperable pump or the inoperable component or instrumentation in one flowpath is restored to OPERABLE status, because taking those actions could place the unit in a less safe condition.

In the event of complete loss of electrical power to the station, residual heat removal would continue to be assured by the availability of either the steam driven auxiliary feedwater pump or one of the motor driven auxiliary feedwater pumps and the 110,000-gallon protected condensate storage tank.

In the event of a fire or high energy line break which would render the auxiliary feedwater pumps inoperable on the affected unit, residual heat removal would continue to be assured by the availability of either the steam driven auxiliary feedwater pump or one of the motor-driven auxiliary feedwater pumps from the opposite unit. A minimum of two auxiliary feedwater pumps are required to be operable* on the opposite unit to ensure compliance with the design basis accident analysis assumptions, in that auxiliary feedwater can be delivered via the cross-connect, even if a single active failure results in the loss of one of the two pumps. In addition, the requirement for operability of the opposite unit's emergency power system is to ensure that auxiliary feedwater from the opposite unit can be supplied via the cross-connect in the event of a common-mode failure of all auxiliary feedwater pumps in the affected unit due to a high energy line break in the main steam valve house. Without this requirement, a single failure (such as loss of the shared backup diesel generator) could result in loss of power to the opposite unit's emergency buses in the event of a loss of offsite power, thereby rendering the cross-connect inoperable. The longer allowed outage time for the opposite unit's emergency power system is based on the low probability of a high energy line break in the main steam valve house coincident with a loss of offsite power.

The specified minimum water volume in the 110,000-gallon protected condensate storage tank is sufficient for 8 hours of residual heat removal following a reactor trip and loss of all offsite electrical power. It is also sufficient to maintain one unit at hot shutdown for 2 hours, followed by a 4 hour cooldown from 547°F to 350°F (i.e., RHR operating conditions). If the protected condensate storage tank level is reduced to 60,000 gallons, the immediately available replenishment water in the 300,000-gallon condensate tank can be gravity-fed to the protected tank if required for residual heat removal. An alternate supply of feedwater to the auxiliary feedwater pump suctions is also available from the Fire Protection System Main in the auxiliary feedwater pump cubicle.

The five main steam code safety valves associated with each steam generator have a total combined capacity of 3,842,454 pounds per hour at their individual relieving pressure; the total combined capacity of all fifteen main steam code safety valves is 11,527,362 pounds per hour. The nominal power rating steam flow is 11,260,000 pounds per hour. The combined capacity of the safety valves required by Specification 3.6 always exceeds the total steam flow corresponding to the maximum steady state power than can be obtained during three reactor coolant loop operation.

The availability of the auxiliary feedwater pumps, the protected condensate storage tank, and the main steam line safety valves adequately assures that sufficient residual heat removal capability will be available when required.

* excluding automatic initiation instrumentation

The limit on steam generator secondary side iodine-131 activity is based on limiting the inhalation dose at the site boundary following a postulated steam line break accident to a small fraction of the 10 CFR 100 limits. The accident analysis, which is performed based on the guidance of NUREG-0800 Section 15.1-5, assumes the release of the entire contents of the faulted steam generator to the atmosphere.

REFERENCES

UFSAR Section 4, Reactor Coolant System

UFSAR Section 9.3, Residual Heat Removal System

UFSAR Section 10.3.1, Main Steam System

UFSAR Section 10.3.2, Auxiliary Steam System

UFSAR Section 10.3.5, Condensate and Feedwater Systems

UFSAR Section 10.3.8, Secondary Vent and Drain Systems

UFSAR Section 14.2.11, Loss of Normal Feedwater

UFSAR Section 14.3.2, Rupture of a Main Steam Pipe

UFSAR Appendix 14B, Effects of Piping System Breaks Outside Containment