Duke Power®
A Duke Energy Company

D.M. JAMIL
Vice President

Duke Power
Catawba Nuclear Station
4800 Concord Rd. / CN01VP
York, SC 29745-9635

803 831 4251
803 831 3221 fax

May 4, 2004

U.S. Nuclear Regulatory Commission
Attention: Document Control Desk
Washington, D.C. 20555

Subject: Duke Energy Corporation
Catawba Nuclear Station, Unit 1
Docket Number 50-413
Steam Generator Outage Summary Report for End of Cycle 14 Refueling Outage
Reply to Request for Additional Information
(TAC Number MC1703)

Reference: Letter from NRC to Duke Energy Corporation, dated April 19, 2004

Please find attached Catawba's reply to the reference Request for Additional Information. The format of the reply is to restate the NRC question, followed by Catawba's response.

There are no regulatory commitments contained in this letter or its attachment.

If you have any questions concerning this material, please call L.J. Rudy at (803) 831-3084.

Very truly yours,

R. Michael Glover /for

Dhiaa M. Jamil

LJR/s

Attachment

A047

xc (with attachment):

L.A. Reyes, Regional Administrator
U.S. Nuclear Regulatory Commission, Region II
Atlanta Federal Center
61 Forsyth St., SW, Suite 23T85
Atlanta, GA 30303

E.F. Guthrie, Senior Resident Inspector
U.S. Nuclear Regulatory Commission
Catawba Nuclear Station

S.E. Peters, Project Manager (addressee only)
U.S. Nuclear Regulatory Commission
Mail Stop O-8 G9
Washington, D.C. 20555-0001

REQUEST FOR ADDITIONAL INFORMATION

DUKE POWER COMPANY

CATAWBA NUCLEAR STATION, UNIT 1

DOCKET NO. 50-413

The Nuclear Regulatory Commission (NRC) staff has reviewed the licensee's submittal dated December 23, 2003, forwarding the End of Core (EOC) 14 Steam Generator Tube Inspection Report for Catawba Nuclear Station (Catawba), Unit 1. The NRC staff has identified the following information that is needed to enable the continuation of its review.

1. The steam generators at Catawba, Unit 1, were replaced in 1996 with Babcock and Wilcox International CFR 80 steam generators. In several locations in your reports, you reference tube support structures (e.g., fan bar 4) and tube locations (e.g., Row 14 Column 55). In order for the NRC staff to better understand the location of the indications, please provide (1) a sketch of the Unit 1 steam generators which depicts the tube support naming conventions and (2) a tubesheet map which depict the rows and columns of the tubes. In addition, please provide the following general design information: tube manufacturer, tube material, tube outside diameter, tube wall thickness, tube support (including fan bar/anti-vibration bar) material and configuration, tube support (including fan bar) thickness, tube pitch and orientation (e.g., 1.1-inch triangular pitch), expansion method, and any other noteworthy design characteristics from a steam generator tube integrity standpoint (e.g., full length stress relief of the row 1 through row 10 tubes). Furthermore, discuss whether measurements from a tube support are from the middle of the support or the edge of the support. For example, does fan bar 5 minus 0.9 inches specify an indication 0.9 inches from the bottom edge of the fan bar?

Duke response:

Steam generators are Babcock & Wilcox International (BWI) CFR 80 vertical U-bend type, containing 6,633 tubes each. Tubing material is drawn thermally treated CrFeNi alloy (Inconel 690) with 0.688" OD and 0.040" nominal wall thickness, produced by Sumitomo. The tubes are hydraulically expanded the entire length

of the tubesheet in both the inlet and outlet. The tubesheet is 27.1 inches thick with the clad. The equilateral triangular tube pitch is 0.930". The tube support structures at Catawba Unit 1 are lattice grids made of 410 Stainless Steel. The lattice grid is made of a series of high bars (approximately three inches thick) oriented at thirty degrees and one hundred fifty degrees to the tube free lane and located every sixth pitch to accommodate the steam generator loading conditions. Low bars (approximately 1 inch in width) are located at every pitch between the high bars. All of the lattice grids are the same except the lowest which incorporates a differential resistance lattice grid. The difference is that the low bars on the periphery are replaced by medium bars (approximately 2.5 inches in width). There are four contact points on each tube. The connector bars (CB) are constructed of 410 Stainless Steel. The U-bend fan bars (FB) are constructed of 410 Stainless Steel. The width of the bars is 1.25 inches. The J-tabs are 316 Stainless Steel. Row 27 and less were stressed relieved full length. Each fan bar assembly is offset along the length of the tube, which means that one fan bar is touching one side of the tube, but a different axial location on the other side of the tube. The inner row tubes are offset so as to make the inner radius larger. They are called "crossover" tubes.

Attachment 1 is a sketch of the Unit 1 steam generators which depicts the tube support naming conventions and Attachment 2 is a tubesheet map which depicts the rows and columns of the tubes. Attachment 3 is the rotating coil characterization codes. Attachment 4 is the bobbin coil characterization codes.

Positive direction is physically upwards in the steam generator with the positive direction stopping at the apex of the U-bend. Measurements should be made using the nearest available landmark. All measurements should be referenced from the center of a landmark. Measurements may be made in a positive or negative direction using the nearest available landmark.

2. For the EOC 14 inspections, please clarify the scope and extent of the inspections. For example, please discuss what probes were used during the inspection, how many tubes were inspected, and what portions of the tubes were inspected with these probes (e.g., 100 percent full-length inspection with a bobbin probe, rotating-probe inspection of the hot-leg expansion transition region (± 3 inches) for 100 percent of the inservice tubes, etc.).

Duke response:

In the A and D steam generators, 100% of the tubes were inspected 100% full length with a bobbin probe. In the B and C steam generators, 100% of the tubes were inspected with the bobbin probe from the tube end through the second lattice grid. In addition, 20% of the tubes were inspected with the rotating coil probe from +2 inches to -8 inches from the top of the tubesheet.

3. Please clarify the results of your inspection. For example:

   a. For the volumetric indications reported, please discuss the source and significance of these indications.

   Duke response:

   The volumetric indications reported are either foreign object wear or manufacturing burnish marks. The majority of VOLs reported are manufacturing burnish marks. Manufacturing burnish marks are benign in that they just interfere with the detection of other flaws. The growth rate of loose part wear is unpredictable and can therefore be significant.

   b. Please clarify the difference between an "NQI" and an "NQS" indication.

   Duke response:

   NQI (non quantifiable indication) is a bobbin characterization code that requires the indication in the tube to be further evaluated with another technique. In this outage, the rotating coil probe was used. NQS (non quantifiable signal) is a rotating coil probe characterization code. The signal was outside the degradation phase plane and NQS was used to track the signal.

   c. Please clarify the potential and actual degradation mechanisms observed in your steam generators. For example, several wear indications have been reported. Please briefly discuss the cause of these indications and the population of tubes susceptible to these mechanisms. In addition, several tubes were inspected/classified as "proximity" tubes in a previous

inspection. Please describe this categorization and the tubes potentially affected by this issue.

Duke response:

The actual degradation is support structure wear (fan bar and lattice grid) and foreign object wear. Wear is caused by the impacting of one surface against another. In the case of fan bar wear, the clearances between the fan bar and the tube are larger than design due to the stackup of tolerances. In the fan bar and lattice wear cases, the populations are small. In the case of foreign object wear, the periphery tubes at the tubesheet are most impacted.

The fan bar assembly is free floating and therefore rests on the tubes for support. During the installation of the fan bar assembly, it was observed that the J-tabs that actually rest on the most outboard tube could be pushed in too far, causing two tubes in the same column to be closer than their ideal design spacing. The tubes are therefore in "proximity". Five sets of tubes have been identified as being in proximity and they were inspected with the rotating coil probe for degradation. No degradation was observed.

4. Seven tubes were plugged and stabilized in steam generator C as a result of a loose part that could not be removed. Please clarify the source and nature of this part. In addition, briefly summarize the corrective actions taken and your basis for the corrective actions (e.g., all steam generators were inspected, the part was surrounded by plugged and stabilized tubes and is not expected to move based on analysis, etc).

Duke response:

The indications were located at approximately 1 inch above the tubesheet. All adjacent tubes were inspected with the rotating coil probe to determine if there were additional tubes affected. There were no other tubes with loose part signals. There was some wear observed on two of the tubes. Retrieval was attempted, but the part could not be removed. Since the part could not be removed, it was determined that the part would not move. However, the part is located on the periphery where the cross flow velocities are high. These tubes were conservatively removed from service and stabilized. The part was characterized as an S-hook. The source is unknown.

5. Several indications were reported as "CHG" indications. Please clarify the meaning of this acronym. Assuming this acronym implies the indication has changed, please discuss what signal characteristic changed and the cause of the change (or provide a description of actions that you may be planning to take to investigate the reason for the change). For the criteria used to determine if a signal exhibits little or no change, discuss how the criteria was determined. For example, was test repeatability evaluated for these types of indications such that the criteria would identify a signal change when the change was greater than normal test repeatability?

Duke response:

Since no cracking has been observed, previous indications that have been characterized by the rotating coil probe were reviewed to determine if change has occurred in the bobbin signal. If no change has occurred, then the indication would not be inspected with the rotating coil probe again. If change has occurred, then the indication would be reinspected for characterization with the rotating coil probe again.

Change is defined as an indication that changes greater than or equal to 0.50 volts or greater than or equal to 10 degrees. The values are empirically based and are within the repeatability of the eddy current test. The primary reason for a signal to change is how the analyst measures the indications.

Attachment 1
CFR 80 Steam Generators

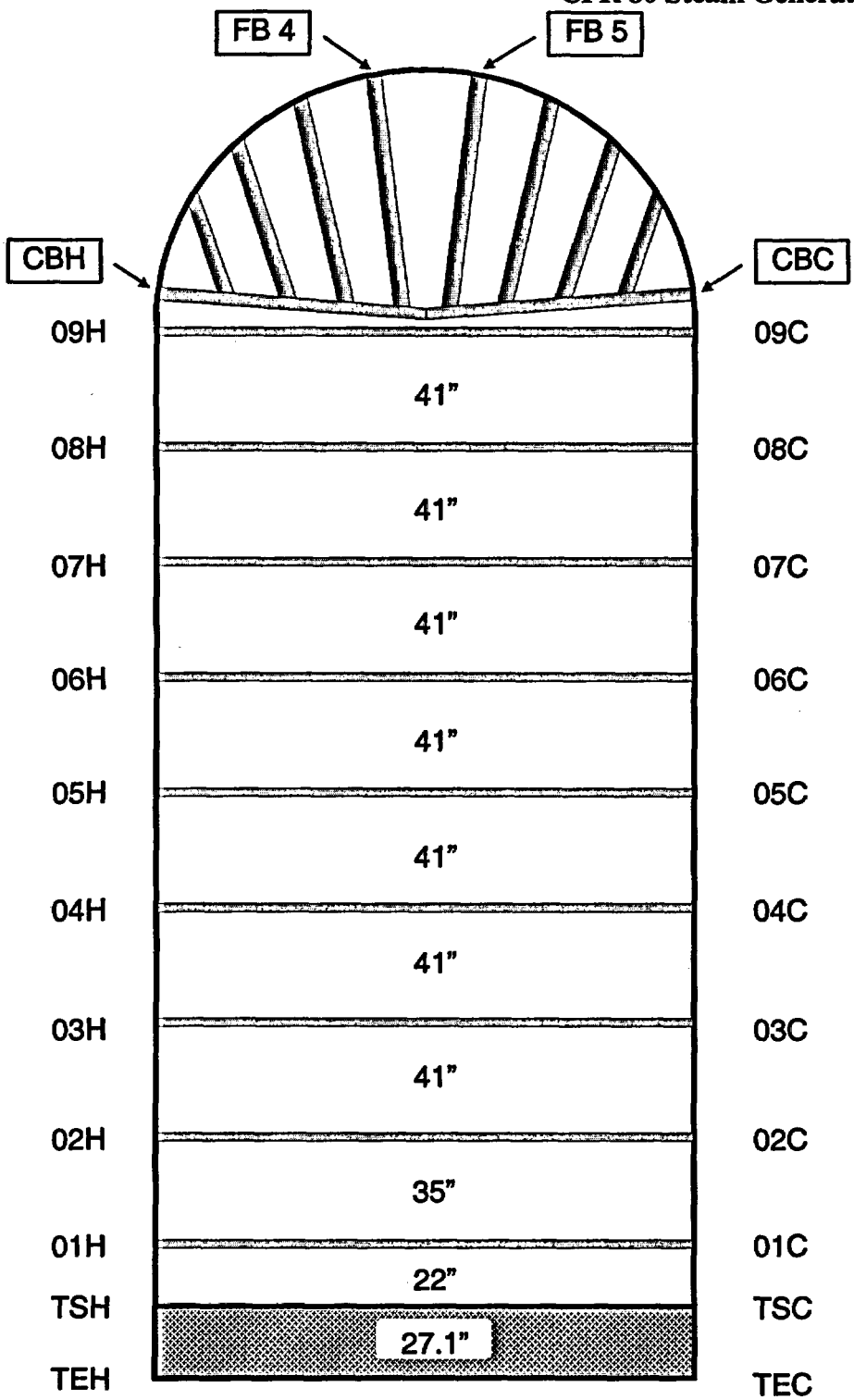

CFR 80

Tube Information:

No. of Tubes	6633
Material:	Inconel 690
Nominal Dia.:	0.688"
Nominal Wall:	0.040"
Row 1 Radius:	3.973"
Straight Length:	31.9'/32.7'
Tube Pitch:	.930"

Roll Plug Information:

Material:	Inconel 690
Nominal Dia.:	0.594"
Nominal Wall:	0.052"

Tube Support Information

Type:	Lattice
Material	410 Stainless
Thickness:	
High:	3.150"
Med.:	2.562"
Low:	1.000"

Connector Bar

Material:	410 Stainless

Fan Bars

Material:	410 Stainless
Thickness	0.110"
Width	1.25"

NOTE: Dimensions are to the centerline of the tube support

Attachment 2

Catawba Nuclear Station
Unit 1

S/G A
HOT
PRIMARY FACE

TOTAL TUBES: 6633
SELECTED TUBES: 0
OUT OF SERVICE (#): NA

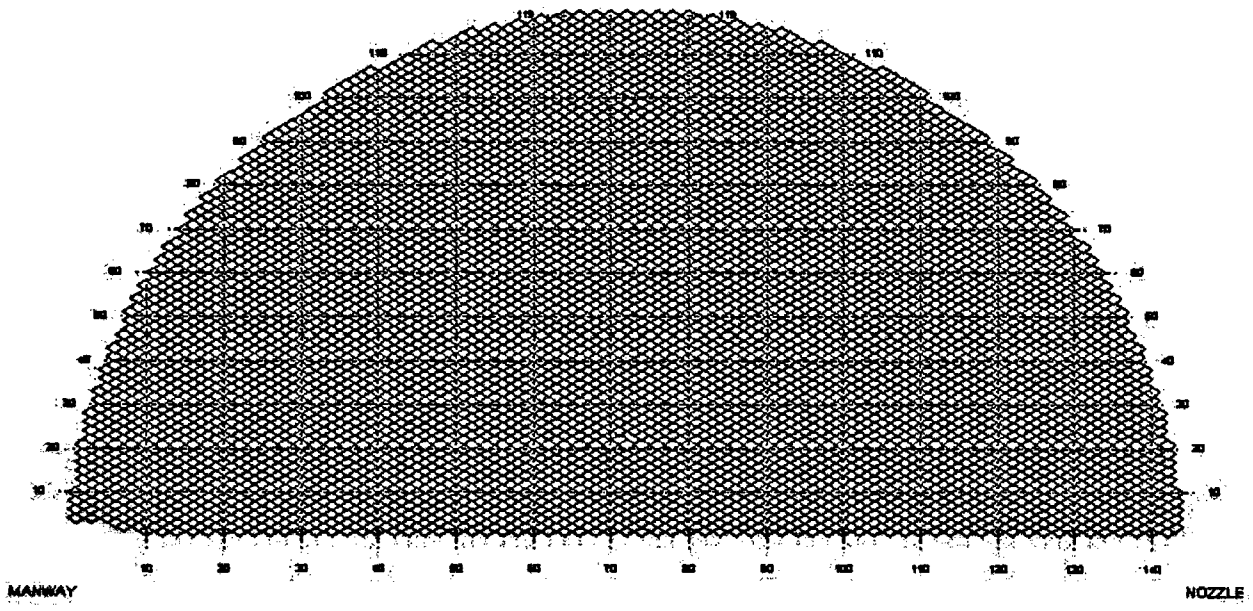

Attachment 3

Rotating Coil Characterization Codes

#		CODE	DESCRIPTION
1	*	AXI	Axial Indication
2		DNT	Dent
3	*	L3R	Level III Review
4		MAI	Multiple Axial Indication
5		MCI	Multiple Circumferential Indication
6		MMI	Mixed-Mode Indication
7		MSG	Analyst Message
8		MVI	Multiple Volumetric Indications
9		NDF	No Defect Found
10		OBS	Obstructed
11		PID	Positive Identification
12		PLP	Possible Loose Part
13		PVN	Permeability Variation
14		RBD	Retest - Bad Data
15		RIC	Retest – Incomplete
16		RNC	Retest – Tube Number Check
17		ROB	Retest – Obstructed
18		SAI	Single Axial Indication
19		SCI	Single Circumferential Indication
20		SVI	Single Volumetric Indication
21		VOL	Volumetric
22	*	WAR	Wear
23		NQS	Non-Quantifiable Signal

* Denotes code to be used in the "UTIL 1" field.

Attachment 4

Bobbin Coil Characterization Codes

#		CODE	DESCRIPTION
1		ADI	Absolute Drift Indication
2	*	AXI	Axial Indication
3		BLG	Bulge
4		BOR	Boron
5		CHT	Chatter
7		DNT	Dent
8		DWI	Dent With Indication
9		FC	Final Calibration
10		FCL	Final Calibration Late
11		ICR	Incomplete Roll
12		IC	Initial Calibration
13		IV	Independent Verification of tube identification
14	*	IDOK	Tube ID Verified; This code shall be used to identify tubes acquired more than once during the current outage. Use of this code requires tube to tube comparison or fingerprinting of the affected tube(s).
15		INF	Indication Not Found
16		INR	Indication Not Reportable
17		IRR	Irregular Roll
18	*	L3R	Level III Review
19		MSG	Analyst Message
20		NEX	No Expansion
21		NFC	No Final Calibration
22		NQI	Non-Quantifiable Indication
23		NSR	Needs SGME Review
24		OBS	Obstructed
25		OVR	Over Roll
26		OXP	Over Expansion
27		PID	Positive Identification
28	*	PLG	Plugged Tube
29		PLP	Possible Loose Parts
30		PVN	Permeability Variation
31		RBD	Retest - Bad Data
32		RFB	Retest - Fan Bar using a wear standard for sizing
33		RIC	Retest – Incomplete
34		RNC	Retest - Tube Number Check
35		ROB	Retest – Obstructed
36		RRC	Retest - Rotating Coil
37		RPD	Retest - Positive Identification
38		SAT	Satisfactory
39		SLG	Sludge
40		SKR	Skip Roll
41	*	WAR	Wear
42		WTG	Wetting/Leaking

* Denotes code to be used in the "UTIL 1" field