May 14, 2004

U. S. NRC Region 1 Administrator
475 Allendale Road
King of Prussia, PA 19406

Subject: Submittal of Initial License Training NRC Written Examination Grading Information
Oyster Creek Nuclear Generating Station
NRC Docket Number 50-219

In accordance with NUREG 1021, Revision 9 draft, "Operating Licensing Examination Standards for Power Reactors", Oyster Creek Nuclear Generating Station is submitting the attached changes to the initial license training NRC written examination grading material for review and approval. This is in support of the NRC initial license examination completed April 21, 2004.

There were 12 questions submitted with answer key changes on April 28,2004. After further review we are attaching additional information relative to those questions.

Question 19	Additional information provided to support original position
Question 23	Additional information provided to support original position
Question 25	Additional information provided to support original position
Question 37	Additional information provided to support original position
Question 47	Additional information provided to support original position
Question 71	Changed original position to accept a single corrected answer as A
Question S3	Additional information provided to support original position
Question S7	Additional information provided to support original position
Question S12	Additional information provided to support original position
Question S22	Additional information provided to support original position
Question S23	Additional information provided to support original position
Question S25	Changed original position to accept a single corrected answer as D

In accordance with NUREG 1021, Revision 9 draft, Section ES-201, please ensure that these materials are withheld from public disclosure until after the examinations are complete.

Please contact Greg Young at (609) 971-4196 with any questions concerning this letter or the attached information.

Respectfully,

Jesse D. Hackenberg
Facility Representative/Training Director(Acting)
Oyster Creek Nuclear Generating Station

Enclosure: (Delivered to John Caruso, Chief Examiner, NRC Region 1)
Comments on changes to exam questions

QUESTION #19

Given the following conditions:

- A Loss of Offsite Power has occurred
- Reactor is at rated temperature and pressure
- The drywell pressure entry condition for EMG-3200-02, "Primary Containment Control" has been satisfied.
- Reactor water level is 0" TAF and decreasing.
- You are operating "all available DW cooling".
- The CRS asks, "Can bulk drywell temperature be maintained below 150 degrees F"?
- Your response is "**NO**".

What is the basis for this response?

A. A LOCA signal has caused Chilled water to isolate.

B. A High Drywell Pressure signal caused Drywell recirc fans to trip.

C. A LOCA signal has caused RBCCW isolation valves to isolate.

D. The rated capacity of 5 drywell recirc fans is inadequate.

ANSWER: C

Question 19: Oyster Creek's position

The question asks:

"Given the following conditions:

- A loss of offsite power has occurred
- Reactor is at rated temperature and pressure
- The drywell pressure entry condition for EMG-3200.02, "Primary Containment Control" has been satisfied
- Reactor water level is 0" TAF and decreasing
- You are operating "all available DW cooling"
- The CRS asks: "Can bulk drywell temperature be maintained below 150 degrees F?"
- Your response is "NO"

What is the basis for this response?"

The intent of the question as written was for the candidate to determine that a LOCA had caused RBCCW cooling to the drywell to isolate, therefore, triggering the response that drywell temperature could not be maintained below 150 deg. F based upon the loss of drywell cooling. The third and fourth bullets above derive this. In this case, the candidate will choose answer "C".

However, the wording of the fifth bullet is the exact wording used in a particular step of the Drywell Temperature leg of Primary Containment Control. Since the candidates had a copy of the Primary Containment Control EOP, and given the wording contained within the quotation marks, some of the candidates went directly to the step in the Drywell Temperature leg containing the wording "Operate all available drywell cooling". This step directs the operator to bypass the RBCCW isolation signals and start all available drywell recirc fans. The logic the candidates used was

1. The information was in quotation marks, so it was therefore important to the answer
2. The only applicable step in Drywell Temperature that contains this specific wording is the step directing RBCCW isolations to be bypassed and all available drywell cooling (fans and RBCCW flow to the coolers) to be operated
3. Therefore, Support Procedure 27 has already been completed and RBCCW isolations have been defeated. Otherwise, this specific wording would not have been used in the question.

Based upon the above logic, the candidate would choose answer "D" which says the rated capacity of five drywell recirc fans is inadequate.

If the wording of the fifth bullet simply stated all drywell recirc fans are running, and nothing was contained in quotation marks, the candidates could not apply the above logic, and the only correct answer could be "C".

Therefore, since there is no time line given for the LOCA event, and given the question construction, answers "C" and "D" are correct.

Oyster Creek recommendation: Accept "C" and "D"

References: EMG-3200.02, Primary Containment Control (sent previously)
EOP User's Guide, pp. 2-14 through 2-16 (sent previously)
SP-27 Maximizing Drywell Cooling

REDUCTION OF PRIMARY CONTAINMENT PRESSURE WILL REDUCE THE NPSH AVAILABLE FOR PUMPS TAKING SUCTION FROM THE TORUS

MONITOR BULK DRYWELL TEMPERATURE USING THE PLANT COMPUTER OR PER **SUPPORT PROC - 26**

MAINTAIN BULK DRYWELL TEMPERATURE BELOW **150° F** USING AVAILABLE DRYWELL COOLERS

CAN BULK DRYWELL TEMPERATURE BE MAINTAINED BELOW **150° F** ?

YES

NO

UE

OPERATE ALL AVAILABLE DW COOLING PER **SUPPORT PROC - 27**

IF	THEN
BULK DRYWELL TEMPERATURE EXCEEDS **150°F**	EVALUATE THE USABILITY RPV WATER LEVEL INSTRUMENTATION PER **SUPPORT PROC - 28**
DRYWELL SPRAYS HAVE BEEN INITIATED **AND** TORUS OR DRYWELL PRESSURE DROPS BELOW **1.0 PSIG**	CONFIRM TERMINATION OF DRYWELL SPRAYS

BEFORE

BULK DRYWELL TEMPERATURE REACHES **281°F**

ENTER EMG– 200.01A, RPV CONTROL – NO ATWS, AT---- A AND PERFORM IT CONCURRENTLY WITH THIS PROCEDURE

A

DRYWELL TEMPERATURE CONTROL

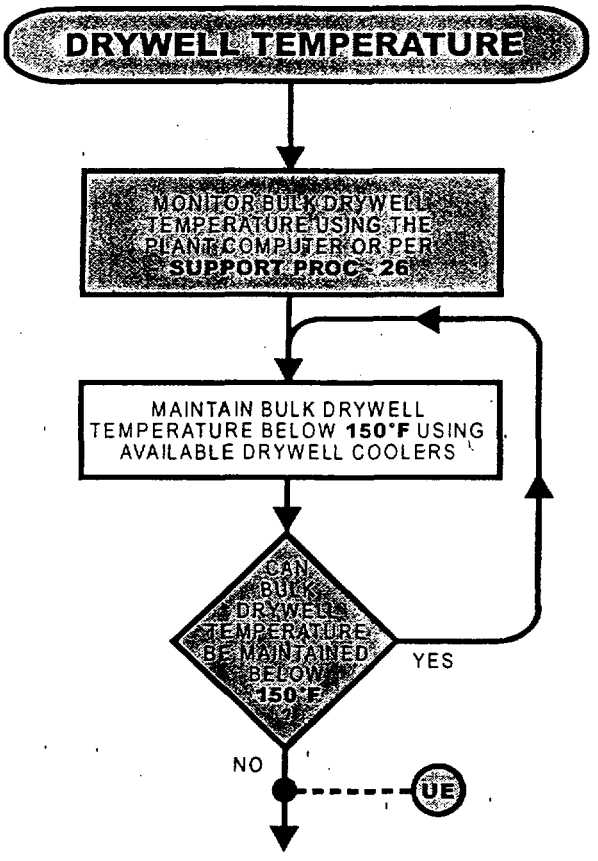

DISCUSSION

Normal system operating procedures provide instructions for controlling Drywell temperature during routine Plant operations, both shut down and at power. Under most circumstances, maintaining the required number of Drywell recirculation fans in operation, maintaining Drywell instrument nitrogen/air to support operation of the Drywell recirculation fan dampers, and maintaining a sufficient flow of cooling water to the Drywell coolers prevents excessive Drywell temperatures. The appropriate system lineups are established according to the following procedures:

- Procedure 312.9, Primary Containment Control, ensures four or five Drywell recirculation fans are in service.

  Procedure 309.2, Reactor Building Closed Cooling Water System, ensures at least one Reactor Building Closed Cooling Water (RBCCW) pump is running and one RBCCW heat exchanger is on-line.

Additionally, if Drywell temperature problems arise, Alarm Response Procedures and System Diagnostic and Restoration Procedure OPS-3024.09 prescribe actions that may be taken to maintain Drywell temperatures in the normal range.

DRYWELL TEMPERATURE CONTROL

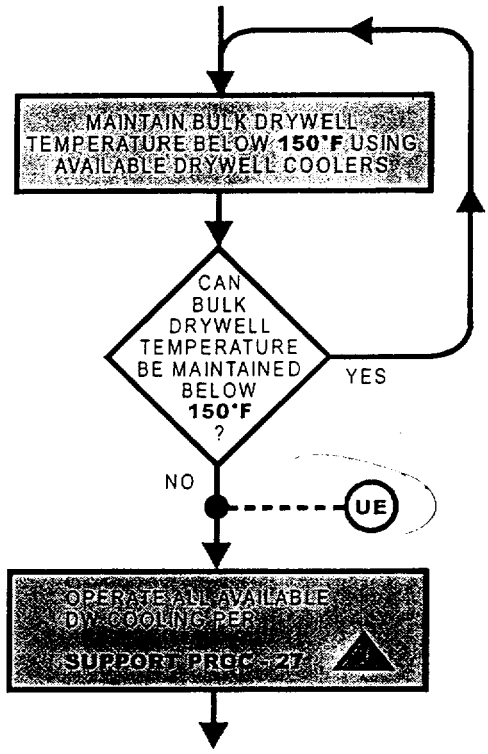

DISCUSSION

This question is asked if normal means of temperature control were adequate to maintain Drywell bulk temperature below 150°F. If normal methods were unsuccessful, then further actions are required.

Following the "DECISION" step is an Unusual Event flag. EPIP-OC-.01 recommends an Unusual Event Classification if Drywell bulk temperature is greater than or equal to 150°F, but less than or equal to 281°F for 5 minutes or longer.

DRYWELL TEMPERATURE CONTROL

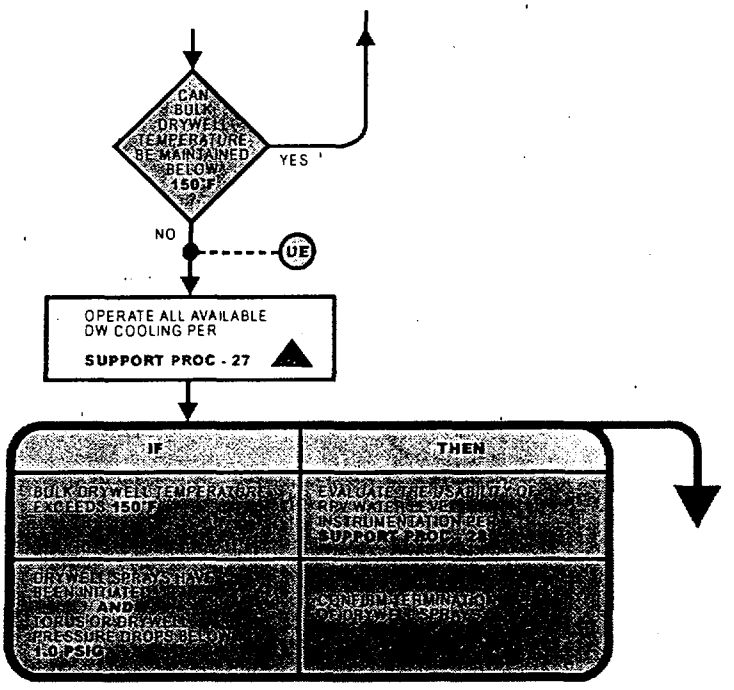

DISCUSSION

If Drywell bulk temperature cannot be maintained below 150°F, cooling from all available Drywell coolers is maximized. Such actions may include:

- Operation of all five Drywell recirculation fans
- Operation of two RBCCW pumps and both RBCCW heat exchangers
- Operation of two Service Water pumps
- Maximizing Service Water flow to the RBCCW heat exchangers

These actions are performed at the discretion of the LOS.

The RBCCW system isolates upon the occurrence of either of the following conditions:

- Lo-Lo RPV water level AND high Drywell pressure
- Lo-Lo-Lo RPV water level

The pneumatic supply to the Drywell is required to maintain open the Drywell recirculation fan dampers. The Drywell pneumatic supply isolates on any one of the following conditions:

- Lo-Lo RPV water level
- Steam tunnel temperature at or above 180°F
- Any steam line flow at or above 4.0 mlbm/hr
- Reactor mode switch in RUN AND RPV pressure at or below 850 psig

Support Procedure -27 performs the following:

1) Defeats all isolation signals to the RBCCW Drywell isolation valves
2) Confirms open the RBCCW Drywell isolation valves
3) Starts all available Drywell recirc fans
4) Bypasses the Instrument Air Isolation valve, V-6-395 isolation signal and reopens the valve

SUPPORT PROCEDURE 27

MAXIMIZING DRYWELL COOLING

1.0 PREREQUISITES

The operation of all available drywell coolers has been directed by the Emergency Operating Procedures AND the RBCCW System is NOT isolated due to a LOCA or MSLB in the Drywell.

2.0 PREPARATION

2.1

> CAUTION
>
> Reinitiating RBCCW flow to the Drywell following a LOCA or MSLB in the Drywell may cause a water hammer to occur and subsequent piping failure.

Verify that the RBCCW System is not isolated due to high Drywell pressure/low RPV water level conditions. _____

2.2 IF the RBCCW System is isolated due to high Drywell pressure/low RPV water level,

THEN inform the LOS and do not attempt to reinitiate the RBCCW System flow to the Drywell. _____

2.3

> NOTE
>
> After completing the following steps, valves V-5-147, V-5-166 and V-5-167 will only operate from the Control Room. All automatic operation is removed.

In the rear of Panel 2R, open the EOP BYPASS PLUGS panel.

2.3.1 Remove the bypass plug from position BP1. _____

2.3.2 Remove the bypass plug from position BP2. _____

3.0 PROCEDURE

3.1 Confirm open RBCCW Isolation Valves (Panel 1F/2F)

- V-5-147 _____
- V-5-166 _____
- V-5-167 _____
- V-5-148 _____

OVER

3.2 Start all available DW RECIRC FANS by placing their respective control switches in ON (Panel 11R). _____

3.3 Place the ISOL SIGNAL BYPASS V-6-395 switch in BYPASS position (Panel 11F). _____

3.4

> CAUTION
>
> A rapid decrease in Drywell temperature could cause a corresponding drop in Drywell Pressure and possible deinertion.

Operate DW RECIRC FANS (Panel 11R) as required to control Drywell temperature.

8.3.1.2

NOTE

Drywell Recirculation Fan 1-3 is for standby use only due to it being belt driven. The four remaining direct drive fans should normally be in service.

START the four direct driven Drywell Recirculation Fans by placing their respective control switches in the ON position while monitoring the fan start indicating lights (Panel 11R). [ ]

8.3.1.3 IF required for drywell temperature control

THEN **START** the 1-3 Drywell Recirculation Fan by placing it's control switch in the ON position while monitoring the fan start indicating lights (Panel 11R). [ ]

8.3.2 **SECURE** the Drywell Recirculation Fans as follows:

8.3.2.1

CAUTION

Removing fans from service may cause Drywell pressure to rise. A Containment Isolation will occur at 3 psig.

IF 1-3 Drywell Recirculation Fan in no longer required for drywell temperature control

THEN **Place** the 1-3 Drywell Recirculation Fan control switch in the OFF position (Panel 11R) [ ]

8.3.2.2 Secure the remaining fans as required as follows

PLACE the selected fan(s) control switch in the OFF position (Panel 11R). [ ]

7.3.10 **MAINTAIN** Drywell and Torus ventilation in accordance with Procedure 233, Drywell Access and Control.

8.0 DRYWELL COOLER FAN OPERATION

8.1 Prerequisites

8.1.1 Reactor Building Closed Cooling Water System (RBCCW) is operating in accordance with Procedure 309.2. [ ]

8.1.2 480 Volt Electrical System is operating in accordance with Procedure 338. [ ]

8.1.3 MCC 1A23 and MCC 1B23 are energized in accordance with Attachment 312.9-1. [ ]

8.2 Precautions and Limitations

8.2.1 Four Drywell Recirculation Fans should be in operation at all times. If Drywell ventilation must be reduced during Reactor operation, closely monitor Drywell pressure (Panel 12XR) and adjust pressure in accordance with Procedure 312.11.

8.3 Instructions

8.3.1 **PLACE** the Drywell Recirculation Fans in operation as follows:

8.3.1.1 **OPEN** the following valves (Panel 1F/2F):

- CCW INLET ISOLATION V-5-147 [ ]
- CCW INLET ISOLATION V-5-167 [ ]
- DRYWELL CLG SHUT-OFF V-5-148 [ ]
- CCW OUTLET ISOLATION V-5-166 [ ]

QUESTION #23

Given the following plant conditions:

- Reactor is at 100% power
- AOG is in service
- Main Steam Line Radiation Monitors all at approximately 550 mr/hr
- Stack Effluent HI alarm
- Reactor Bldg Vent Radiation at 8 mr/hr
- RCS activity at 90% of TS limit
- "B" IC isolated for maintenance
- Significant/visible packing leak from "A" IC outboard steam isolation valve
- **NO** leaks in the "A" IC tube bundle

What action(s) would result in having the greatest reduction in the thyroid damage for the public?

A. Close "A" IC outboard steam isolation valve

B. Reduce reactor power until stack effluent HI alarm clears

C. Start SGTS and shutdown Reactor Building HVAC

D. Close "A" IC vent valve

ANSWER: C

Question 23: Oyster Creek's position

The question asks:

"Given the following plant conditions:

- Reactor is at 100% power
- AOG is in service
- Main Steam Line Radiation Monitors are all at approximately 550 mr/hr
- Stack Effluent Hi alarm
- Reactor Building Vent Radiation at 8 mr/hr
- RCS activity at 90% of TS limit
- "B" IC isolated for maintenance
- Significant/visible packing leak from "A" IC outboard steam isolation valve
- **NO** leaks in the "A" IC tube bundle

What action(s) would result in having the greatest reduction in the thyroid damage for the public?"

The intent of the question as written was to recognize plant conditions which would require a decision to secure normal Reactor Building ventilation and initiate Standby Gas.

The question construction forces the candidate to evaluate all plant conditions presented in the bullets for any conditions that will govern entry into EOPs, ABNs, and RAPs. This is a logical thought process all candidates go through when presented with numerous, significant plant conditions. They are conditioned to look for those parameters which will force entry into various procedures.

The plant conditions are below the threshold entry conditions for Secondary Containment Control (vent radiation monitors at or above 9 mr/hr).

However, the plant conditions presented will dictate actions in accordance with ABN-26, High Main Steamline or Offgas Activity. The applicability for entry into this procedure is Main Steam radiation levels 550 to 800 mr/hr. Also, RAP 10F-2-d, Stack Effluent HI, directs actions in accordance with ABN-26.

In Section 3.3 of ABN-26, the following actions are directed:

1. If reactor power is greater than 40% and off gas activity rises by more than 50% after factoring out any rise due to changes in thermal power, then direct chemistry to sample off gas and the reactor coolant, refer to Tech Specs 3.6.E and 4.6.E, and request guidance from reactor engineering.
2. If any of the following alarms are received (off gas hi (10F-2-c), stack effluent hi (10F-2-d) or stack effluent hi-hi (10F-1-d)), then review recent changes in offgas flow, condenser vacuum, steam seal header pressure, notify chemistry of the condition, reduce reactor power until all three radiation alarms have cleared. If all three radiation alarms cannot be cleared, then direct chemistry to sample the reactor coolant and off gas.

Our position is that answers "B" and "C" are both correct, depending upon how the candidate interpreted the presented plant conditions. If the candidate assessed the conditions as to what procedurally-directed actions are required, then reducing reactor power until the stack effluent HI alarm clears is a correct statement ("B"). If the candidate assessed the conditions and determined it is necessary to take actions based upon their judgment to initiate an engineered safeguard system (even though it is not specifically directed by plant procedures,) then starting SGTS and securing Reactor Building HVAC is a correct statement ("C").

Based upon the presented plant conditions and recognition by the candidate that an entry condition to ABN-26 has been met, the only action procedurally dictated by these plant conditions is to reduce reactor power until [all three radiation alarms] the Stack Effluent Hi alarm clears. This is answer "B".

The suggested answer ("C"), to start SGTS and shutdown Reactor Building HVAC, forces the candidate to forego procedurally dictated actions for the existing plant conditions, and make a decision to operate SGTS in order to filter the reactor building atmosphere through SGTS before being sent to the plant stack.

Procedure OP-OC-100, Oyster Creek Conduct of Operations, sections 5.1.1 and 5.1.2 gives SROs as well as ROs the authority to initiate an engineered safeguard system when, in their judgment a situation exists which jeopardizes or threatens to jeopardize public or plant safety.

All licensed operators (ROs and SROs) are trained to recognize entry conditions into ABNs, and when entry conditions are present, to execute the appropriate ABN even if not specifically ordered to do so by the Unit Supervisor. Additionally, it is the RO who will be referred to ABN-26 from the Stack Effluent Hi alarm RAP. Reactor Operators have learning objectives dealing with identification of procedures used during abnormal conditions. Specifically:

1. (L.O. #1406) Assess given plant conditions, reports or control room indications and determine if an abnormal operating procedure (ABN) applies without the aid of references.
2. (L.O. #1407) Evaluate plant conditions during a transient and determine which (if any) abnormal operating procedure (ABN) is applicable.

Based upon our learning objectives and our Conduct of Operations, this question pertains to both Reactor Operators as well as Senior Reactor Operators.

In our judgment, this question is written to give specific procedural entry conditions, but then requires the candidate to forego the procedural guidance if he was to choose the suggested correct answer. We have trained the operators to execute approved procedures when they are applicable. Instead of supplying specific plant conditions in the question stem and expecting the candidate to choose a general course of action, it would be more appropriate to word the question in general terms in order to preclude this inherent conflict the question presented.

Therefore, answers "B" and "C" are correct.

Oyster Creek recommendation: Accept "B" and "C"

References: RAP 10F-2-d, "STACK EFFLUENT HI" (sent previously)
ABN-26, High Main Steam Line or Off-Gas Activity (sent previously)
OP-OC-100 Oyster Creek Conduct of Operations

Group Heading RADIATION MONITORS PROCESS STACK EFFLUENT	10F - 2 - d

STACK EFFLUENT HI	REFLASH

CAUSES:	SETPOINTS:	ACTUATING DEVICES:
(1) HI concentration of noble gas radioactivity in the main stack effluent.	1,000 cps	Ch. #1 RE-661-1621 VIA RIT-661-1615 VIA RYS-661-1615 Ch. #2 RE-661-1622 VIA RIT-661-1624 VIA RYS-661-1624 Reflash unit: PNL-661-1RAR3
		Reference Drawings: GU 3E-611-17-003 GU 3D-661-42-001

CONFIRMATORY ACTIONS:

Verify the high radiation level at the Stack RAGEMS noble gas effluent monitors on Panel 1R or Stack RAGEMS effluent recorders on Panel 10F. If the alarm is from a high concentration of noble gas in main stack effluent as verified from the Panel 10F Recorders, follow the manual corrective actions. If desired, contact Plant Chemistry to take a stack effluent noble gas sample.

If the primary containment was being vented, the source of the high stack activity may be from the primary containment. If the source of the activity is confirmed to be from the primary containment, the GSS shall insure the containment is vented through the Standby Gas Treatment System.

AUTOMATIC ACTIONS:

NONE

MANUAL CORRECTIVE ACTIONS:

Check for high radiation in the offgas stream, Reactor Building, Turbine Building, Old Radwaste, and New Radwaste, or trip of the Reactor Building Ventilation System and perform actions defined in Procedure 2000-ABN-3200.26, Increase in Offgas Activity.

Notify Chemistry of condition. The Offsite Dose Calculation Manual (ODCM 2000-ADM-4532.04, Section 4.6.1.1.5.c) may apply.

AmerGen An Exelon/British Energy Company	OYSTER CREEK GENERATING STATION PROCEDURE	Number ABN-26	
Title HIGH MAIN STEAM LINE OR OFF-GAS ACTIVITY		Usage Level 1	Revision No. 0

Prior Revision 0 incorporated the following Temporary Changes:

N/A

This Revision 0 incorporates the following Temporary Changes:

N/A

List of Pages

1.0 to 7.0

OYSTER CREEK
CONTROLLED DISTRIBUTION
DOCUMENT SERIAL NUMBER 298
IRMC

HIGH MAIN STEAM LINE OR OFF GAS ACTIVITY

1.0 APPLICABILITY

This procedure provides directions for abnormally high Main Steam line or Off Gas radioactivity release rates.

Section 3.1 Main Steam Radiation Levels 550 to 800 mr/hr

Section 3.2 Main Steam Radiation Levels greater than 800 mr/hr

Section 3.3 Rise in Off Gas Activity

2.0 INDICATIONS

2.1 Annunciators

Engraving	Location	Setpoint
OFF GAS HI-HI	10F-1-c	1,000 mr/hr
OFF GAS HI	10F-2-c	700 mr/hr
STACK EFFLUENT HI-HI	10F-1-d	2,000 cps
STACK EFFLUENT HI	10F-2-d	1,000 cps
RAD HI	J-5-b	550 mr/hr

2.2 Plant parameters

Parameter	Location	Change
Air ejector off gas radiation	Panel 10F, 1R	Rising
Stack effluent radiation	Panel 10F, 1R	Rising
Main steamline radiation	Panel 10F, 1R, 2R	Rising

2.3 Other indications – None

3.0 OPERATOR ACTIONS

If while executing this procedure, an entry condition for any EOP occurs,

then EXECUTE this procedure concurrently with the appropriate EOP.

3.1 Main Steam Radiation Levels 550 to 800 mr/hr

1. **If** two or more Main Steam Line Radiation Monitors, on Panel 1R and 2R are verified greater than 550 mr/hr, **but** less than 800 mr/hr,

   then PERFORM the following:

   A. **DIRECT** Chemistry to sample the Reactor coolant. [ ]

   B. **MONITOR** off gas and stack effluent activity. [ ]

   C. **If** Hydrogen Injection is in operation,

      then PERFORM the following:

      1. **REDUCE** Hydrogen Injection flow rate to between 5 and 6 scfm. [ ]

      2. **ALLOW** 10 minutes for the Main Steam RAD HI alarm (J-5-b) to clear. [ ]

      3. **If** Main Steam RAD HI alarm (J-5-b) clears within 10 minutes,

         then PERFORM the following:

         a. **MONITOR** off gas and stack effluent activity. [ ]

         b. **NOTIFY** Reactor Engineering of plant conditions. [ ]

4. **If** Main Steam RAD HI alarm (J-5-b) does **not** clear within 10 minutes, **and** fuel damage is confirmed by chemistry sample analysis and/or rising off gas activity, [ ]

   then COMMENCE plant shutdown in accordance with Procedure 203, Plant Shutdown.

5. **If** Hydrogen Injection is **not** in operation, **and** fuel damage is confirmed by chemistry sample analysis and/or rising off gas activity, [ ]

   then COMMENCE plant shutdown in accordance with Procedure 203, Plant Shutdown.

3.2 Main Steam Radiation Levels greater than 800 mr/hr

1. **If** two or more Main Steam Line Radiation Monitors, on Panel 1R and 2R are verified greater than 800 mr/hr, **and** off gas activity is rising, [ ]

   then SCRAM the Reactor in accordance with ABN-1, Reactor Scram.

2. **If** the Reactor has successfully scrammed,

   then CLOSE the following valves:

   - MSIVs [ ]
   - Isolation Condenser vents [ ]
   - Reactor Water sample valves V-24-29 and V-24-30 [ ]
   - Drywell Air Supply valve V-6-395 [ ]

3. **MONITOR** off gas and stack effluent activity. [ ]

4. **EVACUATE** the Turbine Building and/or the Reactor Building as directed by the US. [ ]

5. **REFER** to EPIP-OC-01, Classification of Emergency Conditions, for EAL evaluation. [ ]

6. **NOTIFY** Reactor Engineering of plant conditions. [ ]

3.3 Rise in Off Gas Activity

1. **If** Reactor power is greater than 40%, **and** off gas activity rises by more than 50% after factoring out any rise due to changes in thermal power,

   then PERFORM the following:

   A. **DIRECT** Chemistry to sample off gas and the Reactor coolant. [ ]

   B. **REFER** to Technical Specifications 3.6.E and 4.6.E. [ ]

   C. **REQUEST** guidance from Reactor Engineering. [ ]

2. **If** any of the following alarms are received,

   - OFF GAS HI (10F-2-c) [ ]
   - STACK EFFLUENT HI (10F-2-d) [ ]
   - STACK EFFLUENT HI-HI (10F-1-d) [ ]

   then PERFORM the following:

NOTE:	A change in any of the listed parameters may cause a fluctuation in the off gas release rate.

   A. **REVIEW** recent changes in any of the following parameters.

   - Off Gas line flow [ ]
   - Condenser vacuum
   - Steam seal header pressure

B. **NOTIFY** Chemistry of the condition. [ ]

C. **REDUCE** Reactor power until all three radiation alarms listed in Step 2 have cleared. [ ]

D. **If** all three radiation alarms listed in Step 2 **cannot** be cleared,

then DIRECT Chemistry to sample the Reactor coolant and off gas. [ ]

3. **If** the OFF GAS HI-HI alarm (10F-1-c) is received,

then PERFORM the following:

A. **VERIFY** off gas conditions. [ ]

B. **REDUCE** Reactor power until the OFF GAS HI-HI alarm clears. [ ]

C. **COMMENCE** plant shutdown in accordance with Procedure 203, Plant Shutdown. [ ]

D. **If** the OFF GAS HI-HI alarm does **not** clear within 15 minutes of actuation,

then PERFORM the following:

1. **SCRAM** the Reactor in accordance with ABN-1, Reactor Scram. [ ]

2. **CONFIRM** the following valves closed:

   - Off Gas Exhaust Isolation Valve, V-7-31, on Panel 10XF [ ]
   - AOG Inlet Valve, AOV-0001A/-0001B, on Panel 10XF [ ]

3. **PLACE** Drain Valves, V-7-29/SOV-016 control switch in the CLOSE position on Panel 10XF. [ ]

4. **If** the Reactor has successfully scrammed,

   then CLOSE the following valves

   - MSIVs [ ]
   - Isolation Condenser vents [ ]
   - Reactor Water sample valves V-24-29 and V-24-30 [ ]
   - Drywell Air Supply valve V-6-395 [ ]

5. **EVACUATE** the Turbine Building and/or the Reactor Building as directed by the US. [ ]

4. **REFER** to EPIP-OC-01, Classification of Emergency Conditions, for EAL evaluation. [ ]

5. **MONITOR** off gas and stack effluent activity. [ ]

6. **NOTIFY** Reactor Engineering of plant conditions. [ ]

4.0 REFERENCES

4.1 Technical Specifications

4.2 ABN-1, Reactor Scram

4.3 Procedure 203, Plant Shutdown

5.0 ATTACHMENTS – None

SUPPORT PROCEDURE 49

CONFIRMATION OF SECONDARY CONTAINMENT INITIATIONS AND ISOLATIONS

1.0 PREREQUISITES

Confirmation of the isolation of Reactor Building Ventilation and initiation

of SGTS has been directed by the Emergency Operating Procedures.

2.0 PREPARATION

None

3.0 PROCEDURE

Confirm the following:

3.1 Both SGTS fans, EF 1-8 and EF 1-9, start (Panel 11R). _____

3.2 The following Reactor Building Main Supply Header Valves close (Panel 11R).

- V-28-1/V-28-2 _____
- V-28-3/V-28-4 _____
- V-28-5/V-28-6 _____
- V-28-7/V-28-8 _____
- V-28-9/V-28-10 _____
- V-28-11/V-28-12 _____
- V-28-13/V-28-14 _____
- V-28-15/V-28-16 _____
- V-28-36/V-28-37 _____
- V-28-38/V-28-39 _____

3.3 Reactor Building Containment Isolation Valves Close (Panel 11R)

- V-28-21 _____
- V-28-22 _____

OVER

3.4 Reactor Building Supply Fans trip (Panel 11R)

- SF 1-12 _____
- SF 1-13 _____
- SF 1-14 _____

3.5 Operating Reactor Building Exhaust Fan trips (Panel 11R)

- EF 1-5 or, _____
- EF 1-6 _____

3.6 Drywell Ventilation Supply Valves Close (Panel 11R)

- V-28-42 _____
- V-28-43 _____

3.7 WHEN proper flow is established in the selected SGTS Train,

THEN Confirm the following:

1. SGTS Crosstie V-28-48 closes (Panel 11R). _____
2. The non-selected SGTS Fan trips (Panel 11R). _____
3. The non-selected SGTS Train inlet and discharge valves close (Panel 11R).

   _____

4. The running SGTS Train orifice valve closes (Panel 11R).

   _____

SUPPORT PROCEDURE 50

REACTOR BUILDING VENTILATION RESTART

1.0 PREREQUISITES

The restart of Reactor Building Ventilation has been directed by the Emergency Operating Procedures.

2.0 PREPARATION

When directed by the LOS, perform the following:

2.1 Verify that the Reactor Building Ventilation Effluent Monitors (Reactor Building Vent Manifold No. 1 and No.2)are reading less than **9 mREM/hr** (Panel 2R).

_____

2.2 Open the EOP BYPASS PLUGS panel in the rear of Panel 11R.

2.2.1 Remove the bypass plug from Position BP4. _____

2.2.2 Insert the bypass plug into Position BP1. _____

3.0 PROCEDURE

When directed by the LOS, perform the following:

3.1 Open the Exh. Valves to Main Exhaust V-28-21 and V-28-22 (Panel 11R).

_____

3.2 Reset the Reactor Building Ventilation System by depressing the RX Bldg. Vent Isolation RESET button (Panel 11R).

_____

3.3

CAUTION
Steps 3.4 and 3.5 should be completed immediately after starting Exhaust Fan EF-1-5 in order to preclude damage to Ventilation System Ducts.

Start Reactor Building Exhaust Fan EF 1-5 by placing its control switch in START (Panel 11R).

_____

3.4 Confirm control switch for Main Supply Header Valves to DW V-28-42 and V-28-43 in CLOSE (Panel 11R).

_____

3.5 Select and start two of the following Reactor Bldg Supply Fans, SF 1-12, SF 1-13, and SF 1-14, by placing their control

switches in ON (Panel 11R).

_____

4.3 Manual Startup of Standby Gas Treatment System I

4.3.1 IF water evaporator in CRD rebuild room is operating,

THEN **SECURE** water evaporator in accordance with Procedure 358. [ ]

4.3.2 IF truck ventilation hose for the Reactor Building railroad airlock is in use,

THEN **SECURE** use and disconnect hose from truck.

4.3.3 IF SGTS I is operable,

THEN **CONFIRM** STANDBY GAS SELECT switch to SYS 1 (Panel 11R). (This will make SGTS I the preferential system) [ ]

4.3.4 **START** Exhaust Fan EF-1-8 by placing control switch to HAND position (Panel 11R). [ ]

4.3.5 **VERIFY** the following (Panel 11R):

- Exhaust Fan EF-1-8..... starts [ ]
- Inlet valve V-28-23.....opens [ ]
- Orifice valve V-28-24 .....opens [ ]
- Outlet valve V-28-26 .....opens [ ]

4.3.6 AFTER SGTS I flow is established,

THEN **VERIFY** the following (Panel 11R):

- SGTS I orifice valve V-28-24..... closes [ ]
- SGTS II orifice valve V-28-28 .....opens [ ]

4.3.7 **PLACE** SGTS Crosstie valve V-28-48 control switch to CLOSE and **VERIFY** green CLOSE indication is illuminated (Panel 11R). [ ]

4.3.8 **SHUTDOWN** Reactor Building Ventilation System in accordance with Procedure 329, if determined necessary by the OS. [ ]

4.0 MANUAL STARTUP OF THE STANDBY GAS TREATMENT SYSTEM

4.1 Prerequisites

4.1.1 System must be in Standby Readiness in accordance with Section 3.0 of this Procedure. [ ]

4.1.2 RadPro has been notified the SGTS will be placed in service and normal Reactor Building ventilation may be secured. [ ]

4.2 Precautions and Limitations

4.2.1 Precautions and Limitations 3.2.3 to 3.2.5 are applicable.

4.2.2 Placing SGTS in service manually, or having the SGTS automatically start and not be a result of pre-planned evolution, may require notifications in accordance with Procedure OP-OC-106-101.

4.2.3 Turbine Building Exhaust Fan EF-1-7, and Radwaste Building Exhaust Fans EF-1-16 or EF-1-17, should be run to provide for adequate stack dilution of hydrogen, and allow for a minimum flow rate of 50 fps stack exit velocity.

4.2.4 SGTS should not be operated if SIGNIFICANT painting, burning or chemical releases have taken place in the Reactor Building in the past 12 hours.

4.2.4.1 SIGNIFICANT releases are not produced by the following activities:

- touchup painting (1 pint per 8-hour shift or less) with solvent based paint (e.g., Conlux Enamelite, etc.)
- painting with latex paint
- grinding
- heat shrinking
- soldering
- welding processes such as
  - tig
  - stick (with two welders or less using ≤ 1/8 inch electrode)
  - solvent welding/bonding (on ≤ 2 inch pipe)
  - oxy-acetylene (on unpainted steel)

From: Gilbert Johnson
To: jlcuster@amergenenergy.com
Date: 5/7/04 7:42AM
Subject: Re: Requested information

For Q-23 since there is no procedural guidance to start SGTS how can we assume the SRO will direct the operator to do so. Would we expect the SRO to invoke 10 CFR 50.54X?

>>> <jlcuster@amergenenergy.com> 05/06/04 07:36PM >>>
Gil,

Attached please find the updated information you requested. I have gone through and formatted these responses in your requested format, to ensure a clear understanding of the chronology and the comments are contained within the responses.

I am including some additional technical information with this response, as requested. It's been a long day, and I won't be surprised if I forgot to include something you may need, but I'll take care of that in the morning when I can take a fresh look at this.

If you have any questions, please let me know.

Jeff

(See attached file: NRC exam question addenda.doc)(See attached file: c8h rap.DOC)(See attached file: 6254002 tvt surveillances.DOC)

4.0 MANUAL STARTUP OF THE STANDBY GAS TREATMENT SYSTEM

4.1 Prerequisites

4.1.1 System must be in Standby Readiness in accordance with Section 3.0 of this Procedure. [ ]

4.1.2 RadPro has been notified the SGTS will be placed in service and normal Reactor Building ventilation may be secured. [ ]

4.2 Precautions and Limitations

4.2.1 Precautions and Limitations 3.2.3 to 3.2.5 are applicable.

4.2.2 Placing SGTS in service manually, or having the SGTS automatically start and not be a result of pre-planned evolution, may require notifications in accordance with Procedure OP-OC-106-101.

4.2.3 Turbine Building Exhaust Fan EF-1-7, and Radwaste Building Exhaust Fans EF-1-16 or EF-1-17, should be run to provide for adequate stack dilution of hydrogen, and allow for a minimum flow rate of 50 fps stack exit velocity.

4.2.4 SGTS should not be operated if SIGNIFICANT painting, burning or chemical releases have taken place in the Reactor Building in the past 12 hours.

4.2.4.1 SIGNIFICANT releases are not produced by the following activities:

- touchup painting (1 pint per 8-hour shift or less) with solvent based paint (e.g., Conlux Enamelite, etc.)
- painting with latex paint
- grinding
- heat shrinking
- soldering
- welding processes such as
  - tig
  - stick (with two welders or less using ≤ 1/8 inch electrode)
  - solvent welding/bonding (on ≤ 2 inch pipe)
  - oxy-acetylene (on unpainted steel)

4.2.4.2 SIGNIFICANT releases are produced by the following activities:

- painting with solvent based paint (e.g., Conlux Enamelite, etc.) in amounts greater than 1 pint.
- welding processes such as
  - mig
  - arc gouging/cutting
  - stick (with more than two welders or > 1/8 inch electrode)
  - solvent welding/bonding (on > 2 inch pipe)
  - oxy-acetylene welding (on painted steel)
  - cad
- cleaning with vaporizing solvents (solvents, cleaning and neutralizing chemicals or any other organic producing material can affect SBGTS).
- chemical paint strippers

4.2.5 Truck ventilation hose use and engine operation (RB 23') shall be terminated immediately after receiving a Reactor Building ventilation isolation signal or prior to manual initiation of the SGTS. Exhaust fumes may be harmful to SGTS charcoal beds.

4.2.6 The system engineer is responsible to track SGTS run-time hours to assure compliance with Technical Specification 4.5.H.1.a. This tracking is dependent on accurate Control Room Log entries regarding STARTS and STOPS of each SGTS.

4.3 Manual Startup of Standby Gas Treatment System I

4.3.1 IF water evaporator in CRD rebuild room is operating,

THEN **SECURE** water evaporator in accordance with Procedure 358. [ ]

4.3.2 IF truck ventilation hose for the Reactor Building railroad airlock is in use,

THEN **SECURE** use and disconnect hose from truck.

4.3.3 IF SGTS I is operable,

THEN **CONFIRM** STANDBY GAS SELECT switch to SYS 1 (Panel 11R). (This will make SGTS I the preferential system) [ ]

4.3.4 **START** Exhaust Fan EF-1-8 by placing control switch to HAND position (Panel 11R). [ ]

4.3.5 **VERIFY** the following (Panel 11R):

- Exhaust Fan EF-1-8..... starts [ ]
- Inlet valve V-28-23.....opens [ ]
- Orifice valve V-28-24 .....opens [ ]
- Outlet valve V-28-26 .....opens [ ]

4.3.6 AFTER SGTS I flow is established,

THEN **VERIFY** the following (Panel 11R):

- SGTS I orifice valve V-28-24..... closes [ ]
- SGTS II orifice valve V-28-28 .....opens [ ]

4.3.7 **PLACE** SGTS Crosstie valve V-28-48 control switch to CLOSE and **VERIFY** green CLOSE indication is illuminated (Panel 11R). [ ]

4.3.8 **SHUTDOWN** Reactor Building Ventilation System in accordance with Procedure 329, if determined necessary by the OS. [ ]

4.4 Manual Startup of Standby Gas Treatment System II

4.4.1 IF water evaporator in the CRD rebuild room is operating,

THEN **SECURE** water evaporator in accordance with Procedure 358. [ ]

4.4.2 IF truck ventilation hose for the Reactor Building railroad airlock is in use,

THEN **SECURE** use and disconnect hose from truck.

4.4.3 IF SGTS II is operable,

THEN **CONFIRM** STANDBY GAS SELECT switch to SYS 2 (Panel 11R). (This will make SGTS II the preferential system) [ ]

4.4.4 **START** Exhaust Fan EF-1-9 by placing control switch to HAND (Panel 11R). [ ]

4.4.5 **VERIFY** the following (Panel 11R):

- Exhaust Fan EF-1-9..... starts [ ]
- Inlet valve V-28-27.....opens [ ]
- Orifice valve V-28-28 .....opens [ ]
- Outlet valve V-28-30.....opens [ ]

4.4.6 AFTER SGTS II flow is established,

THEN **VERIFY** the following (Panel 11R):

- SGTS II orifice valve V-28-28..... closes [ ]
- SGTS I orifice valve V-28-24 .....opens [ ]

4.4.7 **PLACE** SGTS Crosstie valve V-28-48 control switch to CLOSE and **VERIFY** green CLOSE indication is illuminated (Panel 11R). [ ]

4.4.8 **SHUTDOWN** Reactor Building Ventilation System in accordance with Procedure 329, if determined necessary by the OS. [ ]

APPENDIX 2

Category T "Emergency Director's Judgement"

(T) Condition Applicability	*All Plant Conditions.*
Basis	***Judgment for events not covered specifically in the EALs could apply to any plant condition.***
Classification	Unusual Event, Alert, Site Area Emergency
EAL's	Unusual Event Whenever plant conditions are in progress or have occurred which may indicate a potential degradation of the level of safety of the plant, as judged by the Shift Supervisor/Emergency Director.

NOTE

In exercising the judgement as to the need for declaring an Unusual Event, uncertainty concerning the Safety Status of the plant, the length of time the uncertainty exists and the prospects for resolution of ambiguities in a reasonable time period is sufficient basis for declaring an Unusual Event.

Alert
Whenever plant conditions are in progress or have occurred which may involve an actual or potential substantial degradation of the level of safety of the plant, as judged by the Shift Supervisor/Emergency Director.

NOTE

In exercising the judgement as to the need for declaring an Alert, uncertainty concerning the safety status of the plant, the length of time the uncertainty exists the prospects for resolution of ambiguities beyond a reasonable time period and the potential of the level of safety of the plant is sufficient basis for declaring an Alert.

Site Area Emergency
Whenever plant conditions are in progress or have occurred which may involve actual or likely major failures of plant functions needed for the protection of the public, as judged by the Shift Supervisor/Emergency Director.

OYSTER CREEK CONDUCT OF OPERATIONS

1. PURPOSE

1.1. To provide in combination with the Exelon Conduct of Operations Manual (OP-AA series of procedures) the general rules, policies and instructions pertaining to the overall operation of the Oyster Creek Facility.

2. TERMS AND DEFINITIONS

2.1. Site - the area within the security fence, also known as the Protected Area. Personnel in areas covered by the site paging system or in radio communication with the Control Room may go to the following areas and still be considered on site: any location within a five minute walk of a security access point allowing prompt reentry. Personnel with a vehicle and in radio communication with the control room may go to the following areas and still be considered on site: Fire Pond, Switchyard, Low Level Radwaste Storage Facility, North Yard Domestic Water House, or area between the canals and west of Route 9.

2.2. Operations Supervisor (OS) – SRO Required Position (SM, US, FS)

SM – Shift Manager
US – Unit Supervisor
FS – Field Superviosr

3. RESPONSIBILITIES

4. MAIN BODY

4.1 Defeating/Bypassing Interlocks and Engineered Safeguards

4.1.1 Operations Department is obligated by law to adhere to all requirements of the Operating License, Technical Specifications, Federal Regulations and other criteria established by the NRC to ensure safe operation of the plant.

4.1.2 Plant protective functions and engineered safeguards (including actuation signals) that are required to be operable shall only be bypassed when the following conditions are satisfied (**CM-2**):

1. The evolution is controlled by an approved plant procedure.
2. The Shift Manager has reviewed the applicability of the procedure with respect to current plant conditions and has granted permission or specifically directed the use of the procedure.

4.2 Limiting Conditions For Operation

4.2.1 The plant shall be operated and maintained in accordance with the requirements specified in the Operating License, Design Basis, Technical Specifications and the NJPDES Permit at all times.

4.2.2 No individual shall knowingly exceed a Limiting Condition for Operation as defined in the plant's Operating License and Technical Specifications and/or the NJPDES Permit except as provided for in specific Emergency Operating Procedures or as authorized in 10 CFR 50.54(x).

4.2.3 The following criteria shall be used for determining the time intervals in which the actions required by the plant's Technical Specifications must be completed/performed:

TIME INTERVAL SPECIFIED	CRITERIA
"Hourly" or "Daily" "Demonstrated Daily"	The required actions must be performed during each subsequent time period (i.e., an hourly tour performed any time between 0000 and 0059 must again be performed prior to 0159, a daily sample must be taken by 2359 hours on the next day).
"Not-to-Exceed" "Every X Hours" "Any X Day Period "Within X Days" "Within X Hours"	The required actions must be performed and completed within the specified time interval to the exact minute (i.e., if an event occurs at 0000 on X/1/XX and the corrective actions must be completed "within 7 days", then the time interval will expire at 0000 on X/8/XX).
Technical Specification 3.0.A (COLD SHUTDOWN within the following 30 hours)	A continuous and controlled reactor shutdown must be commenced within 60 minutes of the Licensed Operations Supervisor's determination that this technical specification applies.
"the unit shall be placed in COLD SHUTDOWN within the following 30 hours" "the reactor shall be in COLD SHUTDOWN within 24 hours"	Initiation of a plant shutdown does NOT have to be commenced within one hour. The minimum initiation time when a plant shutdown should be commenced is derived by using the ACTION statement completion time and subtracting the appropriate allotted plant maneuvering time. A minimum of four (4) hours (or longer, to meet environmental requirements) shall be allotted to maneuver from POWER OPERATION to SHUTDOWN CONDITION (or longer, to meet environmental requirements). A minimum of eight (8) hours shall be allotted to maneuver from the SHUTDOWN CONDITION to COLD SHUTDOWN.
"the reactor shall be placed in the cold shutdown condition" (no time interval specified)	The reactor shall be placed in a cold shutdown condition in 30 hours. The minimum time of initiation is as described above.

4.2.4 The following criteria shall be used for determining when a component or system shall be considered "inoperable" or "operable" for purposes of satisfying the requirements of the Technical Specifications:

4.2.4.1 A component or system shall be considered inoperable based on the time that the information was originally received or the event occurred. (i.e., An event occurs at 0000 hours on X/1/XX, which causes the Operations Supervisor to question the component's or system's operability.

A test or engineering evaluation completed at 0800 on X/1/XX confirms the component's or system's inoperability. The component or system is to be considered inoperable at 0000 on X/1/XX and the appropriate time interval started from that time).

4.2.4.2 A component or system shall be considered operable from the time that its surveillance is satisfactorily completed and not upon completion of the surveillance's reviews or closeout of the job order provided that no discrepancies that impact operability are identified during these reviews. If any discrepancies occur that impact operability, then the inoperability period shall continue from the original failure date and time.

4.2.5 **If** through routine log readings, plant indications, alarms, or surveillances, there is evidence that a situation is developing which could lead to exceeding a Technical Specification Limiting Condition for Operation,

then the individual/operator discovering the situation shall immediately notify the Operations Supervisor.

4.2.6 **If** it is discovered that a Technical Specification Limiting Condition for Operation could be exceeded or has been exceeded,

then the Operations Supervisor shall ensure that the following actions are implemented immediately:

- Initiate the required actions to rectify the situation
- Use the Technical Specifications and the criteria contained in Steps 4.2.3 and 4.2.4 for determining the appropriate time interval for rectifying the situation
- Request an additional SRO Licensed Operator independently verify the Technical Specification requirements.
- Ensure that the circumstances surrounding the occurrence are adequately documented in the Control Room Log
- Notify Operations Management
- Issue a CAP in accordance with Procedure LS-OC-125.

4.2.7 **If** at any time during the time interval (LCO clock) it is determined that the situation can not be rectified prior to expiration of the allotted time interval,

then the time interval shall be considered expired at the time of the determination and a controlled shutdown commenced.

> NOTE
>
> The rate of power decrease may be subsequently changed (increased or decreased) dependent on the initial power level and the ability to correct the initiating failure in a timely manner.

4.2.8 **If** a plant shutdown is commenced as a result of exceeding a Technical Specification Limiting Condition for Operation,

then the initial power decrease shall be at least 20 MWe per hour.

4.2.9 **When** a Tech Spec LCO requires a system or component to be verified as being operable,

then that operability verification shall be performed in accordance with OP-OC-100-1003.

and the operability verification will be independently verified by a separate SRO Licensed Operator.

4.2.10 **If** a condition exists that is administrative in nature, i.e. requires a report or tracking only.

then document the requirement in the Control Room Log as an LCO and select 'tracking LCO' option.

4.3 <u>Station Operating Complement</u>

4.3.1 Sufficient qualified personnel to fill the following positions shall be on site at all times, except as specified. The Shift Coverage Log, OP-OC-100-1001, shall be completed to document compliance.

4.3.1.1 A Shift Manager (SM), who shall not be assigned to the Fire Brigade.

4.3.1.2 A Unit Supervisor (US) (SRO licensed) as described in Procedure OP-AA-101-111, however, this position may be vacant with the concurrence of the Senior Manager-Operations when there is no fuel in the reactor vessel or the mode switch is in the SHUTDOWN or REFUEL position.

4.3.1.3 A Field Supervisor as described in Procedure OP-AA-101-111.

4.3.1.4 A Shift Technical Advisor (STA). This position may be filled by an on shift SRO if qualified.

4.3.1.4.1 **If** the Shift Manager (SM) or Unit Supervisor (US) is serving as the STA,

then another SRO shall assist the STA as the Incident Assessor (IA) during unexpected conditions and transients.

4.3.1.4.2 The STA position may be vacant when reactor temperature is less than 212°F and the reactor mode switch is in the SHUTDOWN or REFUEL position.

4.3.1.5 Two (2) Reactor Operators (RO). The following guidance applies:

A. Under normal circumstances, two ROs should remain in the Control Room.

B. Additional ROs called in to support operations may count this time towards proficiency only if fulfilling RO duties in accordance with OP-AA-105-102.

4.3.1.6 Three (3) Operators qualified to at least the Non-License Operation (NLO) level.

4.3.1.6.1 Two (2) Operators shall be qualified such that the area responsibilities of the Intake, Reactor Building, and Turbine Building shall be adequately covered.

4.3.1.6.2 One Operator, qualified as RWO should be in the Radwaste Control Room when processing radwaste. This NLO is permitted to leave the Radwaste Control Room for short periods of time to perform Facility tours, equipment manipulations, etc

4.3.1.7 Fire Brigade, consisting of one leader and at least four additional members. Departments providing Fire Brigade members will ensure their qualifications remain current in accordance with OP-AA-201-205. Personnel on the Fire Brigade may fill other positions in this section, with the following exceptions:

NOTE OSC personnel may be assigned to the Fire Brigade.

- The minimum shift personnel necessary for safe shutdown of the plant.
- Any personnel required for other essential functions during a fire emergency.
- Personnel are recommended to remain within the protected area. Exceptions are noted in procedure 101.2.

4.3.1.8 Shutdown Crew consisting of at least four (4) members qualified in Procedure 2000-ABN-3200.30. Personnel filling other positions, with the exception of the Fire Brigade, may be assigned to the Shutdown Crew.

- The Shutdown Crew is not required when the reactor temperature is less than 212°F and the mode switch is in the SHUTDOWN or REFUEL position.

4.3.1.9 Two (2) Radiological Protection Technicians with at least one being a Senior Radiological Protection Technician.

4.3.1.10 One Chemistry Technician.

4.3.1.11 A Radiological Assessment Coordinator qualified individual (RAC)

4.3.1.12 A Maintenance Department Supervisor. An Operations Supervisor (OS), may be substituted for this position. This OS can also be assigned to the fire brigade but cannot be the only OS assigned to the shift.

4.3.1.13 Two (2) Maintenance Technicians with one being a senior maintenance technician. An NLO, not already fulfilling an Emergency Plan position, may be substituted for a maintenance technician.

4.3.1.14 Two (2) qualified FIRST AID personnel. These personnel are required by the E-PLAN and may be personnel filling collateral E-PLAN staffing positions.

4.3.2 The following minimum number of personnel shall be in the Main Control Room at all times, except as specified:

4.3.2.1 One SRO licensed individual (Shift Manager or Operations Supervisor). This individual may leave the Control Room when the reactor mode switch is in SHUTDOWN or REFUEL position and core alterations are not in progress.

4.3.2.2 Prior to leaving the Main Control Room, Operations Supervisors (SRO licensed) must conduct a face-to-face turnover in order to ensure that one SRO licensed individual is in the Control Room as required. The turnover shall include transfer of the "Control Room SRO" badge to the remaining SRO (**CM-1**).

4.3.2.3 Two Licensed Reactor Operators. One of the two may leave the Control Room when reactor startups, shutdowns and other evolutions involving planned control rod manipulations are not in progress.

4.3.3 The responsible Operations Supervisor will determine the alertness and attentiveness of all operators assigned to safety-related duties. If, in the opinion of the Operations Supervisor, an operator does not possess these capabilities, they shall be relieved or reassigned to non-safety related functions.

4.3.4 Overtime shall be limited in accordance with Procedure LS-AA-119.

4.3.5 The following License requirements shall be observed:

- NRC SRO and RO license requirements as stated in Procedure OP-AA-101-111.
- Shift Manager shall have a State of New Jersey Stationary Engineers License, Blue Seal or higher.
- NLO and RO assigned to NLO duties shall have a Boiler Operator, Fireman, or Engineers License from the State of New Jersey, Black Seal or higher, or application submitted to the state to take the test.
- **If** the NLO or RO does not have a black seal or higher,

  then he/she shall not operate the Heating Steam Boilers unless directly supervised by a person holding a Blue seal or higher.

4.4 Operations Supervisor Signature Authority and Accountability

4.4.1 The SM may delegate signature/initial responsibility to a Operations Supervisor on all documents requiring his signature except where Operations Management signatures are required.

4.4.2 When a signature is specifically required, an initial may not be substituted.

4.4.3 A signature or initials at the end of a completed procedure or document signifies that the individual has reviewed the procedure and is attesting to its accuracy (allowing for any properly documented discrepancies).

4.4.4 The Senior Manager, Operations shall designate the following, via an issued memorandum:

1. PM tasks and their related job orders that are exempt from OS work start and complete signatures.
2. Surveillances, which are exempt from OS start permission signatures.

4.5 Control of Out of Service Plant Equipment and Components

NOTE The intent of this section is to provide Operations Management performance expectations with regard to responding to out of service (broken) plant equipment and components and to provide a method of evaluating and controlling out of service recorders and alarms.

4.5.1 **When** a plant component is determined to be broken or degraded,

then perform the following, as applicable,

1. Review Technical Specifications and confirm compliance.
2. Review Procedure WC-AA-101, On-Line Maintenance Risk Management, for changes in risk level and required actions.
3. Submit an action request to complete repairs.
4. Remove the component from service in accordance with Procedure OP-MA-109-101, Clearance and Tagging, as required.
5. Submit a CAP to document the deficiency and evaluate reportability and operability.
6. Evaluate need for compensatory actions. Compensatory actions shall be documented on the Main Control Room Turnover Checklist, OP-OC-100-1002.

> NOTE
>
> An operator workaround/challenge is defined in Procedure OP-AA-102-103, Operator Workaround Program.

7. Submit the deficiency into the operator workaround/challenge database.

4.5.2

> NOTE
>
> Removing a operable recorder from service or intentionally defeating an alarm circuit is controlled in accordance with CC-AA-112, Temporary Configuration Changes.

4.5.2.1 When a recorder or alarm circuit becomes inoperable, the Operations Supervisor (OS) shall evaluate the condition in accordance with OP-OC-100-1006.

4.5.2.2 **When** the recorder and/or alarm circuit is returned to service and declared operable,

then complete the following:

1. Remove associated compensatory actions from the Main Control Room Turnover Checklist, OP-OC-100-1002.
2. Remove alternate monitoring equipment if installed.
3. Complete and forward Document OP-OC-100-1006 to IRMC.

4.6 Response to Indications of Tampering, Vandalism or Malicious Mischief

4.6.1 General Requirements

- All operations personnel should be alert for indications of deliberate or malicious tampering. Sabotage includes intentional and willful attempts and actual occurrences to destroy or physically damage a facility licensed under the Atomic Energy Act, or nuclear fuel for or from such a facility (regardless of fuel location.)

- Indications of tampering include, but are not limited to, events involving misaligned valves or circuit breakers, cut wires or cables and foreign objects in machinery, tanks or reservoirs. Tampering should be considered the cause for an incident until another cause has been confirmed.

4.6.2 Procedure

4.6.2.1 Upon detection of abnormal presence or activity of persons or vehicles within the protected area, notify the On-Duty Security Supervisor and the Shift Manager.

> NOTE
>
> Unless it is immediately necessary to return the effected component to its proper position, misaligned components and related evidence should not be disturbed until the Security Department has completed the initial investigation.

4.6.2.2 **If** an indication of tampering is reported to the Control Room,

then Perform the following:

1. Dispatch an operator to check equipment status and inspect the area for the following:
   - unusual noises
   - abnormal temperatures
   - other abnormalities

> NOTE
>
> Security support may include sealing off area pending investigation.

2. Notify the On-Duty Security Supervisor and request security support.

3. Confirm system operability and technical specification requirements as applicable.

4. Place alternate systems/trains in service as required.

4.6.2.3 Survey Control Room indications for evidence of system malfunctions. Consider dispatching Operators to perform general inspection of other safety related systems not known to be tampered with.

4.6.2.4 Consult OP-OC-106-101 for notification requirements.

5.0 MAIN CONTROL ROOM CONDUCT

5.1 Licensed Operator Authorities

5.1.1 The responsible Operations Supervisor (SRO licensed) has the duty and authority to shut down the reactor or initiate an engineered safeguard system under the following circumstances:

- When instructed to do so by the Plant Management.
- When required by approved Station Procedures.

> NOTE
>
> Indicators and alarms are to be believed unless it is verified by other means (i.e., another indicator or direct observation) to be false.

- When operating parameters should have initiated a scram and no scram occurred.
- When operating parameters should have initiated a safeguard system and no initiation occurred.
- When in their judgment a situation exists which jeopardizes or threatens to jeopardize public or plant safety.
- When verified, operating parameters are trending such that an automatic scram is imminent or inevitable.

5.1.2 On-shift Reactor Operators have the duty and authority to shut down the reactor or initiate an engineered safeguard system under the following circumstances:

- When instructed to do so by an Operations Supervisor (SRO licensed).
- When required by approved Station Procedures.

> NOTE
>
> Indicators and alarms are to be believed unless it is verified by other means (i.e., another indicator or direct observation) to be false.

- When operating parameters should have initiated a scram and no scram occurred.
- When operating parameters should have initiated a safeguard system and no initiation occurred.
- When in their judgement a situation exists which jeopardizes or threatens to jeopardize public or plant safety.

5.1.3 The SM may designate concurrent verification in lieu of independent verification for those procedural steps requiring independent verification in accordance with HU-AA-101

5.2 Logs and Record Keeping

5.2.1 Logs are legal records and if any log readings are missed, the reason shall be stated on the log.

5.2.2 Data on logs or Tour Sheets which does not meet acceptance criteria or indicates some other deviation from satisfactory performance shall be clearly indicated and shall be circled with an asterisk and a clarifying note in the Comments section.

5.2.3 During power operations, the following logs shall be maintained by Plant Operations:

Main Plant

- Control Room Tour (20.70.01.13)
- Electronic Control Room Log (20.70.02.10)
- Turbine Building Tour Sheet (20.70.01.03)
- Intake Area Tour Sheet (20.70.01.03)
- Reactor Building/AOG Tour Sheet (20.70.01.02)
- Transmission Line Report (20.70.02.06)
- Control Room Alarm Sheets (20.70.02.03)
- Control Rod Status Sheet (20.70.03.07)
- Tech. Spec. Log

- Area Temperature Monitor Log (20.70.02.09)
- Area and Effluent Radiation Monitor Log (20.70.02.07)
- AOG Area Radiation Monitor Log (20.70.04.05.01)
- Radwaste Facility
- Radwaste Tour (20.70.01.15)
- Electronic NRW Control Room Log (20.70.02.10)
- Radwaste Area Radiation Monitor Log (20.70.04.01.08)

5.2.4 **When** the reactor is Shutdown,

then the following logs shall be obtained using 'Mode 2' of the Hand Held Computer.

- Control Room Tour (20.70.01.13)

5.2.5 When switching from Operation logs to the Shutdown Log and vice-versa, key log parameters (i.e., Stack gas activity) shall be recorded, as a minimum, on an hourly basis to comply with the Technical Specifications.

- The initial set of readings on the log being implemented shall be taken within 1 hour of the log being substituted.

5.2.6 Periodic log readings shall be taken at the frequency and time designated on the log unless otherwise designated in writing by Operations Management.

5.2.7 **If** work volume in the Control Room (radwaste or main) becomes excessive (i.e., testing, major evolution, outages, etc.) and log readings cannot be taken when required,

then perform the following:

- Notify the responsible Operations Supervisor and receive concurrence/approval.
- Note in the comments section of log reason for missed readings.
- At soonest convenience, monitor logged parameters for adverse trends and applicable limits.

5.2.8 Primary and Secondary sources for Control Room records.

The table below provides guidance for which instruments should be used as the primary and secondary sources for Main Control Room records.

Reading/Parameter	Primary Source	Secondary Source
Generator Output (Mw electric gross)	Digital Watt Hour Meter Panel 12R	Panel 8F/9F Digital
Reactive Load MVAR	Recorder Panel 12XR	Panel 8F/9F Meter
Generator Volts	Recorder Panel 12XR	Panel 8F/9F Meter
Drywell Bulk Temp.	Plant Computer	Manual Calculation
Total Recirc Flow	Recorder Panel 3F	Plant Computer (Heat Balance Display)
Feedwater Temp.	Recorder Panel 5F/6F	Plant Computer (Heat Balance Display)
Drywell Pressure	Recorder Panel 12XR	Panel 4F Digital
Drywell Cooler Temp.	Plant Computer	1A55 Recorder Panel 8R
Torus Pressure	Recorder Panel 12XR	Panel 4F Digital
Torus Level	Digital LT-37/ LT-38 Panel 1F/2F	IP10A/B Panel 11F
Reactor Pressure	Narrow Range Rec. Panel 5F/6F	Panel 4F Digital
Reactor Level	Recorder Panel 5F/6F	Yarways Panel 5F/6F
Hotwell Level	'B' Hotwell Panel 5F/6F	'A' Hotwell Panel 5F/6F
RBCCW Temperature	Recorder IA55 TE-108, PT 45 Panel 8R	Recorder 13R-6 (206) TE-43 PT 17

5.3 Use of the Plant Computer System (PCS)

5.3.1 Operation of equipment should rely on installed indicators before the plant computer, where duplicate or redundant, information is available.

5.3.2 SPDS Alarms should be responded to in similar fashion as plant alarms or annunciators.

5.3.3 The PCS alarm screen should be reviewed at least once per shift.

5.3.3.1 Alarming parameters should be checked against installed indications for validity.

5.3.3.1 Operators should use their knowledge, judgment and approved procedures in responding to alarms.

5.3.4 Manual adjustments to the Plant Computer System heat balance calculation, such as removing the Cleanup System thermal power contribution when the system is out of service, shall not normally be allowed.

5.3.5 The Shift Manager shall approve all heat balance adjustments.

5.4 Reactor Mode Switch Key

5.4.1 Whenever the Reactor Mode Switch is required to be locked in any mode, the key shall be removed and placed under the control of the Operations Supervisor in the Controlled Key Locker.

5.4.2 Issuance of the key shall be granted only with approval of the Operations Supervisor.

6.0 REFERENCES

6.1 Procedures

- 101.2, Fire Protection Program
- 203, Plant Shutdown
- 312.9, Primary Containment Control
- 312.11, Nitrogen System and Containment Atmosphere Control
- 2000-OPS-3024.09, Drywell Cooling System - Diagnostic & Restorations Actions
- 2000-ABN-3200.30, Control Room Evacuation
- HU-AA-104-101, Procedure Use and Adherence
- LS-AA-119, Overtime Contols
- LS-OC-125, Corrective Action Process
- OP-AA-101-111, Roles and Responsibilities of On-Shift Personnel
- OP-AA-102-103, Operator Workaround Program
- OP-AA-105-102, NRC Active License Maintenance
- OP-AA-201-205, Fire Brigade Qualification
- OP-MA-109-101, Clearance and Tagging
- OP-OC-100-1001, Shift coveraqge log
- OP-OC-100-1002, Main Control Room Turnover Checklist (Operating)
- OP-OC-100-1003, Redundant system operability verification checksheet.
- OP-OC-100-1004, Main Control Room Turnover Checklist (Shutdown)
- OP-OC-100-1005, Shift Training Brief.
- OP-OC-100-1006, Out of service recorder and alarm circuit evaluation.
- OP-OC-106-101, Significant Event Notification and Reporting
- WC-AA-101, On-Line Work Control Process
- WC-AA-101-1001, Work Screening and Processing

6.2 Other

- 10 CFR 50.54, Code of Federal Regulations
- Operating License/and Technical Specifications
- Licensee Event Report 95-004, Technical Specification Violation due to Absence of an SRO in the Control Room
- NJPDES Permit
- UFSAR

6.3 Commitments

- CM-1, LER 95-004, Step 4.3.2.2
- CM-2, INPO SER 4-93, Reactor Coolant Pressure Transients Caused by Failed Open Pressurizer Spray Valves, Step 4.1.2.

7. ATTACHMENTS

None.

NOTE

The third Condensate and Feedwater pumps should be removed from service when the plant is expected to remain at reduced power for more than 4 hours to mimimize pump vibrations.

Securing the Condensate pump that is drawing the lowest amperage will minimize the potential for pump cavitation (due to deadheading the weakest pump)

At low power, two Condensate/Feed pump operation will improve Main Feedwater Regulating Valve (MFRV) responsiveness

6.3.13 WHEN reactor power reaches approximately 70% power,

AND it is desired to remove a Condensate and/or Feedwater Pump from service,

THEN **PERFORM** the following:

1. **SECURE** one (1) Feedwater Pump and its *associated string in accordance with Procedure 317*, Feedwater System (Feed Pumps to Reactor Vessel). [ ]
2. **SECURE** one (1) Condensate Pump in accordance with Procedure 316, Condensate System. [ ]

6.3.14 WHEN generator load is below 400 MWe, and prior to reaching 300 MWe.

THEN **VERIFY** the second stage reheaters automatically are removed from service or **REMOVE** them from service manually in accordance with Procedure 318, Main Steam System and Reheat Steam. [ ]

6.3.15 WHEN reactor power reaches approximately 40% power,

THEN **REMOVE** the AOG System from service in accordance with Procedure 350.1, Augmented Off Gas System Operation. [ ]

Exelon Nuclear

Course/Program:	NUCLEAR PLANT OPERATOR INITIAL	Module/LP ID:	2611PGD-2621
Title:	©SECONDARY CONTAINMENT AND SGTS	Course Code:	828.0.0042
Author:	Dave Fawcett	Revision/Date:	08-06/18/03
Prerequisites:		Revision By:	N. Boulware
		Est. Teach Time:	~4 (requal) ~8 (initial)

Qualified Nuclear Engineer Review (If applicable):		Date:	
Training Supervision Review:		Date:	
Line Management Approval:		Date:	

OBJECTIVES

From memory unless otherwise indicated, and in accordance with the lesson plan, the trainee shall be able to:

Objective #	Objective Description	Pg. #
A (01/04)10435	Given plant operating conditions, describe or explain the purpose(s)/function(s) of the system and its components.	2,7,19, 22
B. (01/04)10437	Without the aid of references, draw and label a sketch of the system flowpaths, including major equipment (valves, pumps, instrumentation, etc.) and showing interconnections with other systems.	3,20
C. (01/04)10438	Using the system P&IDs, locate each of the system components and explain its operation and limitations within the system.	21,22
D. (01/04)10439	Given the system logic/electrical drawings, describe the system auto initiation signals, setpoints and expected system response including power loss or failed components.	24,25, 27,29
E. (01/04)10441	Given the system logic/electrical drawings, describe the system trip signals, setpoints and expected system response including power loss or failed components.	10,11, 17
F. (01/04)10445	Given a set of system indications or data, evaluate and interpret them to determine limits, trends and system status.	13

© Copyright 2003 by Exelon Nuclear, All Rights Reserved. Permission for reproduction and use is reserved for Exelon Nuclear. (Any other use or reproduction is expressly prohibited without the express permission of Exelon Nuclear.)

Objective #	Objective Description	Pg. #
G. (01/04)10446	Identify and explain system operating controls / indications under all plant operating conditions.	9,23, 24
H. (01/04)10447	Given normal operating procedures and documents for the system, describe or interpret the procedural steps.	15,17 28,31
I. (01/04)10449	State the function and interpretation of system alarms, alone and in combination, as applicable in accordance with the system RAPS.	12,27
J. (01)10451	Given Technical Specifications, identify and explain associated actions for each section of the Technical Specifications relating to this system including personnel allocation and equipment operation.	16,30
K. (01/04)10452	Identify and explain each surveillance required for this system including personnel allocation and equipment operation.	16,29
L. (01/04)10453	Explain or describe how this system is interrelated with other plant systems.	13,27

Content/Skills	Activities/Notes
1) Raise the temperature of the air supply to the charcoal bed absorbers.	**Show Slides 91-96**
2) Start automatically when the respective train fan starts.	
3) Thermostatically controlled to reduce the relative humidity of the air supply to absorber to less than 70% while the train is in operation.	
4) During operating periods they are designed to raise absorber and downstream component temperature to 10°F above the dew point of the air inside the SGTS.	
e. Absolute Filters F-1-7, 9, 10, 12	**Objective C**
1) Two (2) high efficiency filters are located in each train.	
a) One (1) on the discharge of the EHC and the other located on the discharge of the charcoal bed.	
2) Fine mesh mechanical filters able to remove 99.9% of the particulates in the air flow .3 microns in diameter.	
3) First filter removes incoming particulates and the second filter removes particulates released from the charcoal beds and charcoal fines.	
f. Charcoal absorbers F-1-8, 11 and Strip Heaters	**Objective C**
1) Provided to remove iodine from the air flow and is designed to accomplish a 99.9% removal.	
a) Iodine is adsorbed by the charcoal and delayed to allow decay.	**Objective A**
2) Cooled after use by air flow from the restricting orifices and through the cross-tie.	**Show Slides 97-98**
a) Under post-accident conditions cooling of the adsorbers would be required to remove decay heat.	
3) Strip heater raise the temperature of the charcoal bed adsorber to prevent condensation during standby periods.	

e) Hi Refuel Floor Rad - 50 mR/hr w/2 min. TD

b. Exhaust Fans EF-1-8, 9

1) Controlled by HAND/OFF/AUTO switches on 11R.

2) In HAND the fan starts and the train valves automatically line up for operation.

a) Low Flow alarm is inoperative while in HAND.

Discuss CAP 02001-1589 Failed to return switch to AUTO position. HU-AA-104-101 – Procedure Adherence

3) Returning the switch to OFF stops the fans and realigns the valves for standby service.

4) In AUTO, SGTS starts and the valves align for operation on any of the trip signals.

Objective D

a) In addition to the lead train the standby fan starts, and all valves except the cross-tie shift to a normal operating position.

b) When normal flow is sensed, the standby train will shutdown.

c) If the lead train fan trips, the standby train will take over and the cross-tie will remain open to cool the shutdown train through the orifice purge inlet.

On low flow swap over, the lead fan continues to run with the inlet/outlet dampers closed. This fan has to be manually shutdown.

c. Cross-tie V-28-48

1) Controlled by a CLOSE/AUTO switch on 11R.

2) In AUTO the cross-tie remains open when SGTS initiates and closes when normal flow is sensed in the lead train.

3) In CLOSE the valve shuts.

4) If the lead train trips after an auto initiation the cross-tie opens to provide cooling for the tripped train.

d. EHC-1-5, 6 and Strip Heaters

1) EHC-1-5, 6 are automatically energized when normal flow is sensed in the lead train.

2) Cycle automatically to maintain optimum running train temperatures for the removal of radioactive materials from the process flow.

QUESTION #25

Following a loss of offsite power, the crew has initiated EMG-3200.01A "RPV Control-No ATWS" and is at the step that specifies "Confirm the following sub-systems lined up for injection with pumps running".

Which of the following configurations of Core Spray annunciators **LIT** would confirm either Core Spray System 1 or Core Spray System 2 is lined up with pumps running?

A. SPARGER 1 DP HI, SYSTEM 1 FLOW PERMISSIVE, BSTR PUMP A/C OL

B. SPARGER 1 DP HI, SYSTEM 2 FLOW PERMISSIVE, BSTR PUMP A/C OL

C. SPARGER 2 DP HI, SYSTEM 2 FLOW PERMISSIVE, BSTR PUMP A/C OL

D. SPARGER 2 DP HI, SYSTEM 2 FLOW PERMISSIVE, BSTR PUMP B/D OL

ANSWER: B

Question 25: Oyster Creek's position

UFSAR sections 6.3.3.2.1 and 6.3.3.1.6 require the core spray injection line to be intact to meet ECCS design criteria. The design flow is through the injection line, to the ring headers and through the sparger nozzles to spray the top of the core inside the reactor vessel.

RAP B-5-e and B-5-f (sparger dp hi alarms), list the cause of the alarm as high differential pressure across the sparger nozzles due to Core Spray line break in the vessel annulus. With the alarm in, all core spray flow is diverted to the annulus.

Question 25 refers to a specific step within the Level Restoration procedure regarding confirmation of injection subsystem availability. That step in the EOPs does not address spray cooling effectiveness. It only addresses whether the listed injection subsystems can be relied upon to inject water into the vessel, not through the core spray sparger and, thus directly on top of the core. In the generic EPGs, spray cooling is not even addressed, since there is no confirmation of adequate core spray pattern following an accident. The EPGs only rely on core reflood in order to provide adequate core cooling. Adequate core cooling, as defined within the EPGs, is adequate heat removal to preclude cladding temperatures from exceeding 1500 degrees F, the threshold for cladding perforations.

Oyster Creek (BWR-2 design) has taken a deviation from the generic EPGs, due to the plant design. BWR-2 design will preclude the possibility of reflooding the core region, due to the recirculation piping penetrations in the vessel lower head. Since the BWR-2 cannot be reflooded to 2/3 core height (as in the BWR-3 through 6 product lines), we added an additional set of steps further on in the Level Restoration procedure that addresses adequate core spray cooling, per the plant design basis. In this particular case, the plant would have already been emergency depressurized, and all actions to restore and maintain water level above –30 inches would have been attempted. In the event level cannot be restored and maintained above –30 inches, even after all the mitigation strategies of Level Restoration have been exhausted, the Oyster Creek EOPs will direct one last effort to provide adequate core cooling by asking whether the core spray systems are injecting at design basis flows. At this point in the EOPs, we are taking credit for the plant design basis of limiting cladding temperature below 2200 deg. F, the threshold for accelerated zirc-water reaction. When the question of core spray injection at design basis flow is finally addressed, any problems with the core spray spargers would invalidate the affected core spray system, and the eventual outcome would direct exit from the EOPs and entry into the SAMGs.

The question stem does not address core spray operation at design basis flow (which is one of the last steps within Level Restoration.) The stem is asking about injection subsystem availability, which only addresses RPV vessel injection capability, not design basis core spray flow through the spray headers. Therefore, sparger dp concerns has no bearing on the answer to this question.

Based upon the above, all four answers were assessed without any regard to sparger dp alarms.

For the remaining information in the question, the key to determining which set of conditions will result in core spray flow is the Flow Permissive signal. Per RAP B-2-e and B-2-f (SYSTEM 1/2 FLOW PERMISSIVE), the following conditions must be met:

- Booster pump dp signal for the respective core spray system, **AND**
- Core spray main pump discharge pressure, **AND**
- RPV pressure less than 305 psig

Based upon these criteria, answers "A" and "D" CANNOT be correct, as the booster pump overload trip affects its system, and the booster pump dp signal will NOT be generated, thereby eliminating the flow permissive signal for that system. However, answers "B" and "C" are both correct, as the booster pump trip affects the other system, allowing the flow permissive alarm to be received and satisfying the question stem condition that "..sub-systems are lined up for injection with pumps running".

Therefore, answers "B" and "C" are correct.

Oyster Creek recommendation: Accept "B" and "C"

References: RAP B-2-e, SYSTEM 1 FLOW PERMISSIVE (sent previously)
RAP B-3-e, BSTR PUMP A/C OL (sent previously)
RAP B-5-e, SPARGER 1 DP HI (sent previously)
RAP B-2-f, SYSTEM 2 FLOW PERMISSIVE (sent previously)
RAP B-3-f, BSTR PUMP B/D OL (sent previously)
RAP B-5-f, SPARGER 2 DP HI (sent previously)
EMG-3200.01A, RPV Control – No ATWS, Level Restoration (sent previously)
EOP User's Guide, pp. 1A-25 and 1A-39 (sent previously)

SYSTEM 1 FLOW PERMISSIVE

CAUSES:	SETPOINTS:	ACTUATING DEVICES:
Booster pump differential pressure greater than 30.5/28.5 psid (RV40A/RV40C)	30.5 psid 28.5 psid	DPS RV40A or DPS RV40C
- AND -		- AND -
Core Spray pump discharge pressure greater than 100 psig	105 psig	PS RV29A or RV29C
- AND -		- AND -
Reactor pressure less than 305 psig	305 psig	RE17A or RE17B
NOTE: This alarm will activate only if all three conditions are met indicating that core spray should be injecting into the depressurized Rx core.		

Reference Drawings:

NU 5060E6003 Sh. 1 & 3
GU 3E-611-17-004 Sh. 1

CONFIRMATORY ACTIONS:

Check pump discharge pressures on Panel 1F/2F.

Check reactor pressure on Panel 4F.

AUTOMATIC ACTIONS:

Core Spray pumps discharge pressure greater than 105 psig allows start of booster pump. Failure of booster pump to develop a differential pressure greater than 30.5/28.5 psid (RV40A/RV40C) within 5 seconds, trips booster pump and starts alternate pump. Reactor pressure less than 305 psig permits opening of Core Spray isolation valves with system initiation. NOTE: The alternate booster pump will not start automatically unless failure of both primary booster pumps occur.

MANUAL CORRECTIVE ACTIONS:

If alarm sounds and all three conditions are not met, repair switches if defective.

SYSTEM 1
FLOW
PERMISSIVE

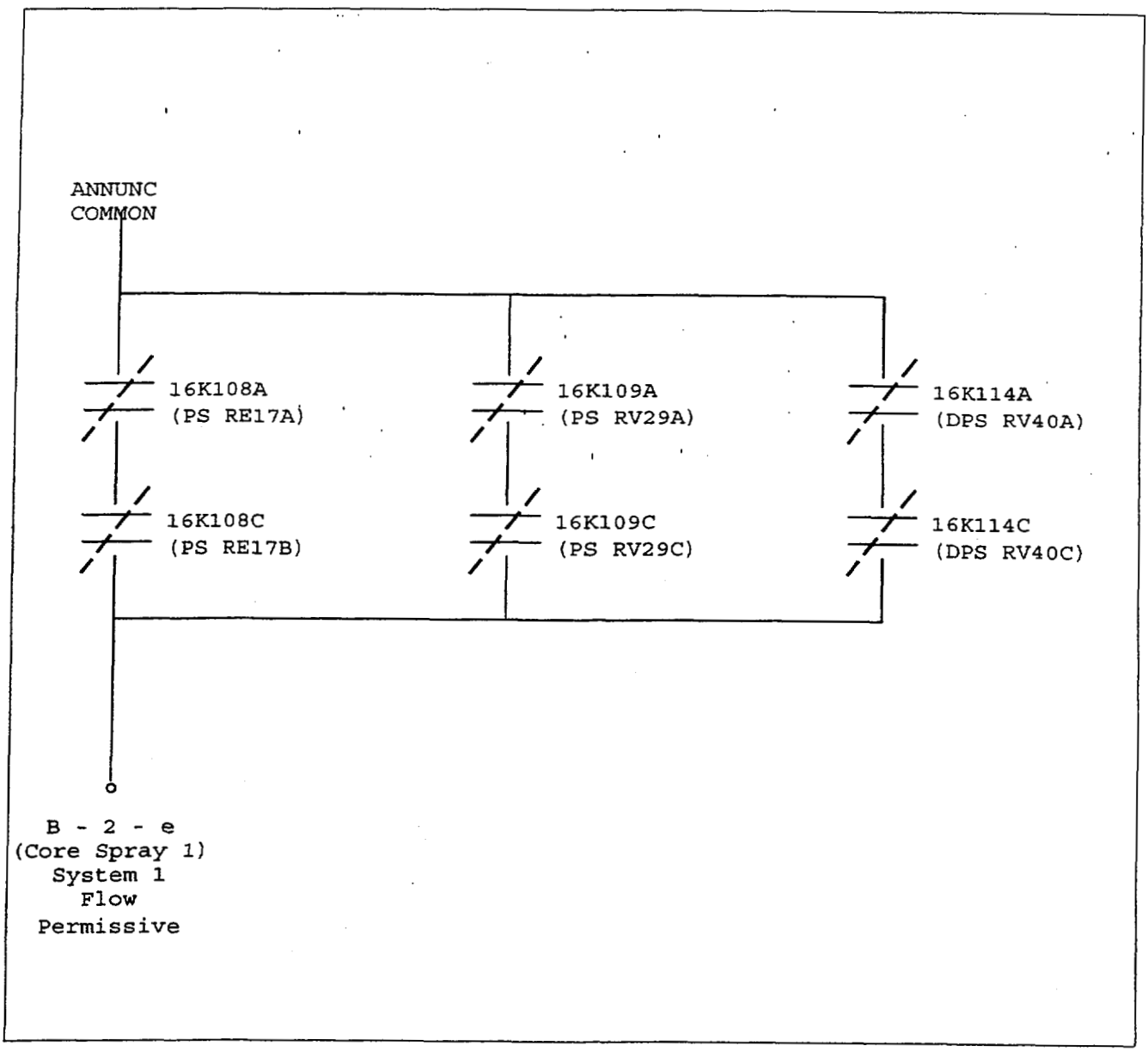

Group Heading	
C O R E S P R A Y 1	B - 3 - e

B S T R P U M P
A / C O L

CAUSES:	SETPOINTS:	ACTUATING DEVICES:
Core Spray booster pump, NZ03A or NZ03C, drive motor overload.	430 amps	49 NZ03A or 49 NZ03C
		Reference Drawings: GE 116B8328 Sh. 15A, 15B GU 3E-611-17-004 Sh. 1

CONFIRMATORY ACTIONS:

AUTOMATIC ACTIONS:

NONE

MANUAL CORRECTIVE ACTIONS:

Determine which pump is affected. Start alternate pump as required and trip affected pump. Refer to 2000-OPS-3024.07 "Core Spray System Diagnostic and Restoration Actions".

BSTR PUMP A/C OL

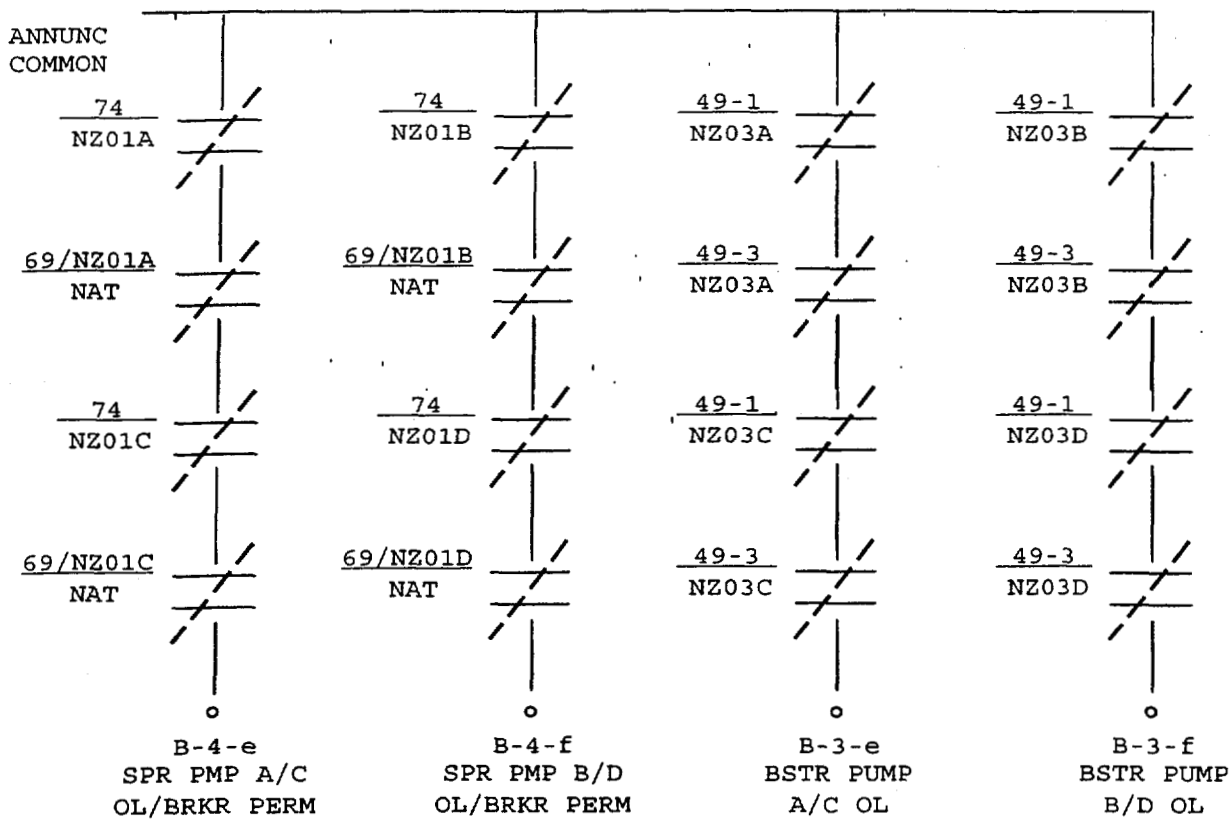

SPARGER 1 DP HI

CAUSES:	SETPOINTS:	ACTUATING DEVICES:
High pressure differential across Core Spray System 1 sparger nozzles due to Core Spray line break in the vessel annulus.	0.3 ± 0.3 psid	DPIS RV30A
		Reference Drawings: GE 148F712 GE 885D781 GE 112C2845 Sh. 3 GU 3E-611-17-004 Sh. 2

CONFIRMATORY ACTIONS:

Verify pressure differential at instrument rack RK04.

AUTOMATIC ACTIONS:

None

MANUAL CORRECTIVE ACTIONS:

If instrument reading is greater than or equal to 1 psid, consider Core Spray System 1 inoperable. Verify operability of System 2.
Notify Licensed Operations Supervisor. Core MAPLHGR must be brought within 90% of limit within 2 hours. Contact Core Engineering by referencing the Core Maneuvering Daily Instructions for guidance on rod movement and power changes.

SYSTEM 2 FLOW PERMISSIVE

CAUSES:	SETPOINTS:	ACTUATING DEVICES:
Booster pump differential pressure greater than 47.0/25.0 psid (RV40B/RV40D)	47.0 psid 25.0 psid	DPS RV40B or DPS RV40D
- AND -		- AND -
Core Spray pump discharge pressure greater than 100 psig	140 psig	PS RV29B or RV29D
- AND -		- AND -
Reactor pressure less than 305 psig	305 psig	RE17C or RE17D
NOTE: This alarm will activate only if all three conditions are met indicating that core spray should be injecting into the depressurized Rx core.		

Reference Drawings:

NU 5060E6003 Sh. 2 & 4
GU 3E-611-17-004 Sh. 1

CONFIRMATORY ACTIONS:

Check pump discharge pressures on Panel 1F/2F.

Check reactor pressure on Panel 4F.

AUTOMATIC ACTIONS:

Core Spray pumps discharge pressure greater than 140 psig allows start of booster pump. Failure of booster pump to develop a differential pressure greater than 47.0/25.0 psid (RV40B/RV40D) within 5 seconds trips booster pump and starts alternate pump. Reactor pressure less than 305 psig permits opening of Core Spray isolation valves with system initiation. NOTE: The alternate booster pump will not start automatically unless failure of both primary booster pumps occur.

MANUAL CORRECTIVE ACTIONS:

If alarm sounds and all three conditions are not met, repair switches if defective.

SYSTEM 2 FLOW PERMISSIVE

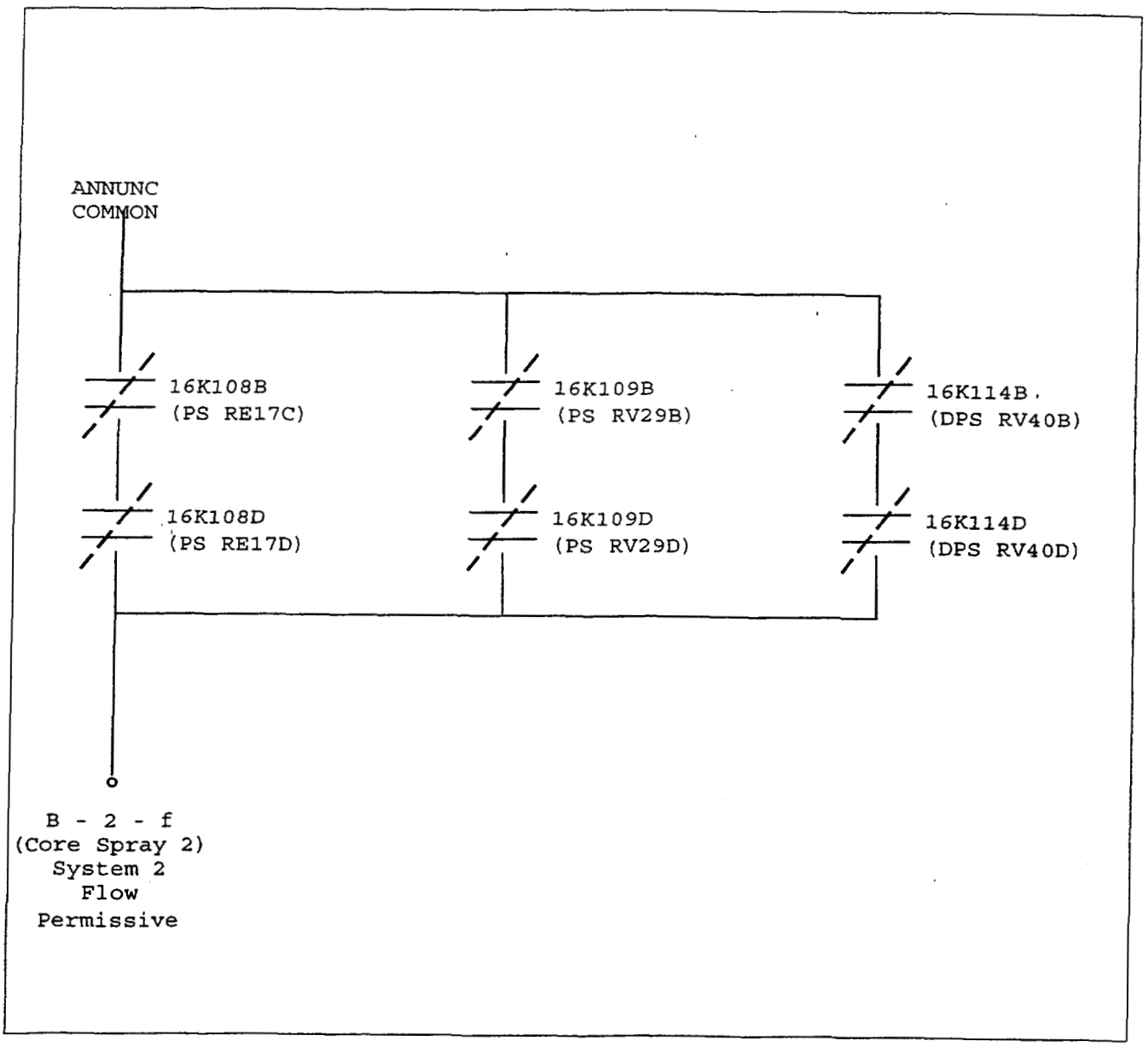

Group Heading	
C O R E S P R A Y 2	B - 3 - f

B S T R P U M P
B / D O L

CAUSES:	SETPOINTS:	ACTUATING DEVICES:
Core Spray booster pump, NZ03B or NZ03D, drive motor overload.	430 amps	49 NZ03B or 49 NZ03D
		Reference Drawings: GE 116B8328 Sh. 15C, 15D GU 3E-611-17-004 Sh. 1

CONFIRMATORY ACTIONS:

AUTOMATIC ACTIONS:

NONE

MANUAL CORRECTIVE ACTIONS:

Determine which pump is affected. Start alternate pump as required and trip affected pump. Refer to 2000-OPS-3024.07 "Core Spray System Diagnostic and Restoration Actions".

BSTR PUMP
B / D OL

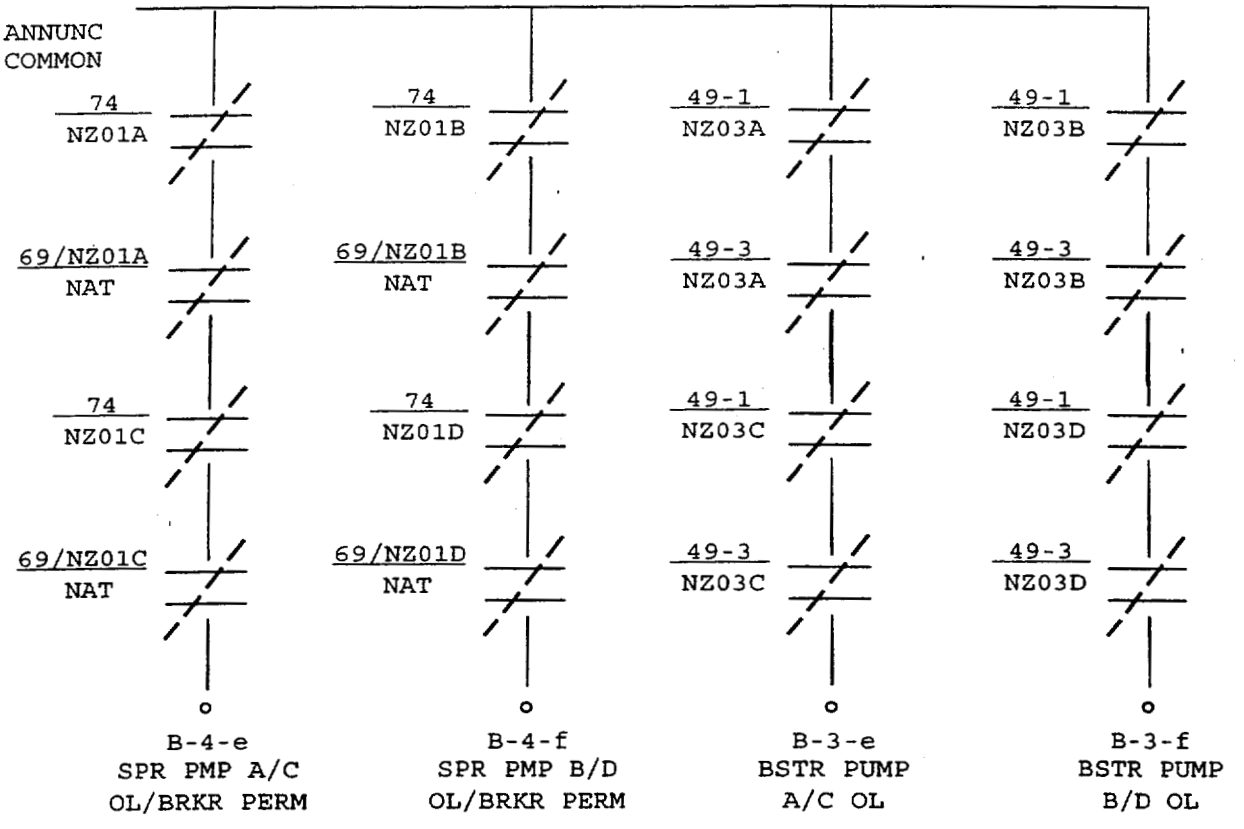

Group Heading	
CORE SPRAY 2	B - 5 - f

SPARGER 2 DP HI

CAUSES:	SETPOINTS:	ACTUATING DEVICES:
High pressure differential across Core Spray System 2 sparger nozzles due to Core Spray line break in the vessel annulus.	0.3 ± 0.3 psid	DPIS RV30B
		Reference Drawings: GE 148F712 GE 885D781 GE 112C2845 Sh. 3 GU 3E-611-17-004 Sh. 2

CONFIRMATORY ACTIONS:

Verify pressure differential at instrument rack RK04.

AUTOMATIC ACTIONS:

None

MANUAL CORRECTIVE ACTIONS:

If instrument reading is greater than or equal to 1 psid, consider Core Spray System 2 inoperable. Verify operability of System 1.
Notify Licensed Operations Supervisor. Core MAPLHGR must be brought within 90% of limit within 2 hours. Contact Core Engineering by referencing the Core Maneuvering Daily Instructions for guidance on rod movement and power changes.

RPV WATER LEVEL CONTROL (LEVEL RESTORATION)

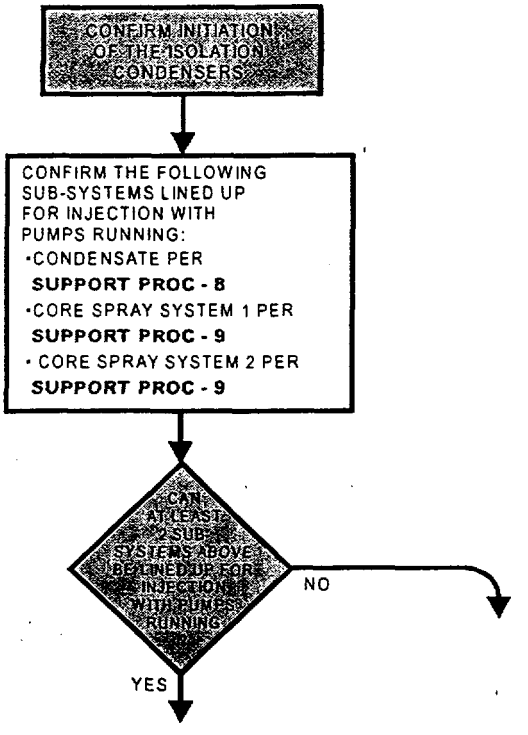

DISCUSSION

The purpose of this step is to maximize the injection capability of the RPV injection subsystems. This is accomplished by confirming the correct system lineup, aligning the system for maximum flow, and confirming the pumps in the system are running in accordance with the applicable Support Procedure. Subsystem flow is maximized at this time to allow vessel makeup as pressure decreases below their respective shutoff heads. RPV pressure is reduced through either the RPV Pressure Control leg or from an emergency depressurization, which may be directed in subsequent steps. It is important to note that the direction to maximize flow at this point does not of itself authorize exceeding the 100°F/hr cooldown rate or provide a basis for anticipating emergency depressurization.

Core Spray System flow is maximized regardless of NPSH or Vortex limits. Restoring RPV water level to ensure adequate core cooling takes precedence over any potential damage to the pumps.

(Note - authorization to exceed NPSH and Vortex limits is given in the applicable Support Procedure by the omission of any direction to adhere to these limits.)

RPV injection subsystems are defined by the physical separation of components, flow paths, and injection points. An RPV injection subsystem, as identified in this step, is a motor-driven system loop that is capable of supplying makeup water to the RPV. Core Spray System 1, along with the flow path from the Torus to the RPV, forms one injection subsystem. The corresponding equipment in Core Spray System 2 forms a second subsystem. Any Condensate pump or pumps and a flow path from the Main Condenser hotwell through the Feedwater heaters and Feedwater Regulating Valves to the RPV constitute the third injection subsystem.

Support Procedure - 8 for the Condensate System, and Support Procedure - 9 for the Core Spray System provide instructions for confirming the correct subsystem lineups, aligning the subsystem for maximum flow, and confirming the pumps in the subsystem are running.

RPV WATER LEVEL CONTROL (LEVEL RESTORATION)

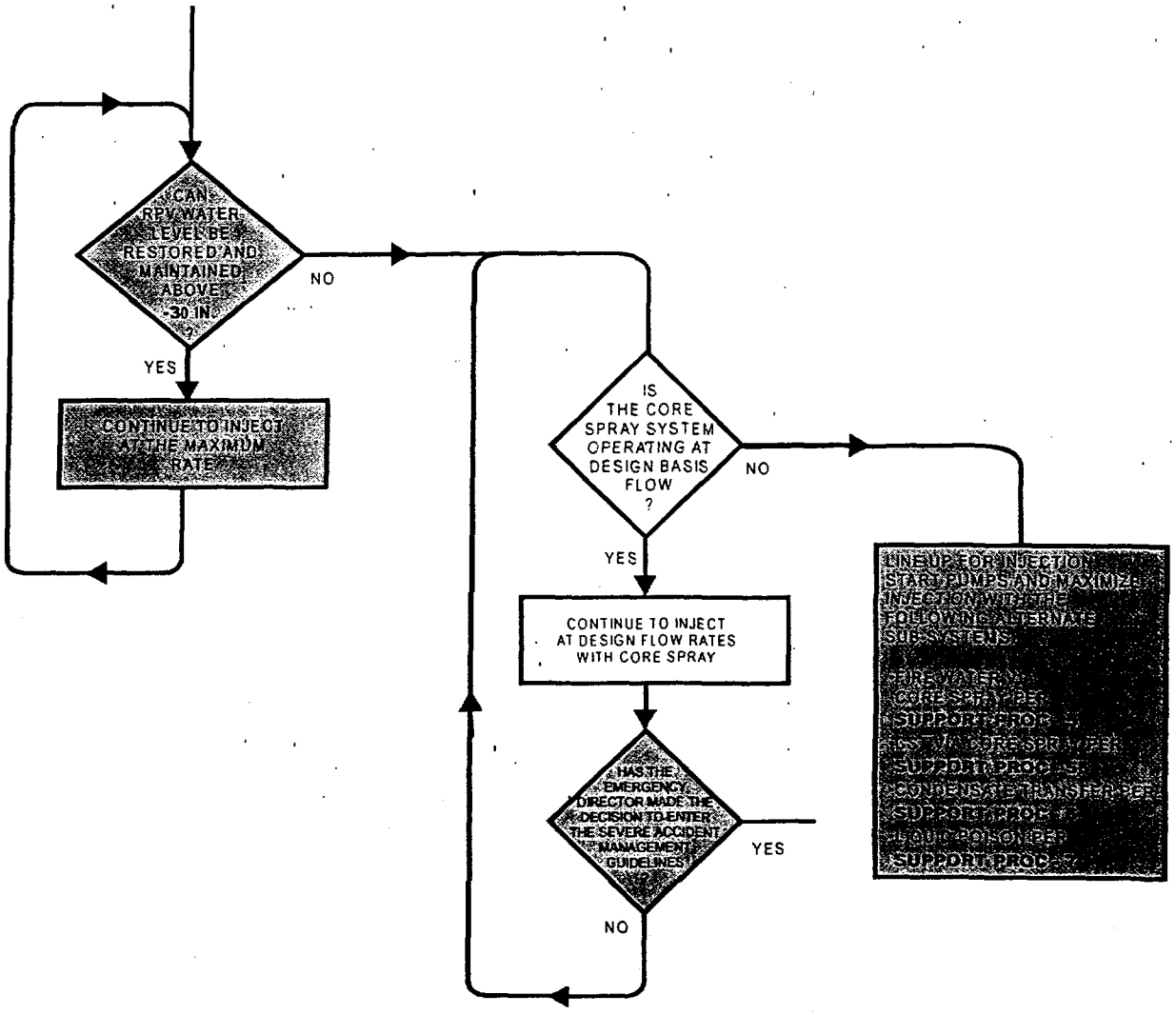

DISCUSSION

The Level Restoration steps have been expanded to include the Core Spray System operating as designed as a success path for alternate level control. This change permits reliance on design basis core cooling criteria in preference to low-quality injection and Primary Containment flooding. As long as RPV water level can be restored and maintained above the Minimum Steam Cooling RPV Water Level or design basis flow from the Core Spray System can be established and maintained, the core cooling will remain within design basis and no other action is immediately required. The "design basis" core cooling criteria is derived from information contained in the Plant FSAR.

SUPPORT PROCEDURE 9

LINEUP FOR CORE SPRAY SYSTEM INJECTION

1.0 PREREQUISITES

Confirmation of the lineup for Core Spray System injection has been directed by the Emergency Operating Procedures.

2.0 PREPARATION

None

3.0 PROCEDURE

> CAUTION
>
> Core Spray suction strainer plugging may occur due to debris in the Primary Containment and result in a loss of Core Spray System Flow.

3.1 Confirm open Core Spray System 1 and 2 Pump Suction Valves (Panel 1F/2F).

V-20-32	_____
V-20-3	_____
V-20-33	_____
V-20-4	_____

3.2 Confirm closed Core Spray System 1 and 2 Test Flow Return Valves in each system (Panel 1F/2F).

V-20-27	_____
V-20-26	_____

3.3

> CAUTION
>
> NPSH problems will develop on all operating pumps if more than 4 Containment Spray/Core Spray Main pumps are operated at the same time.

IF 4 Containment Spray/Core Spray Main pumps are in operation,

THEN secure Containment Spray pumps as necessary to run Core Spray pumps.

3.4 Confirm one Core Spray System Main Pump operating in each system (Panel 1F/2F).

SYS1	_____
SYS2	_____

OVER

3.5 As directed by the LOS, confirm one Core Spray System Booster Pump operating in each system (Panel 1F/2F). SYS1 _____ SYS2 _____

3.6 Confirm open Core Spray System 1 and 2 Discharge valves (Panel 1F/2F). V-20-12 _____ V-20-18 _____

3.7 WHEN RPV pressure decreases to **310 psig**,
THEN confirm open at least one Core Spray Parallel Isolation valve in each System (Panel 1F/2F), SYS 1 _____ SYS 2 _____

3.8

NOTE

Maximum Flow is achieved with one main pump and one booster pump running and both parallel isolation valves open in each system.

Maximize injection into the RPV with the operating Core Spray Systems.

3.9

CAUTION

Operation of Core Spray pumps with flow above the NPSH or vortex limits may result in equipment damage. When operating beyond any flow limits, periodic evaluations should be made to verify that continued operation beyond these limits is still required.

Monitor the NPSH and Vortex limits of the running Core Spray pumps per Figures A and B.

3.10 IF NPSH limits are reached,
THEN secure the booster pump in the system with NPSH limitation.

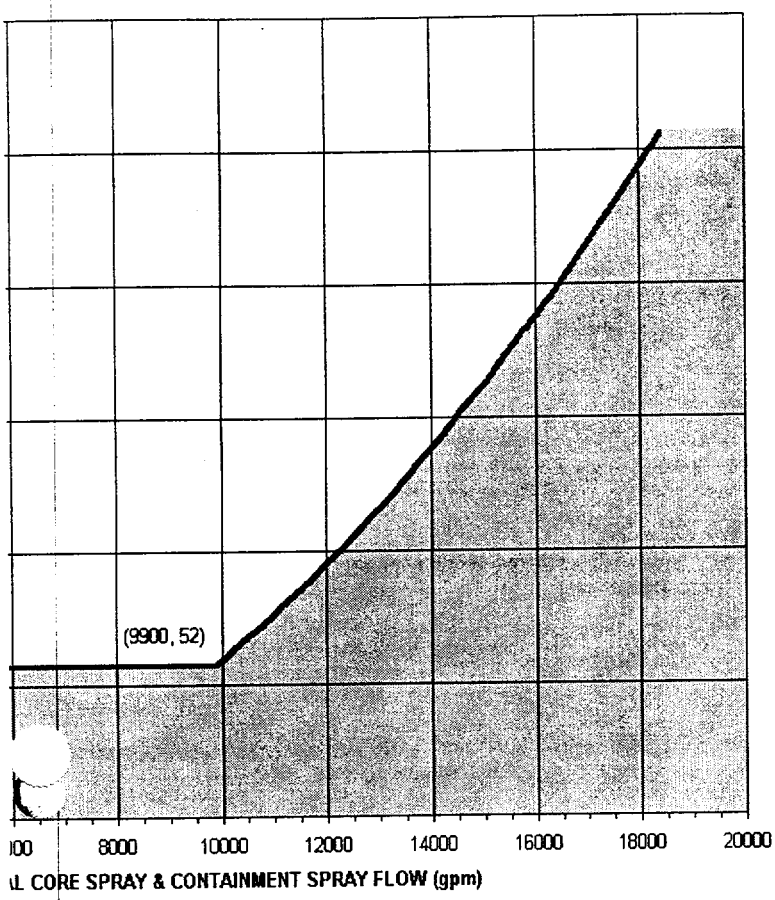

FIGURE A
CORE SPRAY VORTEX LIMIT

OVER

FIGURE B
CORE SPRAY NPSH LIMIT

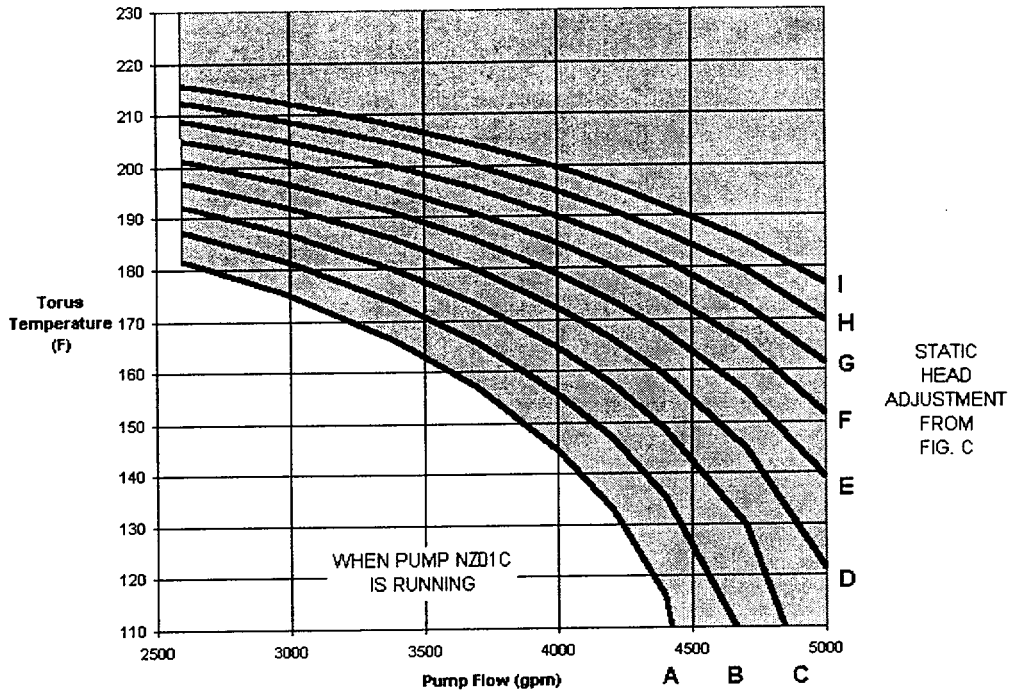

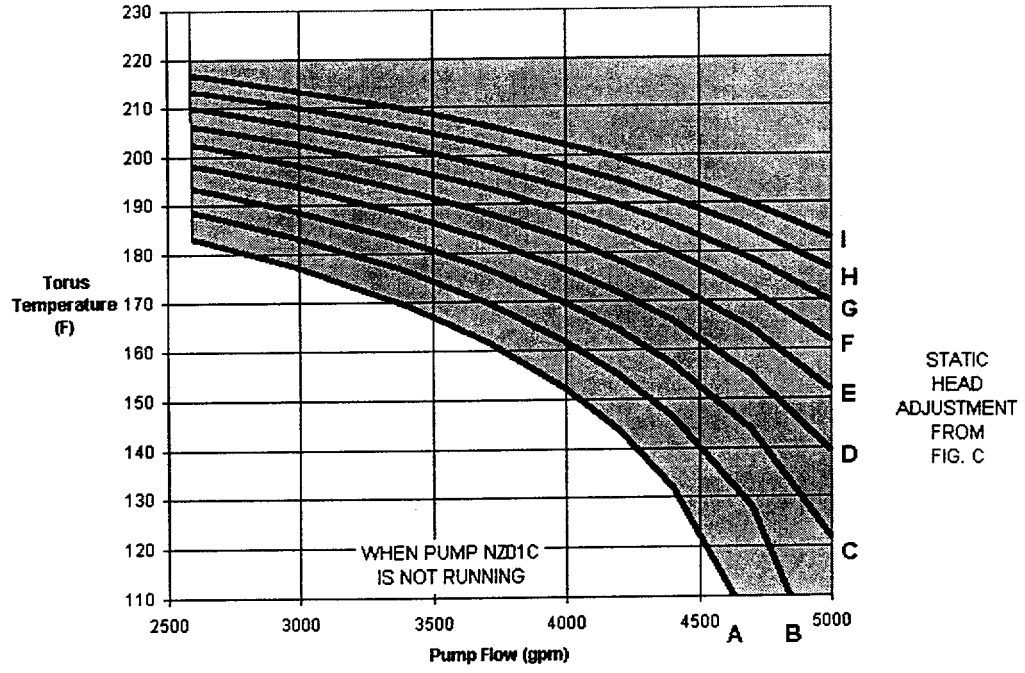

FIGURE C
CORE AND CONTAINMENT SPRAY STATIC HEAD CURVE

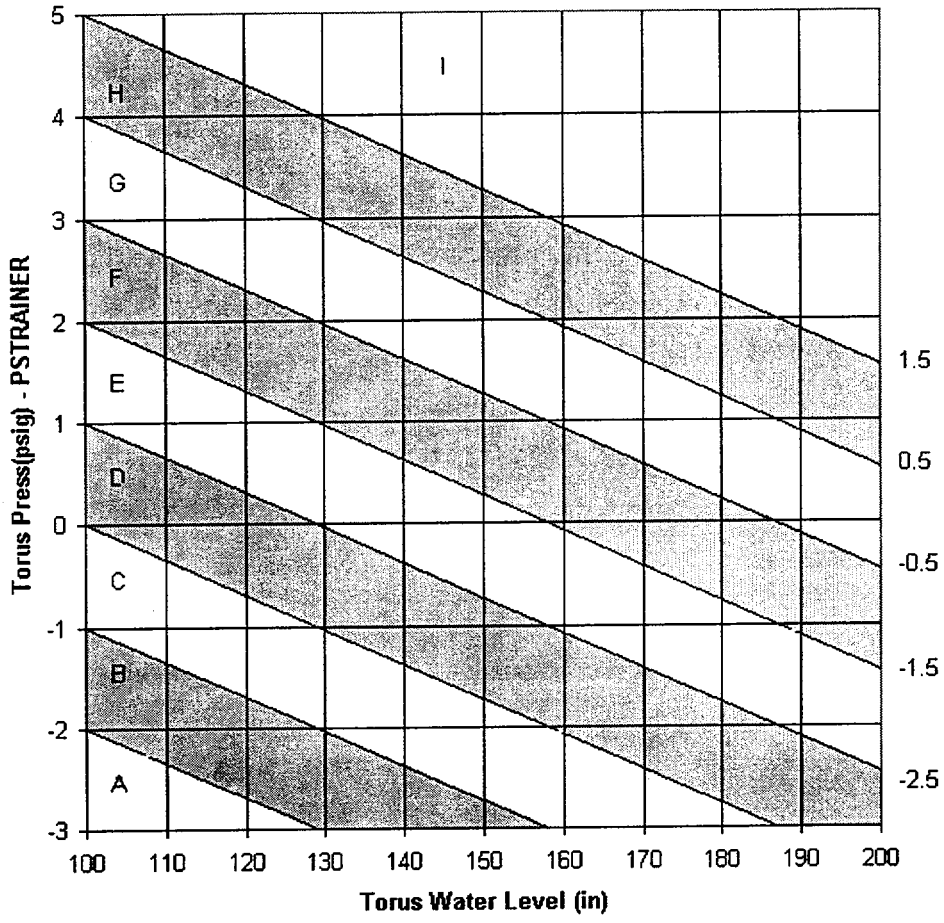

PSTRAINER VALUE

TOTAL (TORUS) FLOW (GPM)	PSTRAINER (PSL)
≤ 5000	0.3
5000 - 7500	0.5
7500 - 10000	0.8
10000 - 12500	1.2
12500 - 15000	1.6
15000 - 17500	2.1
17500 - 18400	2.3
18400 - 20000	2.7

To resolve these uncertainties two test sections were constructed. One was a full scale mockup of the upper section of the BWR core used to determine spray distribution. The second test section was a single channel arrangement to determine the effect of steam updrafts on the amount of spray entering the channel.

Extensive tests were conducted to determine the nozzle settings that produce the optimum spray distribution. Two different types of spray nozzles and three angle settings were originally employed to obtain a good spray distribution. Tests showed good flow over most of the core except at the very center region and at the very edge. In these regions the distribution factor dropped to about 0.3.

Based on test results it was concluded that the steam updrafts expected in the core are in a range where it will have little or no effect on the amount of spray flow entering a channel.

6.3.3.1.5 Spray Distributor Tests

The initial design of the spray distributor arrangement for the OCNGS (Subsection 6.3.3.1.4) consisted of 56 full jets and 56 Vee jets alternately distributed around **each of** the sparger rings at equal intervals. The 56 full jet nozzles were set at an elevation angle of 10 degrees below the horizontal. Of the 56 Vee jet nozzles, 28 were aimed 4 degrees below the horizontal and 28 at 8 degrees below the horizontal.

The redesigned spray distributor arrangement presently installed at Oyster Creek consists of 56 full jet nozzles and 56 open elbows **for each of the sparger rings.** This arrangement is identical to the preceding arrangement, except the Vee jets are removed and the flow exits through the open elbow. Thus, there are 56 full jets and 56 flow elbows alternating around **both of** the spargers at equal intervals. **Each 3 ½ inch sparger inside the shroud extends half way around the inside of the shroud in both directions. Thus, each sparger completely encircles the core. For the lower sparger, the full jets are set at a negative elevation angle of 8 degrees below the horizontal, and the flow elbows are set at a negative 6 degrees. For the upper sparger, the full jets are set at a negative elevation angle of 11 degrees below the horizontal, and the flow elbows are set at a negative 8 degrees.**

The open flow elbows greatly reduce the core spray velocity and result in a much more "quiet" and less sensitive system. Effects of total flow rate, angle setting, and updraft were investigated.

Tests were run with flows as low as 3100 gpm and as high as 4500 gpm. The minimum design flow of 2.45 gpm per bundle which was established as the design basis (Subsection 6.3.3.1.1) was achieved across the core with either flow rates.

The maximum energy transfer rate to the core spray in the event of a Loss-of-Coolant Accident for the 7x7 fuel array assembly configuration would be approximately 3% of rated power. Energy is initially stored in the fuel until the temperature has risen to the value where the heat being transferred equals the heat being generated. At this point in time the heat being generated is equal to the decay heat generation. For the average channel this occurs at 300 seconds and the decay heat equals 3% of rated power.

The hot channel peaks earlier in time at about 230 seconds and the decay heat rate is about 3.2%. The maximum steam updraft can be calculated from a heat balance using the 3% decay heat and the design flow of 2.45 gpm. This results in a maximum steam flow rate of approximately 400 lb/hr for the hot channel and 260 lb/hr for the average channel.

6.3.3.1.6 Application of Early Test Results

The flow rate specified for the OCNGS was based on early tests conducted on 36 rod full length fuel assemblies. Subsequent tests on 49 rod assemblies at 2.45 gpm and at significantly lower flow rates showed that cooling was still possible at reduced flows.

Since all the water entering the shroud does not go into the fuel assemblies, the total flow to be supplied was based on early flow distribution tests. These led to the belief that of the water entering the vessel the minimum into any assembly would be about 0.4 of the amount which could enter if it were perfectly distributed across the core. The spray distributor tests discussed in Subsection 6.3.3.1.5 provided proof that the 0.40 distribution factor could be attained with the OCNGS design.

6.3.3.1.7 Evaluation of Malfunctions Affecting Spray Distribution

Several Blocked Nozzles

It is highly improbable that nozzles will be blocked because a screen device is installed, upstream from the core spray sparger, such that no particles larger than the core spray nozzle opening will be allowed to enter the sparger. The screen is 6 by 6 mesh, 0.035 inch wire with 0.132 inch openings.

This fine mesh screen is supported by diamond mesh expanded metal. Suction strainers are located at the outer periphery of the torus at an angle 45 degrees downward from the horizontal center line of the torus. This device should prevent any nozzle plugging.

If one or more do become plugged, an overall slight decrease in core spray flow will result due to the decrease in flow area, depending on the number of blocked nozzles. If it is arbitrarily assumed that five of 112 nozzles are plugged, the total spray flow decreases by only 1.5%. The flow per nozzle will increase by 3% due to the pump head characteristic which would increase by about 11 feet of water. Except for the local bundle under the affected nozzle at the periphery of the core, the rest of the core will have a distribution factor and flow rate identical to that with unplugged operation.

Based on the results of a test where a group of nozzles representing 20% of the total nozzles were plugged, it is estimated that the flow to the local bundle directly below the nozzle could drop to roughly 60% of distribution factor based on full spray flow. But, even if the local flow to the peripheral bundles is reduced as much as might be implied above, these bundles would still be adequately cooled because of their low power.

Sheared Nozzle

The core spray nozzles are situated such that no part of the nozzle or piping connecting the nozzle to the sparger protrudes out past the sparger ring. This arrangement virtually eliminates a mechanism for shearing off a nozzle.

If, however, it is arbitrarily assumed that one of the 112 core spray nozzles is sheared off, the flow to the remaining 111 nozzles will momentarily drop for a few seconds to approximately 94% of rated operation with 6% of the total flow going to the sheared off nozzle, until the system achieves the new equilibrium operating point. The total flow will then increase due to the increase in the spray ring orifice flow area which results in less overall system resistance. Thus, the total flow would run out on the pump characteristic curve from 3400 gpm to 3500 gpm or increase by 3%. This will result in a net overall flow decrease of only 3% of rated through the unaffected nozzles. A pump head pressure decrease of approximately six feet of water occurs due to pump runout.

The minimum core spray distribution factor based on total flow rate to the sparger will decrease to approximately 97% of the one experienced during normal operation.

The effect of the above perturbation on the absolute flow into the fuel bundles is considered negligible. The reasons are that the flow distribution factor of 0.4 is the minimum design target. Also, the design minimum flow of 0.05 gpm per rod being used to size the Core Spray System is conservative in that it is not the true minimum but, rather, the minimum flow which was tested at the time the system was sized.

From a local viewpoint, the two or three bundles directly below the sheared nozzle at the periphery of the core would be the most affected. As discussed above, the local effect of a plugged nozzle could be a reduction in flow or as much as 40% to the affected bundles. This same local flow reduction could be expected to occur also in the event of a sheared nozzle. However, the peripheral bundles have a power level of about two thirds of the average in the core. At such a low power level, a flow per rod of 0.03 gpm is more than adequate to maintain cooling. This implies that even a more severe flow reduction than that imposed by the plugged nozzle could be tolerated in the outer periphery of the core without affecting core spray performance. Neither a sheared nozzle nor a few alternately plugged nozzles would adversely affect the ability of the Core Spray System to prevent clad melting anywhere in the core.

Bowing of Fuel Channel Walls

The amount of spray entering a given fuel bundle is a function of the cross sectional area at the plane where the channel intercepts the spray. Channel wall bowing would affect the spray distribution only if it resulted in a net change in cross sectional area at the point of spray interception.

No deformation of the channel, either bowing in or out is expected at the top of the channel. This portion of the channel, from the upper tie plate to the top of the channel, never experiences any significant pressure differences between the inside and outside of the channel either in normal operation or during an accident since there are no flow resistances present.

If it is arbitrarily assumed that the top of the channel has bowed for some hypothetical reason, the effect on spray distribution would be very slight. The nominal cross sectional area of a channel is approximately 27 in^2. If a 50 mil uniform bow on all sides of the channel is conservatively assumed, the area would vary less than ±2%.

Furthermore, water that does not fall into the channel will fall on the outer wall of the channel. This will effectively cool the channel wall by providing a heat sink.

Outward or inward deformations in the region of the active fuel should not affect the cooling because a water film should still form on the channel walls. The ability of the channel wall to receive heat does not depend on clearances since the energy transfer is dominated by radiation.

Simultaneous Operation of Both Spray Rings

Simultaneous operation of both spray rings should result in delivery of twice as much water to each fuel channel as in operation with a single spray ring. The effect of both sprays operating simultaneously has been approximated from the results of selected single sparger tests. The sparger arrangement used in these tests is different than that utilized at Oyster Creek.

A series of tests were run to determine the spray distribution factor for various spray angles. The test was first run with 60 nozzles to determine the distribution. Then every third nozzle was blocked and the test was run using only the 40 remaining nozzles.

The converse test was done with flow from every third nozzle. The flow per nozzle was held constant for these tests. Superimposing the distribution of both tests yielded approximately the same distribution as recorded for the test using all the nozzles.

It was concluded from these results that the simultaneous operation of both core spray spargers will yield approximately the same distribution as the single sparger operation. It should be noted that since the flow rate for two spargers is about double that of one, twice the design flow rate should reach each fuel assembly; therefore the minimum distribution factor could drop is as low as 0.2 and adequately cool the core. There is no evidence to support any deterioration in the distribution.

6.3.3.2 System Performance

6.3.3.2.1 Emergency Core Cooling Effectiveness at 1860 MWt

Introduction

Each of the two 100 percent Core Spray System loops has been designed to protect the core against clad melting for a large spectrum of Loss-of-Coolant Accident conditions. The ADS is provided to depressurize the reactor vessel for the very small breaks below the lower limit of protection of the unassisted Core Spray System. Therefore, either of the Core Spray System loops in conjunction with the ADS provide adequate reactor core cooling and prevent clad melting for the entire spectrum of possible liquid or steam line break sizes. This protection is provided without dependence on normally available station auxiliary power.

Additional emergency core cooling capability is provided by the Condensate and Feedwater System in the more likely event that station auxiliary power is available.

Figure 6.3-6 shows the capabilities of the various emergency core cooling systems to protect the core against clad melting. A solid bar indicates the spectrum of break sizes for which a given system can protect the core without assistance from any other systems. A dashed bar indicates the range of capability of a given system in conjunction with another system.

Large Breaks (Core Spray System Alone)

The largest possible line break size is the double ended recirculation line break resulting in a flow area of 6.22 ft^2. A break of this size is considered very unlikely and the analysis of this hypothetical accident is performed primarily because the results of the vessel blowdown analysis and core heatup form the basis for design not only of the Core Spray System flowrate, but also calculations of containment response, metal-water capability, heat exchanger sizing and other parameters.

It was assumed that the reactor is operating at 1860 MW thermal* when a break in the primary system equal in area to twice the flow area of a recirculation line (6.22 ft^2) occurs instantaneously. The critical flow rate from this break was calculated by the methods presented by Moody (Reference 2).

The thermal response of the core was calculated by a digital computer program. Radiation heat transfer from fuel rod to fuel rod and to the channel box was considered by the program. No heat losses from the overall reactor core itself were included. The metal-water reaction was defined in the computer program by the expression of Baker (Reference 3), which defines the rate of reaction as a function of both local metal temperature and the current extent of the reaction.

The predicted maximum temperature reached in the entire core was approximately 1800°F. This temperature is reached by only a very small part of the cladding. In fact, ninety percent of the clad volume never exceeded 1500°F.

The extent of metal-water reaction throughout this transient was calculated continuously. Because of the moderate cladding temperature, the extent of reaction was only 0.08 percent of the cladding and channel material.

Calculations show that the percent of rods which perforate for the design break is about 20 per cent.

* For the current cycle performance evaluations refer to Subsection 6.3.3.3.

Small Breaks

For small breaks below the lower limit of the unassisted Core Spray System (0.2 ft^2) the ADS or the Feedwater System (by means of inventory makeup) depressurize the reactor to allow the Core Spray System to provide adequate cooling.

The system performance curves over the small break size spectrum show that in all cases the no clad melting criterion is easily satisfied by a single Core Spray System loop and only three of the five EMRVs.

The design basis heatup calculations consider the core to be insulated except for thermal redistribution among the rods after the liquid inventory level falls below the core midplane. This is a highly conservative assumption for several reasons. Two of the more important reasons are that significant level swelling and steam cooling will exist even after the midplane is uncovered by the fictitious solid water or liquid inventory level.

In calculating the time when the core is half uncovered, the inventory model treats the core spray flow simply as a mass input into the model as a function of time which depends on the vessel pressure and core spray pump head at any given time.

No credit is taken in the core heatup code for spray cooling of the core until the spray reaches rated flow. Thus, no credit is taken for the distribution across the core either. This aspect is important only when the core is less than half covered, however.

The radiation heat transfer coefficients and convection within the fuel bundle were determined using grey body form factors and Zircaloy-4 emissivities.

The heat transfer coefficients used in the analysis for breaks less than 0.25 ft^2 were based on the Jens Lottes values until the core was half uncovered and then the core was assumed to be insulated except for radiation heat transfer between the fuel rods and the channel only.

6.3.3.2.2 Design Analyses for 1930 MW thermal

The analyses of Core Spray System performance during LOCAs in Subsection 6.3.3.2.1 were based on an empirical representation of the convective heat transfer coefficient for spray cooling developed by E. Janssen from tests conducted on 36 rod simulated reactor fuel bundles. Subsequent high temperature spray cooling tests conducted under the FLECHT program (Reference 5), utilizing different initial conditions and peaking arrangements, underscored the need for a more fundamental approach to the prediction of the heat transfer coefficients. A

revised spray cooling correlation (Reference 6) was subsequently derived and was applied to the LOCA analysis for Oyster Creek at the full design rating of 1930 MW thermal.

These results were later superseded, and the ECCS was re-evaluated in accordance with the Atomic Energy Commission Interim Policy Statement published on June 19, 1971. For the current cycle performance evaluations refer to Subsection 6.3.3.3.

6.3.3.3 Current Performance Evaluations

Current performance evaluations for the OCNGS ECCS are contained in Section 15.6.5.

6.3.3.4 Other Factors Affecting Performance

6.3.3.4.1 Structural Requirements

Core Spray Sparger and Piping Internal to the Vessel

The core spray sparger and the piping internal to the vessel are capable of sustaining the primary stresses resulting from the accident loads in combination with the maximum earthquake loading and still remain within ASME Section III stress allowable limits for Class A vessels.

Piping External to the Vessel

The pipe external to the vessel meets all the stress requirements of the ASA B31-1 (1955) Piping Code for the maximum operating loads in combination with the design earthquake. Maximum operating loads include design pressure, thermal expansion, and dead weights. For the maximum operating loads in combination with the maximum earthquake deflections and deformations are limited such that the performance or capability of the system is not affected.

6.3.3.4.2 Water Injection into a Hot Core Spray Sparger Ring

Water for core spray has to flow into a hot sparger ring inside the core shroud before it can enter the core. Steam can be generated as the water contacts the hot surfaces and this steam can delay, or even intermittently interrupt, the flow of water. Time delays and pulsations have been reported (References 15 & 16).

Theoretical considerations lead to the conclusion that the degree of pressure surging inside the ring will vary inversely as a function of the openings in the sparger and in some proportion to the surface area of the hot pipe. Thus, by designing the holes in the sparger sufficiently large to allow

QUESTION #37

Following a rod drifting in, the RWM will "relatch". RMCS will locate the highest completed step that meets which one of the following criteria?

A. LESS THAN three insert errors and MORE THAN two rods are withdrawn past the insert limit.

B. **NO** insert errors and AT LEAST one rod is withdrawn past the insert limit

C. LESS THAN three insert errors and AT LEAST one rod withdrawn past the insert limit.

D. **NO** insert errors and **NO** withdraw errors

ANSWER: C

Question 37: Oyster Creek's position

Per RAP H-6-A, ROD DRIFT, the cause is any control rod drifting more than 3" through an odd rod position, when the control rod is not selected. The RAP directs a scram if more than one rod is moving in or out abnormally. If only one rod is moving, it directs actions in accordance with ABN-6, Control Rod Drive System.

The action to select a control rod is not governed by procedure, because it is expected that the operator knows to turn on Rod Power and depress the associated push button on the rod select display. For a rod drift, if the correct rod is selected and the rod drift alarm clears, that is definitive evidence that only one control rod is drifting, as the rod drift alarm only alarms if a rod's odd reed switch is picked up and the rod is not selected. Selecting the rod to diagnose the drifting condition aids the operator in determining if more than one rod is drifting (due to the rod drift alarm not clearing when the drifting rod is selected), which will dictate a reactor scram IAW RAP H-6-a for multiple rods drifting. Within that RAP, the operator actions (manual corrective actions) dictate a determination whether more than one rod is drifting. If only one rod is drifting, then the RAP sends the operator to ABN-6 for further instructions. If the operator selects a different rod (i.e., one that is NOT drifting), the consequence of this action is immaterial, in that the selected rod will not move until the operator applies a movement signal to it. Therefore, selecting the rod is entirely within the guidance of User Capability as defined in HU-AA-104-101.

Procedure HU-AA-104-101 (revision 0), Procedure Usage and Adherence, section 4.6 addresses actions called User Capability (skill of the craft.) It stipulates that actions may be performed by trained, qualified individuals as "User Capability" without a procedure provided that:

- No procedure exists for the action and
- The task is simple, short, and routine where the consequences of improper performance are not significant.

Per the RWM tech manual (VM-RW-1316), on page 20 of 42, section 3.11.1, ". . . The rod drift signal explicitly defines to CRMS [Reactor Manual Controls] that a full core scan and rod block requests are to be made *if the rod drift has not cleared within a T1 time period.* Additionally, a second full core scan request is to be made after the drift has been clear for a T2 period of time and the first full core scan has been completed." The timer offsets are described on page 11 of 39 of the detailed design manual, which was also provided in the original submittal.

Timer T1 is a 10 second offset for the rod drift to clear.
Timer T2 is a 10 second offset for the rod drift to remain clear.

In the event the operator does not select the drifting rod within the first 10 seconds, timer T1 will time out, which will call for a full core scan. This will result in the RWM latching to a previously completed step, and will show the drifted rod as an error. If the rod is not selected within the first 20 seconds of the drift, a second full core scan will then be made, subsequent to the T2 timer timing out. This will result in selecting answer "C".

If, however, the operator selects the drifting rod within the first 10 seconds, timers T1 and T2 will never time out. Therefore, the rod will be treated (within the RWM) as a slowly settling rod, and no errors will be generated. In this case, the only way an insert error will be detected is based upon a relatch signal being generated by the RWM. While the rod is selected, this scan will only occur when the RWM performs its periodic full core scan. Unless a full core scan is processed, the selection of the drifting control rod within the first 10 seconds of the drift will result in an initial latch showing NO insert errors and NO withdraw errors. The rod will subsequently be identified as an insert error whenever the next periodic core scan is completed. This will result in selecting answer "D".

Since no time line is given within the question stem, answers "C" and "D" are correct as stated above.

Oyster Creek recommendation: Accept "C" and "D"

References: Rod Worth Minimizer lesson plan (sent previously)
VM-RW-1316, RWM DETAILED DESIGN MANUAL, sections 3.5.2.3, 3.11.1, and 3.11.3.3 (sent previously)
ABN-6, Control Rod Drive System (sent previously)
RAP H-6-a, ROD DRIFT (sent previously)
HU-AA-104-101 Procedure Use and Adherence

2.5.1.8 Task Names

These parameters define the names of all tasks sending or receiving messages in the RWM System. These are the names used by the Task Builder (TKB) when the tasks are built and used by the system message facility to pass messages between RWM tasks. These parameters are RAD50 for actual use with system service calls. RAD50 is a method used by the Digital Equipment Corporation for storing three bytes of selected character data in two bytes instead of the normal three.

Task names as currently defined in the system are as follows:

PZDAS	'DAEXEZ'	Data Acquisition Subsystem
PZMMI	'MMEXEZ'	Man/Machine Interface Subsystem
PZARS	'DREXEZ'	Data Archival/Retrieval Subsystem
PZCRM	'CRMEXZ'	Control Rod Monitor and Scan
PZCOM	'COMTKZ'	PCS Communications Subsystem
PZSQE	'SEQEDZ'	Sequence Editor
PZDBE	'DBEDTZ'	Database Editor
PZCSL	'CONSLZ'	Console terminal message receiver.

2.5.1.9 Message Argument Offsets

These parameters define the offsets into an array for building the intertask messages. The arrays used for the messages must necessarily be local to the routine sending the message.

PIMNO = 1	Message number
PINUM = 2	Number of arguments
PIAR1 = 3	Argument 1
PIAR2 = 4	Argument 2
PIAR3 = 5	Argument 3
PIAR4 = 6	Argument 4
PITM1 = 11	Time word 1: (year, month)
PITM2 = 12	Time word 2: (day, hour)
PITM3 = 13	Time word 3: (minute, second)

1 TICK = $\frac{1}{60}$ SEC

2.5.1.10 Timers

These parameters define the number of ticks CRMS is required to wait before initiating a full core scan under the scram and rod drift conditions. These parameters are defined as follows:

PT1TMR = 600	10 Second Offset for rod drift to clear
PT2TMR = 600	10 Second Offset for rod drift to remain clear
PTSCRM = 600	10 Second Offset after scram to full core scan

3.3.3 Digital Equipment Corporation, RSX-11M/M-Plus, Version 4.2, Volume 4C, Executive Reference Manual

3.4 GENERAL DESCRIPTION OF CRMS

3.4.1 CRMS Overview

CRMS performs an initialization routine at the time of RWM system initialization by a cold or warm boot of the RWM system computer. The CRMS initialization routine serves to test the operation of the RWM block/permissive function and initialize local variables within CRMS.

In conjunction with CRMS initialization, the DAS subsystem is prompted to perform a full core scan to provide an update of the current control rod positions. Upon the completion of the full core scan as determined through the status of the full core scan request flag in the global CVT, CRMS obtains the updated rod positions from the CVT and attempts to "latch" to the prescribed **Low Power** sequence. **(The RWM boots in Lower Power Mode by default.)** The latching operation consists of the determination of the sequence step corresponding to the current control rod pattern. Once the sequence has been latched, CRMS can compare present control rod positions to those required, identify existing errors and initiate control rod blocks as warranted.

During execution, CRMS monitors control rod position through either of two modes. The normal mode of operation is designated "Operator Follow Mode". In this mode of operation, CRMS tracks changes in RWM system input data resulting from normal control rod positioning by the plant operator. However, a need for a full core scan update of rod positions may periodically become apparent based on triggering events (e.g., rod drift alarm activation, reactor scram initiation, etc.) or through request by external sources. In such instances, the "Scan Mode" of operation is active and CRMS obtains updated position information for all control rods upon the completion of a full core scan by the DAS subsystem.

Within the realm of plant operation requiring activation of the sequence monitoring function, latching logic is required for the determination of the proper latched sequence step. **Under Low Power Mode,** in-step latching is accomplished as part of the operator follow mode. Each new sequence step is initiated through selection of control rods at the reactor manual control panel. Under certain conditions including the occurrence of a full core scan or the occurrence of specific changes in plant operation, relatching to the prescribed sequence is necessary. The CRMS module seeks to find the proper sequence step corresponding to current control rod positions by performing a search for the highest step completed without encountering an insert block condition. Instances during normal RWM system operation in which a relatch is required include the following:

- o RWM System Initialization
- o RWM System Unbypass
- o Following Rod Drift Timer Expiration
- o Following Operator Rod Test Request
- o Following Correction of an Existing Insert or Withdraw Error
- o When Power Drops Below LPAP
- o When Power Drops Below LPSP
- o Following any Full Core Scan (Power Less Than LPAP)
- o On a timed interval during operation in the transition zone (Power between LPSP and LPAP setpoints)

Utilizing the rod position input data and sequence latching logic detailed above, CRMS establishes a basis for the performance of the sequence monitoring function. The sequence monitoring function generally serves to enforce the required sequencing constraints identified through the engineer-defined sequence and **under Low Power Mode,** BPWS rules. Exceptions to this condition exist concerning the loading of special shutdown margin or test sequences and during activation of the rod test request. **Under Low Power Mode,** whenever a shutdown margin or test sequence is loaded in global, BPWS constraints are suppressed and rod sequencing is determined by the engineer-defined sequence alone. BPWS constraints may also be suppressed via the VT-220 Man-machine function, as the engineer defined sequence

longer enforce adherence to prescribed sequencing constraints. Under operating conditions above the LPAP or whenever the RWM system is placed in bypass by the plant operator, Low Power sequence monitoring shall cease to be active.

Sequence monitoring, however, is available above the LPAP, but requires manual activation by the Control Room Operator. Power Operations Mode may be activated to enforce a Power Operations Mode sequence at any power level while the RWM bypass switch is in the normal position, and Power Operations Mode (POM) has been started, and the POM sequence has been loaded.

Exceptions to this functional logic for sequence monitoring activation include conditions involving reactor scram initiation, bypass of the LPAP status within the RWM system programming and request of the rod test sequencing constraint by the plant operator.

During the performance of the sequence monitoring function, the CRMS subsystem controls rod block status data located in the global CVT to enforce the prescribed sequence for rod movement as necessary. For normal Low Power plant operation below the LPSP, control rod movement shall be required to follow sequencing constraints established by an engineer-defined sequence and Banked Position Withdrawal Sequence (BPWS) rules. Whenever any change is detected in control rod position which exceeds bounds established for the prescribed sequence (2 insert errors or 1 withdraw error), corresponding control rod motion is blocked except for the correction of existing errors.

Under Power Operations Mode, control rod movement shall be required to follow sequencing constraints established by an engineer-defined POM sequence. The POM sequence and its enforcement differ from the Low Power Mode as follows:

- **Low power groups (Groups 1-1 through Groups 4-1) may not be defined and therefore may not be moved under Power Operations Mode.**
- **Individual control rods may be defined and therefore moved under Power Operations Mode.**
- **Only one insert error is allowed under Power Operations Mode.**
- **Under Power Operations Mode, a select error generates both insert and withdraw blocks.**
- **The Power Operations Mode sequence has only 10 steps, and will only latch to Step 1, as the sequence is not reversible. Once Step 1 is complete, and a rod in Step 2 is selected, the sequence is updated deleting Step 1 and moving up all the remaining steps. A relatch is then performed against the new Step 1.**
- **Under Power Operations Mode, rod movement is monitored against the current step only.**

Under either mode, CRMS provides appropriate messages for existing error and block conditions required by the MMI, COMTASK and ARCHIVE subsystems.

3.3 REFERENCES

3.3.1 GPUN Oyster Creek, Rod Worth Minimizer, Functional Specification, Document No. 100-8500001-06

- Section 2.6.3, Control Rod Position and Scanning Program
- Section 2.6.4, Sequence Monitoring Program
- Section 2.6.9, RWM Performance Requirements

3.3.2 NEDO-21231, Banked Position Withdrawal Sequence

3.5.2.2 Communications

Communication between the various subsystems of the RWM shall be accomplished through the global tables and RSX message facilities.

3.5.2.3 Timers

The term timer has two connotations within the CRMS routine. The first connotation is associated with the timed intervals mode of execution. Timer as used here refers to a system service call to "wake up" CRMS at a specified

future time through the system mark time service. (See reference 3.3.2). The second connotation occurs in the context of "checking" a timer. Timer as used here requires only a system service call to determine the current time. This type of timer is started by making a call to the TIME service and saving the time returned in a local variable. Subsequent passes of CRMS "check" the timer by making another call to the TIME service and calculating the difference between the current system time and the saved system time. All of these type of timers have an associated time offset. (i.e., T1 and T2 as defined in Chapter 2, Section 2.5.1.10). These timers are said to have expired when the difference between the current and saved system times is greater than the specified offset.

3.5.3 Data Interfaces

CRMS works with data at both the global and local levels to perform the functions required of the CRMS routine.

3.5.3.1 Global Data

At the global level, CRMS is reading from and writing to the current value table (which contains the current value and quality code) as well as the MMI communications tables. The complete list of global variables may be found in Chapter 2 and is not presented here. However, the global variables used by a COS module for input and output are identified within the sections provided below for each individual COS module.

3.5.3.2 Local Data

At the local level, CRMS requires at a minimum one variable per COS module. These variables will be used in one of two ways. For the modules associated with the on-demand type of execution, one pass is needed to process the module completely. In these cases the local variable is set equal to the state of the trigger variable, the conditions are processed, and the module is skipped in subsequent passes until another COS occurs. For the modules associated with the timed intervals execution, multiple passes are required to process the module completely. In these cases, the local variable is set equal to the state of the global variable at the first COS, and the initial pass processing is done. Subsequent passes will perform the timed sequence steps as needed, and the local variable will set equal to the trigger variable only when The trigger variable has returned to it's original value and all requirements of the COS have been met.

3.5.4 Special Interfaces

CRMS shall use distinct modules for checking and enforcement of the Banked Position Withdrawal Sequence (BPWS). Refer to Section 3.2 and Appendix A for a more thorough treatment of BPWS.

3.10.3 Detailed Description

3.10.3.1 Global Inputs

GLOBAL	COMMON VARIABLE	VARIABLE NAME
LDEUG	(PSCRM)	Scram signal
LDEUG	(PDRFT)	Rod drift signal

The scram timer parameter will be used for the ten second timer as described in Chapter 2, Section 2.5.1.10.

3.10.3.2 Global Outputs

None

3.10.3.3 Method

The scram COS module is entered on the first scram COS and on each subsequent pass by CRMS until both the scram and rod drift signals have cleared. Each pass of CRMS performs one of the following submodules. This is a timed interval module.

3.10.3.3.1 Initial COS

On the first detection of the scram signal being set, CRMS retains the set state, starts a ten second timer, and notifies the appropriate tasks through the message facility of the scram.

3.10.3.3.2 Timer

On subsequent passes, CRMS checks the timer until it has expired. At that point, the first of two full core scans is requested.

3.10.3.3.3 Verification

After the initial full core scan, CRMS checks the state of both the scram signal and the rod drift alarm. When both are clear, a second full core scan is requested, a scram reset message is sent through the message facility, and the reset state of the scram signal is retained so that subsequent passes of CRMS will ignore this module until the next scram COS. A check on the local rod drift variable is also performed at this point, and that variable is reset as needed to avoid a third full core scan request from the rod drift COS module.

3.11 ROD DRIFT COS (CRDRFT)

3.11.1 Purpose

The rod drift signal is a field input point converted by the DAS subsystem to a logical variable in global common. The rod drift signal explicitly defines to CRMS that a full core scan and rod block requests are to be made if the rod drift has not cleared within a T1 time period. Additionally, a second full core scan request is to be made after the drift has been clear for a T2 period of time and the first full core scan has been completed. Should the scram and rod drift signals both be present, the scram signal takes precedence.

3.11.2 Requirements

The rod drift status COS module fulfills the following requirements:

- o detects a COS on the rod drift status
- o A message indicative of the rod drift is sent through the message facility
- o employs two time offsets, T1 and T2, to avoid unneeded or excessive full core scans
- o initiates a full core scan at time T1 after the rod drift COS is detected
- o initiates a second full core scan after the rod drift status has been clear for a time T2

3.11.3 Detailed Description

3.11.3.1 Global Inputs

GLOBAL	COMMON VARIABLE	VARIABLE NAME
LDEUG	(PDRFT)	Rod drift signal
LDEUG	(PSCRM)	Scram signal

Note: The T1 and T2 time offsets are incorporated as parameters as defined in Chapter 2, Section 2.5.1.10.

3.11.3.2 Global Outputs

None

3.11.3.3 Method

The rod drift alarm COS will be entered when the rod drift alarm change of state is first detected and on each subsequent pass until the rod drift has cleared satisfactorily. Each pass of CRMS performs one of the following submodules. This is a timed interval module.

3.11.3.3.1 Initial COS

On the first detection of a rod drift COS, a T1 timer is started. the state of the rod drift alarm is retained by CRMS, and the appropriate tasks are notified of the drift through the message facility.

3.11.3.3.2 Drift Determination

On subsequent passes, CRMS checks to see if the T1 timer is expired or the rod drift alarm is cleared. Should the T1 timer expire prior to clearing the rod drift signal. the T2 timer is started and two requests are made. The first request is to the rod blocks request COS to remove the insert and withdraw permissives. The second request is to the full core scan request COS module to initiate a full core scan. Should the rod drift clear before the T1 timer expires, a slow settling control rod is assumed and the drift is determined to have cleared satisfactorily.

3.11.3.3.3 Verification of Position Following Rod Drift

This last submodule is entered on all subsequent passes of CRMS after the T1 timer expiration processing is completed as detailed above. Each pass causes CRMS to check the rod drift status and the T2 timer. The T2 timer is restarted each pass in which the rod drift alarm is not clear. A second full core scan request is made when the first full core scan has completed and the T2 timer has expired. and a request to the rod block COS module is generated for the application of the insert and withdraw permissives.

FILE

Exelon Nuclear

Course/Program:	NUCLEAR PLANT OPERATOR INITIAL	Module/LP ID:	2611-PGD-2621
Title:	©ROD WORTH MINIMIZER	Course Code:	828.0.0041
Author:	N. Boulware	Revision/Date:	04-12/27/02
Prerequisites:	None	Revision By:	N. Boulware
		Est. Teach Time:	~4 hours

Qualified Nuclear Engineer Review (If applicable):		Date:	1/16/03
Training Supervision Review:		Date:	1-16-03
Line Management Approval:		Date:	1/16/03.

OBJECTIVES

From memory unless otherwise indicated and in accordance with the lesson plan, the trainee shall be able to:

Objective #	Objective Description	Pg. #
A. (01)10435	Given plant operating conditions, describe or explain the purpose(s)/function(s) of the system and its components.	2,6,7,14
B. (01)10446	Identify and explain system operating controls/indications under all plant operating conditions.	3-9,11
C. (01)10453	Explain or describe how this system is interrelated with other plant systems.	3,7,17
D. (01)10444	Describe the interlock signals and setpoints for the affected system components and expected system response including power loss of failed components.	4,14
E. (01)10447	Given normal operating procedures and documents for the system, describe or interpret the procedural steps.	8,18,20
F. (01)10451	Given Technical Specifications, identify and explain associated actions for each section of the Technical Specifications relating to this system including personnel allocation and equipment operation.	20

) Copyright 2002 by Exelon Nuclear, All Rights Reserved. Permission for reproduction and use is reserved for Exelon Nuclear. Any other use or reproduction is expressly prohibited without the express permission of Exelon Nuclear.)

Exelon Nuclear

References:

A. Procedures:

1. 201, "Plant Startup"
2. 218, "Operation Below 10% Rated Power with the Rod Worth Minimizer Bypassed or Inoperable"
3. 409, "Operation of the Rod Worth Minimizer"
4. SO #2
5. SO #4
6. 106.11, "Reactivity Management

B. Technical Specifications:

1. Section 3.2.B.2

C. Drawings:

1. BR E015, RWM Patch Panel ER-653-089 Assy & Conn., Rev. 6
2. GE 237E912, RMCS Elementary Diagram, Sheets 1, 4, 5, & 8
3. GE 729E838, RWM System, Sheets. 1, 2, 3
4. GE 706E212, Rod Block Display
5. GU 3E-653-18-1000, RWM Conn. Diagram

D. Other:

1. OCNGS Updated FSAR, Section 7.7.1.3
2. NEDO-21331 "Banked Position Withdrawal Sequence"
3. SOER 84-2
4. LER 90-003 (OTDAITS # 900579)
5. VM-RW-1312, RWM Operator's Manual

Greg Bates

Lesson Description:

Approximately 4 hours of classroom lecture/discussion.

Content/Skills	Activities/Notes
9. CRMS System Status Flags	
a. Initialization Request - initiates CRMS activities required to properly initialize the RWM System.	
b. Full Core Scan Request - used by CRMS to detect performance of core scan by DAS.	
c. Relatch Request – CRMS evaluates the proper sequence step corresponding to present rod positions.	**Relatches to currently loaded rod sequence.**
d. Rod Test Request - CRMS attempts to enter Rod Test mode.	
1) All rods must be fully in.	
2) allows operator to select and withdraw any single control rod regardless of sequence loaded.	
3) allows full utilization of one-rod-out permissive function without bypassing RWM.	
e. Inoperable Rod Request - allows inoperable rods to be removed from normal sequencing requirements. CRMS manages the status of control and operability.	
F. Control Rod Sequencing	**LO B,E**
1. Six separate sequences available - test, shutdown margin, and four standard operating sequences (A1,A2,B1,B2)	
2. Sequences are detailed through an engineer defined sequence (EDS) using sequence editor.	
3. When any A or B sequence is loaded, CRMS checks for conformance to Banked Position Withdrawal Sequence (BPWS) rules.	
4. Engineer Defined Sequence	
a. Stepwise listing of rod withdrawals.	
b. Each step identifies:	
1) a rod or group of rods to be withdrawn (or inserted), and	
2) insert and withdraw limits for rod motion.	
c. EDS always begins from all-rods-in.	

d. Test and shutdown margin sequences - stepwise withdrawal of individual rods.

e. Standard operating sequences - stepwise withdrawal for groups of rods.

5. Banked Position Withdrawal Sequence (BPWS)

a. Set of rules for banked motion of rods in the core, which reduces rod worths to levels consistent with analyzed reactor safety limits.

b. Rules establish constraints for a defined set of ten rod groups.

"Black and white" pattern; rods are alternately full-in and full-out.

1) One set of rules for groups 1 through 4, below 50% rod density,

2) another set of rules for groups 5 through 10, above 50% rod density.

c. EDS is checked for conformance to BPWS when:

1) EDS is edited, and

2) when EDS is loaded into RWM.

Done by CRMS continuously.

6. Sequence Monitoring Operations

LO B

a. Performed by CRMS.

b. CRMS must "latch" to proper sequence step; done by comparing present rod positions to desired rod sequence.

c. When proper sequence step is established, CRMS uses rod block to enforce sequence.

d. Sequence latching performed in-step during normal operations: latched step is increased or decreased based on selection and/or movement of rods by operator.

e. Relatch occurs when proper step is unknown or requires re-evaluation due to changing plant conditions.

1) RWM System initialization

2) RWM System unbypass

3) Following a core scan

Power must be below LPSP.

4) Following correction of insert or withdrawal errors

5) Following rod drift timer expiration

6) Following operator request

7) When power drops below LPAP

8) When power drops below LPSP

Rod drift reset.

f. During relatch, CRMS attempts to determine step by comparing number of rod notches withdrawn to notch withdrawals required by the sequence.

1) If step can be determined without identifying insert or withdrawal errors, relatch is complete.

2) If not possible, step is determined by more detailed search of rod sequence.

g. When insert or withdrawal errors exist, CRMS finds the highest completed sequence step such that:

During relatch.

1) less than three insert errors exist, and

2) at least one rod in the step is withdrawn past the step insert limit.

3) Results in a relatch to highest sequence step allowable without RWM insert block.

h. Once relatch completed, in-step latching is performed.

Conduct Interim Summary.

IV. Controls, Interlocks, and Alarms

A. Control Room Touch-screen CRT Display

LO B
Slide of Figure 41-4

1. Sequence Display Information

   a. Upper left corner of screen provides:

      1) Current sequence step
      2) Group and subgroup identification
      3) Selected rod identification and position
      4) Insert and withdraw limits
      5) Separate block shows loaded sequence.

   b. Upper-center blocks provide:

      1) Rod having insert errors (total of two) or withdraw error (total of one)

      2) Next rod for insert or withdrawal.

   c. Selected rod and position always updated.

   d. Other information only updated during sequence monitoring operations.

2. System Status Indications

   a. Low Power Setpoint (LPSP) - Green when below the LPSP; red when at or above the LPSP.

   b. Rod Scan - Green when no core scan is in progress; red during performance of full core scan.

   c. RWM Bypass - Green when keylock switch is in "NORMAL;" red when the switch is in "BYPASS."

   d. Communication Link - Green when link between RWM and plant computer in functional; red when the link fails.

   e. Select Error - Green with no select error; red when a select error exists.

   f. Insert Block - Green when no insert block exists; red when an inset block develops.

   g. Withdraw Block - Green when no withdraw block exists; red when a withdraw block develops.

Slide of 41-4
Q: How would the operator know a rod scan was in progress?
A: Rod scan button turns red.

3.2 SYSTEM INPUT AND SEQUENCE MONITORING FUNCTION

3.2.1 CRMS Subsystem Functional Overview

The Control Rod Monitor and Scan (CRMS) subsystem provides the means to monitor the change of state of key RWM system inputs and direct performance of the sequence monitoring function. CRMS also serves as a source of RWM system status information required by other RWM software subsystems.

CRMS polls the data maintained in computer memory upon the activation of computer system event flags triggered by DAS. These event flags are used to notify the CRMS subsystem whenever a change of state is detected in RWM system inputs by DAS. In this manner, CRMS determines changes in control rod selection, position and selected system inputs as the changes occur.

System input data monitored by CRMS is generally required to determine the activation of sequence monitoring requirements and identification of necessary sequence monitoring input. However CRMS also performs input monitoring functions of importance for other RWM software subsystems. The CRMS subsystem generates RWM system messages following the change of state of key RWM system inputs which are accessed by both the ARCHIVE and PCS subsystems. As a result, monitoring of RWM system inputs is always maintained by CRMS regardless of the need for sequence monitoring activites.

The CRMS subsystem also performs numerous system input and sequence monitoring functions on demand from other RWM software subsystems. These activities are keyed to changes in RWM system status flags maintained in computer memory.

3.2.2 Input Monitoring Operations

The CRMS subsystem monitors the status of several key system inputs on a continuous basis during RWM system operation. These system inputs include the following:

- Bypass Switch Position
- Low Power Setpoint (LPSP) Status
- Low Power Alarm Point (LPAP) Status
- SCRAM Signal Status
- Rod Drift Signal Status
- Rod Selection Input
- Rod Position Input

The bypass switch position and LPSP/LPAP status inputs are used by CRMS to determine whether sequence monitoring functions are required active. Whenever the system bypass switch is in the "normal" position and power remains below the LPSP, RWM system sequence monitoring activities are required. The CRMS subsystem monitors the sequence of control rod movement by the operator under these conditions and enforces the prescribed rod sequence. As reactor power is increased to a level between the LPSP and LPAP (transition zone), CRMS continues to monitor rod movement but ceases to enforce the sequence. Under operating conditions above the LPAP or whenever the RWM system is placed in bypass, all sequence monitoring functions cease to be active.

The reactor SCRAM and rod drift inputs are used by CRMS to trigger requests for full core scans of control rod position. This ensures that actual control rod positions are reflected in computer memory.

A full core scan of control rod positions is requested by CRMS following a ten second delay after the detection of a rod drift condition. At that point the CRMS subsystem also sets the rod blocks to prohibit control rod motion. A second full core scan is requested following a ten second delay after reset of the control rod drift.

During reactor SCRAM conditions, a subsequent rod drift condition is generally obtained due to control rod overtravel. The CRMS logic processes the reactor SCRAM signal in preference to the rod drift input resulting in a full core scan request from CRMS following a ten second delay after the detection of the reactor SCRAM. A second full core scan is requested following reset of both the SCRAM and rod drift inputs.

Monitoring of control rod selection and position inputs is always maintained by CRMS when the RWM system is in operation. These inputs are monitored in two seperate modes by CRMS. The normal mode of operation is designated as the "operator follow mode". In the operator follow mode, CRMS tracks changes in rod selection and position inputs as they occur during control rod selection and positioning by the operator. The second mode of operation is designated as the "scan mode". In the scan mode, CRMS obtains updated position information for all the control rods in the core following the completion of a full core scan by DAS.

3.2.3 System Status Flag Monitoring

As detailed above, CRMS subsystem operation is also keyed to numerous RWM system status flags. These system status flags include the following:

- Initialization Request Status
- Full Core Scan Request Status
- Relatch Request Status
- Rod Test Request Status
- Inoperable Rod Request Status

An initialization request status flag initiates CRMS program activities required to properly initialize the RWM system. The CRMS subsystem must evaluate initial operating conditions whenever the RWM system is placed on-line (initialized). This initialization request is set by the DAS subsystem when the DAS first begins operation and is used to trigger initial CRMS subsystem operation.

The full core scan request status flag is used by CRMS to detect the performance of scanning activity by the DAS subsystem. This status flag allows CRMS to determine the occurrence of a full core scan regardless of the source of the scan request. CRMS rod position monitoring in the scan mode is triggered by this status flag.

The relatch request status flag is used to request a "relatch" by CRMS to the control rod sequence. A relatch is simply an evaluation of the proper sequence step corresponding to present rod positions. This function is necessary for CRMS to establish the present sequence step during sequence monitoring activities. The relatch request status flag may be set by numerous CRMS subsystem modules or by other RWM software subsystems.

The remaining system status flags are used to request special sequence monitoring activities by CRMS. These request flags are only of importance to CRMs subsystem operation during the performance of sequence monitoring activities.

Upon receipt of a rod test request, CRMS attempts to initiate the RWM system "rod test" mode. This mode of RWM system operation may only be entered if all control rods are fully inserted within the reactor core. Once entered, CRMS will allow the operator to select and withdraw any single control rod regardless of the sequence loaded on the RWM. This allows the operator to fully utilize the one-rod-out permissive function during reactor shutdown conditions without requiring bypass of the RWM system.

Upon receipt of an inoperable rod request by CRMS, the operable status of control rods can be changed for sequence monitoring logic. Inoperable control rods must be removed from the normal sequencing requirements for power operation (ie, Banked Position Withdrawal Sequence). This status flag triggers changes in the status of control rod operability as managed by the CRMS subsystem.

3.2.4 Control Rod Sequencing Constraints

3.2.4.1 General

Any of six seperate sequences may be loaded on the RWM system including special test and shutdown margin sequences as well as the standard operating sequences for power operation (A1,A2,B1 or B2). The control rod sequence is detailed through an engineer defined sequence (EDS) developed using the off-line sequence editor subsystem. Whenever the A or B sequences are loaded at the RWM system, CRMS additionally checks for conformance to Banked Position Withdrawal Sequence (BPWS) rules.

3.2.4.2 Engineer Defined Sequence (EDS)

The engineer defined sequence consists of a stepwise listing of control rod withdrawals. Each step identifies a control rod or group of rods to be withdrawn and the applicable limits for control rod motion. These limits for rod motion are the defined step insert and withdraw limits which establish bounds for rod motion during a sequence step.

The control rod sequence identified through the engineer defined sequence always begins from an all-rods-in condition. The series of steps in the engineer defined sequence establishes a contiguous sequence for the movement of control rods to a target control rod pattern.

Test or shutdown margin sequences are always provided as a stepwise withdrawal sequence of individual control rods. This ensures that the exact sequence for rod movement is maintained under test or shutdown margin conditions.

In contrast, the standard control rod sequences developed for normal power operation are generally provided as a stepwise withdrawal sequence for groups of control rods. The rod grouping utilized in these sequences is generally based on BPWS rod group definitions since these sequences are required to be consistent with BPWS requirements. Each step identifies appropriate insert and withdrawal limits for a defined BPWS group or engineer defined BPWS subgroup.

3.2.4.3 Banked Position Withdrawal Sequence (BPWS)

The Banked Position Withdrawal Sequence consists of a series of rules for the banked motion of control rods within the core (Reference NEDO 21231). The banked withdrawal sequence of control rod groups identified through these rules reduces control rod worths to a level consistent with analyzed reactor safety limits.

The rules establish sequencing constraints for a defined set of ten (10) rod groups within the reactor core. Seperate rules apply for control rod movement both above and below 50 percent control rod density. Below 50 percent control rod density, rod motion is constrained by sequencing requirements for defined BPWS groups 1 through 4. Above 50 percent rod density, rod motion is constrained by sequencing requirements for the remaining control rods defined in BPWS groups 5 through 10.

Normal power operating sequences identified in the engineer defined sequences are checked for BPWS consistency through a user specified sequence step by the sequence editor subsystem. However, the CRMS subsystem also checks to ensure that BPWS sequencing requirements are met when these sequences are loaded on the RWM system. This on-line BPWS checking by CRMS ensures adherence to BPWS rules during normal power operation.

3.2.5 Sequence Monitoring Operations

3.2.5.1 General

Under proper system input conditions described above, the CRMS subsystem directs the sequence monitoring function of the RWM system. The CRMS subsystem monitors the motion of control rods against the desired sequence loaded on the RWM system. Error conditions involving the insertion or withdrawal of control rods are identified by CRMS as they occur and the status of control rod blocks is controlled in computer memory.

During active sequence monitoring operation, the CRMS subsystem must "latch" to the proper sequence step. This process requires the evaluation of present rod positions in comparison to the desired rod sequence. The CRMS subsystem determines the current location within the sequence and existing sequence errors through this process.

Once the proper sequence step is established, the CRMS subsystem controls the status of rod blocks maintained in computer memory to direct the enforcement of the desired rod sequence. Whenever any change is detected in control rod positions which exceeds the bounds established for the sequence (2 insert errors or 1 withdraw error), corresponding control rod motion is blocked except for the correction of existing error conditions. As a result, an insert block condition will occur if more than two rod insert errors are determined to exist and a withdraw block condition will occur with a single withdraw error. The CRMS subsystem provides appropriate messages concerning all existing error and block conditions for the other RWM subsystems.

3.2.5.2 Sequence Latching Logic

Sequence latching activity is performed by the CRMS subsystem in conjunction with the update of control rod position data during both the scan mode and operator follow mode. Following the performance of a full core scan by the RWM system, a relatch to the sequence is performed taking into account the current positions of all rods in the core. During updates of rod position in the operator follow mode, the CRMS subsystem performs in-step latching activity. In-step latching involves the increase or decrease of the latched sequence step based on the selection and/or movement of control rods by the operator.

A relatch to the sequence is generally performed whenever the proper sequence step is unknown or requires reevaluation due to changing plant conditions. Instances in which a relatch is performed by CRMS include the following circumstances:

- RWM system initialization
- RWM system unbypass
- Following any full core scan (power below LPSP)
- Following correction of an existing insert or withdraw error condition
- Following rod drift timer expiration (rod drift reset)
- Following operator request
- When power drops below LPAP
- When power drops below LPSP
- On a timed interval during operation in the Transition Zone (Power between LPSP and LPAP)

During a relatch, the CRMS subsystem first attempts to determine the sequence step by a comparison of the number of control rod notches withdrawn to the notch withdrawals required by the sequence. If the sequence step can be determined in this manner without the identification of rod insert or withdrawal errors, the relatching process is complete. Otherwise, the proper sequence step is determined through a more detailed search of the rod sequence.

When rod insert or withdrawal errors are determined to exist, the CRMS subsystem searches to establish the highest completed sequence step such that less than three insert errors exist and at least one rod in step is withdrawn past the step insert limit. This effectively results in a relatch to the highest sequence step allowable without the occurrence of RWM insert block conditions.

Once a relatch to the sequence is completed, in-step latching is performed by the CRMS subsystem to maintain the proper sequence step during rod motion by the operator.

An increase in the latched sequence step is possible if attempted rod movement by the operator will result in less than three existing insert errors. This effectively allows a step increase by the RWM system only if it can be achieved without the occurrence of an insert block condition.

A decrease in the latched sequence step is possible only if all control rods in the present step have been moved to the associated step insert limit. This effectively allows a step decrease by the RWM system only if it can be achieved without the occurrence of a rod withdraw block condition.

3.2.5.3 Sequence Error and Rod Block Logic

Sequence error and rod block conditions are determined by the CRMS subsystem using a defined set of sequence monitoring logic. The logic used by the CRMS subsystem establishes absolute definitions of sequence error and block conditions as detailed below.

The three error conditions identified through sequence monitoring activity consist of control rod selection, insert and withdrawal errors. Precise definitions for each of these error conditions are provided in Appendix 1 of this manual but are repeated here for further clarification.

A select error exists whenever the control rod selected by the operator is determined to be outside of the currently loaded sequence (allowable latched step). The CRMS subsystem evalutes rod selection by the operator to ensure that the rod selected for motion meets either of two conditions. The control rod must either be within the current latched step or be within the next highest or next lowest step allowable through in-step latching requirements. Otherwise a rod selection error exists.

Rod insertion errors exist whenever a control rod is inserted to a position less than the insert limit for the last sequence step in which the control rod was defined. Insert errors can therefore be produced for rods positioned in the present sequence step or any previously completed sequence step.

Rod withdrawal errors exist whenever a control rod is withdrawn to a position beyond the last step in which the control rod was defined. If the control rod was not defined within the sequence up through the latched step, the rod must remain fully inserted or be defined as a withdraw error. A rod withdrawal error can therefore be produced for any control rod in the core with the exception of any fully withdrawn in-sequence rods.

The rod block logic employed by the CRMS subsystem is based upon the number of insert and/or withdraw errors which exist as defined above. As described earlier, when error conditions exist which exceed the bounds established for the sequence (2 insert errors or 1 withdrawal error), rod blocks are initiated by CRMS. Only corrective motion of control rods is allowed to clear existing errors under these circumstances.

Specific rod sequence conditions which cause a rod insert block during conditions requiring sequence enforcement may be summarized as follows:

- o There is an existing rod withdrawal error resulting in a rod withdrawal block condition and the operator is not attempting its correction (operator has selected a rod differing from the withdraw error rod).
- o Three insert errors have been produced by the operator during control rod motion.

Specific rod sequence conditions which cause a rod withdraw block during conditions requiring sequence enforcement may be summarized as follows:

- o There are three existing rod insert errors resulting in a rod insert block condition and the operator is not attempting their correction (operator has selected a rod differing from any of the three insert error rods).
- o A withdraw error has been produced by the operator during control rod motion.
- o One or more rod withdrawal errors are determined to exist upon system initialization, system unbypass or power reduction below the LPSP.

3. Other Indications

- Red scram light lit on the full core display for the affected rod.
- Control rod position indicates blank with green backlighting on full core display.
- One divisional group of scram solenoid lights **not** lit on Panels 4F **and** 6R or 7R.
- Accumulator LOW PRESS/HI LEVEL alarm on 5F/6F.

[redacted]

then **PERFORM** the following:

[redacted] [ ]

2. **ISOLATE** the associated HCU in accordance with Procedure 302.1, Control Rod Drive Hydraulic System. [ ]

3. **MONITOR** the following parameters for indications of fuel failure:

   - Off-gas activity [ ]
   - Reactor coolant activity [ ]
   - Main steam line radiation [ ]

4. **NOTIFY** Reactor Engineering of the abnormal rod motion. [ ]

5. **CONSULT** Technical Specifications, Section 3.2 [ ]

Group Heading CONTROL RODS/DRIVES ROD CNTRL	H-6-a

ROD DRIFT

CAUSES:	SETPOINTS:	ACTUATING DEVICES:
Any of the Control Rods drifting more than 3" through an odd rod position, when the Control Rod is not selected.	Actuation of odd numbered position switch on non-selected control rod.	AR2-1, AR2-2, AR2-3, AR2-4
		Reference Drawings: GE 148F481 GU 3E-611-17-010

CONFIRMATORY ACTIONS:

Check Control Rod position indication on Panel 4F.

AUTOMATIC ACTIONS:

NONE

MANUAL CORRECTIVE ACTIONS:

If more than one Control Rod is moving in or out abnormally, scram the reactor in accordance with 2000-ABN-3200.01, Reactor Scram. If single rod unintended motion is indicated (insert or withdrawal), perform the actions defined in 2000-ABN-3200.06, Abnormal Control Rod Motion, as appropriate.

65) (3920) A RWM Rod Withdrawal Block can occur when:

A. Two insert errors exist and attempts to withdraw a rod other than that producing the insert errors.
B. Selecting a rod to be withdrawn that is not in the currently loaded sequence
C. Three Insert Errors exist and a rod is selected other than that producing the errors.
D. Selecting a Rod to be inserted that is not in the currently loaded sequence.
C.

66) (3921) Following a rod drifting in, the RWM will "relatch". CRMS will locate the highest completed step that meets the following criteria:

A. less than three insert errors and AT LEAST two rods are withdrawn past the insert limit.
B. NO insert errors and AT LEAST one rod is withdrawn past the insert limit.
C. LESS THAN three insert errors and AT LEAST one rod is withdrawn past the insert limit.
D. NO insert errors and NO withdraw errors exist.
C.

67) (3922) In regards to the RWM, a core scan will occur as a direct result of:

A. immediately after control rod relatch
B. immediately after power increases above the LPAP
C. immediately after scram is reset
D. immediately after after rod drift is reset.
C.

68) (3923) A control rods position that has been substituted by the RWM will:

A. be passed on to the Plant Computer and remain substituted until the next operator requested core scan.
B. only affect the RWM display and remain substituted until the next operator requested core scan.
C. be passed on to the Plant Computer and remain substituted until the operator deletes the substitute value.
D. only affect the RWM display and remain substituted until the operator deletes the substitute value.
C.

69) (3924) The power supply to the RWM computer subsystem is

N/A

	OYSTER CREEK GENERATING STATION PROCEDURE	Number ABN-6	
Title		Usage Level	Revision No.
Control Rod Drive System		**1**	0

Prior Revision 0 incorporated the following Temporary Changes:

This Revision 0 incorporates the Following Temporary Changes:

List of Pages

1.0 to 26.0

	OYSTER CREEK GENERATING STATION PROCEDURE	Number **ABN-6**
Title **Control Rod Drive System**		Revision 0

CONTROL ROD DRIVE SYSTEM

Section	Abnormality
3.1	One Control Rod Moving IN.
3.2	One Control Rod Moving OUT.
3.3	More Than One Control Rod Moving IN **or** OUT.
3.4	Uncoupled Rod.
3.5	All Control Rods Will **Not** Move.
3.6	An Individual Control Rod Will **Not** Move.
3.7	A Rod Can Be Inserted **But** Will **Not** Withdraw.
3.8	Rod Moved One Notch Beyond Intended Position.
3.9	Rod Drifts In Following Insert Signal.
3.10	Rod Drifts Out Following Withdraw Signal
3.11	A Group of Control Rods Scram During ½ Scram Testing.
3.12	A Single Rod Scrams During ½ Scram Testing.
3.13	CRD Pump Low Suction Pressure.

For the following CRD System Anomalies refer to Procedure 235, Determination and Correction of Control Rod Drive System Problems.

- Slow or Sluggish Rod Movement
- Control Rod Fails to Settle **or** Settles Slowly.
- A Control Rod Fails To Insert Fully On a Scram.
- Control Rod Drive Temperature High.
- Abnormal Drive Header Pressure.
- Abnormal Cooling Header Pressure.
- High Differential Pressure Across CRD Supply Filter.
- Abnormal CRD Charging Header Pressure.
- Low Hydraulic Accumulator Gas Pressure.

	OYSTER CREEK GENERATING STATION PROCEDURE	Number **ABN-6**
Title **Control Rod Drive System**		Revision 0

- Excessive Water Leakage to the Gas Side of an HCU.
- Scram Discharge Volume High Water Level.
- Low Instrument Air System Supply Pressure.
- Scram Valve Fails to Open On a Scram Signal.
- One **or** More Scram Valves Fail To Close Upon Scram Reset.
- SDV Vent and Drain Valves Fail To Close On a Scram Signal.
- CRD To CRD Housing Flange Leakage.

1.0 APPLICABILITY

This procedure applies to abnormal conditions associated with the Control Rod Drive Hydraulic System **and** Control Rod Drive Mechanism.

2.0 INDICATIONS

See applicable sections for indications.

	OYSTER CREEK GENERATING STATION PROCEDURE	Number ABN-6
Title	Control Rod Drive System	Revision 0

3.0 **OPERATOR ACTIONS**

If while executing this procedure, any entry condition for an Emergency Operating Procedure (EOP) occurs,

then immediately **EXIT** this procedure **and ENTER** the appropriate EOP.

3.1 **One Control Rod Moving IN**

3.1.1 Indications

1. Annunciators

Engraving	Location	Setpoint
ROD DRIFT	H-6-a	

2. Plant Parameters

Parameter	Location	Change
Timer malfunction rod block	Rod Block Matrix	Blue light lit
Reactor power, SRM, IRMs, LPRMs or APRMs	4F	Lowering
Gross MWe	8F	Lowering
Changing rod position on RWM display **or** full core display	4F	Moving toward '00'
Reactor Period	4F	Moving toward ∞
Rod Block	Rod Block Matrix	Lit

3. Other Indications
   - Red scram light lit on the full core display for the affected rod.
   - Control rod position indicates blank with green backlighting on full core display.

	OYSTER CREEK GENERATING STATION PROCEDURE	Number **ABN-6**
Title **Control Rod Drive System**		Revision 0

- One divisional group of scram solenoid lights **not** lit on Panels 4F **and** 6R or 7R.
- Accumulator low press/hi level alarm on 5F/6F.

3.1.2 **If** one control rod is moving in,

then **PERFORM** the following:

1. **SELECT** the rod **and APPLY** a continuous insert signal to position 00. [ ]
2. **ISOLATE** the associated HCU in accordance with Procedure 302.1, Control Rod Drive Hydraulic System. [ ]
3. **MONITOR** the following parameters for indications of fuel failure:
   - Off-gas activity [ ]
   - Reactor coolant activity [ ]
   - Main steam line radiation [ ]
4. **NOTIFY** Reactor Engineering of the abnormal rod motion. [ ]
5. **CONSULT** Technical Specifications, Section 3.2 [ ]

not a checked step

3.2 **One Control Rod Moving out**

3.2.1 Indications

1. Annunciators

Engraving	Location	Setpoint
ROD DRIFT	H-5-a	

	OYSTER CREEK GENERATING STATION PROCEDURE	Number ABN-6
Title	Control Rod Drive System	Revision 0

2. Plant Parameters

Parameter	Location	Change
Timer malfunction rod block	Rod Block Matrix	Blue light lit
Reactor power, SRMs, IRMs or APRMs	4F	Rising
Reactor period	4F	Becoming shorter (toward 0 sec)
Gross MWe	8F	Rising
Changing rod position on RWM **and** 4F full core display	4F	Moving toward 48 (full out)

3. Other Indications

- The affected control rod may reach the full out position **and** is red backlit.

3.2.2 **If** one control rod is moving out,

then **PERFORM** the following:

1. **If** a timer malfunction is indicated,

then **PERFORM** the following:

A. **APPLY** an EMERG ROD IN signal using the NOTCH OVERRIDE switch. [ ]

B. **When** the rod is returned to it's programmed position, **then** **PLACE** the ROD POWER switch to OFF. [ ]

C. **REMOVE** the EMERG ROD IN signal. [ ]

D. **If** outward rod motion continues, [ ]

then **RE-APPLY** the EMERG ROD IN signal.

1.

APPLY a continuous insert signal to the rod.

E. **SCRAM** the affected control rod in accordance with Procedure 302.2, Control Rod Drive Manual Control System. [ ]

F. **REMOVE** the EMERG ROD IN signal. [ ]

G. **ISOLATE** the associated HCU in accordance with Procedure 302.1, Control Rod Drive Hydraulic System. [ ]

H. **MONITOR** the following for fuel failure: [ ]

- Off-gas activity [ ]
- Reactor coolant activity [ ]
- Main steam line radiation [ ]

2. **If** a timer malfunction is **not** indicated,

then **PERFORM** the following:

A. **APPLY** an insert signal to the control rod. [ ]

B. **When** the rod is returned to its programmed position, [ ]

then **REMOVE** the insert signal.

C. **If** outward rod motion continues, [ ]

then **PERFORM** the following:

[
]

2. **SCRAM** the affected rod in accordance with Procedure 302.2, Control Rod Drive Manual Control System. [ ]

3. **ISOLATE** the associated HCU in accordance with Procedure 302.1, Control Rod Hydraulic System. [ ]

4. **REMOVE** the INSERT signal. [ ]

D. **If** outward rod motion continues (indicating stuck collet fingers), [ ]

then **RETURN** the isolated HCU to service in accordance with Procedure 302.1.

1. **HOLD and MAINTAIN** the control rod at position 00 with a continuous insert signal. [ ]
2. **FREE** the stuck collet in accordance with Procedure SDRP 3024.08, Attachment 1 [ ]

E. **MONITOR** the following for indications of fuel failure: [ ]

- Off-gas activity [ ]
- Reactor coolant activity [ ]
- Main steam line radiation [ ]

F. **NOTIFY** Reactor Engineering of the abnormal rod motion. [ ]

More Than One Rod Moving IN or OUT

	OYSTER CREEK GENERATING STATION PROCEDURE	Number **ABN-6**
Title **Control Rod Drive System**		Revision 0

3.3

3.3.1 Indications

- More than one rod **not** selected for insertion **or** withdrawal is moving as indicated on the full core display. [ ]

3.3.2 **If** more than one control rod is inadvertently moving in **or** out, [ ]

then SCRAM the reactor **and ENTER** ABN-1.

3.3.3 **MONITOR** the following for indications of fuel failure: [ ]

- Off-gas activity [ ]
- Reactor coolant activity [ ]
- Main steam line radiation [ ]

3.3.4 **REFER** to Procedure 235, Determination and Correction of Control Rod Drive System Problems. [ ]

Uncoupled Rod

	OYSTER CREEK GENERATING STATION PROCEDURE	Number **ABN-6**
Title **Control Rod Drive System**		Revision 0

3.4

3.4.1 Indications

1. Annunciators

Engraving	Location	Setpoint
ROD DRIFT	H-6-a	

2. Plant Parameters

Parameter	Location	Change
Timer malfunction rod block	Rod Block Matrix	Blue light lit
Changing reactor power	4F	Rising
RWM rod block	4F	RWM display
Changing rod position	4F	Full core display

3.4.2 **If** a control rod is uncoupled **and** reactor power is <10%, [ ]

then **APPLY** a continuous **INSERT** signal to the rod until the rod indicates position 00.

1. **If** the rod can **not** be inserted to 00, [ ]

   then **SCRAM** the rod in accordance with Procedure 302.2, Control Rod Drive Manual Control System.

2. **If** the rod can **not** be scrammed, [ ]

   then **SCRAM** the reactor **and ENTER** ABN-1.

3. **NOTIFY** Reactor Engineering of the event. [ ]

3.4.3 **If** a control rod is uncoupled **and** reactor power >10%, [ ]

then **SELECT** the control rod **and APPLY** a continuous insert signal until:

	OYSTER CREEK GENERATING STATION PROCEDURE	Number **ABN-6**
Title **Control Rod Drive System**		Revision 0

1. A response **is observed** on the Nuclear Instruments, **or** the rod is **CONFIRMED** fully inserted. [ ]

> NOTE: **If** the programmed position for the affected rod is **not** position 48,
>
> **then** Reactor Engineering guidance will be required to move the rod to position 48 for a coupling check.

2. **NOTIFY** Reactor Engineering prior to proceeding to the next step. [ ]

> NOTE: **If** a response is **not** indicated on the Nuclear Instruments, the control rod blade may be uncoupled and stuck.

3. **MONITOR** nuclear instrumentation response while withdrawing the affected control rod to position 48. [ ]

4. **APPLY** a continuous withdraw signal at position 48 **and VERIFY** the following: [ ]
   - ROD OVERTRAVEL (H-5-a) is **not** alarming. [ ]
   - Control rod position display indicates 48. [ ]

3.4.4 **If** the control rod is re-coupled, [ ]

then **COORDINATE** with Reactor Engineering **and RETURN** the rod to its programmed position.

3.4.5 **If** the affected control rod can **not** be **re-coupled**, [ ]

then **INSERT** the rod to position 00 **and ISOLATE** the affected HCU in accordance with Procedure 302.1, Control Rod Drive Hydraulic System.

	OYSTER CREEK GENERATING STATION PROCEDURE	Number **ABN-6**
Title **Control Rod Drive System**		Revision 0

3.4.6 **If** the affected rod can **not** be moved with control rod drive pressure **or** can **not** be re-coupled, [ ]

then **consult** Technical Specifications, Section 3.2.

3.4.7 **REFER** to Procedure 235, Determination and Correction of Control Rod Drive System Problems. [ ]

All Control Rods Will Not Move (Panel 4F) **and** a Nuclear Instrumentation response is **not** observed for any rod that is selected for movement.

	OYSTER CREEK GENERATING STATION PROCEDURE	Number **ABN-6**
Title **Control Rod Drive System**		Revision 0

3.5

3.5.1 Indications

1. **VERIFY** that **no** Control Rod Blocks are in effect. [ ]
2. **If** CRD DRV WTR PRESS indicates less than 250 psid, [ ]

   then **RESTORE** drive water pressure to 250 psid.
3. **If** the scram valves remained open after resetting the scram, [ ]

   then refer to procedure 235.
4. **VERIFY** circuit breaker 1, IP 4A is CLOSED. [ ]
5. **VERIFY** circuit breakers CB2A through CB2H on rack ER-2 are CLOSED. [ ]
6. **If** the timing sequence is **not** indicated as follows, [ ]

   then the automatic sequence timer contacts **REQUIRE** adjustment.

OYSTER CREEK GENERATING STATION PROCEDURE	Number
	ABN-6
	Revision
Control Rod Drive System	0

WITHDRAWAL	INSERT				
[ ]					
[ ]					
[ ]					

7. **If** all attempts to withdraw the rods are unsuccessful, [ ]

   then **REFER** to Procedure 235, Determination and Correction of Control Rod Drive System Problems.

Rod position Control Rod Will Not Move change when an INSERT **or** WITHDRAW signal is applied **and** a Nuclear Instrumentation system response is **not** observed

	OYSTER CREEK GENERATING STATION PROCEDURE	Number **ABN-6**
Title **Control Rod Drive System**		Revision 0

3.6

3.6.1 Indications

3.6.2 **VERIFY** that **no** Control Rod Blocks are in effect. [ ]

3.6.3 **If** the pushbutton for the rod is **not** lit on the rod select matrix, **or** the white light on the full core display for the rod is **not** lit, [ ]

then **SELECT** the control rod by depressing the correct button on the rod select matrix.

3.6.4 **If** the pushbutton for the rod is **not** lit on the rod select matrix **when** a rod is selected **and** the rod out permissive indicating light is **not** lit,

then **VERIFY** the following:

- ROD POWER switch is ON
- Breaker #1 on IP-4A is CLOSED. [ ]
- Breaker #5 on CIP-3 is CLOSED. [ ]
- IP-4A is energized. [ ]
- Fuses 4F1, 4F2 **and** 4F3 (Panel 4F) are **not** blown. [ ]
- Rod Selector relay is operating properly. [ ]
- Pushbutton selector switch is **not** defective. [ ]

R

[illegible] affected drive in accordance with Procedure 302.2.

	OYSTER CREEK GENERATING STATION PROCEDURE	Number **ABN-6**
Title **Control Rod Drive System**		Revision 0

3.6.5 **If** for a rod insertion, CRD DR WTR FLOW fails to increase to 4 gpm,

or for a rod withdrawal, CRD DR WTR FLOW fails to increase to 2 gpm,

then **PERFORM** the following:

[
]

2. **VERIFY** that control power is available (IP-4A, Breaker #1). [ ]

3.6.6 **If** a control rod will **not** withdraw from the 00 position,

then **PERFORM** the following:

1. **APPLY** an INSERT signal for about 2 minutes **and** **ATTEMPT** to WITHDRAW the rod. [ ]
2. Alternately **APPLY** WITHDRAW **and** INSERT signals in the NOTCH OVERRIDE mode. [ ]
3. **If** repeated attempts to withdraw the rod are unsuccessful,

   then **PERFORM** the following:

   [
   ]

   [
   ]

   C. **ATTEMPT** to withdraw the affected rod. [ ]
4. **If** the rod will **not** withdraw,

   then **PERFORM** the following:

   A. **RAISE** drive water pressure to 390 psid. [ ]

   B. **APPLY** one individual scram signal to the affected rod in accordance with Procedure 302.2. [ ]

   C. **ATTEMPT** to withdraw the affected rod. [ ]

	OYSTER CREEK GENERATING STATION PROCEDURE	Number ABN-6
Title	Control Rod Drive System	Revision 0

5. **If** the affected rod will **not** move,

   then **PERFORM** the following:

   A. **OBTAIN** concurrence from the system engineer to raise drive pressure to 450 psid. [ ]

   B. **STATION** an operator at the local CRD drive pressure control station. [ ]

   C. **RAISE** drive pressure in 15 psid increments **while PERFORMING** the following:

      1. **APPLY** one individual scram signal to the affected drive in accordance with Procedure 302.2. [ ]

      2 **ATTEMPT** to withdraw the control rod. [ ]

6. **If** the rod will **not** move with 450 psid drive pressure applied,

   then **PERFORM** the following:

   A. **SCRAM** the affected rod in accordance with Procedure 302.2. [ ]

   B. **VALVE** out the HCU in accordance with Procedure 302.1, Control Rod Drive Hydraulic System. [ ]

   C. **CONSULT** Technical Specification, section 3.2 [ ]

7. **REFER** to Procedure 235, Determination and Correction of Control Rod Drive System Problems. [ ]

A Rod Can Be Inserted But Will Not Withdraw as indicated by **no** change in rod position **and no** nuclear instrumentation system response.

	OYSTER CREEK GENERATING STATION PROCEDURE	Number **ABN-6**
Title **Control Rod Drive System**		Revision 0

3.7

3.7.1 INDICATIONS

1. **VERIFY** that **no** Rod Blocks are in effect. [ ]

2. **VERIFY** that V-305-102 **and** V-305-123 are OPEN [ ]

3. **If** CRD DR WTR PRESS indicates <250 psid, [ ]

   then **ADJUST** to 250 psid.

4. **If** the affected rod will **not** withdraw, [ ]

   then **RAISE** drive water pressure to 300 psid.

5. **ATTEMPT** to withdraw the affected rod. (Repeated attempts at this drive pressure are allowed to free the stuck rod.) [ ]

6. **If** the affected rod will **not** withdraw, [ ]

   then **RAISE** drive water pressure to 350 psid.

7. **ATTEMPT** to withdraw the affected rod. (Repeated attempts at this drive pressure are allowed to free the stuck rod.) [ ]

8. **If** the affected rod will **not** withdraw, [ ]

   then **RAISE** drive water pressure to 390 psig.

9. **ATTEMPT** to withdraw the affected rod. (Repeated attempts at this drive pressure are allowed to free the stuck rod.) [ ]

10. **If** the affected rod will **not** withdraw,

    then **PERFORM** the following:

A. **OBTAIN** concurrence from the system engineer to raise drive pressure to 450 psig. [ ]

B. **STATION** an operator at the local drive water pressure gauge. [ ]

C. **RAISE** drive pressure in 15 psig increments **and ATTEMPT** to withdraw the affected rod after each incremental pressure adjustment. [ ]

11. **If** the affected rod will **not** withdraw,

then **PERFORM** the following:

A. **SCRAM** the affected rod in accordance with Procedure 302.2. [ ]

B. **VALVE** the rod out of service in accordance with Procedure 302.1, Control Rod Drive Hydraulic System. [ ]

C. **CONSULT** Technical Specifications, Section 3.2. [ ]

12. **REFER** to Procedure 235, Determination and Correction of Control Rod Drive System Problems. [ ]

3.8 Rod Moved One Notch Beyond Intended Position

3.8.1 INDICATIONS

A control rod has inadvertently moved one notch beyond its intended position; i.e. double-notched.

1. **If** CRD DR WTR PRESS is >250 psid, [ ]

then **RESTORE** drive water pressure to 250 psid.

	OYSTER CREEK GENERATING STATION PROCEDURE	Number **ABN-6**
Title **Control Rod Drive System**		Revision 0

2. **If** the control rod has moved one notch beyond its intended position, [ ]

   then **single notch** the rod to its intended position.

3. **If** the control rod continues to double notch, [ ]

   then **REFER** to Procedure 235, Determination and Correction of control Rod Drive System Problems.

	OYSTER CREEK GENERATING STATION PROCEDURE	Number **ABN-6**
Title **Control Rod Drive System**		Revision 0

3.9 **Rod Drifts In following insert signal**

3.9.1 INDICATIONS

- A control rod drifts in to position 00 following the application and removal of an INSERT signal.
- ROD DRIFT (H-6-a) alarms.

1. **If** a control rod drifts in with <u>no</u> INSERT signal applied **or** outward motion occurs with the affected rod's HCU isolated,

   then **PERFORM** the following:

   A. **APPLY** and **MAINTAIN** a continuous INSERT signal to hold the rod at position 00. [ ]

   B. **ISOLATE** the associated HCU in accordance with Procedure 302.1, Control Rod Drive Hydraulic System. [ ]

   C. **MONITOR** the following parameters for indications of fuel failure:

   - Off-gas activity [ ]
   - Reactor coolant activity [ ]
   - Main steam line radiation [ ]

   D. **NOTIFY** Reactor Engineering of the abnormal rod motion. [ ]

   E. **CONSULT** Technical Specifications, Section 3.2 [ ]

	OYSTER CREEK GENERATING STATION PROCEDURE	Number ABN-6
Title	Control Rod Drive System	Revision 0

3.10 **Rod DriftS Out following withdraw signal**

3.10.1 INDICATIONS

- A control rod withdraws without a withdraw signal applied.
- ROD DRIFT (H-6-a) alarms

3.10.2 **APPLY** a NOTCH IN signal **and OBSERVE** that the rod stops moving (drive remains in position and collet latches). [ ]

1. **If** the rod has stopped moving, [ ]

   then INFORM Reactor Engineering of the event.

3.10.3 **DO NOT MOVE** the rod **until** all administrative procedural requirements have been met **and** Reactor Engineering has been **CONSULTED**. [ ]

3.10.4 **MONITOR** off-gas activity, main steam line radiation **and** reactor coolant activity for evidence of fuel failure. [ ]

3.10.5 **If** the rod continues to drift out, [ ]

then SCRAM the rod using its individual rod scram test switch on Panel 6XR.

	OYSTER CREEK GENERATING STATION PROCEDURE	Number ABN-6
Title	Control Rod Drive System	Revision 0

3.11 **A Group of Control Rods Scram During ½ Scram Testing**

3.11.1 INDICATIONS

- Reactor power lowering
- Approximately 34 rods insert to position 00.

3.11.2 **SCRAM** the reactor **and ENTER** ABN-1. [ ]

3.11.3 **REFER** to Procedure 235, Determination and Correction of Control Rod Drive System Problems. [ ]

3.12 **A Single Control Rod Scrams During ½ Scram Testing**

3.12.1 INDICATIONS

The red scram light for a rod is lit with the rod position indication back lit green.

3.12.2 **VERIFY** no other rod movement has occurred. [ ]

3.12.3 **SECURE** from ½ scram testing. [ ]

3.12.4 **DECLARE** the affected rod inoperable **and ISOLATE** in accordance with Procedure 302.1, Control Rod Drive System. [ ]

3.12.5 **NOTIFY** Reactor Engineering of the event. [ ]

3.12.6 **MONITOR** the following for evidence of fuel failure:

- Main Steam Line Radiation [ ]
- Offgas Activity [ ]
- Reactor Coolant Activity [ ]

3.12.3 **REFER** to Procedure 235, Determination and Correction of Control Rod Drive System Problems. [ ]

3.13 CRD Pump Low Suction Pressure Trip

3.13.1 INDICATIONS

SUCT PRESS LO PUMP TRIP (H-3-c) in alarm.

	OYSTER CREEK GENERATING STATION PROCEDURE	Number ABN-6
Title	Control Rod Drive System	Revision 0

3.13.2 **If** the operating CRD pump tripped, [ ]

then **START** the standby CRD pump **or**

RESTART the previously running pump provided there is no overload.

3.13.3 **If** reactor pressure is less than 850 psig **and** charging water pressure can **not** be immediately re-established, [ ]

then **SCRAM** the reactor **and EXECUTE** ABN-1.

3.13.4 **If** reactor pressure is greater than 850 psig [ ]

and

charging water pressure can **not** be re-established

and

2 or more accumulator trouble alarms are received (accumulator level/press rod block light is lit),

then **SCRAM** the reactor **and EXECUTE** ABN-1.

3.13.5 **If** the operating CRD pump did **not** trip, [ ]

then **REFER** to Procedure 235, Determination and Correction of Control Rod Drive System Problems.

3.13.6 **DISPATCH** an operator to check for system leaks. [ ]

4.0 **REFERENCES** - None

5.0. **ATTACHMENTS** - None

QUESTION #47

Given the following conditions:

- Immediately following a loss of all offsite power you are the reactor operator and observe one control rod at position 48 with the remaining control rods at 00.
- Ten seconds later both emergency buses are energized from Diesel Generators (EDGs).

Which of the following describes the affect on IRM/APRM indications?

A. Lose IRM/APRM indications due to loss of PSP-1&2.

B. Maintain IRM/APRM indications due to DC power supply available.

C. Lose IRM/APRM indication due to loss of vital buses and RPS MG set voltage.

D. Maintain IRM/APRM indications due to re-powered busses and RPS MG set flywheels.

Answer: B

Question 47: Oyster Creek's position

The question asks:

"Given the following conditions:

- Immediately following a loss of all offsite power you are the reactor operator and observe one control rod at position 48 with the remaining control rods at 00
- Ten seconds later both emergency buses are energized from diesel generators (EDGs)

Which of the following describes the affect on IRM/APRM indications?"

Regarding the IRM/APRM circuitry and indications, the following sources of power exist:

- ± 24 VDC, which powers the IRM and APRM detector circuitry as well as indications on the respective IRM and APRM drawers (Panels 3R and 5R) and IRM/APRM power indication on Panel 4F recorders. Battery chargers powered from IP-4 are the normal source, with the batteries as backup.
- CIP-3, which provides IRM and APRM recorder power on Panel 4F and IRM trip units for rod blocks and scrams. CIP-3 is powered from a rotary inverter. Normal power to the rotary inverter is an AC motor powered from VMCC 1B2, with a backup DC motor powered from DC-B. The rotary inverter is "normal seeking" and will shift back to the AC motor once steady power is restored to VMCC 1B2 for 2 minutes.
- RPS bus 1 and 2, which powers trip circuitry and RPS trip units associated with the respective APRM drawers, and power to the LPRMs. As long as the LPRMs have power, their inputs to the APRM drawers will reflect actual reactor power.

For RPS buses 1 and 2, the RPS MG set flywheels <u>will</u> maintain power long enough for the EDGs to start and re-power 1C and 1D buses. The basis for this is presented below.

In a memo dated January 11, 1996 regarding loss of RPS power during LOOP, the RPS engineer provided the following information. (Copy of memo is enclosed)

- Upon a loss of offsite power with a successful anticipatory scram, the RPS MG set output breaker and Electrical Protection Assemblies will trip on under-frequency or under-voltage in approximately 15 seconds.
- Upon a loss of offsite power with no anticipatory scram, the RPS MG set output breaker and EPAs will trip on under-frequency or under-voltage in approximately 4 seconds.

Based upon the question stem, a successful scram has occurred, therefore RPS MG set flywheels will maintain power to the RPS buses for up to 15 seconds. The information states the EDGs repower the 1C and 1D buses within 10 seconds of the power loss, so RPS is not lost during this transient.

Looking at the possible answers, neither answer "A" or answer "C" can be a correct statement. Both of these answers address losing indications either due to loss of PSP-1

and 2 (RPS-1 and 2), or due to loss of vital buses and RPS MG set voltage. Since RPS MG set voltage is not lost during this transient, neither of these statements can be correct.

Answer "B" is a correct statement based upon the following. DC power supplies (± 24 VDC and DC-B for the CIP-3 drive motor) are available throughout the transient.

Answer "D" is a correct statement based upon the following. All vital buses will be re-powered when the EDG breakers close 10 seconds after the loss of offsite power. The RPS buses will never lose power due to the design of the RPS MG set flywheels.

Therefore, answers "B" and "D" are correct statements and IRM/APRM indications are maintained throughout the stated transient.

Oyster Creek recommendation: Accept "B" and "D"

References: RAP 9XF-5-c, CIP-3 INV AC INP LOST (sent previously)
GPUN Memo 2252-96-001, dated January 11, 1996 (sent previously)

Group Heading	
VITAL POWER AC XFERS	9XF-5-c

CIP-3 INV AC INP LOST

CAUSES:	SETPOINTS:	ACTUATING DEVICES:
DC drive motor for continuous instrument panel supply generator running. This indicates loss of power or trip of the AC power.	DC Drive motor running	2MS
		Reference Drawings: BR 3013, Sh. 1 GE 3300C15A3164 GU 3E-611-17-022

CONFIRMATORY ACTIONS:

DC Drive light is "ON" at CIP-3 Rotary Inverter Control Panel.

AUTOMATIC ACTIONS:

Inverter switches to DC drive.

Once in DC-RUN, the rotary Inverter will transfer back to AC DRIVE, after a 2 minute time delay, when the start selector switch is placed in the AUTO RUN position.

MANUAL CORRECTIVE ACTIONS:

Correct cause as necessary and return AC motor to service.

Reference Procedure 339, "Vital Power System".

GPU Nuclear

Memorandum

Subject: Loss of RPS Power During LOOP

Date: January 11, 1996

From: J. P. Munley
RPS Engineer

Location: Oyster Creek
2252-96-001

To: J. Vaccaro
Instructor Nuclear IV

Per our discussions, the following provides a description of RPS MG Set flywheel design and operation and will serve as input in modeling the Simulator for a loss of offsite power.

The RPS Motor Generator Set flywheel is designed to mitigate a 2 second supply voltage interruption with a drop of output voltage and frequency of less than 5% and recovery to steady state regulation after restoration of rated supply voltage within 2 seconds. Experience has shown that the output voltage and frequency drop following a loss of MG Set supply power is load dependant. For higher loads, the output voltage and frequency degrade more quickly than for lower loads, when the output voltage and frequency degrade more slowly.

The RPS will, therefore, trip at different times upon a loss of supply power depending upon the load on the MG Set.

1. Upon a loss of offsite power with a successful anticipatory scram, the RPS MG Set output breaker and Electrical Protection Assemblies will trip on under-frequency or under-voltage in approximately 15 seconds.

2. Upon a loss of offsite power with no anticipatory scram, the RPS MG Set output breaker and electrical protection assemblies will trip on under-frequency or under-voltage in approximately 4 seconds.

The difference in the response of the RPS MG Set output upon a loss of supply voltage described above depends on whether the anticipatory scram signal is received or not. This is the result of the difference in RPS load pre-scram versus post-scram. After a scram, the RPS load is greatly reduced due to the de-energization of the scram pilot solenoid valves, the scram contactors, and the Condenser Low Vacuum or Turbine Trip control relays.

This description provides the necessary details of RPS MG Set output design and operation during a loss of offsite power to allow approximate modeling of the OC Simulator. Please contact me with any further questions or comments.

J. P. Munley
Extension 4252

/bl

cc: C. Desai, System Engineer
P. Cervenka, Plant Engineering Supervisor

3. Bypassed per Procedure 402.4.

4. Startup per Procedure 201, Section 4.6.2., 4.9, 6.6, 6.30-6.31, 6.50, 6.54.3, 6.5.4.7 and 6.54.8.

5. Shutdown

   Per Procedure 203 and 402.3.

Read precaution and limitation for both

F. System Interrelations

LO L

1. 24/28 VDC - power to IRM power supplies and trip relays. Loss = downscale indicator and rod block and scram trips.

2. 125 VDC - control power to detector drives. Loss = no detector motion.

3. Vital AC - power to recorders and detector drivemotor. Loss = no recording and no detector motion.

4. RPS - IRM's provide input to RPS. Loss = no effect on IRM's but reactor scram.

5. RMCs - IRM's provide rod blocks to RMC. Loss of RMC = no impact on IRM's.

Provide an interim summary prior to covering LPRMs covering the following:

- **IRM components**
- **IRM indications**
- **IRM trips**
- **IRM controls**

½ Scram per channel

G. Specification

LO L

1. Technical Specifications

   a. Sections 2.3.A.2, 2.3.G, Table 3.1 (Sect A.9, K.3 & K.6), 3.3.H, 4.1, Table 4.H (Sect. 16 & 17)

2. Standing Order #1, Section B

Read & cover b:

H. Operational Experience

1. IRM SCRAM during off normal power maneuver (OE 1729).

   a. Following fundamental weaknesses were identified:

      - Reactivity Management
      - Questioning Attitude
      - Nuclear Safety Culture
      - Control Board Awareness
      - Procedural Weakness

Cover fundamentals which "broke down"

Ask students for root causes, how can be avoided here.

Content/Skills	Activities/Notes
5. Flow Upscale (120%) Sends rod block signal to RMCS (via RPS) 6. Electrical Interlock – only 1 APRM can be bypassed/quadrant.	
F. Power Supplies	
• PSP-1/2: Dual trip units, aux trip relays, flow monitors • CIP-3: IRM/APRM Recorders	**LO B**
G. Operations	
1. Procedure 201, Sec 6.53 & 6.54. 2. Operated per Procedure 403, Sections: 5.1.3, 5.2, 5.3, 5.4	**LO G,I** **Review precautions & limitation**
H. Specifications	**LO K**
1. Technical specifications Sections: 2.1.A/B, 2.3.A.1, 2.3.A.3, 2.3.B, 3.1.B, 3.1.C.1, 3.10C, Table 3.1.1 (Sect A.8 & A.B.13, K.4 & k.5), Table 4.1.1 (Sect 11 & 12) 2. Standing order #1, Section 12 3. Core Operating Limit Report • MCPR Restriction (figure 5)	**Prior to covering Tips provide an interim summary covering the following:** • **APRM function** • **APRM components** • **APRM trips** • **APRM indications** • **APRM controls**
I. Operational Experience	
1. NER OC-02-020: LPRM Bypass switch found out of position. a. Following fundamental weaknesses were identified • Procedure adherence • Pre job briefs • Questioning attitude • Reactivity Management	**Discuss with students how using fundamentals would have prevented this event.**

Content/Skills	Activities/Notes
2. LPRM DNSCL ALARM: Setpoint 2% Amber light on 4F for alarming LPRM illuminates.	
Rod Block when an LPRM feeding an APRM is downscale and mode switch in RUN.	**Review RAP G-7-f**
- Or INOP (HV lost, module removed, or Flux amp switch not in operate)	
F. Power Supplies	**LO B**
1. Vital AC: PSP – ½ (120 VAC to flux amp and aux trip relays.	
G. Operation	**LO I**
1. Procedure 403	**Review precautions & limitations**
H. Specifications	
1. Technical specification	**LO K**
a. Section 3.1.B, 3.1.C, 3.10.C, Table 4.1.1, (Sect. 32)	
2. Standing Order #1, Section #28.	**Discuss CAP O2002-1937 LPRM spiking**
I. Industry Events	
1. OE 8742: Spurious LPRM spike results in a full Rx scram.	**Explain what is causing LPRM spiking (whiskers) refer to problem resolution response in CAP O2002-1937**
a. Following fundamental weaknesses were identified.	**Prior to covering APRMs provide an interim summary covering the following:** • **LPRM function** • **LPRM components** • **LPRM indications** • **LPRM controls**
• Reactivity Management • Inadequate implementation of GE SIL 500 • Questioning Attitude • Troubleshooting	**Review with students which fundamentals would have prevented this event.**

b. No gamma compensation. Gamma flux is proportional to reactor power.

c. Provide overlap with IRM System via the APRM's.

d. Remain in core sensitivitity is reduced over time. Detectors are periodically calibrated using the TIP system.

3. Flux Amplifiers

Amplifies detector current output to drive meters, recorders and trip units. 0-10 VDC out correlated to 0-125 watts/cm^2 surface heat flux. Amplifier gain is adjustable.

4. Trip Units

a. 2 Types: Upscale and downscale. Both have reference and signal inputs. Each produces seal-in and auto-reset output.

b. Seal-in: Local indicator lights on LRPM or LPRM-APRM auxiliaries drawers and must be manually reset.

c. Auto-Reset: Amber indicator lights and alarms on 4F.

5. Power Supply and Monitors

LO B

Supply individual LPRM amplifiers with + 100 VDC and ± 15 VDC.

± 15V are referenced to + 100V circuit instead of GND

Meter provides full scale indication for + 15V and -15V check. When at 100V position, meter = actual VDC.

6. LPRM Auxiliaries Drawer

Location = 3R/5R; upscale, downscale and bypass indicator lights for LPRM's not assigned to APRM channels.

4 Drawers total

7. LPRM-APRM Auxiliaries Drawer

4 Drawers total

Same as LPRM auxiliaries drawer, but for LPRMs assigned to APRM channel

C. Instrumentation

LO H

1. 4F - Individual meters on full core display. Location corresponds to core location

0-125 watts/cm^2

From: Gilbert Johnson
To: jlcuster@amergenenergy.com
Date: 5/7/04 9:30AM
Subject: Re: Requested information

Can you confirm that the inverter for CIP-3 is normally powered by ESF power (i.e, from a bus powered by one of the diesel generators). Also, following a loss of offsite power and restoration of the ESF buses from the diesel generator will the rotary inverter automatically "swap" back from DC to AC.

>>> <jlcuster@amergenenergy.com> 05/06/04 07:36PM >>>
Gil,

Attached please find the updated information you requested. I have gone through and formatted these responses in your requested format, to ensure a clear understanding of the chronology and the comments are contained within the responses.

I am including some additional technical information with this response, as requested. It's been a long day, and I won't be surprised if I forgot to include something you may need, but I'll take care of that in the morning when I can take a fresh look at this.

If you have any questions, please let me know.

Jeff

(See attached file: NRC exam question addenda.doc)(See attached file: c8h rap.DOC)(See attached file: 6254002 tvt surveillances.DOC)

From: <jlcuster@amergenenergy.com>
To: "Gilbert Johnson" <GXJ@nrc.gov>
Date: 5/11/04 8:40AM
Subject: Re: Responses to questions

Gil,

What you have outlined is exactly correct. I will find out what "auxiliaries" are being referred to.

As for Transf. 1/VMCC1A2, there is a maintenance transformer that can power either RPS bus 1 or bus 2. The transformer is normally aligned to VMCC1A2, but through some keylock switches, can be aligned to VMCC1B2. The transformer is used whenever one of the RPS MG sets is not available, but there is a 96 hour administrative condition for operation which limits the time an RPS bus can be powered from the transformer.

Jeff

"Gilbert Johnson" <GXJ@nrc.gov> on 05/11/2004 05:12:36 AM

To: <jlcuster@amergenenergy.com>
cc: "John Caruso" <JGC@nrc.gov>

Subject: Re: Responses to questions

Regarding IRM/APRM indications during a loss of offsite power please confirm the following that I derived from your E-Mails as well as Procedure 403 (and other sources available to me):

IRMs are totally functional with only DC. This is due to the fact that the detectors and amplifiers are directly powered from DC and the indicators on 4F are powered by CIP-3 which (temporarily) is powered from a rotary inverter from a DC motor. In addition the back panel "drawers" have an indicator that will remain functional with (only) DC power.

APRMs receive their input from LPRMs which receive 120 VAC from RPS. That is, without 120 VAC (from RPS) there will be NO LPRM signals available to the APRM drawers.
The APRM "drawers" are powered from 24 V DC, Panel "B" BRK 2. These drawers (on 3R and 5R) have local indicators that are also powered from the same 24 V DC source. Without 24 V DC there will be no signal from the APRM drawers to 4F indication (IRM/APRM recorders) and no "local" indication at 3R/5R.
CIP-3 Breaker 9 supplies power to "recorders and auxiliaries". I understand these are the recorders on 4F but I am not sure what the "auxiliaries" consist of. Again these recorders will remain functional due to DC powered rotary inverter. This rotary inverter is "repowered" from AC power following a 120 second delay.

There is also a "Transformer PS-1 /VMCC 1A2" required though I am not sure how this impacts APRM indication.

Considering all the above, in order to have IRM/APRM indication (that is, accurate indication of reactor power from IRMs and APRMs) following loss of offsite power we need all the following:
24 VDC
125 VDC (for rotary inverter)
120 V AC from RPS bus

>>> <jlcuster@amergenenergy.com> 05/10/04 05:40PM >>>
Gil,

Attached please find responses to the majority of questions you had today and late last week. Along with the question addenda document, I have also enclosed a print out showing 4160V A/B switchgear room and C battery room temperatures that go from December 2003 through March 1, 2004. This document shows the data in three separate columns. Column 1 is the date and time, column 2 is the A/B switchgear room temp, and column 3 is the C battery room temp. I am also attaching a copy of ABN-2 and Procedure 202.1 which supports SRO-12 responses.

I will be completing the remainder of the responses tomorrow morning.

Jeff

(See attached file: vault temperatures.doc)(See attached file: Procedure 202.1.pdf)(See attached file: abn-2.pdf)(See attached file: NRC exam question addenda.doc)

PROCEDURE USE AND ADHERENCE

1. PURPOSE

1.1. Provide direction on how procedures are to be used and the expectations for adherence to all procedures approved at the location in which company or contractor personnel will conduct the activity. **(CM-1)**

1.1.1. This procedure does **not** apply to Work Packages, Work Instructions, Out of Service (OOS) Instructions, or Clearance and Tagging instructions.

2. TERMS AND DEFINITIONS

2.1. **Level of Use Category:** The designation of minimum required reference to the procedure during performance of the task relative to the probability of making an error and the impact of an error. Level of use designation does not relieve the user from performing the procedure exactly as written. There are 3 levels:

NOTE: All procedures that direct manipulation or maintenance of plant equipment shall be treated as 'Level 1 - Continuous Use' unless otherwise designated on the procedure.

2.1.1. **Level 1 - Continuous Use:** Reading each step of the procedure prior to performing that step, performing each step in the sequence specified, and where required, signing off each step as complete before proceeding to the next step.

2.1.2. **Level 2 - Reference Use:** Referring to a procedure periodically during the performance of an activity to confirm that all procedure segments of an activity have been performed, performing each step in the sequence specified and, where required, signing appropriate blocks to certify that all segments are completed. The procedure should be at the work location.

2.1.3. **Level 3 - Information Use:** An activity may be performed from memory, but the procedure is available, not necessarily at the work location, for use as needed to insure the task is being performed correctly and for training.

2.2. **Procedure:** A controlled document that specifies or describes what activity is to be performed. It may include methods to be employed, equipment or materials to be used, accept/reject criteria, and sequence of operations.

2.3. **Procedure Change Request:** Any request for a change to a given procedure such as an Action Tracking Item, Engineering Request, Procedure Performance Improvement System (PPIS) or e-mail as allowed by the Corporate Functional Area Manager.

2.4. **Procedure Segment:** A step or group of steps within a procedure that describes the action(s) necessary to complete a function that constitutes only a portion of the overall procedure.

3. **RESPONSIBILITIES** - None

4. **MAIN BODY**

4.1. Procedure User

4.1.1. **FOLLOW** the procedure exactly as written.

4.1.2. **USE** only the current revision of the procedure consistent with the following:

- Issued for use in Passport/PIMS/EDMS or an authorized critical procedure set (i.e. Main Control Room procedure set) at the time the task starts.
  - Superseded revisions may still be used for applicable work tasks provided no fatal flaw exists and it will be removed from further use upon task completion.
- A procedure may be used upon authorization or upon authorization on the implementation date if specified.
- Electronic attachments and/or forms may be used provided that the attachment and/or form complies with all procedure requirements.

4.1.3. **DETERMINE** if procedure is appropriate to accomplish task.

4.1.4. **REVIEW** the entire procedure, or applicable portions of the procedure, prior to use to ensure that the task can be accomplished in the current plant/component condition.

4.1.5. **If** an evolution is suspended for an extended period of time, **then RE-VERIFY** conditions are suitable prior to resuming (i.e. initial conditions, prerequisites).

4.1.6. **OBSERVE** all Precautions, Limitations, and applicable Prerequisites.

4.1.7. **STOP** whenever any of the following is determined:

- Procedure cannot be performed as written, or
- Continuation would result in an unsafe condition, or
- Continuation would result in personnel injury, or
- Continuation would result in a radioactive release, or
- Continuation would result in an unexpected condition, or
- Continuation would result in a violation of a Technical Specification, or
- Continuation would result in a violation of a License Condition.

1. **NOTIFY** Job Supervisor to determine if the procedure can be continued as written.

2. **If** procedure cannot be continued, **then DISCUSS** with Job Supervisor and Operations to determine the proper method to place the system/component in a stable and safe condition.

   A. **TAKE** necessary actions, **and EXIT** the procedure as determined by the Job Supervisor and Operations.

4.2. Job Supervisor

4.2.1. **EVALUATE** any situation as a result of step 4.1.7.

1. **If** the procedure cannot be performed as written, **then INITIATE** a Procedure Change Request (PCR) or other appropriate action **and REVISE** or have revised the procedure prior to continuing or attempting again.

4.3. Step Performance

4.3.1. **Whenever** a conflict arises between a standard procedure and a site-specific procedure, **then** the standard procedure shall prevail except when site-specific procedure directs actions that ensure compliance with regulatory requirements.

4.3.2. **PERFORM** all numbered steps for Level 1 – Continuous Use and Level 2 – Reference Use level of use procedures in sequence unless otherwise specified within the procedure or work order.

4.3.3. **PERFORM** steps with bullets or dashes in the best sequence based on conditions, consistent with the applicable writers' guide convention.

NOTE: Incorrect Equipment Identification numbers are not considered reference errors.

4.3.4. **When** a procedure is found to have inconsistencies that are simply punctuation, style, insignificant word or title errors, reference errors or other errors that do not affect the outcome, result, function, processes, responsibilities, or performance requirements, **then** personnel using the procedure should:

1. **NOTE** the deficiency.

2. **CONTINUE** the activity in progress.

3. **INITIATE** a appropriate corrective action after activity completion.

4.4. Referenced Items

NOTE: Outdated references do not require an immediate procedure change to complete the task provided consistency is maintained with step 4.3.4.

4.4.1. **If** a procedure referenced within another procedure has been upgraded, revised, or otherwise had its number changed, **then USE** the appropriate procedure as referenced in EWCS/Passport/PIMS or controlled electronic procedure index.

1. **INITIATE** appropriate corrective action upon task completion.

4.4.2. **If** no "Superceded by" document is indicated, **then STOP, PLACE** the system/component in a safe and stable condition **and NOTIFY** the job supervisor for resolution.

4.5. Performance Documentation and Placekeeping

4.5.1. **If** the field copy of a procedure has become contaminated, deteriorated, or parts have been recorded on different copies, **then TRANSCRIBE** data to a single, clean copy of the procedure.

4.5.2. **USE** Not Applicable, "N/A" to document completion of a procedure step **when:**

- The condition(s) stated in a conditional step is not met, or
- The procedure specifically states when N/A can be used, or
- The procedure is designed for partial performance.

4.5.3. **INDICATE** Condition Met, "C/M" as necessary for conditions met by prior actions taken out of context of the current activity,(e.g. a valve is already closed, a switch is already positioned, etc).

4.5.4. **If** a procedure step directs placing a component in a specific condition, **and** the component is already in that condition, **then** before continuing **DETERMINE** if the procedure is still the correct procedure for use with the existing plant configuration.

NOTE: Placekeeping applies to procedures that are Level 1 - Continuous Use, except alarm procedures and administrative procedures. Placekeeping is a process designed to help the procedure user track completion of each procedure step to ensure that all necessary steps are performed.

NOTE: During transients, placekeeping is not required in order to take actions to place the plant in a stable condition. When the unit is stable, review the procedures used to verify compliance.

4.5.5. **INDICATE** step completion using placekeeping methods such as checkmarks, initials, or recording data as stated by the procedure step.

1. **If** a procedure is being used repetitively to perform simple tasks, **then** place keeping may be suspended after the first use of the procedure with approval of the supervisor.

   A. The procedure must still be present at the job and available for reference.

   B. Approval shall be obtained from the job supervisor before place keeping is suspended.

4.6. User Capability

4.6.1. Actions may be performed by trained, qualified individuals as User Capability without a procedure provided that:

- No procedure exists for the action and
- The task is simple, short, and routine where the consequences of improper performance are not significant.

1. Examples of tasks considered within the capability of a qualified individual:
   - Minor adjustments of temperature, flows, or pressures of systems already placed in service.
   - Changing charts, drive speed gears, or slide wires on recorders.
   - Replacing lamps or fuses.
   - Adjusting packing on certain manual valves.
   - Setup of welding equipment.
   - Checking circuit voltages
   - Minor Maintenance activities as outlined in MA-AA-716-003, Tool Pouch/ Minor Maintenance or equivalent site procedure.

4.7. Partial Performance

4.7.1. **If** a portion of a procedure is used in lieu of performing the procedure in its entirety **then** the job supervisor of the individual performing the procedure or work planner will:

SQR Stations

4.7.1.	**If** a portion of a procedure is used in lieu of performing the procedure in its entirety and the procedure is written to allow this, **then** the appropriate person having the authority stated in the procedure can authorize partial use. **If** no partial procedure use authority is stated, **then** the Station Qualified Reviewer (SQR) will:

1. **DETERMINE** the steps that are adequate and appropriate to accomplish the desired task.
2. **ENSURE** all applicable Prerequisites, Precautions, and Limitations and Actions are met before performing.
3. **ENSURE** the component/system is returned to a condition ready to perform the next evolution or returned to condition normal/expected for plant conditions at that time.
4. **ENSURE** that skipping steps will not result in missed acceptance criteria or an incomplete surveillance.
5. **INDICATE** that the procedure is partially performed and why.
   A. **ANNOTATE** steps that are not applicable before performing a partial procedure with "N/A".
      1. Steps that may be required during the course of the work may be annotated when the job has been completed.

4.8. Remote Performance

4.8.1. **When** a secondary individual(s) is required to perform a portion of a procedure, **then** they shall have at a minimum:

- A copy of the applicable steps to permit placekeeping for their portion of the procedure, and
- Any pertinent Precautions or Limitations and Actions.

4.8.2. **If** a procedure requires remote actions by a secondary individual(s), **then** the in-hand and place keeping requirements may be satisfied by the primary individual through formal communication of the required actions to the secondary individual(s).

1. The primary individual is responsible for the overall procedure execution and shall:
   - **COMMUNICATE** with the secondary individual(s) to sequence the applicable steps.
   - **RECEIVE** confirmation that the applicable steps are complete before continuing in the procedure.

NOTE: The secondary individual(s) need not have a copy of the whole procedure in hand. The burden for proper sequencing and reading of the procedure rests with the primary individual.

2. **If** a step sign-off is made by an individual who did not actually perform the action, **then INDICATE** both individuals.

   A. **INDICATE** the individual that performed the action followed by a slash (/) and then the individual signing-off the step.

4.9. Transient Conditions

It is recognized that it is possible that circumstances will arise that are not forseen in the procedures. If such a circumstance arises, and presents imminent personal injury, equipment damage, injury to the public or similar consequence, then actions outside of procedures may be taken, provided those actions are approved by the Shift Manager. The exception to the requirement for Shift Manager approval is action to prevent personal injury or to save a life.

4.9.1. Actions required to manually duplicate an automatic action that has failed to automatically occur may be performed from memory.

4.9.2. Immediate Operator Actions listed in abnormal or emergency procedures may be performed from memory.

Braidwood/Byron

During transients, actions required to place the plant in a stable condition may be performed from memory.

4.9.3. The licensee may take reasonable action that departs from a license condition or a Technical Specification in an emergency when:

1. The action is immediately needed to protect the public health and safety, and

2. No action consistent with license conditions and Technical Specifications that can provide adequate or equivalent protection is immediately apparent, and

3. A licensed Senior Reactor Operator has approved the licensee action prior to taking the action.

4.9.4. Following an action that departs from a license condition or a Technical Specification, **INITIATE** NRC notification.

4.10. Work in Progress

4.10.1. **If** an activity has been started under a previously approved procedure that has since been superseded or revised, **then:**

1. **CONTINUE** if the activity is not impacted by the change (i.e. an editorial revision), otherwise

2. **CONTACT** the job supervisor for further direction.

4.11. Improved Technical Specification (ITS) Upgrade

NOTE: Procedure steps or other information that are designated as "ITS" are prohibited from use until the station has officially turned-on the ITS revision to Technical Specifications.

4.11.1. Prior to ITS implementation, **USE** Current Technical Specification (CTS) item(s) where both CTS and ITS items are present.

4.11.2. Following ITS implementation, **USE** information annotated as Improved Technical Specification (ITS) item(s) where both CTS and ITS items are present.

5. **DOCUMENTATION** - None

6. **REFERENCES**

6.1. Writers Reference

6.1.1. INPO Good Practice OA-106, Technical Procedure Use and Adherence.

6.2. Commitments

CM-1 INPO SOER 92-01, Reducing the Occurrence of Plant Events Through Improved Human Performance. (Entire Procedure)

7. **ATTACHMENTS** – None

Exelon Nuclear

Course/Program:	NUCLEAR PLANT OPERATOR INITIAL	Module/LP ID:	2611-PGD-2621
Title:	©NUCLEAR INSTRUMENTATION	Course Code:	828.0.0029
Author:	J. Costic	Revision/Date:	03-01/20/03
Prerequisites:	None	Revision By:	J. Costic
		Est. Teach Time:	~ 10 hours

Qualified Nuclear Engineer Review (If applicable):		Date:	
Training Supervision Review:		Date:	
Line Management Approval:		Date:	

OBJECTIVES

From memory unless otherwise indicated, and in accordance with the lesson plan, the trainee shall be able to:

	Objective #	Objective Description	Pg. #
A.	(01)10435	Given plant operating conditions, describe or explain the **purpose(s)/function(s)** of the system and its components..	2,3,10,16, 20,26,28
B.	(01)10436	Using plant procedures and electrical drawings, determine **electrical power supply** for system equipment and any associated/applicable logic,including power loss effects.	5,12,17, 19,25,27
C.	(01)10438	Using the system P&Ids, locate each of the system **components** and explain its **operation and limitations** with the system.	3,10,16, 20,26,28
D.	(01)10441	Given the system logic/electrical drawings, describe the system **trip signals** & setpoints and expected system response including power loss or failed components.	6,7,14,18, 24
E.	(01)10442	Given the system logic/electrical drawings, describe the system **bypass or reset logic** and return the system to normal or standby condition.	5,13,22
F	(01)10444	Describe the **interlock signals** and setpoints for the affected system components and expected system response including power loss or failed components	5,7,14,24, 32

© Copyright 2003 by Exelon Nuclear, All Rights Reserved. Permission for reproduction and use is reserved for Exelon Nuclear. (Any other use or reproduction is expressly prohibited without the express permission of Exelon Nuclear.)

Objective #		Objective Description	Pg. #
G	(01)10445	Given a set of system indications or data, *evaluate and interpret* them to **determine limits**, trends and system status	8,14,25
H	(01)10446	Identify and explain **system operating controls/indications** under all plant operating conditions.	5,6,7,11, 12,14,17, 18,21,22, 23,29
I	(01)10447	Given **normal operating procedures** and documents for the system, describe or interpret the procedural steps. [*Describe and interpret* procedure sections or steps and documents, under **normal operating conditions**, that involve this system.] [200s, 300s, 400s, 800s]	8,14,25, 33
J	(01)10449	State the function and interpretation of **system alarms**, alone and in combination, as applicable in accordance with the system RAPS. [500s, RAPS]	7,14,18, 24,33
K	(01)10451	Given **Technical Specifications**, identify and explain associated actions for each section of the Technical Specifications relating to this system including personnel allocation and equipment operation.	8,19,25, 34
L	(01)10453	From memory explain or describe how this system is interrelated with other plant systems.	8,15,33

References:

A. Procedures:

1. Operations Procedures:
   a. 201, Plant Startup
   b. 202.1, Power Operation
   c. 203, Plant Shutdown
   d. 312.11, Nitrogen System and Containment Atmosphere Control
   e. OP-AA-101-111-1002 Operations Standards and Fundamentals

2. Instrument Procedures:
   a. 401.1, Energizing SRM Channels for Operation
   b. 401.2, Nuclear Instrumentation SRM Channels Operation During Startup
   c. 401.3, Operation of Nuclear Instrumentation SRM Channel During and After Shutdown
   d. 401.4, Nuclear Instrumentation Channels SRM Bypass Operation
   e. 402.1, Energizing the IRM System for Operation
   f. 402.2, IRM Operation During Startup
   g. 402.3, IRM Operation During Plant Shutdown
   h. 402.4, IRM Bypass Operation
   i. 403, LPRM-APRM System Operation
   j. 405.1, Placing the TIP System in Stand-By Readiness
   k. 405.2, Operation of the TIP System

3. Surveillance Procedures:
   a. 620.3.006, Source Range Monitor Bench Calibration
   b. 620.4.004, Source Range Monitor Test and Calibration (Front Panel Test)
   c. 620.3.007, Mean Square Voltage - Wide Range Monitor (IRM) Bench Calibration
   d. 620.4.005, Intermediate Range Monitor Test and Calibration (Front Panel Test)
   e. 620.3.001, LPRM Test and Calibration (Front Panel Test)
   f. 620.3.013 & 620.3.023, APRM Surveillance Test and Calibration (Systems 1 & 2)
   g. 620.4.002, APRM Surveillance Test - Front Panel Check
   h. 620.3.009, LPRM Calibration

4. Alarm Response Procedure 2000-RAP-3024.01, NSSS, Window G, Neutron Monitors

5. System Diagnostic & Restoration Procedure 2000-OPS-3024.20, Nuclear Instrumentation-Diagnostic and Restoration Actions

6. Core Engineering Procedures:
   a. 1001.2, Estimated Critical Position
   b. 1001.9, IRM Calibration to Reactor Power
   c. 1001.39, LPRM Calibration Using Power Plex

7. Standing Orders:
   a. #1, Instrumentation Setpoints

B. Drawings:

1. GE706E812, Neutron Monitoring System
2. GE237E566, Reactor Protection System
3. GE237E643, Source Range Monitor
4. GE237E645, Average Power Range Monitor
5. GE237E912, Reactor Manual Control System
6. GE237E697, Traversing In-Core Probe and Calibration System
7. SN 13432.19-1, Nitrogen Purge and Makeup System

C. Vendor Manuals:

1. GEK-732, Neutron Monitor System
2. GEK-998, Power Range Monitor
3. GEK-13911, Average Power Range Monitor
4. GEK-13921, Flow Converter
5. GEK-13923, APRM Flow Unit
6. TEC-31041-OM-01, Signal Isolation System
7. GEK-109842, Flow Control Trip Reference (FCTR) Card
8. Option II Flow Control Trip Reference Card User's Manual

D. Other:

1. Technical Specifications, Sections 2.1,2.3, 3.1, 3.2,3.3.H, 3.9, 3.10, 4.1 & 4.9
2. OCNGS Updated FSAR, Section 7.5.1.8
3. Current Core Operating Limit Response
4. OE 1729, IRM Scram During Off Normal Power Maneuver
5. SER 6-00 Cultural Contributors To A Premature Criticality
6. ECR OC 01-01193, Increased Core Flow Implementation
7. OE 12504: APRM Flow Biased Scram Setpoints Non-Conservative
8. OE 6656 LPRM Detectors Incorrectly Wired To APRMS
9. CAP O2002-1405 APRM #4 FCTR Card Inop
10. CAP O2002-1937 LPRM Spiking
11. OE 8742 LPRM Spike Results in Full Rx Sc
12. NER OC-02-020 LPRM Bypass Switch Found Out of Position
13. ECR OC 01-01156 Replace EPROMS on new cards to implement mini-mella

Lesson Description

Approximately 8 hours of classroom lecture/discussion
Additional Instructional Methods two (2) hours.

Training Materials

1. Lesson Plan
2. Student Handout
3. Media
   - Powerpoint Presentation
   - Transparencies/Overhead projector
4. P&IDs
5. Procedures

Change Summary:

Rev. 0: This is a new lesson plan written IAW the latest revision to the Lesson Plan Instruction. It combines the following lesson plans into a single, concise lesson plan:

- 2621.828.0.0029A, Traversing In-Core Probe System
- 2621.828.0.0029B, Source Range Monitoring
- 2621.828.0.0029C, Intermediate Range Monitoring
- 2621.828.0.0029D, Local and Average Power Range Monitoring

The lesson plan indicates the approximate number of hours required to teach each major section so the instructor can gage convenient break points.

This new lesson plan also incorporates the latest OTDAITS for the above mentioned lesson plans and also updates references to the latest revision.

Rev. 1: This revision updates this lesson to current format, adds NRC Maintenance Rule and section to review selected OE.

Rev. 2: Update format, titles and references. Deleted inactive NLO Tasks 21501(04)006, 21501(04)005 and 21501(04)302.

Rev. 3: Updated recirc flow monitoring and flow control trip circuitry, NI recorder updates, operating experience. Inlcuded pen and ink changes (ETTS# 43423 & 43801) and put lesson plan into Exelon format.

Content/Skills	Activities/Notes
I. Introduction	Slides 1 & 2
A. The purpose of the Neutron Monitoring System is to provide the capability to monitor neutron flux in the Reactor Core from shutdown conditions to the neutron flux anticipated in the case of overpower conditions requiring Reactor Scram. Nuclear instrumentation provides automatic protective functions by providing alarms, rod blocks and scram signals. Three basic types of chambers and signal conditioning equipment are used. The neutron flux is monitored over the entire range by the Source Range Monitoring (SRM) System, the Intermediate Range Monitoring (IRM) System, and the Local Power Range Monitoring (LPRM/APRM) System. The fission chambers used in the three nuclear instrumentation systems are essentially the same. However, the various systems operate at different voltages and utilize different gas (argon) pressures. The Traveling in Core Probe (Tip) system is used for calibration of the LPRM detectors and to determine axial neutron flux levels for power distribution. The Operators monitor SRM's while shutdown during startups and during refueling activities. SRM's are used when the Reactor is taken Critical during startups. IRM's are used during startups and will provide scram functions if necessary. APRM's are used during the Run Mode and scram functions are provided. Operators rely on Nuclear Instrumentation indications and functions for safe plant operation and are vital to Reactivity Management.	**Complete administrative tasks.** **Prior to class write the following on the board:** • **Name** • **Phone number** • **Topic/LP #** • **Date** **Create "parking lot" for unresolved issues.** **Introduce yourself and class members as appropriate.** **Complete podium note activities.** **Inform trainees of presentation and evaluation methods:** • **Lecture/Discussion** • **Written test** **Distribute Trainee Handout.**
B. Present the Learning Objectives.	**Show Introductory slides.**
C. Discuss current NRC Maintenance Rule Status 1. If A1, discuss plans to return it to an A2 status.	**Show Objective slides.** **Review applicable fundamentals at the appropriate points during the presentation.**

II. DETECTOR OPERATION

Slide 3

A. Generates electrical signal proportional to flux.

LO A

B. Fission Chamber - Inner surface coated with 90% enriched U-235.

C. Thermal neutrons fission U-235. Charged fission products ionize the Argon fill gas. Electrons and ions move to respective electrode causing current signal.

D. Gammas also produce Argon ionization but produce pulse of smaller magnitude (~5-7 times).

E. Gamma contribution from fission products is larger than from direct fission in the Source Range and Intermediate Range(<1%). Therefore, gamma flux is not proportional to reactor power and must be compensated. Gamma production during power operation is mainly from direct fission (~7% from fission products) and is therefore proportional to reactor power and needs no compensation during power operations (>1%).

Compensating techniques will be discussed in the respective NI sections.

III. SOURCE RANGE MONITORS

Slides 4 - 42

This part requires ~3 hours of classroom time.

A. System Functions

1. Monitor and record flux and period during S/D, refuel, S/U.

LO A

2. Generate alarm and rod blocks.

3. Perform functions until one decade overlap with IRMs.

Until 3 IRMs per RPS channel indicate ≥ 50% on Range 1

B. Component Descriptions

LO A,C

1. In Core Detectors

   a. One moveable detector for each of 4 SRM channels located in dry tube at corners of fuel assembly opposite rods. One detector per quadrant.

   b. Fission chamber is pressurized to 14.5 atm. with argon. High volt on inner electrode = 300 to 350 VDC.

Source range detector theory

2. Detector Drive Unit

   a. Permits vertical movement of detector to prevent burnout and extend dynamic range so period is available at all times.

Reactivity Management must be reinforced while presenting NI's

   b. Rack and pinion arrangement positions detected inside dry tube (completely Manual). Initiated by switches on 4F.

   c. 36"/min. rate of travel. Mechanical stops 24" above core midplane and 24" below active fuel. Electrical stops 6" before upper stops and lower Mechanical stops.

Full in position = peak flux points during S/D & S/U to crit.

   d. Drive Mechanism

      1) Detector and cable inside shuttle tube. Shuttle tube moves inside dry tube. Shuttle tube connected to drive tube. Rack cut into side of drive tube. Pinion in gear box. Flexible shaft through Rx. support pedestal to motor module drives gear box.

Dry tube forms pressure boundary

   e. Motor Module

      1) 3-phase <1 Hp motor; reduction gear, electrical limit switch Location is outside Rx. support pedestal in the drywell.

      2) Power Supply: IP-4.

Content/Skills	Activities/Notes
f. Relays Location: ER-4 outside drywell tip shield area Rx. bldg. 38'. Reverse phase to motor to change direction.	
3. Pulse Preamplifier	
a. Amplifies detector output, isolates detector high voltage from circuitry, isolate detector output from the high voltage power supply. b. Location: outside drywell near scram disch. vol.	**Pre amp location is as close as possible to detectors due to pulses from the detectors being very small**
4. Pulse Height Discriminator Effectively eliminates gamma pulses and produces square wave out. Uses a discriminator voltage. Square wave generator produces a uniform square pulse for every input pulse. Digital switching circuit produces either 0 or 10 VDC.	
5. Log Integrator Produces DC current proportional to the log of input pulse rate. Allows use of log scale. Diode pump circuits allow the pulses to charge capacitors. The capacitors discharge to provide output to the LCR Amp.	**10^1 to 10^6 cps**
6. Log Count Rate Amplifier Amplifies Log Integrator Output to drive local and remote meters, 4F recorders, period and trip circuitry.	**0 to 10 VDC** **3R/5R & 4F meters**
7. Differentiator (Period Amplifier) Differentiator measures the rate of change of the LCR amplifier signal and provides an output to period meters and alarms.	
8. Meters and Recorder Local and log count rate and period meters for each channel. Also one 4-channel digital recorder monitors and displays SRM counts and trends.	**Records display data on PCMCIA card which can be downloaded & saved to CD-ROM**
9. Trip Circuits 2 types = upscale and downscale. Both have reference and signal inputs. Each produces seal-in and auto-reset output. Seal in = local indicating lights. Auto-reset = lights on 4F,	

alarms on annunciator "G" Provides input to RMCS for rod withdrawal blocks.

10. Calibration Circuits

Generate test signals. Two circuits; 1) signal generator = pulse rates = 10 and 10^5 cps. Inputs to the P.H.D. 2) Ramp generator = fixed ramp of 10 sec. period or variable for calibration of period circuitry and setting short period alarm.

11. Power Supplies

Input = ±24VDC from batteries. Pre-regulation output = regulated 20 VDC. Voltage regulation out = ±15VDC regulated. HVPS out = 100 to 600 VDC, adjustable (detector bias voltage).

LO B

C. Controls and Interlocks

LO E,F,H

1. SRM Detector Movement Control

Discuss Rad Protection fundamentals for S/D conditions when the drywell is open and Operations is moving SRMs for maintenance. Rad conditions under the Rx vessel will change.

a. Master Drive Select Switch Loc. = 4F. Enables IRM or SRM drive control switches. Positions: SRM/OFF/IRM 1-4/IRM 5-8.

b. SRM Drive Select Switch.

Selecting individual SRM detectors can be used to determine which aren't full in/out.

Loc. = 4F. Position: 1/2/3/4/all. Selection for in or out for one or all detectors. White " SELECT IN" or amber "SELECT OUT" lights above switch show individual detector position. Amber "ALL OUT" or white "ALL IN" when all 4 detectors are full out or full in.

c. IRM/SRM Drive Control Switch. Loc. = 4F. Drives selected detectors in or out. Positions: OUT/OFF/IN. Amber "DRIVE OUT" & green "DRIVE IN" lights.

2. SRM Bypass Switch

Loc. = 4F. Defeats alarms and trips for single channel. Joystick positions: CH 21/through CH 24/unlabelled mid position. When taken to bypass the following occur:

Used to bypass malfunctioning channel and during calibration.

- Period light on 4F extinguishes
- "Hi-Hi", "Dnscl. or Inop" and "Retr. Permit" on 4F light.
- Inputs from channel to 3F alarms bypassed.
- CPS and period meters on 4F still work.
- Bypass indicating light on 3R or 5R lights.
- All 3R and 5R meters and lights still work.

Content/Skills	Activities/Notes
3. 3R and 5R Controls	**LO H**
a. Mode Switch - six positions	
• Operate: (normal)	
• Standby = Inop. trip inserted to alert operator not in normal position.	
• Zero = Disconnects input to LCR amp to zero adj. amp and meter.	
• Period = Ramp generator for period cal.	
• 10^5 = 10^5 cps to PHD (CRT check)	
• 10 = 10 cps to PHD (CRT check)	
b. Ramp Switch - In conjunction with period position mode switch.	
• Fixed = 10 sec. period	
• Neutral = infinite period	
• Variable = Internal drawer adjustment - infinite to 10 sec.	**Q. Do the SRMs provide any automatic scram signals?** **A. No scram signals are generated from the SRMs only Rod Blocks.**
c. Reset Switch - Resets seal-ins and ramp generator	
• Ramp = Resets ramp generator after upper limit	
• Neutral = Spring return position	
• Trip = Resets seal-in trips	
4. SRM "Trips"	
a. All SRM Trips - any single channel to initiate.	**"Single-Coincidence"** **LO D**
b. All SRM Rod Blocks bypassed in "Run", <u>or</u> individual SRM Rod Blocks bypassed when channel is bypassed or S/U or Refuel if IRMs ≥ Range 8.	
c. Detector Position Rod Block: Auto-bypassed when > 500 cps.	**Detec. Not fully inserted & ≤ 500 cps**
d. Upscale Rod Block.	
e. Downscale and Short Period = Alarms but not Rod Blocks.	

Content/Skills	Activities/Notes
5. Indictions	**LO H**
a. 4F	
• Each SRM has red "Hi-Hi", amber "Hi", and white "Dnscl. or Inop" lights on 4F apron.	
• Amber "Period" light below each period meter.	
• White "Retr. Permit" light below each cps meter.	**Count Rate > 500 cps**
• Rod block indication for "SRM Detec. Posn.", " SRM high count", and "SRM Inop".	
b. 3R/5R	
• Seal-ins = "Upscale Hi-Hi" (Red) "Upscale high" (amber) "Period" (amber) "Inop" (white) "Downscale" (white) "Retr Permit" (white)	
• Non Seal-in = "Bypass" (white)	**On SRM-IRM Aux. Drawer**
D. Electrical Interlocks, Auto Trips, Alarms	**LOs D,F,J**
1. SRM Hi-Hi (Alarm) $5x10^5$ cps (Standing Order #1) Count rate at extreme high end.	**No longer a scram inut (GE237E566, Sh2)** **RAP G-3-d**
2. SRM High or Inop (Rod Block/Alarm) High: $\leq 5x10^5$ cps = Tech Spec, $1x10^5$ cps = Setpoint Mode switch not in "operate" Module unplugged, or loss of detector high volts	**RAP G-4-d** **Alerts operator reaching high end or channel not reliable.**
3. SRM Detector not Fully Inserted (Rod Block/Alarm) Tech Spec = Detector not full in and cps $\geq$ 100. S.O. #1 = Detector not full in and cps $\leq$ 500.	**RAP G-7-a**

Content/Skills	Activities/Notes
4. SRM Downscale	**RAP G-5-d**
0.5 cps	
Alerts operator below reliable level.	
5. SRM Period Short (Alarm)	**RAP G-7-d**
<30 sec. - Bypassed in Run.	
E. Operation	**LOs G,I**
1. Startup	**Read precautions & limitation & review plant S/U until SRMs are withdrawn. Reinforce procedural compliance.**
a. Energized per Procedure 401.1	
b. Readied per Procedure 401.2	
c. Operated per Procedure 401.3	**Q. How many SRMs are required to be operable prior to performing a plant S/U?**
d. Bypassed per Procedure 401.4	**A, Two**
e. Utilized on Plant Shartup per Procedure 201 Section 4.1,4.2, 6.10-6.12, 6.19, 6.20, 6.22, 6.23, 6.28, 6.30.2, 6.35	
2. Shutdown	**Read applicable steps until SRMS are fully inserted**
a. Per Procedure 203	
F. Specifications	**LO K**
1. Tech Specs	
a. Section 3.1.A, Table 3.1.1, (Sect K)	
b. Section 3.2.B.5	
c. Section 3.9.D, E.2, F.2	
d. Section 4.1, Table 4.1.1, (Sect 21)	
e. Section 4.9.B, C.2, D.2	
2. Standing Order #1, Section #14	
G. System Interrelations	**LO L**
1. 24/28 VDC - To pwr. supplies and aux. trip relays. Loss = SRM Downscale Ind. and Rod Block	

Content/Skills	Activities/Notes
2. 125 VDC - Control pwr. to drives. Loss = No detec. movement	
3. Vital AC – (CIP-3) Pwr. to recorders (JP-4) drive/motors. Loss = No recorders and no detector movement	
H. Operational Experience	
1. SER 6-00: Cultural contribution to a premature criticality.	**Discuss: Fundamentals which broke down.**
a. Following fundamental weknesses were identified:	
• Self checking	
• Peer Checking	
• Questioning Attitude	
• Nuclear Safety Culture	
• Use of OE	
• Reactivity Management	
• Self Assessment	**Prior to covering IRMs provide an interim summary covering the following:** • **SRM components** • **SRM controls** • **SRM interlocks** • **SRM rod blocks**

Content/Skills	Activities/Notes
IV. INTERMEDIATE RANGE MONITORS	**Slides 43 - 80**
A. System Functions	**LO A**
1. Monitor and record flux between Source Range and Power Range monitoring systems.	**Redundancy – single failure neither cause nor prevent scram.**
2. Scram if IRM levels unacceptably high or inoperative.	
3. Rod withdraw block if IRM levels high or low or system degraded.	
4. Perform from one decade overlap with SRM to one decade overlap with APRM.	**Power Range = $3X10^{-4}$ – 40%**
B. Component Descriptions	
1. In Core Detectors	**LOs A,C**
a. One detector for each of eight IRM channels. Located in dry tube at corners of fuel assembly opposite rods. Two detectors per quadrant.	**Functions same as SRM detector**
b. Pressurized to 1.2 atmos. with argon. High volt on inner electrode = 100 to 150.	
c. Gamma compensation in intermediate range = Campbelling. A.C. portion of detector output sent to drawer for processing. Gamma component approximately 1/7th of neutron component. Squaring signal makes resultant gamma component 1/49th, thus insignificant.	**Mean square analog Campbell's theorom**
2. Detector Drive Unit: Same as SRM.	**10' of total travel**
3. Voltage Preamplifier	
a. Contains D.C. blocking capacitor.	
b. Increases gain to overcome line noise.	
c. Passes one of two sets of frequencies depending on range. Two bands exhibit best proportionality to power.	**Ranges 1-6 = 8 & 10 Khz** **Ranges 7-10 = 300 & 600 Khz**
4. Amplifier Attenuator	
a. Determines gain of circuitry. (Based on range switch position.)	

b. Consists of voltage divider and relays.

5. IRM Range Switch

   10 positions = 1-10. Selects range for IRM channel Sends signal to Calibration and Diode Logic Unit.

6. Calibration and Diode Logic Unit

   Provides: Control signals for gain and sensitivity and test signals for calibration. Diode logic - signal from range switch, output to attenuator to adjustable gain and to pre-amp for hi/lo frequency band. Calibration signal gen. - output to attenuator through front panel of drawer mounted variable resistor for 0-125% & 0-40% tests of circuit response to neutron flux.

7. Inverter

   Generates an equal amplitude 180° out of phase signal and sends both the 0 and 180° degree signals to the Mean Square Analog Circuit.

8. Mean Square Analog Circuit

   a. Combines 0 & 180° signals generated in the inverter to produce full wave rectified output. Squares the neutron/gamma ratio for gamma compensation.

   Thus output more proportional to neutron flux.

9. Output Amplifier

   Amplifies signal to 0-10V to drive meters, recorder and trip/units.

10. Output Meter and Recorders

    LO H

    - Individual local meters on drawers on 3R/5R.
    - Four – 4 channel IRM/APRM digital recorders on 4F. Each recorder can select either IRMs or APRM's or both. IRM during S/U, APRM when in RUN.

      IRM during S/U, APRM when in RUN.

    - Can visually display trend (chart) numerical or bar graph.
    - Can select either 0-40, 0-125 or both scales.
    - Range 10 calibrated so units = % power. Must pull up on range switch to position to range 10 (prevent inadvertant MSIV closure if < 850# Reactor Pressure)

      10 ranges at 1 decade per 2 ranges = factor 10^5 between ranges 1 & 10

Content/Skills	Activities/Notes
• Every two ranges = 1 decade so 10 units Range 1 = 1 range.	**IRM during S/U, APRM when in RUN.**
11. Trip Circuits	
a. Generate alarm, in some cases rod block or scram. 2 types: upscale and downscale. Both have reference and signal inputs. Each produces seal in and auto reset output. Seal in = local indicator lights and must be manually reset. Auto-reset = lights on 4F, alarms on 3F, and to RPS and rod block logic.	
12. Power Supplies	
± 24 VDC from station batteries. Regulated to 20 VDC and ± 15 VDC output to circuitry and HVPS for detector. Loc. = Within module drawers	**LO B**
Vital AC: IP-4: Detector drive motor CIP.3: Recorder PSP-1/2: Aux trip relay 125VDC: ER /Relays	
C. Controls	**LO H**
1. IRM Detector Movement Control	
a. Master Drive Select Switch	
Loc. = 4F enables IRM or SRM drive control switches.	
Positions = SRM/OFF/IRM 1-4/IRM 5-8	**IRM 1-4 = 11-14, IRM 5-8 = 15-18**
b. IRM Drive Select Switch	
Loc. = 4F. Positions =1/5, 2/6, 3/7, 4/8, All 8. Selects for motion any single detector (in conjunction with Master Drive Select) or all. White "select in" and amber "select out" lights above switch indicte when detector full in or out. Amber all out and white all in lights indicate when <u>All</u> detectors have reached the full in or full out position.	
c. IRM-SRM Drive Control Switch	
Loc. = 4F. Drives detectors in or out. Positions = IN/OFF/OUT. Amber "drive out" and green "drive in" lights.	**Lights Local above switch**

2. IRM Bypass Switches "Joysticks"

LO E

   a. 2 switches Loc. = 4F. Only one channel can be bypassed per RPS trip system. Division 1 position - CH11/CH12/CH13/ CH14 (mutually exclusive). Division 2 positions = CH15/CH16/CH17/ CH18 (mutually exclusive) : When bypassed all channel protection function also bypassed. For a bypassed channel:

"Joysticks"

Each are "locked" in an unlabeled mid-position (straight-up)

- "Hi-Hi", "High" and "Dn Scl or Inop" Lights on 4F ON.
- White bypass light on SRM-IRM auxiliary drawer lit.

3R/5R

- All indicator lights on 3R/5R and meters on 3R/5R and 4F remain functional.

3. IRM Range Switches

   a. Eight switches - apron section of 4F. Going to range switch 10 when Rx pressure < 850 causes MSIV closure. Reset knobs not functional.

   b. Going to range 10 causes a resultant scram when RX Pressure >600# and < 850 psig.

4. 3R/5R Controls

   a. Reset Switch – spring loaded to center. Resets seal-in lights on drawer.

   b. Mode Select Switch

      6 positions:

      - OPERATE = (normal position)
      - STANDBY = Same as operate except generates inop signal. This will generate a ½ scram if Rx mode switch is in S/D, S/U or Refuel.
      - ZERO 1 = Removes outut signal to "zero" amp & meters.
      - ZERO 2 = Inputs zero to ATTEN to zero Mean Square Analog Circuit.
      - 125 = Calibration signal injected for odd ranges.
      - 40 = Calibration signal injected for even ranges.

Warns operator that channel mode switch is not in operate

   c. Calibration Potentiometer - varies calibration signals in both 125 and 40 positions to adjust setpoints.

Content/Skills	Activities/Notes
5. Status and Indicator Lights	**LO H**
a. 4F = Each channel has 3 light cluster on apron. Red "Hi-Hi", Amber "Hi", White "Dn Scl or inop". Rod block display has "IRM Detector Position", "IRM Downscale", "IRM Inop" and "IRM-APRM". "IRM-APRM" = any upscale IRM with any APRM downscale (Mode Switch in S/U or refuel).	**Q. During a Rx S/U an I&C tech takes IRM 18 mode switch to standby. What would occur? A. If the Rx mode switch is in startup a ½ scram will be received if the Rx mode switch is in Run only an alarm will be received.**
b. 3R/5R = Four seal in lights	
• "Downscale trip", white.	
• "High trip", amber.	
• "High-High trip", red.	
• "Inop", white.	
c. SRM-IRM aux. drawers = "Bypass", white.	
D. Electrical Interlocks and Auto Trips	**LO D,F,J**
1. IRM High-High Flux or Inop (Alarm/Scram)	**Review RAP G-1-e & G-2-e**
2. IRM High Flux (Alarm/Rod block)	**Review RAP G-3-e**
3. IRM Downscale (Alarm/Rod block)	**Alerts operator to bottom of range scale**
4. IRM Detector Position Rod block	**Review RAP H-7-a**
a. Setpoint = Detector not fully inserted with mode switch in S/U or Refuel.	
b. Bypassed in RUN.	
c. Indicated on rod block display on 4F.	
5. Reactor Pressure < 850 psig Interlock	
a. Setpoint = Pressure < 850# and any IRM channel in Range 10 or mode switch in Run).	**≥ 825 psig (Tech Spec) Rx scram if > 600#**
b. MSIV closure and possible Rx scram.	
E. Normal Operations	**LOs G,I**
1. Energized per Procedure 402.1.	
2. Operated per Procedure 402.2.	**Read precautions an limitations for each**

3. Bypassed per Procedure 402.4.

4. Startup per Procedure 201, Section 4.6.2., 4.9, 6.6, 6.30-6.31, 6.50, 6.54.3, 6.5.4.7 and 6.54.8.

5. Shutdown

   Per Procedure 203 and 402.3.

Read precaution and limitation for both

F. System Interrelations

LO L

1. 24/28 VDC - power to IRM power supplies and trip relays. Loss = downscale indicator and rod block and scram trips.

2. 125 VDC - control power to detector drives. Loss = no detector motion.

3. Vital AC - power to recorders and detector drivemotor. Loss = no recording and no detector motion.

4. RPS - IRM's provide input to RPS. Loss = no effect on IRM's but reactor scram.

5. RMCs - IRM's provide rod blocks to RMC. Loss of RMC = no impact on IRM's.

Provide an interim summary prior to covering LPRMs covering the following:
- **IRM components**
- **IRM indications**
- **IRM trips**
- **IRM controls**

½ Scram per channel

G. Specification

LO L

1. Technical Specifications

   a. Sections 2.3.A.2, 2.3.G, Table 3.1 (Sect A.9, K.3 & K.6), 3.3.H, 4.1, Table 4.H (Sect. 16 & 17)

2. Standing Order #1, Section B

Read & cover bases

H. Operational Experience

1. IRM SCRAM during off normal power maneuver (OE 1729).

   a. Following fundamental weaknesses were identified:

      - Reactivity Management
      - Questioning Attitude
      - Nuclear Safety Culture
      - Control Board Awareness
      - Procedural Weakness

Cover fundamentals which "broke down"

Ask students for root causes, how can be avoided here.

V. LOCAL POWER RANGE MONITORS LPRM System

Slides 81 - 102

LPRM System

A. System Functions

LO A

Provide signals proportional to local thermal neutron flux:

1. To APRMs for calculated average core power.
2. To Powerplex Computer for nuclear and thermal performance.
3. Provides local and remote indications, alarms, and trip signals.

B. Component Descriptions

LO A,C

1. Detector Assemblies

a. 31 Assemblies = 42' wet tube, 4 fission chambers/ detectors each 36" apart, cables, and TIP dry tube. Wet tube holes cool detectors.

31 assemblies X 4 detectors = 124 detectors total

b. String Location = X,Y coordinate. (Core radial location) Detector location = 2 axis + D = 126" from core bottom, C = 90", B = 54", A = 18".

c. Detectors in narrow-narrow gaps, calibrated to individual four adjacent corner rod surface heat flux, [every fourth water gap].

Rods in wide wide gaps

d. Core Symmetry

1) Did not put detectors in all narrow narrow gaps, IRM/SRM tubes occupy 12 penetrations.

Limit total # of RPV penetrations

2) Fuel load and rod patterns symmetrical - each quadrant mirror image of other three.

3) Core rotationally symmetrical. Rotate 3 quadrants until over fourth = each water gap has string in some quadrant. "Virtual or reflected" strings.

2. Detectors

64 LPRMS feed 8 APRMS; 60 LPRMS do not feed APRMS

a. Fission chamber 1" X 0.16", pressurized to 1.3 atmos. argon. Detector voltage = 100 VDC.

b. No gamma compensation. Gamma flux is proportional to reactor power.

c. Provide overlap with IRM System via the APRM's.

d. Remain in core sensitivitity is reduced over time. Detectors are periodically calibrated using the TIP system.

3. Flux Amplifiers

Amplifies detector current output to drive meters, recorders and trip units. 0-10 VDC out correlated to 0-125 watts/cm^2 surface heat flux. Amplifier gain is adjustable.

4. Trip Units

a. 2 Types: Upscale and downscale. Both have reference and signal inputs. Each produces seal-in and auto-reset output.

b. Seal-in: Local indicator lights on LRPM or LPRM-APRM auxiliaries drawers and must be manually reset.

c. Auto-Reset: Amber indicator lights and alarms on 4F.

5. Power Supply and Monitors

LO B

Supply individual LPRM amplifiers with + 100 VDC and ± 15 VDC.

± 15V are referenced to + 100V circuit instead of GND

Meter provides full scale indication for + 15V and -15V check. When at 100V position, meter = actual VDC.

6. LPRM Auxiliaries Drawer

Location = 3R/5R; upscale, downscale and bypass indicator lights for LPRM's not assigned to APRM channels.

4 Drawers total

7. LPRM-APRM Auxiliaries Drawer

4 Drawers total

Same as LPRM auxiliaries drawer, but for LPRMs assigned to APRM channel

C. *Instrumentation*

LO H

1. 4F - Individual meters on full core display. Location corresponds to core location

0-125 watts/cm^2

2. 3R/5R

   - 8 APRM meters. Can select assigned LPRM's via switch.
   - 32 power supply and monitor units can display LPRM'flux it powers.

D. Controls and Interlocks

LO H

1. Meter Function and LPRM Selector Switches

   Location = APRM meter and test panels (3R/5R).
   Positions = 1 thru 8, and average.

Selects individual LPRM reading or average of all 8

2. Power Supply and Monitor Mode Switch

   Positions = 1/2/3/4/+15V/-15V/100V.

Q. When will the amber lights on 4F associated with an LPRM illuminate?
A. LPRM Hi, LPRM downscale or LPRM bypassed.

3. Flux Amplifier Mode Switch

   Positions = Oper/Cal A/Cal B.

   Calibrate position: switches input to front panel calibration jack.

4. APRM Drawer Input Bypass Switches

   8 rotary switches inside each APRM drawer. Counter Clockwise bypasses individual LPRM input to APRM.

Gives white "Input Bypass" light on LPRM/APRM aux. Drawer & amber light on full core display.

5. Status and Indication Lights

   a. 4F

   Individual LPRM UPSCL/DNSCL/Bypass Lights (amber)

   Location - Full core display next to LPRM meter.

One light for all listed "trips"

LO H

   b. Miscellaneous 3R/5R

      1) Auxilaries drawers individual LPRM bypass toggle switches and individual lights for bypass (white), upscale (amber), and downscale (white).

Switch positions: Bypass & normal. Only bypass LPRM alarms.

      2) Flux amplifier white calibrate indicating light.

LO D,J
Review RAP G-6-f

E. Interlocks & Trips

1. LPRM Hi Alarm: Setpoint 97 w/cm^2
   Rod Block if LPRM is an input to an APRM.
   Amber Light on 4F display for alarming LPRM illuminates.

Content/Skills	Activities/Notes
2. LPRM DNSCL ALARM: Setpoint 2% Amber light on 4F for alarming LPRM illuminates.	
Rod Block when an LPRM feeding an APRM is downscale and mode switch in RUN.	**Review RAP G-7-f**
- Or INOP (HV lost, module removed, or Flux amp switch not in operate)	
F. Power Supplies	**LO B**
1. **Vital AC: PSP – ½ (120 VAC to flux amp and aux trip relays.**	
G. Operation	**LO I**
1. Procedure 403	**Review precautions & limitations**
H. Specifications	
1. Technical specification	**LO K**
a. Section 3.1.B, 3.1.C, 3.10.C, Table 4.1.1, (Sect. 32)	
2. Standing Order #1, Section #28.	**Discuss CAP O2002-1937 LPRM spiking**
I. Industry Events	
1. OE 8742: Spurious LPRM spike results in a full Rx scram.	**Explain what is causing LPRM spiking (whiskers) refer to problem resolution response in CAP O2002-1937**
a. Following fundamental weaknesses were identified.	**Prior to covering APRMs provide an interim summary covering the following:** • **LPRM function** • **LPRM components** • **LPRM indications** • **LPRM controls**
• Reactivity Management • Inadequate implementation of GE SIL 500 • Questioning Attitude • Troubleshooting	**Review with students which fundamentals would have prevented this event.**

Content/Skills	Activities/Notes
VI. APRM System	**Slides 103 - 135**
A. System Functions	**LO A**
1. Continuous indication and recording of bulk reactor power.	
2. Scram when fuel integrity threatened.	
3. Rod block on high or low signal and signal and system degraded.	
B. Component Descriptions	**LO A,C**
1. General - 8 LPRM's feed each APRM average amplifier, outputs to meters, and trip units. . Recirc flow is input for flow biased. Provides output to APRM high power scram and rod block units.	**Output signal is read in % reactor power**
• 2 APRM channels/quadrant.	
• APRM channels 1-4 use LPRM detectors A and C and input RPS-1.	
• APRM channels 5-8 use LPRM detectors B and D and input RPS-2.	
2. Flux Average Amplifier and Input Bypass Switches	
a. Produces 0 to 10 VDC proportional to average of unbypassed LPRM inputs.	**(0-10 VDC = 0-150% core thermal power)**
b. 0 to 10 VDC equal to 0 to 150% ratio thermal power.	
3. Count Circuit - generates signal proportionate to number of unbypassed units with selector switch in count position. Sends signal to APRM meter on 3R/5R.	**80% = all 8 LPRMS are inputting to APRMFeeds APRM inoperative trip circuit if <5 LPRM's operational.**
4. Output Meters and Recorders	
a. Local Average Core Power Meters at 3R/5R (8 total).	
b. 4-4 channel digital recorders (4F).	
5. Recirc Flow Monitors	**Recorders display APRMS or IRMs or both.**
a. Two flow monitors provide input signal for flow biased rod blocks and scrams. 3R supplies APRM channels 1-4, 5R = 5-8.	

Content/Skills	Activities/Notes
b. Flow transmitters from each loop through individual square root converters to 2 summers on both 3R and 5R, to monitors: 5R feeds total flow on 4F, 3R feeds total recirc flow recorder on 3F. Both monitors feed both comparators and FCTR cards.	**Flow transmitter measure dP across venturi** **Monitor generates 0-10 VDC signal proportionate to 0-100% flow**
c. Comparators monitor difference between recirc flow monitor outputs.	
d. Rod blocks on high recirc flow, or high differential flow. Scram on INOP.	
6. Flow control Trip Reference Card (FCTR)	
a. One card for each APRM channel (in drawer).	
b. Receives input from flow monitors. Produces an output reference trip signal (reactor power for the given flow), to the dual trip units.	**Review CAP O2002-1405 APRM #4 FCTR card status. (Slow blinking red light on INOP LED.)**
c. Cards have a microprocessor with EPROM. Prorammed to "track" the power operation curve and provide rod block and scram reference signals.	
d. Status indicating lights, curve select LED, curve active light provide status indication. Operated per procedure 403 & 403-5 & 6.	
7. APRM Aux Trip Relays 2 types = upscale and downsale. Operation same as LPRM trip units. Auto-reset output also sent to RPS and/or RMCs. APRM inoperative and downscale units input to both.	
C. Instrumentation	**LO H**
1. Average core thermal power (0-150%) = eight meters on 3R/5R and four digiter recorders on 4F (IRM-APRM).	
2. Each channel has 3 light cluster on 4F APRM = "HI-HI" (red), "HI" (amber), "DNSCL or INOP" (white).	
3. 4F Rod Block Display:	
a. APRM High Flux.	
b. APRM Downscale.	
c. APRM Inop or Trip Bias.	
d. IRM-APRM.	

Content/Skills	Activities/Notes
4. Six seal-in lights for each channel on auxilaries drawers:	
a. Scram = scram condition for channel (red).	
b. Alarm = rod block (amber).	
c. Inop (white).	
d. Downscale (white).	
e. APRM Bypass (white) = channel bypassed on 4F.	
f. Input Bypass (white) = assigned LPRM bypassed.	
5. Three Seal-in lights for each flow monitor	
a. Comparator mismatch (amber) = recirculation flow mismatch. (10% or 16,000 gpm)	**Rod block**
b. Inop scram (red) = Inoperative scram trip signal.	**Scram & rod block**
c. Upscale (amber) - High recirculation flow. (120%)	**Rod block**
6. FCTR	
a. Inop satus led (red/green) – steady or blinking	
b. Active curve LED (yellow/green)	
D. Controls	**LO H**
1. IRM-APRM Recorder Switches	**4F controls**
Left and right arrow keys on recorder changes displayed channels. Up and down arrows change display type.	
2. APRM Bypass Switches (Joysticks)	**LO E**
a. Two switches on 4F. Bypass 1 APRM channel/RPS division. Positions = Unnamed Mid/CH1/CH2/CH3/CH4, same for Channels 5-8. Positions mutually exclusive and electrical interlock prevents bypassing more than 1 channel/quadrant.	
b. When channel is bypassed all protection functions and alarms are bypassed.	
• "HI-HI", "HI" and "DNSCL or INOP" lights on 4F and "APRM Byp" light on 3R/5R LPRM – APRM aux. Drawer lit.	

Content/Skills	Activities/Notes
• APRM flux level still operates.	
3. APRM Inut Selector Switch	**LO H**
Positions	**3R/5R controls**
• Average = averaging amplifier output.	
• Flow = output of assigned flow monitor.	
• LVPS = full scale +15V or -15V (LVPS switch).	
• Count = number LPRM's in operation.	
• 1-8 = display LPRM input.	
4. LVPS Switch = +15 or -15 to meter when function switch in "LVPS".	
5. APRM Mode Switch	**Q. What must be performed by a crew prior to bypassing APRMs or LPRM inputs to APRMs?**
Positions	**A. Refer to procedure 403 and refer to Tech Specs for allowable configuration of APRMs and LPRM inputs to APRMs.**
• Operate = normal. Removing switch from normal position will generate a ½ scram.	
• Standby = normal except given inoperative signal (if not bypassed).	
• Zero = disconnects inputs to adjacent amplifiers and meters.	
• Power = testing of average circuit.	
• Power & Flow = no longer used	
6. Power Test Pot.	
Used for variable input when mode switch in power position.	
7. Flow Monitor Lamp Test Push Button	
• Lights all 3 test lights (door-in), Push lamp to reset.	
Positions -	
8. Flow Monitor Power Supply Switch	**Taking lower nest power switch to off will give inop scram**
• One for upper and lower nest, line on or off.	

Content/Skills	Activities/Notes
9. APRM Input Bypass Rotary Switches	
Location = inside each APRM drawer. When LPRM bypassed, white "Input Byp" light on aux drawer front illuminated.	**Rotate Counter Clockwise to bypass**
E. Interlocks and Trips	**LO D,F,J**
1. APRM High-High/Inop	**RAP G-1-f/G-2-f**
• Trip setpoint in "Flow Biased" (FCTR). Max setpoint of 118%.	**Reinforce selfchecking, peer checking and procedure compliance when bypassing LPRM inputs to APRMs.**
• Generates trip signal to RPS.	
• Inop - Mode selector switch not inoperate/<5 op. LPRM inputs/module removed.	
• Also sends rod block to RMCS	
2. APRM High	
• Flow biased rod block (FCTR) to RMCs	**RAP G-3-f**
• Max. setpoint of 113%	**≈ 5% < scram setpoint**
3. APRM Downscale (Rod Block)	**RAP-G-4-f**
• Rod block signal to RMCS if in RUN.	**GE 237E566, Sh #1**
• Trip signal to RPS if in RUN and "associated" IRM either HI-Hi or Inop.	
4. APRM Flow Bias Off Normal	**RAP G-5-f**
a. Comparator Mismatch	**Q. RPS system I M-G set output breaker trips while the plant is at 100% power. What effect will this have on NIs?**
10% difference between outputs (16000 gpm)	**A. APRMs 1, 2, 3 & 4 fail downscale due to loss of power.**
• Rod block signal to RMCS (via RPS)	
• Rod block display and rod block alarm	
b. Inop	
• -6.25% flow or loss of power	
• Trip signal to RPS and rod block to RMCS	

Content/Skills	Activities/Notes
5. Flow Upscale (120%) Sends rod block signal to RMCS (via RPS) 6. Electrical Interlock – only 1 APRM can be bypassed/quadrant.	
F. Power Supplies • PSP-1/2: Dual trip units, aux trip relays, flow monitors • CIP-3: IRM/APRM Recorders	**LO B**
G. Operations 1. Procedure 201, Sec 6.53 & 6.54. 2. Operated per Procedure 403, Sections: 5.1.3, 5.2, 5.3, 5.4	**LO G,I** **Review precautions & limitation**
H. Specifications 1. Technical specifications Sections: 2.1.A/B, 2.3.A.1, 2.3.A.3, 2.3.B, 3.1.B, 3.1.C.1, 3.10C, Table 3.1.1 (Sect A.8 & A.B.13, K.4 & k.5), Table 4.1.1 (Sect 11 & 12) 2. Standing order #1, Section 12 3. Core Operating Limit Report • MCPR Restriction (figure 5)	**LO K** **Prior to covering Tips provide an interim summary covering the following:** • **APRM function** • **APRM components** • **APRM trips** • **APRM indications** • **APRM controls**
I. Operational Experience 1. NER OC-02-020: LPRM Bypass switch found out of position. a. Following fundamental weaknesses were identified • Procedure adherence • Pre job briefs • Questioning attitude • Reactivity Management	**Discuss with students how using fundamentals would have prevented this event.**

VII. TRAVERSING IN-CORE PROBE

Slides 136 - 175

A. System Functions — LO A

1. TIP = measure axial neutron flux at 31 radial locations. Used to calibrate LPRMS.

2. TIP Purge System = maintain dry atmosphere in TIP tubing, indexers, and drive mechanism housings. Necessary to:

   a. Minimize corrosion of drive cable. — (Low carbon steel)

   b. Prevent lubricant breakdown.

   c. Reduce signal cable insulation breakdown.

B. TIP Component Descriptions — LOs A&C

1. Detectors - Pressurized with Ar., Volt = 100VDC (approx.). — Same as LPRM detectors

2. Drive Cables - Coaxial, connects detector to drive: Helical carbon steel wrap which covers signal lead.

   - Protects signal lead.
   - Low friction means of movement.
   - Rack component of rack and pinion drive.

3. Detector Drive Mechanisms

   - Moves detectors (forward, reverse, high and low speed).
   - Transmit detector outputs to flux probe monitors.
   - Generate detector position data.

   Reversible two speed motor and a Gleason cable reel assembly inside gas tight metal enclosure controlled by drive control units on 4R.

   - Cable reel minimizes noise by eliminating brushes and slip rings.
   - Detachable hand crank for manual operation. — (Must remove coupling chain to drive motor)

   Located: TIP Area, Reactor Bldg. 38'. Drive mechanism 1 & 2 = MCC1A21, 3 & 4 = MCC1B21. — LO B

4. Shield Chambers

Provide shielding for retracted detectors. Cylindrical cask filled with lead shot. Guide tube passes thru center. Location: TIP Area, Reactor Bldg. 38'.

5. Ball Valves

   - Solenoid Op. Open when detector lens shield charged on forward travel & shut when fully retreived
   - Auto Op or manual
   - On a primary containment isolation signal, all detectors will return & ball valves close.

6. Shear Valves

   Emergency method to seal leaking guide tube.

   Hi drywell pressure or lo-lo water level

   Wedge-shaped guillotine squib valve.

   Keylocked switch on associated valve control monitor panel.

   Squibs fire-force - guillotine down - shears guide tube and detector cable –(seals tube like gate valve. Aluminum insert deforms against guillotine. Dual primers and firing circuits. When fired forces indicator link away from contacts - light on valve control monitor - physical proof of valve operation. Power supply = 125VDC Panel E.

   Panel 4R

7. Indexers

   Couples input guide tube to any one of ten output guide tubes. Movable section of tube connected to electric motor driven indexing gear. Cam assures alignment. Location: Inside Drywell.

   One per drive mechanism (4 total)

8. Four Way Connector

   Location: Inside Drywell. Connects Position 10 of each indexer to 28-25. For cross calibration of TIP channels.

9. Control and Monitoring

   Drive control units, flux probe monitors, valve control monitors are located on Panel 4R. Power supply = Instrument Panel 4B (120VAC), and valve control also gets 125VDC from Panel E.

   LO B

Content/Skills	Activities/Notes
C. TIP Purge System	**LO A,C**
1. Makes up either N^2 or Instrument Air to each of 4 indexers, at 0.8 to 1.2 psi above drywell pressure. Gas leaks from indexer & guide tube joints into drywell.	**(Outleakage to keep out moist D.W. air)**
a. Lined up N_2 when inerted, instrument air when de-inerted.	
b. Supply thru:	
• V-23-67 manual isolation valve.	
• V-23-68 relief valve (100 psig).	
• In-line flow indicator	
• V-23-69 pressure regulator (range 0-5, set 0.8-1.2 psid).	
• V-23-70 TIP purge isolation valve controlled from 4R, shuts on primary containment isolation.	
• V-23-71 check valve. Backs up isolation valve.	
All located outside Drywell, N.W. corner Reactor Bldg. 23'6".	**Tip purge panel**
c. Inside Drywell:	
• V-23-145 relief valve 4 psid.	
• V-23-161 vacuum breaker 4 psid	
Both in case regulator can't track during integrated leak rate testing.	
• Branch lines to each indexer housing.	
• Blowout plug in each indexer P >5 psid with drywell.	
d. V-23-151 supplies reference signal for V-23-69, via a restricting orifice. R.O. limits flow from drywell if sensing line breaks. V-23-150 = Manual bypass around regulator for operation if V-23-69 fails.	
e. Five valve manifold on TIP Purge Panel for isolation testing and calibration.	

Content/Skills	Activities/Notes
D. Instrumentation and Controls	
1. TIP Flux Probe Monitors	**LO H**
• Each serves two channels, consists of one power supply and monitor module, and 1 flux amplifier module.	
a. Power Supply and Monitor Module = +100VDC detector volt, ±15VDC for amp.	**3 & 4 positions, not operational**
Rotary switch and 0-125 meter functions:	
• +15V and -15V, meter defect full scale.	
• 100V position, meter reads VDC.	
• 1 position, Channel 1	
• (or 3) flux amp outlet.	
• 2 position, Channel 2 (or 4) flux amp outlet.	
b. Flux amp module switch functions	
• Operating position, amplifiers connected to detector inputs.	
• Cal. A position, Channel 1 (or Channel 3) input to ext. test jack.	
• Cal. B position, Channel 2 (or Channel 4) input to ext. test jack.	
White cal. light in Cal. A or Cal. B positions.	
2. Drive Control Units	
Monitors switch positions, auto functions and travel limits and issues drive and control signals to TIP components.	
a. Mode Switch Positions:	
• Off = Deenergize internal power supply.	
• Manual = Detector position controlled with manual switch.	**Detector will auto drive fwd to Core TOP limit then reverse to shield chamber**
• Auto = Detector position auto using auto start button.	

Content/Skills	Activities/Notes
b. Channel switch operates indexer. Positions = 1-10. Card on each drive control unit = Indexer positions versus coordinates.	**Channel switches should only operate in clockwise direction.**
c. Auto Start Pushbutton - Mode switch must be in AUTO.	
d. Manual Switch Positions:	
• Off = Enables auto function of mode switch.	
• Forward = Detector toward top of core. Forward = Detector toward top of core.	**Both forward and reverse override auto function of mode switch (stops detector motion)**
• Reverse = Detector toward shield chamber.	
e. Scan Switch - Controls recorder.	
• Off = Produces scan independent of operator control.	
• On = Auto scans when detector between core limits.	
f. Low Switch - Controls speed of drive motor.	
• Off - Detector speed auto as function of position.	
• On = Drive in low speed regardless of detector position.	**3 in/sec = low speec** **1 ft/sec = fast speec**
g. Core Limit Switch - Which limit displayed on lower digital display. Positions = top/bottom.	
h. Manual Valve Control Switch - Position of associated ball valve.	
• Closed = Auto closed ball valve when detector in shield chamber.	
• Open = Opens without energizing drive motor.	
i. Core Limit Display - Digital, top or bottom limit. Unassigned indexer positions read 0010 bottom and 0020 top.	
j. Detector Position Display - Continuous digital position of detector. 0004 position = in shield. Data comes from drive mechanism.	
k. Core Top Light – (White) detector at top limit.	
l. In-Core Light - Detector between core limits.	

Content/Skills	Activities/Notes
m. Ready Light - Indexer aligned to selected channel.	
n. In Shield Light - Detector in shield chamber.	
o. Scan Light - Scan switch on, detector has reversed direction at top of core, computer ready to accept output and in-core light lit.	**Switch not used**
p. Low Light - Whenever detector travelling at low speed or low switch in ON position.	
q. Reverse Light - Detector moving toward shield chamber.	
r. Forward Light - Detector moving toward top of core.	
s. Valve Light - Bright when ball valve open, dim = shut.	
t. Read/start Pushbutton - Unlabeled, red, above manual switch, tells computer scan is about to begin.	**Normally used when in TOP limit**
3. Valve Control Monitors - Each contains control and indication circuits for shear and ball valves and N_2 purge circuits for 2 channels.	
a. Monitor/Fire Switches - Keylock, fire shear valve squibs. Fire = 125VDC to fire circuits, monitor = trickle charge.	**Q. While running Tips for Rx Engineering a full scram is received and Lo Lo Rx water is reached. What will be the response of the Tip system?**
b. Squib Monitor Light - Lit when squib detonated or firing circuit open or power lost to monitoring circuit.	**A. The tips will react automatically and go in shield. Also the ball valves will close.**
c. Shear Valve Monitor Light - Lit when shear valve actuated (indicating link forced away from position indicating contacts).	
d. Ball Valve Open Light – White Closed Light – Red	
e. Time Delay Light - Green, valve open and time delay satisfied.	
f. Purge Switch - Controls supply valve V-23-70	
• On Position = Opens valve, lights red purge light.	
• Off Position = Shuts valve, deenergizes light.	
4. Panel 11F	
a. Closed Light - Green, all 4 ball valves shut.	
b. Open Light - Red, any ball valve not fully shut.	

Content/Skills	Activities/Notes
c. Valve Isolation Reset/Cont. Switch - Directly below lights	
• Open = Resets system isolation if signals cleared and allows individual ball valves and purge valve to open from 4R.	
• Closed = Retracts detectors, interlocks all ball valves shut, shuts purge valve V-23-70.	**Actions identical to isolation signal primary containment**
• Spring returns to unlabelled mid.	
5. TIP Purge Panel	
a. D/P Indicator - Purge gas pressure to drywell, 0-10 psid.	
b. In Line Flow Indicator - Location: Near purge panel, indicates purge gas flow upstream of pressure regulator V-23-69.	
E. Interlocks	**LO F**
1. Drive Control	
a. 5 sec. Time Delay - Limit switch when detector leaves chamber. If ball valve not open, drive motor forward power disconnected operator may retract detector. Green time delay light on if valve opens.	**Reinforce Rad Pro fundamentals.** • **Prior to running Tips the area must be posted by Rad Pro.** • **During S/D conditions with the drywell open Tips can't be run unless permission is granted by Rad Pro.**
b. Detector Speed	
• Slow = 15 ft/min - between shield chamber and outboard end of indexer.	
• Fast = 60 ft/min - between indexer and core bottom limit.	
c. Indexer Position - Prevents more than one indexer to Position 10.	
d. Ball valve limit switch opens valve when detector leaves shield and shuts valve when detector reenters.	
2. TIP System Isolation - Part of primary containment isolation	**Lo lo reactor water level or high drywell pressure**
• Purge valve V-23-70 shuts.	
• If any ball valve open, detector retracted until shut limit switch shuts ball valve.	

Content/Skills	Activities/Notes
Can also be isolated by TIP Valve Isolation Reset/Cont. switch.	**Will receive Alarm G-8-e (ie purge press.)**
F. Alarms	**LO J**
1. "TIP Purge Press Hi/Lo" (G-8-e) From d/p switches. High = 3.0, Low = 0.5 psid.	**Review RAPS**
2. "TIP Squib Continuity" (G-8-f) Squib valve fired or continuity lost in monitor circuit. Actuates on current < normal mon. trickle current.	**Firing shear valve will cause drive mechanism to reverse (will not stop)**
G. Normal Operations	**LO I**
1. Startup per Procedure 405.1.	**Read precautions & limitations**
2. Normal Operation per Procedure 405.2.	
H. Abnormal Operations	
1. Shear Valve - Fired only if LOCA, A TIP tube is leaking, and:	
a. Detector cannot be withdrawn or	
b. Ball valve does not seal properly.	
Before firing shear valve place manual valve control in closed and mode switch in OFF.	
• Fired by placing Keylock Control Switch to Fire. "Squib Monitor" and "Shear Valve Monitor" lights light. "TIP Squib Continuity" alarm actuates.	
I. System Interrelations	**LO L**
1. NSSS - TIP provides calibration of LPRM's. Loss of TIP = degraded thermal performance data = power reduction or S/D.	
2. Containment Atmospheric Control - Total loss of TIP Purge = rad. airborne in TIP Area.	
3. Instrument Air - Inability to purge system.	
4. 480VAC - Drive mechanisms, loss of either 1A21 or 1B21 means TIP inop.	
5. 125VDC - Can't fire squibs, V-23-70 fails shut (loss of purge pressure).	

Content/Skills	Activities/Notes
6. 120VAC - Flux probe monitors, recorders, and isolation circuitry of valve and control monitors. Loss = system isolation signal and inoperation of all 4 channels.	
7. Plant Computer The TIP System contains a central processing unit for data acquisition and an interface to the plant computer for power distribution computations.	
J. Technical Specifications	
Section 3.1.C.2	**LO K**
K. Industry Events	
1. OE 12504: APRM flow biased scram setpoints non-conservative a. Following fundamental weaknesses were identified: • Nuclear Safety Culture • Reactivity Management • Self Checking • Questioning Attitude	**Discuss with students which fundamentals were missed and how we would prevent these types of events.**
2. OE 6656: LPRM detectors incorrectly wired to APRM drawers. a. Following fundamental weaknesses were identified: • Self Checking • Verification Techniques • Reactivity Management	

VIII. SUMMARY

A. The purpose of the Neutron Monitoring System is to provide the capability to monitor neutron flux in the reactor core from shutdown conditions to the neutron flux anticipated in the case of overpower conditions requiring reactor scram. Three basic types of chambers and signal conditioning equipment are used. The neutron flux is monitored over the entire range by the Source Range Monitoring (SRM) System, the Intermediate Range Monitoring (IRM) System, and the Local Power Range Monitoring (LPRM/APRM) System. The fission chambers used in the three nuclear instrumentation systems are essentially the same. However, the various systems operate at different voltages and utilize different gas (argon) pressures. The Traveling in Core Probe (Tip) system is used for calibration of the LPRM detectors and to determine axial neutron flux levels for power distribution. Nuclear instrumentation provides automatic protective functions by providing alarms, rod blocks and scram signals.

B. Review Questions:

1. How are gammas compensated for in the SRM circuitry?
   Answer: The Pulse height discriminator is used to remove the weaker gamma signals.

2. List the rod blocks associated with an SRM?
   Answer: SRM HI or INOP, Downscale, SRM detector position

3. List the rod blocks associated with an IRM?
   Answer: IRM HI or INOP, IRM Downscale, IRM detector position

4. List the Scrams associated with the IRMs.
   Answer: IRM HI HI or INOP, Range 10 > 600 psig but < 850 psig Reactor pressure.

5. What is the purpose of the TIP system?
   Answer: The Traveling in Core Probe (Tip) system is used for calibration of the LPRM detectors.

6. How many LPRM inputs to an APRM can be bypassed without making the APRM INOP?
   Answer: No more than 3

7. What will generate a SRM period alarm?
   Answer: A single SRM channel with a period of less than or equal to 30 seconds

8. Which fission chamber is at the highest gas pressure and operates at the highest voltage?
   Answer SRM's

9. What prevents two APRM's in the same quadrant from being bypassed?
   Answer: The bypass switches for the APRM's have an electrical interlock.

10. Which NI's can be replaced from the bottom of the vessel?
    Answer: IRM's and SRM's

11. Prior to running TIP's what must be performed in the TIP area?
    Answer: RAD PRO must post the area.

12. How many LPRM inputs feed an APRM?
    Answer: 8

13. What will occur if an IRM is placed in range 10 when Reactor pressure is <850 psig?
    Answer: MSIV's will close and if Reactor pressure is > 600 psig then we will also receive a full scram

14. When are IRM downscale Rod Blocks bypassed?
    Answer: Range 1 or in the Run Mode

15. When are SRM Rod Blocks bypassed?
    Answer: In the Run Mode and when the IRM's are in range 8 or greater

C. Review learning objectives with students.

IX. ADDITIONAL INSTRUCTIONAL METHODS:

A. Replica Simulator

1. Observe NI response to a critical reactor during startup.
2. Withdraw SRMs/IRMs.
3. Reset trip signals.
4. Bypass NIs.
5. Operate IRM range switches during Reactor Startup.

Note:
Maximize use of methods suggested in this section as time permits.
Additional instructional methods would be used for an initial license class.

ATTACHMENT 1
TASKS/TERMINAL OBJECTIVE:

*21501(01)001	In the Control Room and plant, lineup nuclear instru-mentation IAW Procedures 401.1, 402.1, 403.1 & 405.1.
*21501(01)005	In the Control Room and plant, monitor the nuclear instrumentation system for proper operation IAW authorized limits, technical specifications and approved station operating procedures.
21501(01)019	In the plant, return bypassed nuclear instrumentation channels to service.
21501(01)020	In the plant, remove a failed source range module from service or return a repaired source range module to service.
21501(01)021	In the Control Room, bypass and un-bypass Intermediate Range Monitor channels IAW Procedure 402.4.
*21501(01)022	In the Control Room, bypass and un-bypass local and average power range monitors IAW Procedure 403.3.
*21501(01)023	In the Control Room, operate the Nuclear Instrumenta-tion Systems IAW Procedures 401.2, 401.3, 402.2, 402.3 & 403.2 during startup, shutdown & abnormal conditions.
21501(01)024	In the Control Room during plant operation, bypass selected nuclear instrumentation channels for surveillance testing IAW T.S., sections 3.0 and 4.0.
*21501(01)025	In the Control Room, place the traversing in-core probe sys in service to obtain TIP traces IAW Procedure 405.1.
*21501(01)401	In the Control Room, operate the TIP system to obtain trace data and route to the plant computer via the MUX IAW Procedure 405.1 and 405.2.
21501(01)402	In the Control Room, during a Rx start-up, perform the IRM range 6/7 correlation IAW Procedure 402.2.
21501(01)403	In the plant, operate the IRM Range Switches IAW Procedure 402.2 and/or 402.3.
*21501(01)404 21501(04)301	In the plant/Control Room, demonstrate the ability to satisfactorily lineup the TIP system and place in standby readiness IAW Procedure 405.1.
21502(01)012	In the Control Room during a plant startup, perform SRM detector "NOT IN" rod block test IAW the applicable portions of surveillance 620.4.004.
*21502(01)017	In the Control Room, conduct a front panel test of the source range monitoring instr. IAW Procedure 620.4.004.

ATTACHMENT 1
TASKS/TERMINAL OBJECTIVE
(continued)

*21502(01)013 In the Control Room, conduct a functional test of APRM instruments IAW Procedure 620.4.002, APRM Front Pnl Check.

*21502(01)014 In the Control Room, conduct an IRM/APRM instrument range overlap check as required by Procedure 201, Plant Startup.

*21502(01)015 In the Control Room, conduct a front panel test of IRM instruments IAW surveillance Procedure 620.4.005, IRM test and calibration.

*21502(01)016 CONDUCT APRM-HI FLUX IN S/U OR REFUEL FUNCT. TEST

The entry of the mask 'XXXXX(01)XXX', 'XXXXX(02)XXX' or 'XXXXX(05)XXX' beneath any task number indicates that the associated job position is responsible for maintaining familiarity with the actions of the parent task and the implications to plant operation of the performance of this task. Actual ability to perform the task need not be demonstrated in either the plant or on the replica simulator unless specifically requested by the Senior Manager Operations. This exemption does not apply to the Senior Reactor Operator position (02) if the parent task is a licensed Control Room Operator (01) task as the SRO is required to maintain competency of all licensed operator duties by 10 CFR 50.55."

"TERMINAL OBJECTIVES AND LEARNING OBJECTIVES ARE MARKED WITH THE APPLICABLE JOB CODE IN PARENTHESES "
( )". THIS IDENTIFIES THE OBJECTIVES APPLICABLE TO EACH JOB CATEGORY AS FOLLOWS:

(01) - Licensed Operators (NPO - 3 and 4)
(02) - Senior Reactor Operators
(03) - Radwaste Operators
(04) - Non-Licensed Operators (NPO - 1 and 2)
(05) - Shift Technical Advisors
(06) - Duty Roster Personnel (EP)0
(07) - Applicable to all personnel

"ADDITIONALLY, ANY TASK OR TERMINAL OBJECTIVE WITH AN ASTERISK "*" PLACED TO THE LEFT OF THE TASK NUMBER HAS BEEN SELECTED FOR INCLUSION IN A CONTINUING TRAINING PROGRAM BY THE USER GROUP MANAGER."

Exelon Nuclear

PROCEDURE USE AND ADHERENCE

1. PURPOSE

1.1. Provide direction on how procedures are to be used and the expectations for adherence to all procedures approved at the location in which company or contractor personnel will conduct the activity. **(CM-1)**

1.1.1. This procedure does **not** apply to Work Packages, Work Instructions, Out of Service (OOS) Instructions, or Clearance and Tagging instructions.

2. TERMS AND DEFINITIONS

2.1. **Level of Use Category:** The designation of minimum required reference to the procedure during performance of the task relative to the probability of making an error and the impact of an error. Level of use designation does not relieve the user from performing the procedure exactly as written. There are 3 levels:

NOTE: All procedures that direct manipulation or maintenance of plant equipment shall be treated as 'Level 1 - Continuous Use' unless otherwise designated on the procedure.

2.1.1. **Level 1 - Continuous Use:** Reading each step of the procedure prior to performing that step, performing each step in the sequence specified, and where required, signing off each step as complete before proceeding to the next step.

2.1.2. **Level 2 - Reference Use:** Referring to a procedure periodically during the performance of an activity to confirm that all procedure segments of an activity have been performed, performing each step in the sequence specified and, where required, signing appropriate blocks to certify that all segments are completed. The procedure should be at the work location.

2.1.3. **Level 3 - Information Use:** An activity may be performed from memory, but the procedure is available, not necessarily at the work location, for use as needed to insure the task is being performed correctly and for training.

2.2. **Procedure:** A controlled document that specifies or describes what activity is to be performed. It may include methods to be employed, equipment or materials to be used, accept/reject criteria, and sequence of operations.

4.5.4. **If** a procedure step directs placing a component in a specific condition, **and** the component is already in that condition, **then** before continuing **DETERMINE** if the procedure is still the correct procedure for use with the existing plant configuration.

NOTE: Placekeeping applies to procedures that are Level 1 - Continuous Use, except alarm procedures and administrative procedures. Placekeeping is a process designed to help the procedure user track completion of each procedure step to ensure that all necessary steps are performed.

NOTE: During transients, placekeeping is not required in order to take actions to place the plant in a stable condition. When the unit is stable, review the procedures used to verify compliance.

4.5.5. **INDICATE** step completion using placekeeping methods such as checkmarks, initials, or recording data as stated by the procedure step.

1. **If** a procedure is being used repetitively to perform simple tasks, **then** place keeping may be suspended after the first use of the procedure with approval of the supervisor.

   A. The procedure must still be present at the job and available for reference.

   B. Approval shall be obtained from the job supervisor before place keeping is suspended.

4.6. User Capability

4.6.1. Actions may be performed by trained, qualified individuals as User Capability without a procedure provided that:

- No procedure exists for the action and
- The task is simple, short, and routine where the consequences of improper performance are not significant.

1. Examples of tasks considered within the capability of a qualified individual:
   - Minor adjustments of temperature, flows, or pressures of systems already placed in service.
   - Changing charts, drive speed gears, or slide wires on recorders.
   - Replacing lamps or fuses.
   - Adjusting packing on certain manual valves.
   - Setup of welding equipment.
   - Checking circuit voltages
   - Minor Maintenance activities as outlined in MA-AA-716-003, Tool Pouch/ Minor Maintenance or equivalent site procedure.

AmerGen
An Exelon/British Energy Company

OYSTER CREEK CONDUCT OF OPERATIONS

1. PURPOSE

1.1. To provide in combination with the Exelon Conduct of Operations Manual (OP-AA series of procedures) the general rules, policies and instructions pertaining to the overall operation of the Oyster Creek Facility.

2. TERMS AND DEFINITIONS

2.1. Site - the area within the security fence, also known as the Protected Area. Personnel in areas covered by the site paging system or in radio communication with the Control Room may go to the following areas and still be considered on site: any location within a five minute walk of a security access point allowing prompt reentry. Personnel with a vehicle and in radio communication with the control room may go to the following areas and still be considered on site: Fire Pond, Switchyard, Low Level Radwaste Storage Facility, North Yard Domestic Water House, or area between the canals and west of Route 9.

2.2. Operations Supervisor (OS) – SRO Required Position (SM, US, FS)

SM – Shift Manager
US – Unit Supervisor
FS – Field Superviosr

3. RESPONSIBILITIES

4. MAIN BODY

4.1 Defeating/Bypassing Interlocks and Engineered Safeguards

4.1.1 Operations Department is obligated by law to adhere to all requirements of the Operating License, Technical Specifications, Federal Regulations and other criteria established by the NRC to ensure safe operation of the plant.

4.1.2 Plant protective functions and engineered safeguards (including actuation signals) that are required to be operable shall only be bypassed when the following conditions are satisfied (**CM-2**):

1. The evolution is controlled by an approved plant procedure.
2. The Shift Manager has reviewed the applicability of the procedure with respect to current plant conditions and has granted permission or specifically directed the use of the procedure.

4.6.2.3 Survey Control Room indications for evidence of system malfunctions. Consider dispatching Operators to perform general inspection of other safety related systems not known to be tampered with.

4.6.2.4 Consult OP-OC-106-101 for notification requirements.

5.0 MAIN CONTROL ROOM CONDUCT

5.1 Licensed Operator Authorities

5.1.1 The responsible Operations Supervisor (SRO licensed) has the duty and authority to shut down the reactor or initiate an engineered safeguard system under the following circumstances:

- When instructed to do so by the Plant Management.
- When required by approved Station Procedures.

> NOTE
>
> Indicators and alarms are to be believed unless it is verified by other means (i.e., another indicator or direct observation) to be false.

- When operating parameters should have initiated a scram and no scram occurred.
- When operating parameters should have initiated a safeguard system and no initiation occurred.
- When in their judgment a situation exists which jeopardizes or threatens to jeopardize public or plant safety.
- When verified, operating parameters are trending such that an automatic scram is imminent or inevitable.

5.1.2 On-shift Reactor Operators have the duty and authority to shut down the reactor or initiate an engineered safeguard system under the following circumstances:

- When instructed to do so by an Operations Supervisor (SRO licensed).
- When required by approved Station Procedures.

> NOTE
>
> Indicators and alarms are to be believed unless it is verified by other means (i.e., another indicator or direct observation) to be false.

- When operating parameters should have initiated a scram and no scram occurred.
- When operating parameters should have initiated a safeguard system and no initiation occurred.
- When in their judgement a situation exists which jeopardizes or threatens to jeopardize public or plant safety.

5.1.3 The SM may designate concurrent verification in lieu of independent verification for those procedural steps requiring independent verification in accordance with HU-AA-101

5.2 <u>Logs and Record Keeping</u>

5.2.1 Logs are legal records and if any log readings are missed, the reason shall be stated on the log.

5.2.2 Data on logs or Tour Sheets which does not meet acceptance criteria or indicates some other deviation from satisfactory performance shall be clearly indicated and shall be circled with an asterisk and a clarifying note in the Comments section.

5.2.3 During power operations, the following logs shall be maintained by Plant Operations:

Main Plant

- Control Room Tour (20.70.01.13)
- Electronic Control Room Log (20.70.02.10)
- Turbine Building Tour Sheet (20.70.01.03)
- Intake Area Tour Sheet (20.70.01.03)
- Reactor Building/AOG Tour Sheet (20.70.01.02)
- Transmission Line Report (20.70.02.06)
- Control Room Alarm Sheets (20.70.02.03)
- Control Rod Status Sheet (20.70.03.07)
- Tech. Spec. Log

4.5.4. **If** a procedure step directs placing a component in a specific condition, **and** the component is already in that condition, **then** before continuing **DETERMINE** if the procedure is still the correct procedure for use with the existing plant configuration.

NOTE: Placekeeping applies to procedures that are Level 1 - Continuous Use, except alarm procedures and administrative procedures. Placekeeping is a process designed to help the procedure user track completion of each procedure step to ensure that all necessary steps are performed.

NOTE: During transients, placekeeping is not required in order to take actions to place the plant in a stable condition. When the unit is stable, review the procedures used to verify compliance.

4.5.5. **INDICATE** step completion using placekeeping methods such as checkmarks, initials, or recording data as stated by the procedure step.

1. **If** a procedure is being used repetitively to perform simple tasks, **then** place keeping may be suspended after the first use of the procedure with approval of the supervisor.

   A. The procedure must still be present at the job and available for reference.

   B. Approval shall be obtained from the job supervisor before place keeping is suspended.

4.6. <u>User Capability</u>

4.6.1. Actions may be performed by trained, qualified individuals as User Capability without a procedure provided that:

- No procedure exists for the action and
- The task is simple, short, and routine where the consequences of improper performance are not significant.

1. Examples of tasks considered within the capability of a qualified individual:
   - Minor adjustments of temperature, flows, or pressures of systems already placed in service.
   - Changing charts, drive speed gears, or slide wires on recorders.
   - Replacing lamps or fuses.
   - Adjusting packing on certain manual valves.
   - Setup of welding equipment.
   - Checking circuit voltages
   - Minor Maintenance activities as outlined in MA-AA-716-003, Tool Pouch/ Minor Maintenance or equivalent site procedure.

QUESTION #71

The following plant conditions exist:

- The reactor power has just been increased to 40% power
- Turbine-Generator is on the line at approximately 200 MWE
- A malfunction causes a bypass valve to fully open
- FLOW MISMATCH alarm (J-7-a) annunciates shortly after the bypass valve (BPV) opens

Answer the following:

a) Is FLOW MISMATCH an expected alarm for the stated conditions?

b) What is the operational significance of this alarm at 40% power?

A. **NO** this is **NOT** expected. The significance is that a steam line break has occurred in the Turbine Building.

B. **NO** this is **NOT** expected. The significance is that extraction steam has isolated from feedwater heaters.

C. Yes this is expected. The significance is that extraction steam has isolated from feedwater heaters.

D. Yes this is expected. The significance is that Turbine Anticipatory Scrams have been bypassed.

ANSWER: D

Question 71: Oyster Creek's position

Per UFSAR, section 10.2.1, the turbine bypass valve assembly consists of 9 bypass valves and will pass approximately 40% steam flow with all 9 valves open. This equates to each bypass valve passing less than 5% steam flow.

During the monthly surveillance of Turbine Bypass Valves (TBV), precaution 10.3.3 states that a load reduction of approximately 25 MWe will occur when each bypass valve is tested. This equates to approximately 4% power. The flow mismatch alarm is set for 7% steam flow, so one TBV fully open will not bring this alarm in. This was verified by one of the Shift Managers who stated that the flow mismatch alarm is never received when performing the TBV surveillance testing.

Based on the above information and the stem condition which states that only one bypass valve has failed open; the FLOW MISMATCH alarm would NOT be expected to come in and the only condition which would justify the mismatch alarm would be a steam line break in the Turbine Building.

Therefore the correct answer should be "A" (not "D").

Oyster Creek recommendation: Accept "A" as the correct answer.

References: RAP J-7-e, FLOW MISMATCH (sent previously)
OCNGS UFSAR, Section 10.2.1, Turbine Generator, page 10.2-1 (sent previously)
625.4.002 Main Turbine Surveillances

Group Heading	
MAIN STEAM	J - 7 - a

FLOW MISMATCH

CAUSES:	SETPOINTS:	ACTUATING DEVICES:
Greater than 7% difference in the total main steam flow and the sum of steam flow through the turbine 1st stage and extraction steam flow to the 2nd stage reheater.	7% with 10 second time delay	DRFCS Software DO-5505 Tag: STM_LEAK_ALM Hardware DIO-2 DO#8
		Reference Drawings: GU 3E-625-41-001, Sht. 3 GU 3E-611-17-011

CONFIRMATORY ACTIONS:

1. Check turbine bypass valve status.
2. Check Condenser Bay and Trunnion Room radiation level and temperatures for indications of a possible steam line break.

AUTOMATIC ACTIONS:

None

MANUAL CORRECTIVE ACTIONS:

If the Plant is operated with Bypass valves open and the Main Turbine is on-line, then inappropriate bypassing of the Turbine Anticipatory Scrams may occur.

IF a steam line break is confirmed,

THEN scram the reactor in accordance with 2000-ABN-3200.01, Reactor Scram.

This alarm indicates that a parameter has exceeded or has the potential to exceed an Emergency Action Level (EAL). Enter Procedure EPIP-OC-.01, Classification of Emergency Conditions. EAL - RCS Integrity.

10.2 TURBINE GENERATOR

10.2.1 Design Bases

The Turbine Generator has been designed to produce electrical power from the steam generated in the reactor, and to discharge exhaust steam into the condenser.

The turbine nameplate rating is 640,700 kW, 1800 rpm, 15 stage, tandem compound, six flow, two stage (513°F) reheat steam turbine with 38 inch last stage buckets, designed for steam conditions of 950 psig saturated with 0.28 percent moisture, 1 inch mercury absolute exhaust pressure and 0 percent makeup while extracting for three stages of feedwater heating. The six flow design and speed of 1800 rpm were dictated by the pressure and temperature of the steam available from the reactor.

The generator is a direct driven, 60 cycle, 24,000 volt, 1800 rpm conductor cooled, synchronous generator rated at 687,500 kVA at 0.8 power factor, 45 psi hydrogen pressure and 0.58 Short Circuit Ratio (SCR). The turbine includes one double flow (high pressure) and three double flow (low pressure) elements. Exhaust steam from the high pressure element passes through moisture separators and reheaters before entering the three low pressure units. The separators are designed to reduce the moisture content of the steam to less than 1 percent by weight.

The turbine controls include speed governor, overspeed governor, steam control valves, main stop and bypass valves, combined intercept and reheat stop valves, and two initial pressure regulators: one electro hydraulic and the other mechanical.

The ability of the plant to follow system load is accomplished by adjusting the reactor power level, either by regulating the reactor recirculation flow or by moving the control rods. The turbine speed governor can override the initial pressure regulation, and close the steam admission valves when an increase in system frequency or a loss of generator load causes the speed of the turbine to increase. In the event that the reactor is delivering more steam than the admission valves will pass, the excess steam is bypassed directly to the Main Condenser by automatic pressure controlled bypass valves. Other standard protective devices are included.

Control and bypass valves are provided to maintain constant reactor pressure. The Turbine Bypass System (TBS), with a rated capacity of 40 percent of the turbine rated steam flow is used during startup to control reactor pressure until the turbine can use all of the reactor steam. The system also limits transient pressure changes and resultant reactor flux

AmerGen An Exelon Company	OYSTER CREEK GENERATING STATION PROCEDURE	Number 625.4.002
Title Main Turbine Surveillances	Usage Level 1	Revision No, 51

Prior Revision 50 incorporated the following Temporary Changes:

N/A

This Revision 51 incorporates the following Temporary Changes:

N/A

List of Pages

1.0 to 43.0
E1-1

PROCEDURE HISTORY

REV	DATE	ORIGINATOR	DESCRIPTION OF CHANGE
33	01/00	J.E. Barton II	To direct operators to 315.1 due to added guidance.
34	01/01	E. deMonch	Corrects light color in procedure to what exists on 7F
35	02/01	G. Hutton	Change Thrust Bearing Wear Detector Trip Light on 7F from red to amber.
36	03/01	H. P. Sharma	Added requirement to change 13R-F25 fuse, every surveillance of Intercept Valves and Reheat Stop Valves test.
37	05/01	T. Corcoran	CAP O2001-0548-1.
38	06/01	T. Corcoran	CAP Action Item O2000-0734-3
39	08/01	D. Egan	Changes Turbine SV and CRV Full Stroke Testing Frequency from Monthly to Quarterly.
40	09/01	D. Pietruski	Add valve numbers to steps when testing oil pumps; corrects ref. to Turbine Normal Operations to 315.5.
41	01/02	E. DeMonch	Provide direction to set the Speed Load Changer to the high speed stop with wear in the Speed Governor assembly.
42	02/02	T. Corcoran D. Egan	Incorporate operator comments/lessons learned Corrects sequence for pressing the high speed stop bypass; changes data table for Speed Governor test to record CU% and speed load changer position from Selsyn; increases test frequency.
43	02/02	T. Wronka	To add a caution statement and clarify Speed Governor Operability Test actions for restoring reactor pressure control to Main Turbine Control Valves.
44	03/02	J. Boyle	Remove day of the week specification from Attachment 1.
45	08/02	J. Ruark	Restore Speed Governor Operability Check to a quarterly status.
46	10/02	B. Guzejko	Editorial Revision / Correction.
47	11/02	T. Lonsdale	Changes to Section 18.0.
48	02/03	D. Egan	Changes to Section 8, 15, 18 and E1-1.
49	10/03	C. Suchting	Minor editorial

PROCEDURE HISTORY
(continued)

REV	DATE	ORIGINATOR	DESCRIPTION OF CHANGE
50	01/04	T. Lonsdale	Enhance instruction for monthly & quarterly TVTs in Attachment 625.4.002-1 for clarification purposes.
51	04/04	B. Guzejko	Change TBWD testing to monthly vs weekly.

1.0 PURPOSE

To provide detailed instructions on how to exercise/test main turbine valves and selected components during operation to assure reliable operation.

Section	Test
4.0	Main Stop Valve Cycling Test
5.0	Intercept Valves Transmitters/Receivers Test
6.0	Reheat Stop/Intercept Valve Full Closure Test
7.0	Main Lube Oil Tank Level Alarm Test
8.0	Turbine Shaft Voltage Test
9.0	Extraction Check Valve Test
10.0	Bypass Valve Operability Test
11.0	Thrust Bearing Wear Detector Test
12.0	Mechanical Pressure Regulator Test
13.0	Turning Gear Oil Pump Test
14.0	Emergency D.C. Oil Pump Test
15.0	Emergency D.C. Seal Oil Pump Test
16.0	Auxiliary Oil Pump Test
17.0	Oil Trip Test
18.0	Speed Governor Operability Test
19.0	Master Trip Operability Test
20.0	Lift Pump Operability Test

2.0 REFERENCES

2.1 Procedures

- 301, Nuclear Steam Supply System
- 309.1, Turbine Building Closed Cooling Water System
- 315.5, Turbine Normal Operation
- 315.2, Turbine Lube Oil System
- 316, Condensate System
- 317, Feedwater System
- 318, Main Steam System and Reheat Steam
- 334, Instrument, Service and Bleeder Check Air System
- 336.2, Hydrogen Shaft Seal Oil System
- 338, 460 Volt Electrical System
- 340.1, 125 VDC Distributions Systems A & B
- 408.12, Operation of Reactor Protection System Panel 1-1
- 408.13, Operation of Reactor Protection System Panel 1-2
- LS-OC-125, Corrective Action Process (CAP)

2.2 Drawing

- BR 2002, Flow Diagram Main Extraction and Auxiliary SteamSystem, Turbine and Reactor Building
- BR 3022, Elementary Diagram Turbine Generator Control
- BR 3023, Elementary Diagram Turbine Generator Control
- GE 233R309, Turbine Control Diagram

2.3 Vender Manual GEK-5522, Volume 1 Turbine Section

2.4 Other References

- GE SIL 413

3.0 PREREQUISITES

3.1 Turbine is "on the line" producing power.

3.2 Test should be performed during off peak hours.

3.3 OS permission shall be obtained prior to commencing any of the tests described in this procedure.

4.0 MAIN STOP VALVE (SV) CYCLING TEST

4.1 Purpose

4.1.1 The purpose of this test is to demonstrate ability of each stop valve to close individually.

4.2 Prerequisites

4.2.1 Reactor power is less than or equal to 1915 MWt with second stage reheaters in service or less than or equal to 1870 MWt with second stage reheaters out of service.

4.2.2 Reactor pressure is being maintained by the EPR or MPR at approximately 1020 psig.

4.3 Precautions and Limitations

4.3.1 Test each main stop valve individually.

4.3.2 Ensure the effect on the system is over prior to testing each main stop valve.

4.4 Equipment

4.4.1 A stop watch for timing the opening and closing strokes of the main stop valves.

4.5 Instructions

4.5.1 Ensure all Prerequisites are complete prior to start of test. If any of the following steps aren't met note on Attachment 625.4.002-1.

4.5.2 Time the opening and closing of the main stop valves, commencing from the time that the main stop valve test pushbutton is pressed until either the OPEN indication light is off (if timing for closing of the stop valve) or the CLOSED indication light is off (if timing for opening of the stop valve). Record the opening and closing times on Attachment 625.4.002-1.

4.5.3 On Panel 14R, turn the main stop valve test select switch from position "OFF" to position 4.

4.5.4 Observe that the selected main stop valve OPEN indication light is lit on panel 7F.

4.5.5 Observe that the selsyn position of the selected main stop valve on Panel 14R indicates OPEN.

4.5.6 On Panel 14R, close the selected main stop valve by pressing the stop valve test pushbutton until the following indications are received:

4.5.6.1 The selected main stop valve CLOSED indication light is lit on Panel 7F.

4.5.6.2 The selected main stop valve OPEN indication light is off on Panel 7F.

4.5.6.3 Observe that the selsyn position of the selected main stop valve indicates CLOSED.

4.5.7 Reopen the selected main stop valve by turning MSV Test Select Switch from its present position to the next sequentially lower position (4-3-2-1). Observe the following indications:

4.5.7.1 The selected main stop valve OPEN indication light is lit on Panel 7F.

4.5.7.2 The selected main stop valve CLOSED indication light is off on Panel 7F.

4.5.7.3 The selsyn position of the selected main stop valve indicates OPEN.

4.5.8 Repeat Steps 4.5.4 through 4.5.7 for the remaining 3 stop valves.

4.5.9 On Panel 14R, turn the main stop valve test select switch from position 1 to OFF.

4.6 Acceptance Criteria

4.6.1 If any of the following criteria are not met or if any other deviation from proper operation is noted, follow the requirements of Procedure LS-OC-125 and note on Attachment 625.4.002-1.

4.6.2 All main stop valves operate as specified in the instructions.

4.6.3 All indicating lights operate as specified in the instructions.

4.6.4 Valve stroke times are within 10-40 seconds in either direction.

5.0 INTERCEPT VALVE TRANSMITTER/RECEIVER TEST

5.1 Purpose

5.1.1 To demonstrate operability of the IV transmitters, receivers and valves.

5.2 Prerequisites

5.2.1 A replacement fuse for fuse 13R-F25 (Panel 14R) is available (30 Amp Fuse TR-30R; Stock # 204-02967

5.3 Precautions and Limitations

5.3.1 Test each intercept valve transmitter (Left or Right), one at a time.

5.3.2 Ensure the effect on the system has stabilized prior to testing each set intercept valves.

5.4 Equipment

5.4.1 Fuse Puller

5.4.2 Electrical gloves

5.4.3 30 Amp Fuse TR-30R (SSN 000-441-4378-0)

5.5 Instructions

5.5.1 Verify all prerequisites are complete prior to start of test. If any of the following steps are not met note on Attachment 625.4.002-1.

5.5.2 IF during the performance of this test, Fuse 13R-F25 (Panel 14R) fails,

THEN replace the fuse and restart the test at step 5.5.3.

> CAUTION
>
> Always pause for 10 seconds in the off position, when changing intercept test motor switch positions, since the control circuit fuse could fail if the control switch is quickly changed.

5.5.3 At Panel 14R move left intercept valve transmitter by turning the Intercept Valve test motor (L) control switch from position OFF to position LOWER, until double light indication is received from intercept valves (1,2 and 3) at Panel 7F.

5.5.4 At Panel 14R, place the intercept test motor (L) control switch to the OFF position and then wait approximately 10 seconds. At Panel 14R, place the intercept test motor (L) control switch from position OFF to position RAISE until the OPEN light indication is received for intercept valves 1,2 and 3 at Panel 7F, and continue holding the switch in that position for about 10 seconds to ensure IV on backseat.

5.5.5 At Panel 14R, place the intercept test motor (L) control switch to the OFF position.

5.5.6 At Panel 14R move right intercept valve transmitter by turning the Intercept Valve test motor (R) control switch from position OFF to position LOWER, until double light indication is received from intercept valves (4, 5 and 6) at Panel 7F.

5.5.7 At Panel 14R, place the intercept test motor (R) control switch to the OFF position and then wait approximately 10 seconds. At Panel 14R, place the intercept test motor (R) control switch from position OFF to position RAISE until the OPEN light indication is received for intercept valves 4, 5 and 6 at Panel 7F, and continue holding the switch in that position for about 10 seconds to ensure IV on backseat.

5.5.8 At Panel 14R, place the intercept test motor (R) control switch to the OFF position.

5.5.9 Replace Fuse 13R-F25 and note on Attachment 625.4.002-1.

5.6 Acceptance Criteria

5.6.1 If any of the following criteria are not met or if any other deviation from proper operation is noted, follow the requirements of Procedure LS-OC-125 and document on Attachment 625.4.002-1.

- All valves operate as specified in the instructions.
- All indicating lights operate as specified in the instructions.
- Ensure immediate action is taken to correct deficiencies, since overspeed protection for the turbine could be impaired.

6.0 REHEAT STOP/INTERCEPT VALVE FULL CLOSURE TEST

6.1 Purpose

6.1.1 To demonstrate operability of each combined reheat valve.

6.2 Prerequisites

6.2.1 A replacement fuse for Fuse 13R-F25 (Panel 14R) is available (30 Amp Fuse TR-30R; SSN 000-411-4378-1).

6.3 Precautions and Limitations

6.3.1 Test each valve individually.

6.3.2 Ensure the effect on the system has stabilized by observing 1-3 and 1-6 Drain Tank levels return to pretest values prior to testing each CRV. It may take up to fifteen minutes for the tank levels to stabilize.

6.4 Equipment

6.4.1 Stop watch for timing open and close strokes for the IVs and RSVs.

6.5 Instructions

6.5.1 Verify all prerequisites are complete prior to start of test. If any of the following Steps aren't met, note on Attachment 625.4.002-1.

6.5.2 On Panel 14R, place the CRV test select switch from position OFF to position 6.

6.5.3 Observe that the selected Intercept Valve OPEN indication light is lit on Panel 7F.

6.5.4 Observe that the selected Reheat Stop Valve OPEN indication light is lit on Panel 7F.

6.5.5 Observe that the selsyn positions of the selected Reheat Stop and Intercept Valves on Panel 14R indicates OPEN.

NOTE

Timing of the IV and RSV are done individually. For closing, the time for the IV is taken from the time the button is pushed until the IV open light extinguishes. The RSV is from the time the IV open light extinguishes until the time the RSV open light extinguishes. For opening, the time for the RSV is taken from the time the button is released until the RSV closed light extinguishes. The IV is from the time the RSV closed light extinguishes until the time that the IV closed light extinguishes.

6.5.6 At Panel 14R, close the selected RSV and IV by the following method and time the closing strokes of IV and RSV individually. Press and hold the CRV test pushbutton until the following indications are received:

6.5.6.1 Observe that the selected Intercept Valve CLOSED indication light is lit on Panel 7F.

6.5.6.2 Observe that the selected RSV CLOSED indication light is lit on Panel 7F.

6.5.6.3 Observe that the selsyn positions of the RSV and IV on Panel 14R indicates CLOSED.

6.5.7 At Panel 14R, open the selected CRV by releasing the CRV test pushbutton and timing the opening strokes of the RSV and IV individually. The following indications will occur:

6.5.7.1 Observe that the selected RSV OPEN indication light is lit on Panel 7F.

6.5.7.2 Observe that the selected IV OPEN indication light is lit on Panel 7F.

6.5.7.3 Observe the selsyn positions of the selected RSV and IV on Panel 14R indicates OPEN.

6.5.7.4 Ensure Drain Tank levels have stabilized at pretest levels.

6.5.8 Test CRV no. 5 by placing the CRV test select switch from position 6 to position 5, and repeat Steps 6.5.3 through 6.5.7.

6.5.9 Test CRV no. 4 by placing the CRV test select switch from position 5 to position 4, and repeat Steps 6.5.3 through 6.5.7.

6.5.10 Test CRV no. 3 by placing the CRV test select switch from position 4 to position 3, and repeat Steps 6.5.3 through 6.5.7.

6.5.11 Test CRV no. 2 by placing the CRV test select switch from position 3 to position 2, and repeat Steps 6.5.3 through 6.5.7.

6.5.12 Test CRV no. 1 by placing the CRV test select switch from position 2 to position 1, and repeat Steps 6.5.3 through 6.5.7.

6.5.13 On Panel 14R, turn the CRV test select switch from position 1 to OFF.

6.6 Acceptance Criteria

6.6.1 If any of the following criteria are not met or if any other deviation from proper operation is noted, follow the requirements of Procedure LS-OC-125 and note on Attachment 625.4.002-1.

- All valves operate as specified in the instructions.
- All indicating lights operate as specified in the instructions.
- Valve test stroke times for each Intercept Valve are within:

  close: 6 to 14 seconds

  open: 25 to 40 seconds
- Valve test stroke times for each Reheat Stop Valve are within:

  close: 10 to 20 seconds

  open: 6 to 14 seconds

7.0 MAIN LUBE OIL TANK LEVEL ALARM TEST

7.1 Purpose

7.1.1 The purpose of this test is to verify that the high/low lube oil tank level alarms are functional.

7.2 Prerequisites

7.2.1 The lube oil system is filled in accordance with Section 2.0 of Procedure 315.2, Turbine Lube Oil System.

7.2.2 All alarms for the main lube oil system are cleared.

7.2.3 The Turbine Building closed cooling water system is in service in accordance with Procedure 309.1.

7.3 PRECAUTIONS AND LIMITATIONS

7.3.1 To prevent possible explosions, keep all flames away from the oil tank openings when the oil is hot and vaporous.

7.4 Equipment

7.4.1 Special hook device for manipulating the float mechanism.

7.4.2 Walkie talkie to communicate with the Control Room.

7.5 Instructions

7.5.1 Ensure all Prerequisites are complete prior to start of test. If any of the following steps aren't met, note on Attachment 625.4.002-1.

7.5.2 Note the local oil level gauge indication. Establish radio communications with the Control Room.

> CAUTION
>
> Prior to opening the manway cover, remove all items from clothing that may fall into lube oil tank (Pens, pencils, safety glasses, hard hat, etc.).

7.5.3 Open the manway cover on the main lube oil tank north of the tank oil level gauge.

CAUTION

Improper or forceful manipulation of the float arm will damage the arm and/or affect the settings of the oil level gauge and alarms. USE EXTREME CARE.

NOTE

The Special Hook device should device should be tied off using a lanyard to prevent it from falling in the tank.

7.5.4 Use the special hook device near the float and slowly pull the float mechanism upward just until the OIL TANK LEVEL HI alarm, window M-7-d, is received in the Control Room.

7.5.5 Use the special hook device and slowly press downward on the float mechanism just until the OIL TANK LEVEL LO alarm, window M-8-d, is received in the Control Room.

7.5.6 Remove the special hook device and allow the float to normalize itself.

7.5.7 Close the manway cover.

7.6 Acceptance Criteria

7.6.1 If any of the acceptance criteria are not met or if any other deviation from proper operation is noted, follow the requirements of Procedure LS-OC-125, and note on Attachment 625.4.002-1.

7.6.2 The OIL TANK LEVEL HI alarm operates close to the HI mark on the gauge, and as specified in the instructions.

7.6.3 The OIL TANK LEVEL LO alarm operates close to the LO mark on the gauge, and as specified in the instructions.

7.6.4 Oil level as indicated on the local gauge should return to the approximate reading as noted in Step 7.5.2.

8.0 TURBINE SHAFT VOLTAGE TEST

8.1 Purpose

8.1.1 The purpose of this test is to ensure effectiveness of the copper braid shaft grounding device to keep shaft voltage from building up by ensuring that the shaft voltage is within specified tolerances.

8.2 Prerequisites

None

8.3 Precautions and Limitations

None

8.4 Equipment

None

8.5 Instructions

8.5.1 Ensure all Prerequisites contained in Section 3.0 are complete prior to start of test. If any of the following steps are not met, note on Attachment 625.4.002-1.

8.5.2 On Panel 14R, push the shaft voltage test pushbutton.

8.5.3 Record the shaft voltage (millivolts) on Attachment 625.4.002-1.

8.5.4 Notify electricians if shaft voltage is greater than 1.0 volt.

8.6 Acceptance Criteria

8.6.1 If any of the acceptance criteria are not met or if any other deviation from proper operation is noted, follow the requirements of Procedure LS-OC-125 and note on Attachment 625.4.002-1.

8.6.2 Indication operates as specified in the instruction (< 1.0 volt).

9.0 EXTRACTION CHECK VALVE TEST

9.1 Purpose

9.1.1 The purpose of this test is to verify operability of the HP and IP extraction check valves.

9.2 Prerequisites

9.2.1 The reactor feedwater system is in operation in accordance with Operating Procedure 317.

9.2.2 The main condensate system is in operation in accordance with Operating Procedure 316.

9.2.3 The main steam system is in operation in accordance with Operating Procedure 318.

9.2.4 The instrument, service, breathing and bleeder check air system is in operation in accordance with Operating Procedure 334.

9.2.5 The turbine is in operation in accordance with Operating Procedure 315.5.

9.3 Precautions and Limitations

None

9.4 Equipment

9.4.1 A walkie talkie for communications with the Control Room.

9.5 Instructions

9.5.1 Ensure all Prerequisites are complete prior to start of test. If any of the following steps aren't met, note on Attachment 625.4.002-1.

NOTE

During the performance of this test, the red OPEN indicating light will extinguish and the green close indicating light will remain off.

9.5.2 Establish communications between the Control Room and the Feed Pump Room. Close V-1-87, inlet check valve to IP heater 1A2, by pulling downward on air control valve V-6-87 lever until the red OPEN indicating light extinguishes on the local control panel in the Feed Pump Room. Verify by radio or phone communication that the IP A2 REV CK VLV TRIP alarm, window N-4-d, is received in the Control Room.

9.5.3 Release the lever. Push upward on air control valve V-6-87 lever to ensure that the valve actuator opens all the way and the red OPEN indicating light illuminates.

9.5.4 Observe that the IP A2 REV CK VLV TRIP alarm, window N-4-d, is cleared in the Control Room.

9.5.5 Close V-1-88, inlet check valve to HP heater 1A3, by pulling downward on air control valve V-6-88 lever until the red OPEN indicating light extinguishes on the local control panel in the Feed Pump Room. Verify by radio or phone communication that the HP A3 REV CK VLV TRIP alarm, window N-1-d, is received in the Control Room.

9.5.6 Release the lever. Push upward on air control valve V-6-88 lever to ensure that the valve actuator opens all the way and the red OPEN indicating light illuminates.

9.5.7 Observe that the HP A3 REV CK VLV TRIP alarm, window N-1-d, is cleared in the Control Room.

9.5.8 To test V-1-89, inlet check valve to IP heater 1B2, pull down on air control valve V-6-89 lever until the red OPEN indicating light extinguishes on the local control panel in the Feed Pump Room. Verify by radio or phone communication that the IP B2 REV VLV TRIP alarm, window N-4-e, is received in the Control Room.

9.5.9 Release the lever. Push upward on air control valve V-6-89 lever to ensure that the valve actuator opens all the way and the red OPEN indicating light illuminates.

9.5.10 Observe that the IP B2 REV CK VLV TRIP alarm, window N-4-e, is cleared in the Control Room.

9.5.11 To test V-1-90, inlet check valve to HP heater 1B3, pull down on air control valve V-6-90 lever until the red OPEN indicating light extinguishes on the local control panel in the Feed Pump Room. Verify by radio or phone communication that the HP B3 REV CK VLV TRIP alarm, window N-1-e, is received in the Control Room.

9.5.12 Release the lever. Push upward on air control valve V-6-90 lever to ensure that the valve actuator opens all the way and the red OPEN indicating light illuminates.

9.5.13 Observe that the HP B3 REV CK VLV TRIP alarm, window N-1-e, is cleared in the Control Room.

9.5.14 To test V-1-91, inlet check valve to IP heater 1C2, pull down on air control valve V-6-91 lever until the red OPEN indicating light extinguishes on the local control panel in the Feed Pump Room. Verify by radio or phone communication that the IP C2 REV CK VLV TRIP alarm, window N-4-f, is received in the Control Room.

9.5.15 Release the lever. Push upward on air control valve V-6-91 lever to ensure that the valve actuator opens all the way and the red OPEN indicating light illuminates.

9.5.16 Observe that the IP C2 REV CK VLV TRIP alarm, window N-4-f, is cleared in the Control Room.

9.5.17 To test V-1-92, inlet check valve to HP heater 1C3, pull down on air control valve V-6-92 lever until the red OPEN indicating light extinguishes on the local control panel in the Feed Pump Room. Verify by radio or phone communication that the HP C3 REV CK VLV TRIP alarm, window N-1-f, is received in the Control Room.

9.5.18 Release the lever. Push upward on air control valve V-6-92 lever to ensure that the valve actuator opens all the way and the red OPEN indicating light illuminates.

9.5.19 Observe that the HP C3 REV CK VLV TRIP alarm, window N-1-f, is cleared in the Control Room.

9.6 Acceptance Criteria

9.6.1 Acceptance criteria for all IP and HP heater inlet check valves is as following:

9.6.1.1 If any of the acceptance criteria are not met or if any other deviation from proper operation is noted, follow the requirements of Procedure LS-OC-125, and note on Attachment 625.4.002-1.

9.6.1.2 All valves operate as specified in the instructions.

9.6.1.3 All indicating lights operate as specified in the instructions.

9.6.1.4 All alarms operate as specified in the instructions.

10.0 BYPASS VALVE OPERABILITY TEST

10.1 Purpose

10.1.1 The purpose of this test is to exercise the bypass valves to ensure the valves will be operable.

10.2 Prerequisites

10.2.1 Reactor protection system in service in accordance with Procedure 408.12 and 408.13.

10.2.2 NSSS in service in accordance with Procedure 301.

10.2.3 Main condenser in operation.

10.3 Precautions and Limitations

10.3.1 Monitor the reactor power, steam flow and reactor vessel level during Bypass Valve testing.

10.3.2 Reactor water level shall be limited to 180" above TAF in order to avert water hammer if initiation of isolation condensers should occur.

10.3.3 A load reduction of approximately 25 MWe will occur when each bypass valve is tested.

10.4 Equipment

11.4.1 None

10.5 Instructions

10.5.1 Ensure all Prerequisites are complete prior to start of test. If any of the following steps aren't met, note on Attachment 625.4.002-1.

> CAUTION
>
> Do not perform this test if the bypass valves are responding to a transient or are not initially closed as this could cause undesirable effects on reactor pressure.

> NOTE
>
> Bypass Valves position recorder on 14R does not provide position indication when the test pushbutton is depressed (13R). No recorder response should be anticipated.

10.5.2 On Panel 13R, place bypass valves test select switch from position OFF to position 9.

10.5.3 Observe that the selected bypass valve CLOSED indication light is lit on Panel 13R and Panel 7F.

10.5.4 On Panel 13R, depress the bypass valve test pushbutton.

10.5.4.1 Observe the selected bypass valve OPEN position indication 13R and 7F. Lights lit and CLOSED lights out.

10.5.5 Release the bypass valve test pushbutton.

10.5.5.1 Observe the selected bypass valve CLOSED position indication light is lit and the OPEN indication is off.

10.5.6 On Panel 13R, place bypass valve test select switch from position 9 to position 8, and repeat Steps 10.5.3 through 10.5.5.

10.5.7 On Panel 13R, place bypass valve test select switch from position 8 to position 7, and repeat Steps 10.5.3 through 10.5.5.

10.5.8 On Panel 13R, place bypass valve test select switch from position 7 to position 6, and repeat Steps 10.5.3 through 10.5.5.

10.5.9 On Panel 13R, place bypass valve test select switch from position 6 to position 5, and repeat Steps 10.5.3 through 10.5.5.

10.5.10 On Panel 13R, place bypass valve test select switch from position 5 to position 4, and repeat Steps 10.5.3 through 10.5.5.

10.5.11 On Panel 13R, place bypass valve test select switch from position 4 to position 3, and repeat Steps 10.5.3 through 10.5.5.

10.5.12 On Panel 13R, place bypass valve test select switch from position 3 to position 2, and repeat Steps 10.5.3 through 10.5.5.

10.5.13 On Panel 13R, place bypass valve test select switch from position 2 to position 1, and repeat Steps 10.5.3 through 10.5.5.

10.5.14 On Panel 13R, place bypass valve test select switch from position 1 to OFF.

10.6 Acceptance Criteria

10.6.1 If any of the following criteria are not met or if any other deviation from proper operation is noted, follow the requirements of Procedure LS-OC-125, and note on Attachment 625.4.002-1.

10.6.2 All bypass valves operate as specified in the instructions.

10.6.3 All indication lights operate as specified in the instructions.

11.0 THRUST BEARING WEAR DETECTOR TEST

11.1 Purpose

The purpose of this test is to demonstrate operability of the Thrust Wear Detector (TWD).

11.2 Prerequisites

11.2.1 Turbine is "on the line" producing power.

11.2.2 Test should be performed during off peak hours.

11.2.3 OS permission shall be obtained prior to commencing this test.

11.3 Precautions and Limitations

11.3.1 During the test, the device is temporarily locked out of service and will not protect the unit if failure bearing wear occurs. Therefore, the device should be tested only during steady-state operations, particularly not when feedwater heater valving is being operated or when any turbine valves are tested.

11.4 Equipment

None

11.5 Instructions

11.5.1 Ensure all Prerequisites are complete prior to start of test. Both the Remote and local test constitute complete tests, only perform one type of test unless directed otherwise. If any of the following steps are not met, note on Attachment 625.4.002-1.

> CAUTION
>
> A turbine trip may occur if the amber LOCK OUT light is not continuously lit while the THRUST BRG WEAR HI alarm or amber TRIP light are illuminated.

11.5.2 For remote testing perform the following steps (preferred method of testing):

11.5.2.1 At Panel 7F depress and hold the Thrust Wear Detector (TWD) DETECTOR UNLATCH button. This will actuate the lockout release.

11.5.2.2 Verify the amber LOCK OUT light is lit from Panel 7F.

11.5.2.3

> CAUTON
>
> To ensure ample margin from the turbine trip setpoint, the amber LOCK OUT light must be lit when the selsyn position indicator indicates more than ±3 mils.

IF the amber LOCK OUT light is not lit,

THEN At Panel 7F, place the THRUST BEARING WEAR DETECTOR TEST switch to either the "- reading" or "+ reading" position until the LOCK OUT light is lit, BUT NOT to exceed 3 mils on the indicator in either direction.

11.5.2.4 At Panel 7F, place and hold the THRUST BEARING WEAR DETECTOR TEST switch to the "+ reading" position and verify the pointer moves in the "+" direction, and the right side red indicating light illuminates. When the amber trip light comes on, return the test switch to the OFF position.

11.5.2.5 Observe that the THRUST BRG WEAR HI alarm Q-2-b has annunciated. Record the reading.

11.5.2.6 At Panel 7F, place and hold the THRUST BEARING WEAR DETECTOR TEST switch to the "- reading" position and verify the pointer moves in the "-" direction, and the right side indicating red light extinguishes, left side red indicating light illuminates.

11.5.2.7 Observe that alarm Q-2-b clears no closer to zero than +20 mils (should clear within 3 mils of the trip reading).

11.5.2.8 Continue to depress the DETECTOR UNLATCH BUTTON.

11.5.2.9 Verify that the amber LOCK OUT light is still lit.

11.5.2.10 At Panel 7F, continue holding the THRUST BEARING WEAR DETECTOR TEST switch to "- reading" position, verify the indicator passes through zero and continues in the "-" direction.

11.5.2.11 At Panel 7F, when the amber trip light comes on, return the test switch to the OFF position.

11.5.2.12 Observe that the THRUST BRG WEAR HI alarm Q-2-b has annunciated. Record the reading.

11.5.2.13 At Panel 7F, place and hold the THRUST BEARING WEAR DETECTOR TEST switch to the "+" reading position and verify the pointer moves toward zero.

11.5.2.14 Observe that alarm Q-2-b clears no closer to zero than 20 mils (should clear within 3 mils of the trip reading).

11.5.2.15 At Panel 7F, when the detector position reaches zero, place the THRUST BEARING WEAR DETECTOR TEST switch to OFF.

11.5.2.16 Confirm that the amber trip light is out AND that the THRUST BEARING WEAR HI alarm Q-2-b is clear.

11.5.2.17 Release the THRUST BRG WEAR DET TEST UNLATCH button. Observe that the amber LOCK OUT light goes out.

11.5.2.18 Record generator load from Panel 9F.

11.5.3 For local testing of the Thrust Bearing Wear Detector perform the following (optional method of testing):

11.5.3.1 At the turbine middle standard, depress and hold the thrust bearing detector unlatch button on the north side of the TWD. This will actuate the lockout release.

11.5.3.2 Verify the amber LOCK OUT light is lit from Panel 7F or at the TWD.

11.5.3.3

> CAUTION
>
> To ensure ample margin from the turbine trip setpoint, the amber LOCK OUT light must be lit when the selsyn position indicator indicates more than + 3 mils.

IF the amber LOCK OUT light is not lit,

THEN At the turbine middle standard, rotate the test handle (located on top of TWD) in the clockwise or counterclockwise direction, BUT NOT to exceed 3 mils on the indicator in either direction.

11.5.3.4 At the middle standard, rotate the test handwheel in the counterclockwise direction and verify the dial moves. Rotate the handwheel smoothly until the local red trip light comes on.

11.5.3.5 Observe the THRUST BEARING WEAR HI alarm Q-2-b has annunciated. Record the reading.

11.5.3.6 At the middle standard, rotate the test handwheel in the clockwise direction and verify the dial moves.

11.5.3.7 Observe the alarm Q-2-b clears no closer to zero than 20 mils (should clear within 3 mils of trip reading)

11.5.3.8 Continue to depress the DETECTOR UNLATCH BUTTON.

11.5.3.9 Verify the amber LOCK OUT light is still lit.

11.5.3.10 At the middle standard, continue rotating the test handwheel in the clockwise direction, verify the dial passes through zero and continues to move.

11.5.3.11 At the middle standard, rotate the handwheel smoothly until the local red trip light comes on.

11.5.3.12 Observe the THRUST BEARING WEAR Hi alarm Q-2-b has annunciated. Record the reading.

11.5.3.13 At the middle standard, rotate the test handwheel in the counterclockwise direction and verify the dial moves toward zero.

11.5.3.14 Observe the alarm Q-2-b clears no closer to zero than 20 mils (should clear within 3 mils of trip reading)

11.5.3.15 At the middle standard, rotate the test handwheel until the indicator reaches zero.

11.5.3.16 Confirm the local red trip light is out AND the THRUST BEARING WEAR Hi alarm Q-2-b is clear.

11.5.3.17 Release (pull) the THRUST BEARING WEAR DETECTOR TEST UNLATCH button. Observe the amber LOCK OUT light goes out.

11.5.3.18 Record generator load from Panel 9F.

11.6 Acceptance Criteria

11.6.1 The sum of the absolute values of the plus (+) and minus (-) trip point readings total between 75 and 82 mils, if not repeat the test. After (3) three unsuccessful attempts to perform a valid TWD test remotely. Perform TWD Test locally, If after (3) three unsuccessful attempts to perform a valid TWD Test locally. Submit a DR IAW Procedure LS-OC-125.

11.6.2 If any of the following criteria are not met or if any other deviation from proper operation is noted, follow the requirements of Procedure LS-OC-125, and note on Attachment 625.4.002-1.

11.6.3 The plus (+) and minus (-) trip reset points are $\geq$ +20 mils and $\leq$ -20 mils respectively.

11.6.4 The THRUST BRG WEAR HI alarm Q-2-b operates as specified in the instructions.

12.0 MECHANICAL PRESSURE REGULATOR TEST

12.1 Purpose

12.1.1 The purpose of this test is to ensure the mechanical pressure regulator is operable.

12.2 Prerequisites

12.2.1 Turbine is "on the line" producing power.

12.2.2 Test should be performed during off peak hours.

12.2.3 OS permission shall be obtained prior to commencing this test.

12.3 Precautions and Limitations

12.3.1 Ensure the standby regulator is set at a slightly higher pressure to act as a backup in event of a failure of the controlling regulator.

12.4 Equipment

None

12.5 Instructions

> CAUTION
>
> Adjusting regulator setpoints too fast or to far may cause reactor steam pressure oscillations.

12.5.1 Ensure all Prerequisites are complete prior to start of test. During the test monitor reactor steam pressure for oscillations. If oscillations occur, remove the oscillating regulator from service.

12.5.2 Check that MPR relay position indicator is approximately 8-10 percent below EPR relay position (1 psi = 2.5 percent) (Panel 7F).

12.5.3 Slowly lower the MPR setpoint (one second shots) until the MPR relay position indicator moves in the direction to reach the EPR setting (Panel 7F).

12.5.4 Continue to lower the MPR setpoint (one second shots) until both the red lights are lit and the EPR relay position indication starts to decrease. Reactor pressure may drop slightly at this point.

12.5.5 The EPR relay position will continue to decrease slowly with the MPR in control. For this test, is should not be necessary to operate EPR control switch at all. If it is desirable to remain on the MPR, use the EPR control switch and set the EPR pressure setpoint at 6 - 7 psig higher than the pressure at which it had been operating.

12.5.6 Following the test, in order to return control to the EPR, start to slowly raise MPR setpoint and EPR relay position indication will start to increase. (If increasing too fast, bump MPR in opposite direction.)

12.5.7 When the EPR relay position reaches the approximate vicinity of the MPR relay position, the EPR red light will come on.

12.5.8 When the EPR relay position stops increasing, the EPR is now in control.

12.5.9 Raise the MPR setpoint so that the MPR relay position is approximately 8 - 10 percent below the EPR setting or as directed by the OS (not to exceed 12.5%).

12.6 Acceptance Criteria

12.6.1 If any of the following criteria are not met or if any other deviation from proper operation is noted, follow the requirements of Procedure LS-OC-125, note on Attachment 625.4.002-1 and refer to Procedure 315.5 for limitations on power with only one pressure regulator in service.

12.6.2 The electrical pressure regulator operates as specified in the instructions.

12.6.3 The mechanical pressure regulator operates as specified in the instructions.

13.0 TURNING GEAR A.C. OIL PUMP TEST

13.1 Purpose

13.1.1 The purpose of this test is to ensure the turning gear A.C. oil pump will start automatically upon receipt of a low lube oil pressure signal.

13.2 Prerequisites

13.2.1 The 460 volt system is in service in accordance with Procedure 338.

13.2.2 The main turbine lube oil system is in operation in accordance with Procedure 315.2.

13.2.3 All alarms on Panel M for the turning gear system are cleared.

13.2.4 OS permission required prior to start of test.

13.3 Precautions and Limitations

13.3.1 None

13.4 Equipment

13.4.1 Walkie talkie for communication with the Control Room.

13.5 Instructions

13.5.1 Ensure all Prerequisites are complete prior to start of test. If any of the following steps aren't met, note on Attachment 625.4.002-1.

13.5.2 Confirm the turning gear A.C. oil pump switch in normal on Panel 7F in the Control Room.

13.5.3 Establish communications with the Control Room at the main lube oil tank.

13.5.4 Close the turning gear oil pump test valve V-8-81 to bleed off oil pressure from the pressure switch (located on top of the main lube oil tank).

13.5.5 Verify that the turning gear oil pump starts (Panel 7F) and the OIL PUMP RUNNING alarm, window M-4-f sounds.

13.5.6 Open the turning gear oil pump test valve V-8-81 to return oil pressure to the pressure switch.

13.5.7 At Panel 7F, place the Turning Gear A.C. Oil Pump Control Switch to STOP. Verify the OIL PUMP RUNNING alarm, window M-4-f clears, then allow the Turning Gear A.C. Oil Pump Control Switch to Spring return to normal

13.6 Acceptance Criteria

13.6.1 If any of the following criteria are not met or if any other deviation from proper operation is noted, follow the requirements of Procedure LS-OC-125, and note on Attachment 625.4.002-1.

13.6.2 The turning gear A.C. oil pump operates as specified in the instructions.

13.6.3 The OIL PUMP RUNNING alarm operates as specified.

14.0 EMERGENCY D.C. OIL PUMP TEST

14.1 Purpose

14.1.1 The purpose of this test is to ensure that the emergency D.C. oil pump will start automatically upon receipt of a low lube oil pressure signal.

14.2 Prerequisites

14.2.1 The lube oil system is operating in accordance with Procedure 315.2.

14.2.2 The turbine building closed cooling water system is in service in accordance with Procedure 309.1.

14.2.3 OS permission required prior to start of test.

14.2.4 All alarms for the emergency D.C. oil pump are cleared.

14.2.5 The 125 VDC system is energized in accordance with Procedure 340.1.

14.3 Precautions and Limitations

14.3.1 During the performance of this test, it is possible that the 125VDC 'A' battery charger contactor will trip open.

14.4 Equipment

14.4.1 A walkie talkie is needed for communication with the Control Room.

14.5 Instructions

14.5.1 Ensure all Prerequisites are complete prior to start of test. If any of the following steps aren't met, note on Attachment 625.4.002-1.

14.5.2 Confirm the emergency D.C. oil pump start switch in Auto on Panel 7F in the Control Room.

14.5.3 Establish communication with the Control Room at the main lube oil tank.

14.5.4 Close the emergency D.C. oil pump test valve V-8-80 to bleed oil pressure from the pressure switch (located on top of the lube oil tank).

14.5.5 Verify that the emergency D.C. oil pump starts (Panel 7F) and the EMERG OIL PMP RUNNING alarm, window M-4-d, sounds.

14.5.7 Open the emergency D.C. oil pump test valve V-8-80 to return oil pressure to the pressure switch.

14.5.8 At Panel 7F, place the emergency D.C. oil pump control switch to OFF. Monitor indicating lights to verify pump stops, then return the control switch to the AUTO position.

14.5.9 Verify the EMERG OIL PMP RUNNING alarm, window M-4-d, clears.

14.6 Acceptance Criteria

14.6.1 If any of the following criteria are not met or if any other deviation from proper operation is noted, follow the requirements of Procedure LS-OC-125, and note on Attachment 625.4.002-1.

14.6.2 The emergency D.C. oil pump operates as specified in the instructions.

14.6.3 The EMERG OIL PMP RUNNING alarm operates as specified in the instructions.

15.0 EMERGENCY SEAL OIL PUMP TEST

15.1 Purpose

15.1.1 The purpose of this test is to ensure that the emergency seal oil pump will start automatically upon receipt of a low seal oil pressure signal.

15.2 Prerequisites

15.2.1 The 125 VDC system is energized in accordance with Procedure 340.1.

15.2.2 The lube oil system is operating in accordance with Procedure 315.2.

15.2.3 The hydrogen shaft seal oil system is operating in accordance with Procedure 336.2.

15.2.4 All alarms associated with the hydrogen shaft seal oil system are cleared.

15.2.5 OS permission required prior to start of test.

15.3 Precautions and Limitations

15.3.1 Ensure the differential pressure regulator maintains 4 +4/-0 (4 to 8) psid.

15.3.2 During the performance of this test it is possible that the 125VDC 'A' (Battery charger) contactor will trip open.

15.4 Equipment

15.4.1 A walkie talkie is needed for communication with the Control Room.

15.5 Instructions

15.5.1 Ensure all Prerequisites are complete prior to start of test. If any of the following steps aren't met, note on Attachment 625.4.002-1.

15.5.2 Confirm the emergency seal oil pump control switch in the AUTO position on Panel 8F/9F.

15.5.3 Establish communications with the Control Room from the hydrogen seal oil tank in the Turbine Building basement.

15.5.4 Ensure the seal oil pump is supplying oil pressure to the seal oil header prior to test.

15.5.5 Open H-34 emergency seal oil pump test valve to bleed oil pressure from the pressure switch (located below the hydrogen seal oil tank).

15.5.6 Verify that the emergency seal oil pump starts (Panel 8F/9F) and the H2 SYSTEM TROUBLE alarm, window R-6-b, is received.

15.5.7 Close H-34 emergency seal oil pump test valve to return oil pressure to the pressure switch.

15.5.8 At Panel 8F/9F, place the Emergency Seal Oil Pump control switch to STOP and then return to the AUTO position.

15.5.9 Verify that the emergency seal oil pump stops (Panel 8F/9F) and the H2 SYSTEM TROUBLE alarm, window R-6-b clears.

15.6 Acceptance Criteria

15.6.1 If any of the following criteria are not met or if any other deviation from proper operation is noted, follow the requirements of Procedure LS-OC-125, and note on Attachment 625.4.002-1.

15.6.2 The emergency seal oil pump operates as specified in the instructions.

15.6.3 The H2 SYSTEM TROUBLE alarm operates as specified in the instructions.

16.0 AUXILIARY OIL PUMP TEST

16.1 Purpose

16.1.1 The purpose of this test is to ensure that the auxiliary oil pumps will start automatically upon receipt of a low oil pressure signal.

16.2 Prerequisites

16.2.1 The turbine lube oil system is operating in accordance with Procedure 315.2.

16.2.2 The Turbine Building closed cooling water system is in service in accordance with Procedure 309.1.

16.2.3 OS permission required prior to start of test.

16.2.4 All alarms for the auxiliary oil pumps are cleared.

16.3 Precautions and Limitations

None

16.4 Equipment

16.4.1 A walkie talkie is needed for communication with the Control Room.

16.5 Instructions

16.5.1 Ensure all Prerequisites are complete prior to start of test. If any of the following steps aren't being met, note on Attachment 625.4.002-1.

16.5.2 Confirm the auxiliary oil pump control switch is in the Standby position.

16.5.3 Establish communications with the Control Room at the main oil tank.

16.5.4 Close the auxiliary oil pump test valve V-8-73 to bleed oil pressure from the pressure switch (located on top of the main oil tank).

16.5.5 Verify that auxiliary oil pumps 1-1 and 1-2 start (Panel 7F) and that the AUX OIL PUMP RUNNING alarm, window M-4-e, is received.

16.5.6 Open the auxiliary oil pump test valve V-8-73 to return oil pressure to the pressure switch.

16.5.7 At Panel 7F, place the auxiliary oil pump control switch to STOP and then return to the STANDBY position.

16.5.8 Verify the AUX OIL PUMP RUNNING alarm, window M-4-e, clears.

16.6 Acceptance Criteria

16.6.1 If any of the following criteria are not met or if any other deviation from proper operation is noted, follow the requirements of Procedure LS-OC-125, and note on Attachment 625.4.002-1.

16.6.2 The auxiliary oil pumps 1-1 and 1-2 start as specified in the instructions.

16.6.3 The AUX OIL PUMP RUNNING alarm operates as specified in the instructions.

17.0 OIL TRIP TEST

17.1 Purpose

17.1.1 Purpose of this test is to verify operability of the emergency governor and emergency trip piston.

17.2 Prerequisites

17.2.1 Turbine is "on the line" producing power.

17.2.2 Test should be performed during off peak hours.

17.2.3 OS permission shall be obtained prior to commencing this test.

17.3 Precautions and Limitations

17.3.1 The oil trip test switch must never be left in the lockout position because this line of overspeed protection will have been eliminated.

17.4 Equipment

17.4.1 None

17.5 Instructions

17.5.1 Ensure all Prerequisites are complete prior to start of test. If any of the following steps aren't met, fill out Form 104 and note on Attachment 625.4.002-1.

17.5.2 Pull out the "Oil Trip Test" control switch on 7F to the "lockout" position and observe that the amber lockout light is energized. The switch must remain pulled out until instructed to be depressed in Step 17.5.7.

17.5.3 Place the "Oil Trip Test" control switch to the trip position. The red trip light will go on to indicate that the emergency trip piston has properly operated.

17.5.4 Return the "Oil Trip Test" control switch to the "lockout" position (center), and wait approximately 10 seconds to allow the emergency governor to port off excess oil.

17.5.5 Place the "Oil Trip Test" control switch to the reset position and observe that the green reset light is "on" and the red trip light is extinguished.

17.5.6 Allow the spring loaded "Oil Trip Test" control switch to return to the "lockout" position, and verify the green light still remains "on" and the red light "off".

17.5.7 Depress the handle to remove the lockout, and verify that the amber "lockout" light is extinguished.

17.6 Acceptance Criteria

17.6.1 If any of the following criteria are not met or if any other deviation from proper operation is noted, follow the requirements of Procedure LS-OC-125 and note on Attachment 625.4.002-1.

17.6.1.1 Indicating lights operated as expected.

17.6.1.2 EMERG GOVERNOR OIL TRIP TEST control switch operated as expected.

17.6.2 IF it is determined by the Turbine System Engineer that the Emergency governor is malfunctioning,

THEN perform the Speed Governor Operability Test, Section 18.0, and the Master Trip Operability Test, Section 19.0.

17.6.2.1 IF the Speed Governor Operability Test and Master Trip Operability Test are completed satisfactorily,

THEN an expeditious resolution of the emergency governor deficiency shall be made without necessarily taking he turbine off-line.

17.6.2.2 IF the Speed Governor Operability Test and Master Trip Operability Test are not completed satisfactorily,

THEN immediately perform a shutdown of the turbine.

18.0 Speed Governor Operability Test

18.1 Purpose

To demonstrate the operability of the Speed Governor.

18.2 Prerequisites

18.2.1 Bypass Valve Operability Test (Section 10.0) has been completed satisfactorily in the current calendar month.

18.2.2 Reactor pressure is being controlled by the EPR.

18.3 Precautions and Limitations

18.3.1 During this test, reactor pressure control will be transferred from the Control Valves to the Bypass Valves. Reactor pressure must be closely monitored during this transfer of control.

18.3.2 At the time of the transfer of reactor pressure control from the Control Valves to the Bypass Valves, or vice versa, a minor perturbation of reactor pressure is expected (similar to the perturbation that may be experienced during the transfer to and from the MPR). This will be minimized by completing the transfer with short duration Speed Load Changer lower/raise signals.

18.3.3 Following is the availability of the Bypass Valves versus Control Valve stroke:

At 100% CV stroke, 1 BPV is available

AT 90% CV stroke, 3.3 BPVs are available

At 80% CV stroke, 5.5 BPVs are available

At 70% CV stroke, 7.8 BPVs are available

At 65% CV stroke, 9 BPVs are available

18.4 Equipment

NONE

18.5 Instructions

18.5.1 Record the control valve position indication from the Plant Computer System in the space provided on Attachment 625.4.002-1.

18.5.2 Switch the REACTOR PRESSURE NARROW RANGE recorder on Panel 5F/6F to FAST speed.

18.5.3 Slowly lower the SPEED LOAD CHANGER (Panel 8F/9F) by taking the control switch to LOWER using short duration down signals.

18.5.4 IF the Speed Load Changer fails to move as indicated by the SPEED LOAD CHANGER POSITION selsyn indicator (Panel 8F/9F)

THEN terminate the test until the discrepancy is resolved.

> CAUTION
>
> Opening Bypass Valves causes feedwater temperature to decrease and adds positive reactivity to the core. Monitor reactor power closely while #1 Bypass Valve is open.

NOTE

The Approximate Speed Load Changer (SLC) Stroke at which the Turbine Load Transfer from the EPR to the SLC is Expected to Occur:

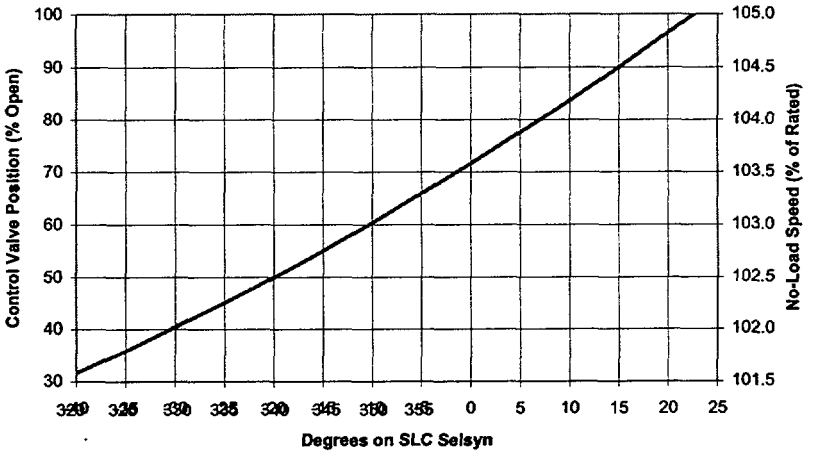

18.5.5 Continue to lower the SPEED LOAD CHANGER (Panel 8F/9F) until it takes control of turbine load. This will be indicated by the following:

1. No. 1 Bypass Valve going partially open as indicated on BYPASS VALVE VALVE No. 1 POSITION selsyn indicator (Panel 7F). Reactor pressure is now controlled by the bypass valves via the EPR.

2. BYPASS VALVE POSITION red indicating lights lit (double indication) (Panels 7F and 13R)

3. CONTROL AND BYPASS VALVE POSITION recorder (Panel 14R) indicated Control Valves closing slightly and Bypass Valves opening slightly.

4. Slight drop in generator load as indicated on GROSS MEGAWATTS digital meter (Panel 8F/9F).

18.5.6 Record SPEED LOAD CHANGER position in degrees to the nearest half-degree on Attachment 625.4.002-1.

18.5.7 IF the load transfer does not occur,

THEN terminate the test and do not manipulate the Speed Load Changer any further (other than for troubleshooting) until the discrepancy is resolved.

18.5.8 Remain on Speed Governor control for a period of 3 to 5 minutes. Verify that load control on the Speed Governor is functioning smoothly and is steady.

18.5.9 Return reactor pressure control to the Control Valves by the following steps:

18.5.9.1 Slowly RAISE the Speed Load Changer by taking the control switch to RAISE using short duration raise signals until the bypass valves are closed and reactor pressure is transferred to the Control Valves. This will be indicated by the following:

1. No valve position or generator load change response to further raising of the Speed Load Changer.

2. Bypass Valves closed as indicated by BYPASS VALVE VALVE No. 1 POSITION selsyn indicator (Panel 7F).

3. All BYPASS VALVE POSITION red indicating lights (Panel 7F and 13R) are out.

4. CONTROL AND BYPASS VALVE POSITION recorder (Panel 14R) indicates Bypass Valves closed and Control Valves slightly more open.

18.5.9.2 Raise the Speed Load Changer to the High Speed Stop.

18.5.10 Switch the REACTOR PRESSURE NARROW RANGE recorder on Panel 5F/6F to NORMAL speed.

18.6 Acceptance Criteria

18.6.1 If any of the following criteria are not met or if any other deviation from proper operation is noted, follow the requirements of Procedure LS-OC-125 and note on Attachment 625.4.002-1.

18.6.1.1 Speed Load Changer operates smoothly in LOWER and RAISE directions.

18.6.1.2 Generator load control was transferred smoothly from the EPR to Speed Governor via the Speed Load Changer.

18.6.1.3 Generator load was held steady by the Speed Load Changer.

18.6.1.4 Generator load control was transferred smoothly from the Speed Governor to the EPR via the Speed Load Changer.

18.6.2 IF it is determined that the Speed Governor is malfunctioning

AND

the backup overspeed trip is not affected as determined by the Turbine System Engineer,

THEN perform the Oil Trip Test, Section 17.0, to verify the operability of the Emergency Governor and Emergency Trip Piston.

18.6.2.1 IF the Oil Trip Test verified the operability of the Emergency Governor and Emergency Trip Piston,

THEN an expeditious resolution of the Speed Governor deficiency shall be made without necessarily taking the turbine off line.

18.6.2.2 IF the Oil Trip Test determines the Emergency Governor and Emergency Trip Piston to be inoperable,

THEN perform an immediate shutdown of the turbine for restoration of the overspeed protective devices.

18.6.2.3 IF it is determined that the Speed Governor is malfunctioning

AND the backup overspeed is affected as determined by the Turbine System Engineer,

THEN perform an immediate shutdown of the turbine for restoration of the overspeed protective devices.

19.0 MASTER TRIP OPERABILITY TEST

19.1 Purpose

19.1.1 To demonstrate the operability of the Master Trip (MTS-3) device.

19.2 Prerequisites

19.2.1 The plant is operating at steady state conditions with no other turbine testing being performed.

19.3 Precautions and Limitations

None

19.4 Equipment

None

19.5 Instructions

19.5.1 Pull out the EMERG GOVERNOR OIL TRIP TEST control switch to the LOCKOUT position (Panel 7F).

19.5.2 Verify the amber LOCK OUT light is lit (Panel 7F).

19.5.3 IF during the performance of this test the expected results are not obtained,

THEN terminate the test and do not return the EMERG GOVERNOR OIL TRIP TEST control switch to its normal (down) position until the problem is dispositioned.

19.5.4 Simultaneously depress both TURBINE EMERGENCY TRIP pushbuttons (Panel 7F).

19.5.5 Verify the red TRIP light is lit (Panel 7F).

19.5.6 Place the EMERG GOVERNOR OIL TRIP TEST control switch in the RESET position (Panel 7F) and observe the green reset light comes on and the red trip light is extinguished.

19.5.7 Verify the red TRIP light is extinguished and the green RESET light is lit (Panel 7F).

19.5.8 Depress the EMERG GOVERNOR OIL TRIP TEST control switch (Panel 7F).

19.5.9 Verify the amber LOCK OUT light is extinguished (Panel 7F).

19.6 Acceptance Criteria

19.6.1 If any of the following criteria are not met or if any other deviation from proper operation is noted, follow the requirements of Procedure LS-OC-125 and note on Attachment 625.4.002-1.

19.6.1.1 Indicating lights operated as expected.

19.6.1.2 EMERG GOVERNOR OIL TRIP TEST control switch operated as expected.

19.6.2 IF it is determined by the Turbine System Engineer that the Master Trip Solenoid (MTS-3) or the Master Trip Valve is malfunctioning,

THEN perform the Oil Trip Test, Section 17.0, and the Speed Governor Operability Test, Section 18.0.

19.6.2.1 IF the Oil Trip Test and Speed Governor Operability Test are completed satisfactorily,

THEN an expeditious resolution of the Master Trip device deficiency shall be made without necessarily taking the turbine off-line.

19.6.2.2 IF the Oil Trip Test and the Speed Governor Operability Test are not completed satisfactorily,

THEN immediately perform a shutdown of the turbine.

20.0 LIFT OIL PUMP OPERABILITY TEST

20.1 Purpose

20.1.1 The purpose of this test is to demonstrate operability of the 10 lift oil pumps and associated motors.

20.2 Prerequisites

20.2.1 Turbine is " on the line " producing power.

20.2.2 Test should be performed during off peak hours.

20.2.3 OS permission shall be obtained prior to commencing this test.

20.3 Precautions and limitations

20.3.1 If at any time during this test bearing shaft vibrations increase by more than 0.5 mills peak to peak as measured on recorder 7F-0015A in the control room the test shall be stopped, the lift pumps turned off and the lift pump controls returned to normal after stop (auto).

20.3.2 If at any time during this test any bearing metal temperature exceeds 190°F as measured on recorder TR-624-1040 in the control room the test shall be stopped, the lift pumps turned off and the lift pump controls returned to normal after stop (auto).

20.4 Equipment

20.4.1 None

20.5 Instructions

20.5.1 Ensure all prerequisites are complete prior to start of test. If any of the following steps are not met, note on Attachment 625.4.002-1.

20.5.2 Locally, at each of the ten lift oil pumps, verify the following:

20.5.2.1 All pressure gauges read less than 50 psig.

20.5.2.2 No pump/motor shafts are turning.

20.5.3 From the control room switch, start all lift pumps. Monitor vibrations and bearing metal temperatures from control room recorders.

20.5.4 Locally, at each of the ten lift oil pumps, verify the following:

20.5.4.1 All pressure gauges indicate running pumps (expected readings greater than 500 psig).

20.5.4.2 Individual lift pump vent piping oil leakage is minimal. Expected acceptable leakage ranges from a few droplets to a benign full stream of oil. An active forceful blasting stream of oil is NOT acceptable.

20.5.4.3 No lift pump relief valves are bypassing significant amounts of oil into the box.

20.5.4.4 Each of the two (2) lift pump filters indicate clean.

20.5.5 From the control room, for all lift pumps with discharge pressures greater than 500 psig as indicated locally in Step 20.5.4.1, verify that the associated RED lift pump pressure indicating light on panel 7F is lit. Stop the lift pumps by placing the control in normal after stop (auto). Verify that all ten (10) lift pump pressure indicating lights on panel 7F are out.

20.5.6 Locally, at each of the ten lift pumps, verify the following:

20.5.6.1 All pressure gauges read less than 50 psig.

20.5.6.2 No pump/motor shafts are turning.

20.6 <u>Acceptance Criteria</u>

20.6.1 If any of the verifications requested in Step 20.5 are not met or if any other deviation from proper operation is noted, follow the requirements of Procedure LS-OC-125, and note on Attachment 625.4.002-1.

Attachment 625.4.002-1

Main Turbine Surveillances

OS Permission Signature			

Weekly

Date/Day			Instruction
Shaft Voltage (Section 8.0)	(mV)		Perform Weekly
MPR Operability (Section 12.0)	(I)		
Oil Trip (Section 17.0)	(I)		
Emergency D.C. Oil Pump (Section 14.0)			
Emergency D.C. Seal Oil Pimp (Section 15.0)			

Monthly

	Date Performed	Results	Instruction
Thrust Bearing Wear Detector	(+)		Perform once prior to the end of the first full calendar week of each month, or per Tech. Eval.
	(-)		
	Mwe		
Intercept Valve Transmitter/Receiver Test (Sec. 5.0)		(I)	
Bypass Valves (Section 10.)		(I)	
Extraction Check Valves (Section 9.0)		(I)	
Turning Gear Oil Pump (Section 13.0)		(I)	
Aux. Oil Pump (Section 16.0)		(I)	
Oil Tank Level Alarm (Section 7.0)		High	
		Low	

Quarterly

	Date Performed	Results		Instruction
Main Stop Valves (Section 4.0)		(I)		Perform once prior to the end of the first full calendar week of Jan, Apr, Jul. Oct, or per Surveillance Interval. *Also perform prior to Planned outages
Reheat Stop/Intercept Valves Full Closure (Sec. 6.0)		(I)		
Master Trip Operability Test (Section 19.0)		(I)		
Lift Pump Operation (Section 20.0)*		(I)		
Speed Governor Operability Test (Section 18.0)		(cv%)	(DEG)	

OS Review Signature (after each test day)	
Comments/Discrepancies:	

Stop Valve Times		
	Close	Open
Number 1		
Number 2		
Number 3		

Intercept Valve Times		
	Close	Open
Number 1		
Number 2		
Number 3		
Number 4		
Number 5		
Number 6		

Reheat Stop Times		
	Close	Open
Number 1		
Number 2		
Number 3		
Number 4		
Number 5		
Number 6		

Intercept and Reheat Stop	
Replace Fuse 13R-F25 at end of test	(I)

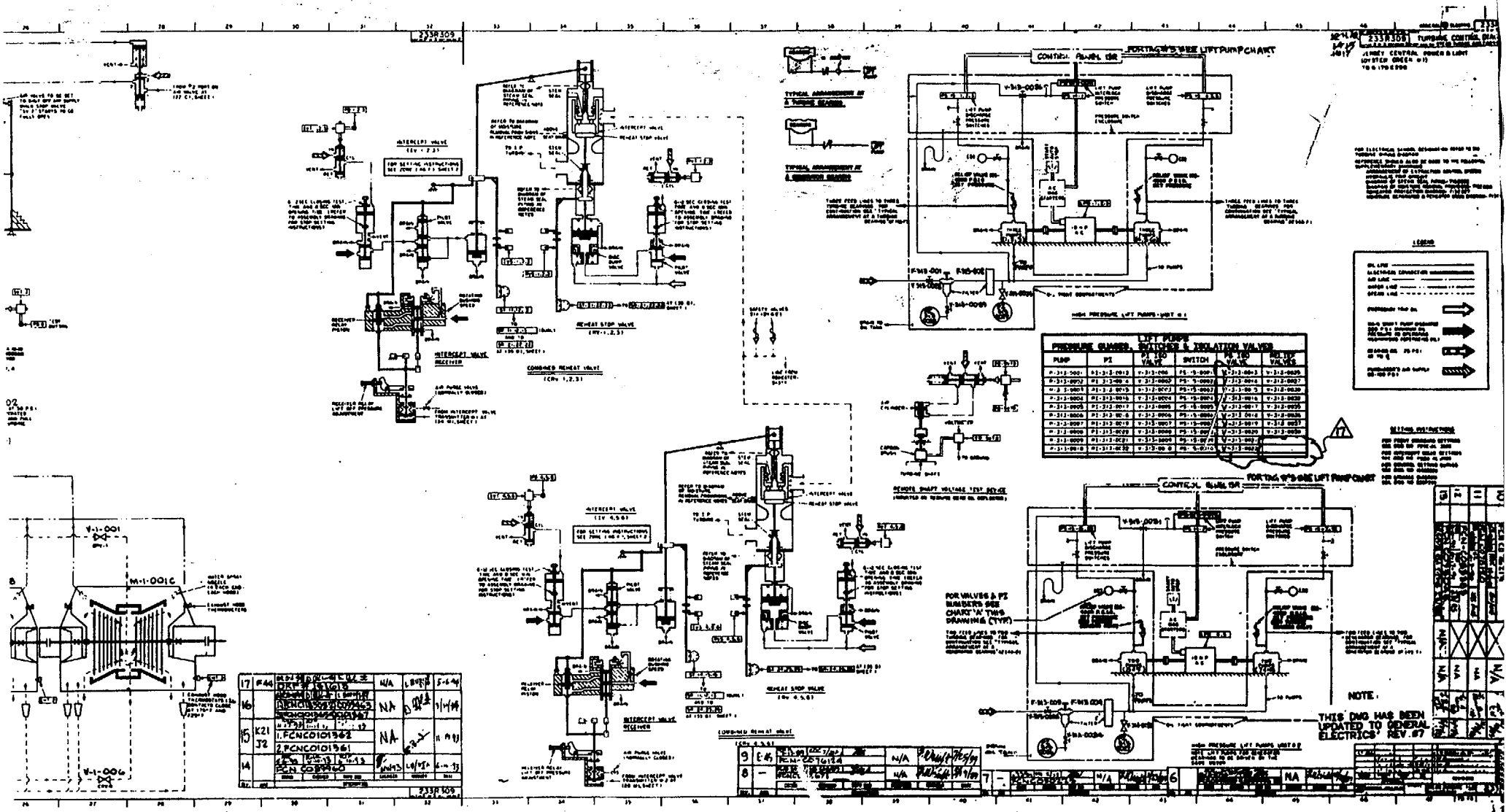
233R309
INTERCEPT VALVE
INTERCEPT VALVE RECEIVER
REHEAT STOP VALVE
COMBINED REHEAT VALVE
TYPICAL ARRANGEMENT OF A TURBINE GEARED
TYPICAL ARRANGEMENT OF A GENERATOR GEARED
CONTROL PANEL 15R
FORTING'S SIDE LIFT PUMP CHART
HIGH PRESSURE LIFT PUMPS UNIT #1
LIFT PUMPS
PRESSURE GAUGES, SWITCHES & ISOLATION VALVES
PUMP
PI
PI ISO VALVE
SWITCH
PS ISO VALVE
RELIEF VALVE
REMOTE SHAFT VOLTAGE TEST DEVICE
LEGEND
SETTING INSTRUCTIONS
FOR VALVES & PI NUMBERS SEE CHART 'A' THIS DRAWING (TYP)
NOTE:
THIS DWG HAS BEEN UPDATED TO GENERAL ELECTRICS' REV.#7
M-1-001C
M-1-006
Y-1-001
FCNC0101962
FCNC0101961
FCN C0101960

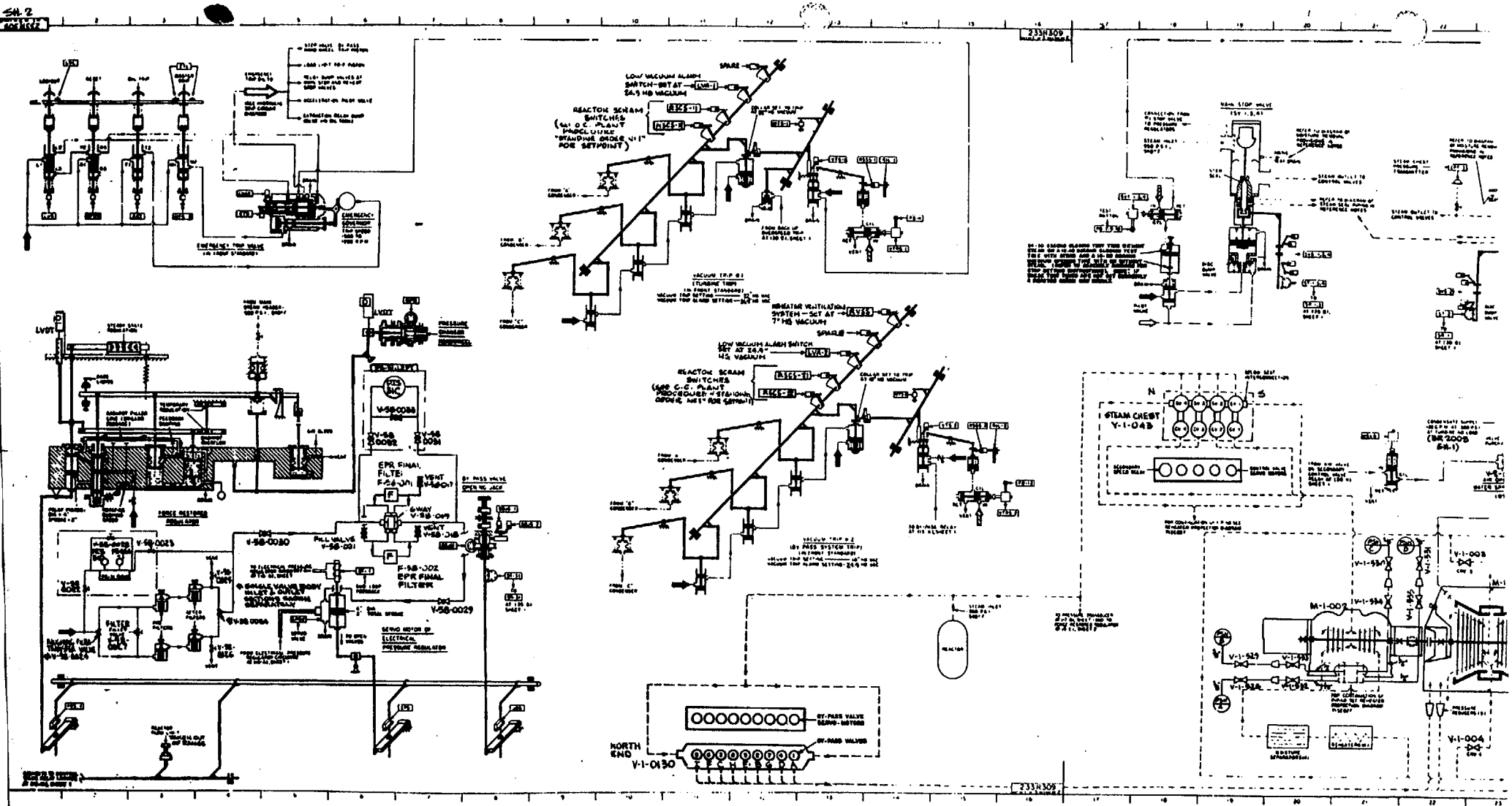
LOW VACUUM ALARM SWITCH-SET AT 24.5 HG VACUUM
REACTOR SCRAM SWITCHES
SPARE
REHEATER VENTILATION SYSTEM-SET AT 7" HG VACUUM
LOW VACUUM ALARM SWITCH SET AT 24.5" HG VACUUM
EPR FINAL FILTER
PILL VALVE
STEAM CHEST
NORTH END
V-1-0130
M-1-002
V-1-004

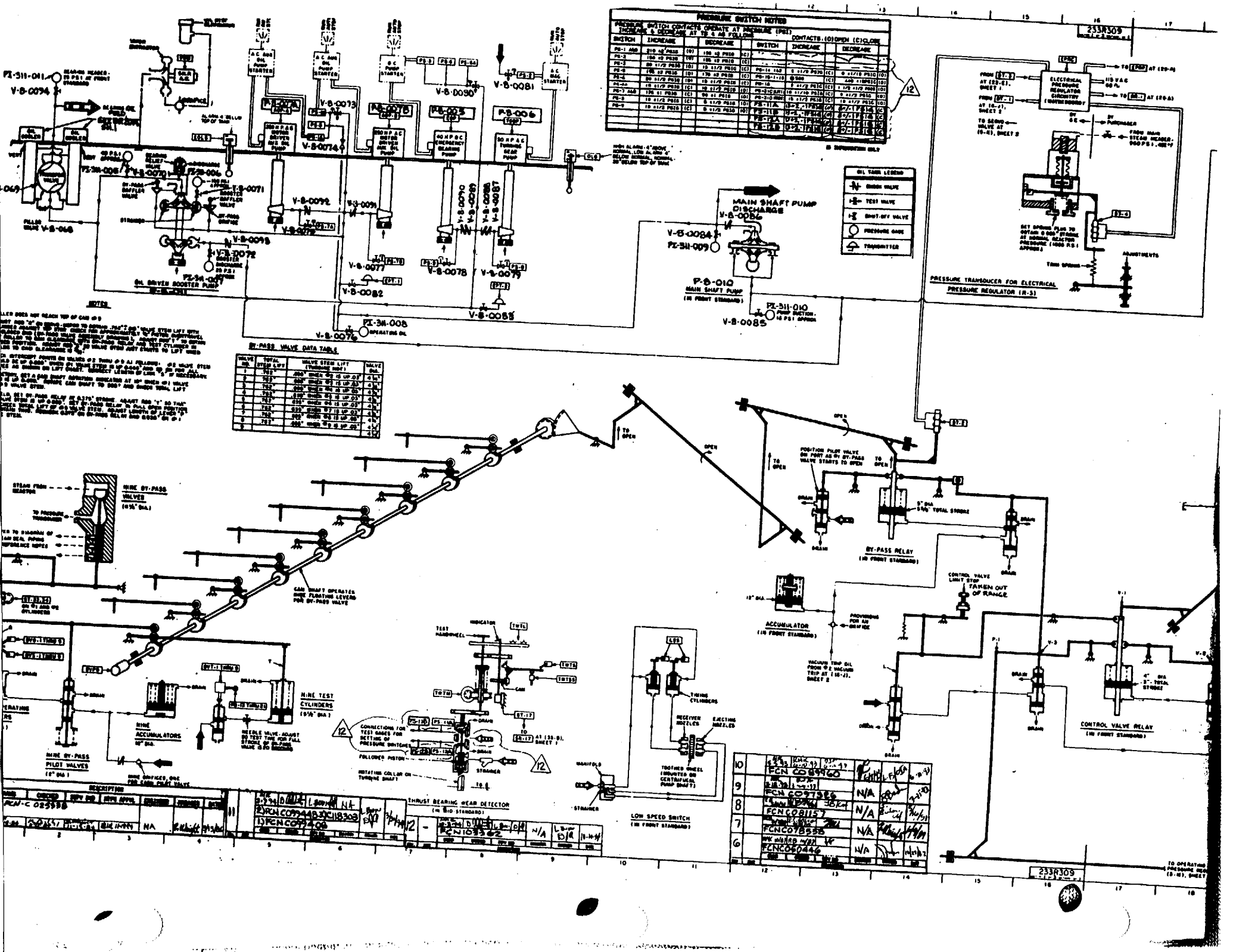
PRESSURE SWITCH NOTES
BY-PASS VALVE DATA TABLE
OIL TANK LEGEND
MAIN SHAFT PUMP DISCHARGE
OIL DRIVEN BOOSTER PUMP
MAIN SHAFT PUMP
PRESSURE TRANSDUCER FOR ELECTRICAL PRESSURE REGULATOR (R-5)
NINE BY-PASS VALVES
NINE BY-PASS PILOT VALVES
NINE ACCUMULATORS
NINE TEST CYLINDERS
BY-PASS RELAY
ACCUMULATOR
CONTROL VALVE RELAY
THRUST BEARING WEAR DETECTOR
LOW SPEED SWITCH
233R309

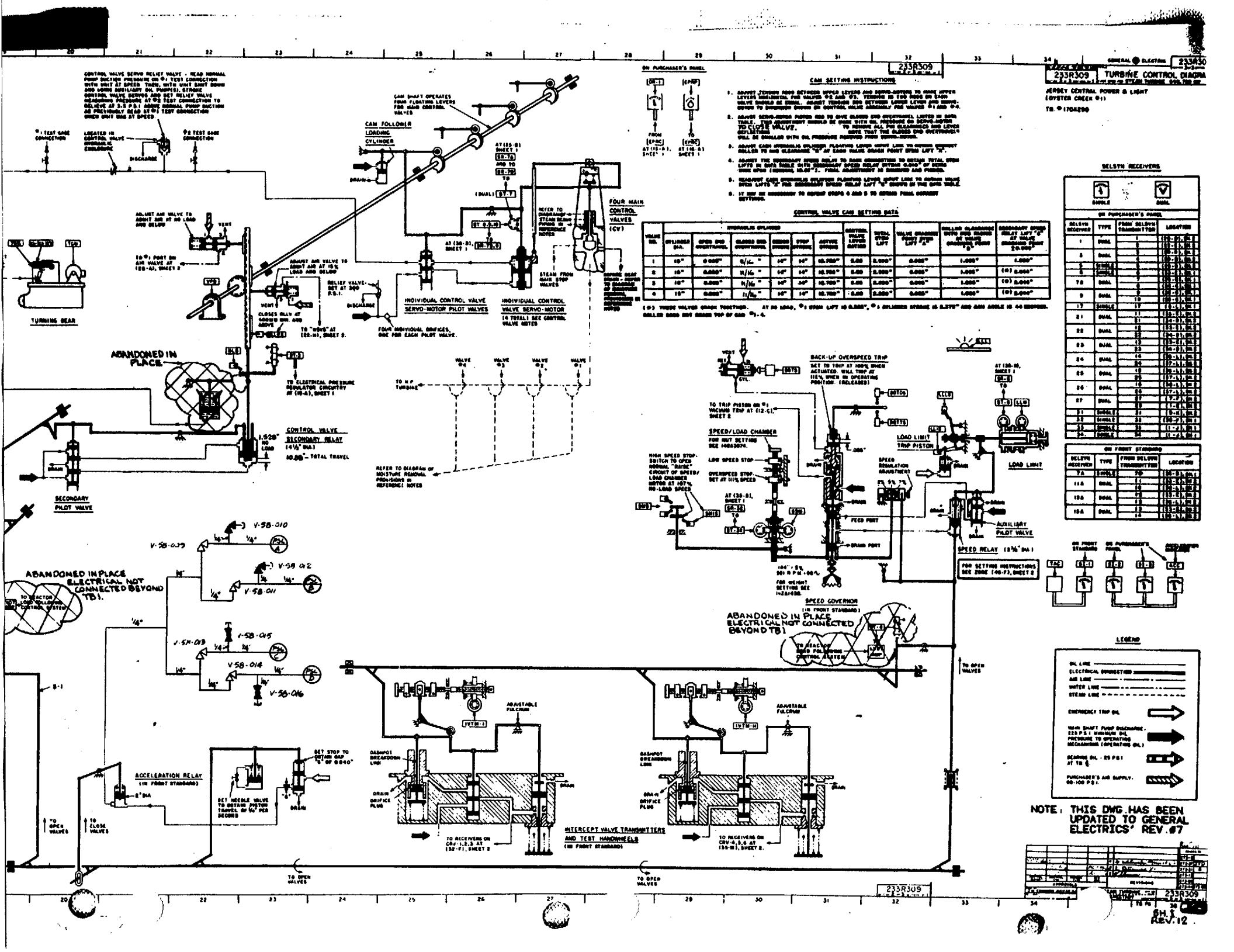
233R309
TURBINE CONTROL DIAGRAM
JERSEY CENTRAL POWER & LIGHT
(OYSTER CREEK #1)
TB. # 1704290
CAM SETTING INSTRUCTIONS
CONTROL VALVE CAM SETTING DATA
DELSYN RECEIVERS
ON FRONT STANDARD
LEGEND
TURNING GEAR
ABANDONED IN PLACE
CONTROL VALVE SECONDARY RELAY
SECONDARY PILOT VALVE
CAM FOLLOWER LOADING CYLINDER
CAM SHAFT OPERATES FOUR FLOATING LEVERS FOR CAM CONTROL VALVES
FOUR MAIN CONTROL VALVES (CV)
INDIVIDUAL CONTROL VALVE SERVO-MOTOR PILOT VALVES
INDIVIDUAL CONTROL VALVE SERVO-MOTOR (4 TOTAL) SEE CONTROL VALVE NOTES
FOUR INDIVIDUAL ORIFICES, ONE FOR EACH PILOT VALVE.
TO ELECTRICAL PRESSURE REGULATOR CIRCUITRY
TO H.P. TURBINE
BACK-UP OVERSPEED TRIP
SPEED/LOAD CHANGER
LOAD LIMIT TRIP PISTON
LOAD LIMIT
AUXILIARY PILOT VALVE
SPEED RELAY
SPEED GOVERNOR
ABANDONED IN PLACE ELECTRICAL NOT CONNECTED BEYOND TB1
ACCELERATION RELAY
INTERCEPT VALVE TRANSMITTERS AND TEST HANDWHEELS
TO OPEN VALVES
TO CLOSE VALVES
NOTE: THIS DWG. HAS BEEN UPDATED TO GENERAL ELECTRICS' REV. #7
SH. 1
REV. 12

QUESTION #SRO-3

A loss of all drywell cooling has occurred and you have entered Primary Containment Control, EMG-3200.02 when the drywell temperature entry conditions are exceeded.

The following conditions exist:

- All attempts to restore drywell cooling have failed.
- Drywell pressure is 2.75 psig and steady.
- When you direct the RO to "vent the containment per support procedure 31" the STA notifies you that the drywell temperature is approaching 200 degrees F.
- **NO** other entry conditions for Primary Containment Control or RPV control exist at this point.

Answer the following:
Are you allowed to vent the containment? Also, provide a basis for this action.

A. Yes, reduction of drywell pressure is the most important strategy at this point.

B. Yes, venting the drywell will also result in reduction in drywell temperature.

C. No, venting the drywell will result in exceeding the Containment Spray Initiation Limit.

D. No, venting the drywell may cause a inadequate NPSH for the Containment Spray Pumps.

ANSWER: C

Question SRO 3: Oyster Creek's position

The question asks:

"A loss of all drywell cooling has occurred and you have entered Primary Containment Control, EMG-3200.02 when the drywell temperature entry conditions are exceeded.

The following conditions exist:

- All attempts to restore drywell cooling have failed
- Drywell pressure is at 2.75 psig and steady
- When you direct the RO to "vent the containment per support procedure 31" the STA notifies you that the drywell temperature is approaching 200 degrees F
- **NO** other entry conditions for Primary Containment Control or RPV control exist at this point.

Answer the following: Are you allowed to vent the containment? Also, provide a basis for this action."

In the Containment Pressure leg of Primary Containment Control, if primary containment isolation is NOT required (i.e., pressure is less than 3 psig), direction is given to vent the containment in order to maintain containment pressure below 3 psig. Maintaining pressure below 3 psig assures no automatic initiations or isolations will occur.

Actions that automatically occur at 3 psig are:

- Reactor scram signal is generated on high drywell pressure
- Core Spray system start is generated on high drywell pressure
- EDG #1 and #2 start and idle on high drywell pressure
- RWCU system isolation on high drywell pressure
- Shutdown Cooling system isolation on high drywell pressure
- Primary Containment isolation on high drywell pressure (sumps, ventilation and purge isolation valves, TIPs and TIP purge, and RB to Torus vacuum breakers)

By maintaining drywell pressure below 3 psig, it simplifies mitigation strategy by not having to deal with the above initiations and isolations.

Answers "C" and "D" CANNOT be correct, as it states venting is NOT allowed. This would be in direct conflict with the directions to vent the containment and maintain pressure below 3 psig.

Answers "A" and "B" are both correct for the following reasons.

In answer "A", directions to vent the containment per the steps in the Pressure Control leg do take precedence over any directions to spray in the Drywell Temperature leg. While it is true that we cannot spray the drywell if torus pressure and drywell temperature are not within the Containment Spray Initiation Limit (CSIL), there is absolutely NO direction implicit or explicit to secure the venting if it will result in dropping below the

CSIL. By procedure, we are required to vent the containment to keep it less than 3 psig, to prevent the automatic initiations and isolations mentioned above.

In answer "B", venting the containment will result in a reduction of temperature. This is a classic Ideal Gas Law concept. Since the containment volume is constant, any reduction in pressure will result in a corresponding reduction in temperature. This is expressed below.

$$P_1V_1/T_1 = P_2V_2/T_2$$

This concept is part of the Generic Fundamentals course the candidates went through Any reduction in drywell pressure will cause a corresponding reduction in drywell temperature.

While the basis for answer "A" is directly related to the EOPs, the basis for answer "B" is a fundamental concept, which is reinforced during all phases of training. The question did NOT distinguish between a procedurally driven concept or a fundamental concept. Therefore, answers "A" and "B" are correct.

Oyster Creek recommendation: Accept "A" and "B"

References: EMG-3200.02, Primary Containment Control (sent previously)
EOP User's Guide, pp. 2-28 and 2-29 (sent previously)
BWR Generic Fundamentals, Thermodynamics, Chapter 3, Steam (sent previously)
DOE Fundamentals Handbook, Thermodynamics, Heat Transfer, and Fluid Flow (sent previously)

PRIMARY CONTAINMENT PRESSURE CONTROL

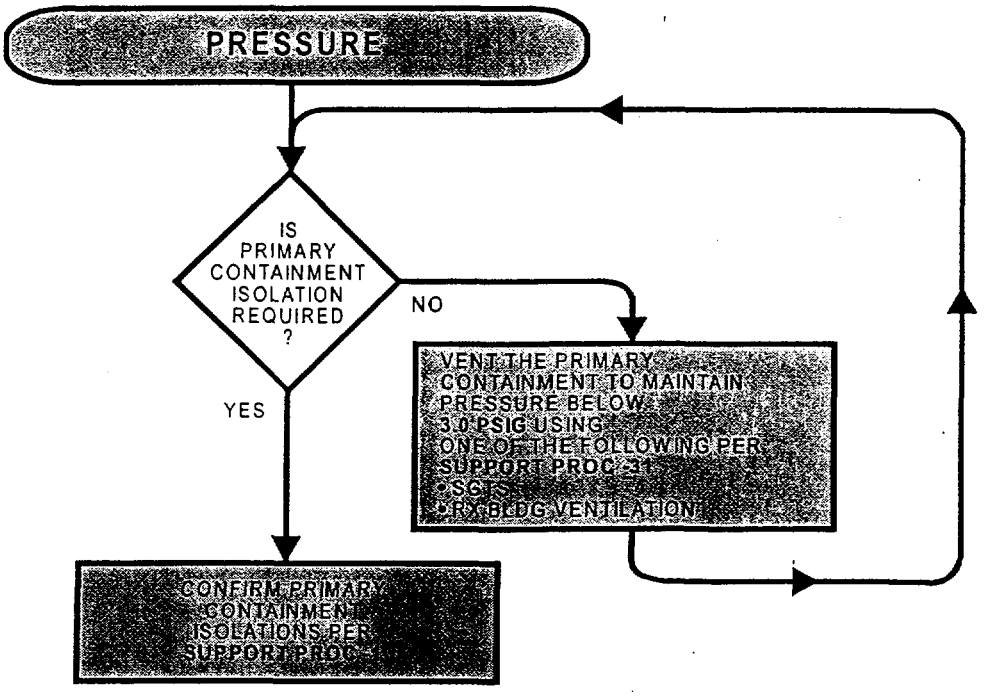

DISCUSSION

This question is asked to determine if a Reactor Lo-Lo water level (86 in.) OR high Drywell pressure (3.0 psig) signal is present. If neither signal is present, the operator is permitted to use SBGT or Reactor Building Ventilation to vent the Primary Containment via the 2 in. vent lines as necessary to maintain Drywell pressure below 3 psig. If an isolation signal is present, the operator is directed to abandon containment venting in accordance with Support Procedure -31 and confirm Primary Containment isolations in accordance with Support Procedure -1.

PRIMARY CONTAINMENT PRESSURE CONTROL

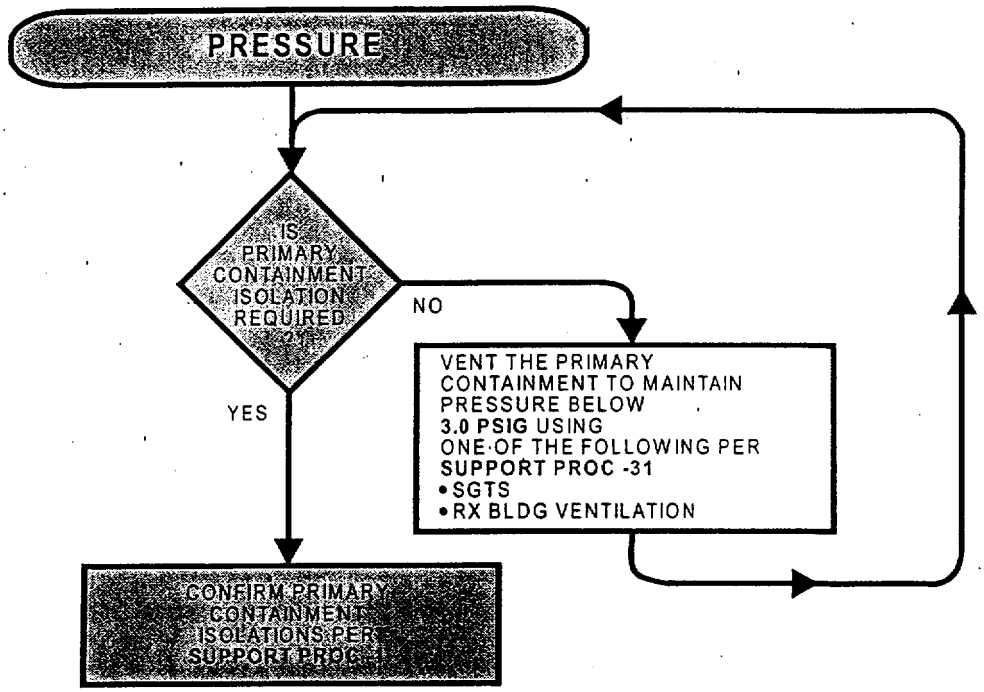

DISCUSSION

The initial action taken to control Primary Containment pressure employs the same methods used during normal Plant operations: using 2 in. containment vent lines to SGTS or Reactor Building Ventilation as required to maintain containment pressure below the high Drywell pressure scram setpoint. Thus the Primary Containment Pressure Control leg provides a smooth transition from normal system operating procedures to emergency operating procedures, and assures that normal methods of Primary Containment pressure control are attempted in advance of initiating more complex actions to terminate increasing Primary Containment pressure.

Support Procedure -31 provides instructions for venting the Primary Containment via the 2 in. vents to either the SGTS train or the Reactor Building Ventilation system. The choice of systems is left to LOS discretion. The 2 in. Torus vents are the preferred vent path because they take advantage of the Torus scrubbing which will help remove Drywell airborne radionuclides as they flow down the downcomers and bubble through the Torus water volume before exiting the 2 in. Torus vent line.

If the Torus cannot be vented because of high Torus level or mechanical failure of the 2 in. Torus vent valves, Support Procedure -31 provides contingency actions for venting the Drywell through the Drywell 2 in. vent lines.

No direction is given to the operator at this time to override isolation interlocks or to exceed normal offsite release rates. If Primary Containment pressure cannot be controlled below 3.0 psig or if RPV level drops below 86 in., a containment isolation will occur and venting will be terminated. If higher than normal offsite release rates are experienced while venting, the operator should secure the vent path.

It should be noted that use of Support Procedure -31 is only required as necessary to maintain Primary Containment pressure below 3.0 psig. If upon entry to the PRIMARY CONTAINMENT CONTROL procedure, Primary Containment pressures are at their normal values and not increasing, venting per Support Procedure -31 is not required.

BWR GENERIC FUNDAMENTALS

THERMODYNAMICS

CHAPTER 3
STEAM

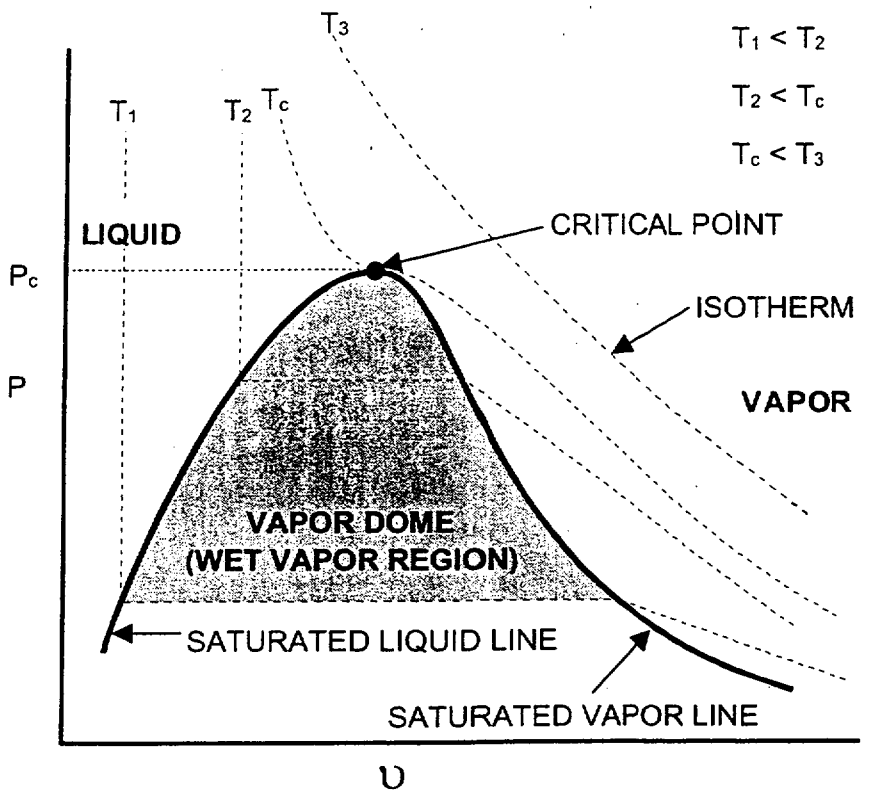

STUDENT TEXT

REV 3

©2000 General Physics Corporation, Columbia, Maryland

All rights reserved. No part of this book may be reproduced in any form or by any means, without permission in writing from General Physics Corporation.

Using the element's atomic weight improves the accuracy of the calculation. However, the added accuracy is insignificant and is not usually required. Hence, the following relationship can be made:

$$\text{Number of moles} = \frac{\text{Mass (grams)}}{\text{Atomic Mass}\left(\frac{\text{grams}}{\text{mole}}\right)}$$

Equation 3-2

This is true for all substances whether they be solids or fluids (liquids, vapors, or gases).

Calculate the number of moles of U-238 that are present in a fuel rod containing 3 kg of U-238.

Example 3-1

IDEAL GASES

Most familiar gases are colorless and odorless, such as the oxygen and nitrogen of the atmosphere, the bubbles of carbon dioxide that rise in a glass of soda pop, and the hydrogen or helium gas that is used to fill balloons. A few gases are colored; for example, nitrogen dioxide is red-brown and iodine vapor is violet. Anything that we can smell exists in the gaseous state, because our sense of smell reacts only to gases.

The word "gas" refers to a substance that at ordinary temperatures and pressures is present in the gaseous state only. The word "vapor" is used for gas that has evaporated from a material that is usually solid or liquid at ordinary temperatures.

Gases have observable physical properties. They fill available space, but can be compressed into a smaller volume by applying pressure. They are affected by temperature, can expand and contract, or exert different pressures. It is obvious from the force of the wind on a stormy day that gases can flow readily from place to place and that they have mass. However, gases are not very dense. An air-filled vessel floats on the surface of a pond because the air is less dense than the water.

Because of their interrelated effects, temperature, pressure, and volume must be specified when discussing gases. The quantitative relationships among the temperature, pressure, and volume of a gas are expressed in the gas laws, which were first explored in the eighteenth and nineteenth centuries. Any gas that perfectly obeys the gas laws is called an ideal gas.

The properties of an ideal gas are constant throughout its mass. Chemical reactions, external forces, or molecular forces do not effect ideal gas molecules.

The Ideal Gas Law is useful because at low pressures, all real gases behave like an ideal gas. Monatomic gas behavior is similar to perfect gases. It can be described very accurately using the Ideal Gas Law, such as helium (He) and argon (Ar). Accuracy will decrease with diatomic and polyatomic gases, such as oxygen (O_2) and carbon dioxide (CO_2). Also, as gas pressure increases, the accuracy decreases. Experimentally derived corrections allow the Ideal Gas Law to be applied to the behavior of these gases with desired accuracy.

© 2000 GENERAL PHYSICS CORPORATION

CHARLES' LAW

Figure 3-1 shows a piston and cylinder assembly filled with a gas at absolute temperature (T_1) and volume (V_1). The piston is free to move against a constant external pressure (P_1). A burner is provided to allow heat to be added to the gas.

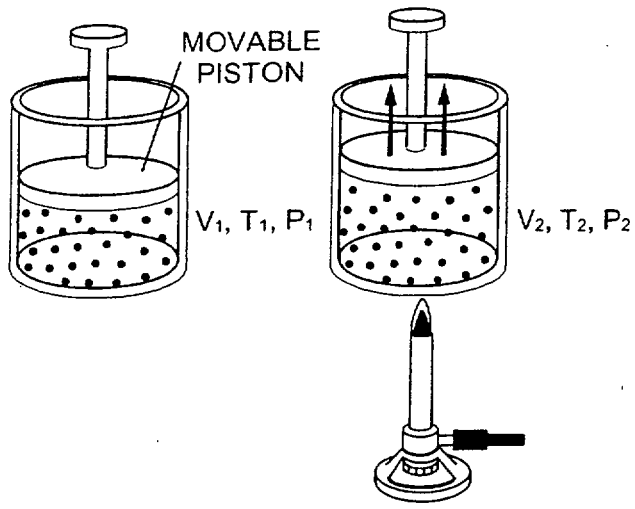

Figure 3-1 Charles' Law

Adding heat causes the temperature of the gas to increase. As the gas temperature increases, the volume increases and applies pressure against the piston causing the piston to move outward. Once the pressure on the internal piston face equalizes to the external pressure (P_1), the piston stops moving. The system is again in equilibrium. The initial pressure (P_1) is the same, but the absolute temperature (T_2) is higher and the volume (V_2) is greater.

Repeating the process of adding heat, causing the piston to move outward, and remeasuring the process variables of gas volume and temperature leads to the following conclusion:

> "At low pressures, the volume of a gas at constant pressure is directly proportional to the absolute temperature of the gas."

This statement is Charles' Law, written mathematically as:

$$\frac{V_1}{T_1} = \frac{V_2}{T_2} = \frac{V}{T} = k \text{ (constant)}$$

At a constant pressure (P)

Equation 3-3

Equation 3-3 is valid only for <u>absolute temperature</u> measurements of low-pressure gases; the constant (k) is different for each gas.

BOYLE'S LAW

The piston and cylinder assembly is reconfigured by removing the burner. The cylinder is filled with a gas at volume (V_1), temperature (T_1), and at an absolute pressure (P_1). Heat will not be added to the gas through the cylinder, so the temperature of the gas will remain constant.

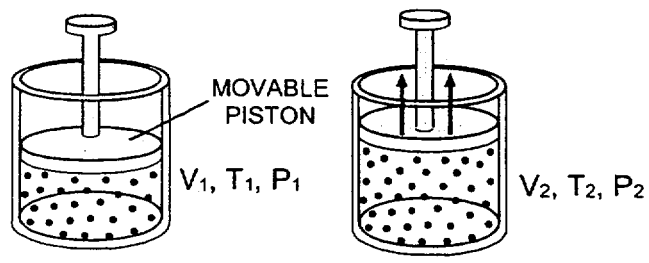

Figure 3-2 Boyle's Law

The piston is physically moved to a new position, creating a new volume (V_2) and absolute pressure (P_2). After V_2 and P_2 are measured, the procedure is repeated, recording the data. Examining the measured variables, the following conclusion about the gas may be derived:

> "At low pressures, the volume of a gas at constant temperature is inversely proportional to the absolute pressure of the gas."

© 2000 GENERAL PHYSICS CORPORATION

This statement is Boyle's Law, written mathematically as:

$$P_1V_1 = P_2V_2 = PV = k \text{ (constant)}$$

At a constant temperature (T)

Equation 3-4

Equation 3-4 is valid only for absolute pressure measurements; the constant (k) is different for each gas. Since temperature is constant, the units of measure have no effect on the equation.

COMBINED GAS LAW

Charles' Law and Boyle's Law are valid for ideal gases and real gases in the pressure range where a real gas behaves like an ideal gas. Therefore, any real gas at low pressure will obey these laws and may be combined to derive the following law:

> "For a given mass of any gas, the product of the absolute pressure and volume occupied by the gas, divided by its absolute temperature, is a constant."

This statement is the Combined Gas Law, written mathematically as:

$$\frac{P_1V_1}{T_1} = \frac{P_2V_2}{T_2} = \frac{PV}{T}$$

Equation 3-5

A compressor discharges into an air receiver and cycles off when the pressure in the receiver reaches 160 psia. During the compression, heat is added to the air. The temperature in the receiver is 140°F. Assuming no air loads are in service, at what temperature (°F) should the compressor restart to maintain the receiver above 150 psia?

Example 3-2

© 2000 GENERAL PHYSICS CORPORATION

IDEAL GAS LAW

By applying the gas laws already presented in this chapter, we can derive the Ideal Gas Law. Remember, Boyle worked with constant temperature; Charles worked with constant pressure. Their laws will be further expanded to form the Ideal Gas Law.

An ideal gas is defined as one in which PV/T = K (a constant) under all circumstances. PV/T = K is a specific application of the General Energy Equation. Though no such gas exists, the fact that a real gas behaves approximately like an ideal gas provides a basis for theories for the gaseous state.

Experimenters discovered the constant (K), in terms of the number of moles (n) of gas in a sample, by understanding that the molar volume of a gas at 273K (0°C) and standard pressure [1 atmosphere (atm) or 14.7 psia] is 22.4 liters.

$$\frac{PV}{T} = K$$

Where:

P = Pressure (1 atmosphere or 14.7 psia)

V = Volume (22.4 liters)

T = Temperature (273 K or 0°C)

K = Constant (in terms of number of moles

Substituting and rearranging:

$$\frac{PV}{T} = nR$$

$$R = \frac{PV}{nT}$$

$$R = \frac{(1\,\text{atm})(22.4\,\text{L})}{(n)(273\,\text{K})}$$

Where:

n = number of moles of gas

R = universal gas constant (a conversion factor)

Empirical data has shown that the value of the universal gas constant (R) is:

$$R = 0.0821\frac{\text{atm liters}}{\text{mole K}} \text{ or } 8.314\frac{\text{J}}{\text{mole K}}$$

Equation 3-6

The universal gas constant (R) is an energy equivalent for PV energy. To convert the units of the universal gas constant from atm liters (atm ℓ) to Joules (J):

$$(1\text{ atm }\ell)\left(\frac{14.7\frac{\text{lb}_f}{\text{in}^2}}{1\text{ atm}}\right)\left(\frac{61.03\text{ in}^3}{1\ell}\right) = 897.1\text{ in lb}_f$$

$$(897.1\text{ in lb}_f)\left(\frac{1\text{ ft}}{12\text{ in}}\right) = 74.8\text{ ft lb}_f$$

Since:

$$1\text{ ft lb}_f = 1.35582\text{ J}$$

Then:

$$(74.8\text{ ft lb}_f)\left(\frac{1.35582\text{ J}}{1\text{ ft lb}_f}\right) = 101.4\text{ J}$$

Thus:

$$1\text{ atm }\ell = 101.4\text{ J}$$

Equation 3-7

© 2000 GENERAL PHYSICS CORPORATION

DOE-HDBK-1012/1-92
JUNE 1992

DOE FUNDAMENTALS HANDBOOK

THERMODYNAMICS, HEAT TRANSFER, AND FLUID FLOW

Volume 1 of 3

U.S. Department of Energy
Washington, D.C. 20585

FSC-6910

Distribution Statement A. Approved for public release; distribution is unlimited.

COMPRESSION PROCESSES

Compression and pressurization processes are very common in many types of industrial plants. These processes vary from being the primary function of a piece of equipment, such as an air compressor, to an incidental result of another process, such as filling a tank with water without first opening the valve..

EO 1.32 **Apply the ideal gas laws to SOLVE for the unknown pressure, temperature, or volume.**

EO 1.33 **DESCRIBE when a fluid may be considered to be incompressible.**

EO 1.34 **CALCULATE the work done in constant pressure and constant volume processes.**

EO 1.35 **DESCRIBE the effects of pressure changes on confined fluids.**

EO 1.36 **DESCRIBE the effects of temperature changes on confined fluids.**

Boyle's and Charles' Laws

The results of certain experiments with gases at relatively low pressure led Robert Boyle to formulate a well-known law. It states that:

> the pressure of a gas expanding at constant temperature varies inversely to the volume, or

$$(P_1)(V_1) = (P_2)(V_2) = (P_3)(V_3) = \text{constant.} \qquad (1\text{-}40)$$

Charles, also as the result of experimentation, concluded that:

> the pressure of a gas varies directly with temperature when the volume is held constant, and the volume varies directly with temperature when the pressure is held constant, or

$$\frac{V_1}{V_2} = \frac{T_1}{T_2} \quad \text{or} \quad \frac{P_1}{P_2} = \frac{T_1}{T_2}. \qquad (1\text{-}41)$$

Ideal Gas Law

By combining the results of Charles' and Boyle's experiments, the relationship

$$\frac{Pv}{T} = \text{constant} \tag{1-42}$$

may be obtained. The constant in the above equation is called the ideal gas constant and is designated by R; thus the ideal gas equation becomes

$$Pv = RT \tag{1-43}$$

where the pressure and temperature are absolute values. The values of the ideal gas constant (R) for several of the more common gases are given in Figure 39.

Gas	Chemical Symbol	Molecular Weight	Gas Constant ft-lbf/lbm°R	Specific Heat Btu/lbm		Specific Heat Ratio
		M	R	c_p	c_v	k
Air		28.95	53.35	0.172	0.240	1.40
Carbon dioxide	CO_2	44.00	35.13	0.160	0.205	1.28
Hydrogen	H_2	2.016	766.80	2.44	3.42	1.40
Nitrogen	N_2	28.02	55.16	0.176	0.247	1.40
Oxygen	O_2	32.0	48.31	0.155	0.217	1.40
Steam	H_2O	18.016	85.81	0.36	0.46	1.28

Steam at pressures less than 1 psia behaves very nearly as a perfect gas.

Figure 39 Ideal Gas Constant Values

The individual gas constant (R) may be obtained by dividing the universal gas constant (Ro) by the molecular weight (MW) of the gas, $R = \frac{Ro}{MW}$. The units of R must always be consistent with the units of pressure, temperature, and volume used in the gas equation. No real gases follow the ideal gas law or equation completely. At temperatures near a gases boiling point, increases in pressure will cause condensation to take place and drastic decreases in volume. At very high pressures, the intermolecular forces of a gas are significant. However, most gases are in approximate agreement at pressures and temperatures above their boiling point.

The ideal gas law is utilized by engineers working with gases because it is simple to use and approximates real gas behavior. Most physical conditions of gases used by man fit the above description. Perhaps the most common use of gas behavior studied by engineers is that of the compression process using ideal gas approximations. Such a compression process may occur at constant temperature (pV = constant), constant volume, or adiabatic (no heat transfer). Whatever the process, the amount of work that results from it depends upon the process, as brought out in the discussion on the First Law of Thermodynamics. The compression process using ideal gas considerations results in work performed on the system and is essentially the area under a P-V curve. As can be seen in Figure 40, different amounts of work result from different ideal gas processes such as constant temperature and constant pressure.

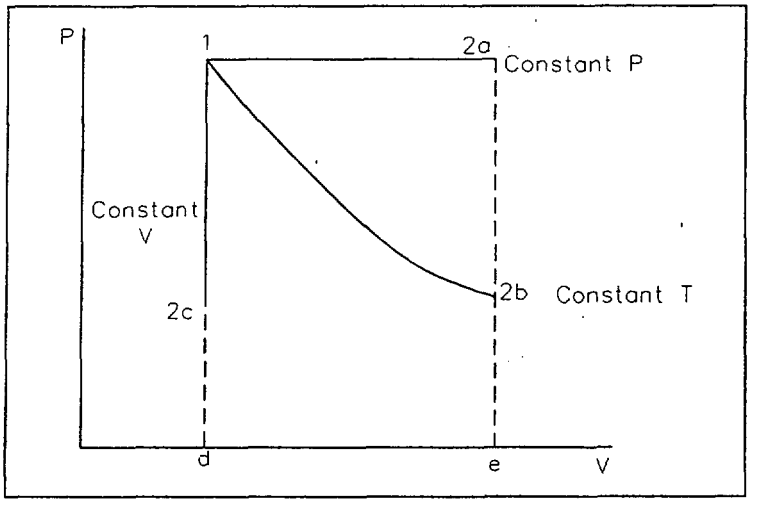

Figure 40 Pressure-Volume Diagram

Fluid

A *fluid* is any substance that conforms to the shape of its container. It may be either a liquid or a gas.

Compressibility of Fluids

Usually a fluid may be considered incompressible when the velocity of the fluid is greater than one-third of the speed of sound for the fluid, or if the fluid is a liquid. The treatment of a fluid that is considered incompressible is easy because the density is assumed to be constant, giving a simple relationship for the state of the substance. The variation of density of the fluid with changes in pressure is the primary factor considered in deciding whether a fluid is incompressible.

DISCUSSION (CONTINUED)

Chugging refers to a problem that can occur when steam from a LOCA break in the Drywell passes to the exit of the downcomers and condenses. The pressure of the steam initially displaces water down and out of the downcomer, but as the volume of non-condensables in the steam and the dp between the Drywell and Torus decreases, a point is reached where the steam in the downcomers rapidly condenses, and water fills the space originally occupied by the steam bubbles. This phenomenon occurs cyclically and causes stresses that could eventually lead to failure at the junction of the downcomer and vent header. A break at the downcomer connection to the Drywell vent header would create a pathway bypassing the pressure suppression function of the Primary Containment. Steam discharging through the Drywell vent would then directly pressurize the Torus air space rather than being discharged to and condensed in the water in the Torus. This could lead to rapid pressurization with potential failure of the Primary Containment.

With sufficient non-condensables still present in the Drywell atmosphere (indicated by Torus pressure below 12.0 psig) chugging will not occur, therefore the Primary Containment Pressure Control leg will not direct the operator to spray the Drywell until this limit is exceeded. Refer to the EOP Figures and Limits section of this document for additional details of the Suppression Chamber Spray Initiation Pressure Limit.

Prior to spraying the Drywell, rotating electrical equipment that is not qualified in a spray environment (recirculation pumps and Drywell recirculation fans) is shut down to preserve this equipment.

No instruction to initiate a Reactor scram is specified in this or in subsequent steps of this section of the procedure because containment pressure is above the high Drywell scram setpoint (3.0 psig.) Drywell pressure above 3.0 psig also requires entry to the RPV CONTROL procedure, which will pursue actions to shut down the Reactor when the 3.0 psig setpoint is reached.

Although the Containment Spray Initiation Limit (CSIL) is still applicable, no instructions are given in this leg to verify that the combination Drywell bulk temperature and Drywell pressure are within the curve prior to spraying the Drywell. By determining Torus pressure to be above 12.0 psig, containment parameters will automatically be in the acceptable range of the Containment Spray Initiation Limit for spraying the Drywell. Refer to Figure G of the EOP Figures and Limits section of this document for additional details of the CSIL.

When Drywell sprays are required, Support Procedure - 29 provides instructions for manual initiation of Drywell sprays. Following the "WAIT" step is an Alert flag. EPIP-OC-.01 recommends an Alert Classification if Torus pressure is above 12.0 psig.

Pertains to spray – does not relate to venting. Still think this is an issue – may be a flaw in EOPs

QUESTION #SRO-7

It is a particularly cold January night. The Turbine Building Operator calls you up to let you know that the 4160 V switchgear room temperature is abnormally cool with a local room thermometer reading only about 40 degrees F.

What immediate action(s) are required?

A. Initiate a Temporary Configuration Change Package (TCCP) and install a portable heater in the room.

B. Initiate an Action Request to install a portable heater in the room.

C. Conservatively, declare the 4160 Switchgear Room Fire Suppression System inoperable and assign a continuous Fire Watch in the room.

D. Determine the reactor must be placed in the COLD SHUTDOWN CONDITION while attempting to resolve any HVAC problems.

ANSWER: D

Question SRO 7: Oyster Creek's position

The question asks:

"It is a particularly cold January night. The Turbine Building Operator calls you to let you know that the 4160 V switchgear room temperature is abnormally cool with a local room thermometer reading only about 40 degrees F.

What immediate action(s) are required?"

The suggested answer "D" is NOT correct. The stated explanation assumed this condition would result in the C Battery being declared inoperable, forcing a Tech Spec shutdown to cold shutdown conditions. The C battery is housed within a separate room inside the A/B 4160 V switchgear room. The C Battery room has its own separate ventilation system with thermostatically controlled heaters. Therefore, the stated question conditions do not affect the C Battery.

The question as presented is still a valid question. Turbine Building HVAC operating procedures require us to maintain temperature above 50 degrees F in the 4160 V switchgear room. In the event it drops below 50 degrees, compensatory actions must be taken. These compensatory actions would entail installing portable heating as required, to assure temperatures are maintained above 50 degrees.

The actions to install portable heaters are driven by the Work Control Process and the Temporary Configuration Control Process.

Within the TCCP Procedure (CC-AA-112, Rev. 7) step 4.1.8, covers Installation of the TCCP. In the situation given in the question, installing temporary heating will involve Operations as well as Maintenance Department personnel. Installing the TCCP (temporary heater installation) requires the initiation of an Action Request (AR) in order to track the work to completion. The AR is required per WC -AA-101-1001, Work Screening and Processing.

Answer "A" is a correct statement, in that initiation of a TCCP and installing a portable heater in the room will mitigate the problem. Answer "B" is a correct statement, in that initiation of an Action Request is the first step to have a portable heater installed in the room.

Therefore, answers "A" and "B" are correct statements, and would both lead to portable heating being installed in the room.

Oyster Creek recommendation: Accept "A" and "B"

References: Procedure 340.3, 125 Volt DC Distribution System C, pp. 2.0 and 16.0 (sent previously)
Procedure 328, Turbine Building HVAC(revision 43), Sect 5.2
CC-AA-112, Temporary Configuration Changes (revision 7) pp. 1,5-11
WC -AA-101-1001, Work Screening and Processing (revision 2), pp. 5, 7

PROCEDURE HISTORY

REV	DATE	ORIGINATOR	SUMMARY OF CHANGE
19	01/97	T. Corcoran	Add requirement to enter Technical Specification 3.7.A.4 LCO when transferring static chargers.
20	03/99	M. Heck	Added TABLE OF CONTENTS. Added REFERENCES section. Added GL 89-10 DC valve requirement steps. Added NORMAL OPERATION and ATTACHMENT sections. Made administrative changes to bring the procedure in line with the writer's standard. Added steps to address the tripping of Reactor Feed Pump A and Cleanup Recirc Pump A. Added steps to declare the C Battery inoperable if temperature limits are exceeded.
21	09/99	J. Freeman	Provide alternate guidance on static charger voltage adjustments and delete requirement for elect. maint. support.
22	11/99	M. Heck	Changed to add Tech Spec LCO numbers associated with MOV inoperability. Updated references. Added installation of jumpers when removing C Battery or C Distribution Center from service per CAPs 1998-1202 and 1998-1428.
23	10/00	M. Heck	Changed PM 25101O reference to PM 73501O. The rotation of the C Chargers has been moved from PM 25101O to PM 73501O.
24	11/01	M. Heck D. Lorentzen	Deleted all steps associated with 4160V Swgr jumpers. Revised C Battery Room operating temperatures to agree with Procedure 328.1. Added step for declaring C Battery inoperable below 124.2 VDC. Procedure Upgrade Project – format changes only.
25	09/02	J. Ruark	Adjust charger voltage to equalize charger voltage with bus voltage prior to closing charger output breaker (CAP O2002-1170.)
26	02/03	M. Heck	Changed to declare C Battery inoperable based on battery temperature, not room temperature (CAP O2003-0046). Added clarification on where to read voltage values for several steps.

9.2.4 Battery capacity diminishes below 77°F. However, capacity at ≥ 50°F is acceptable due to available reserve. If any C Battery cell temperature drops below 50°F, C Battery shall be considered inoperable.

9.2.5 Accelerated loss of battery life occurs above 104°F. Battery damage may occur at 120°F. If Battery Room temperature increases to 120°F for more than 24 hours, C Battery shall be considered inoperable.

9.2.6 Do not place the static chargers C1 and C2 in parallel operation on Distribution Center C.

9.2.7 The battery is not to be disconnected from the C Distribution Center while the plant is > 212°F or operating at power.

9.2.8 Alarms for the 125 VDC System for C Battery are as follows:

1. Degraded Voltage Set Point 130.8 ± 0.2 Volts via BUS C UV (9XF-2-d)

2. Low Voltage Set Point 115 V ± 1 Volts via BAT CHG C1 TROUBLE (U-4-f) or BAT CHG C2 TROUBLE (U-5-f)

9.2.9 In order to maintain the seismic qualifications of the following switchgear/motor control centers, any breakers required to be racked out, shall be removed from their switchgear/motor control center cubicle and stored properly. During an outage, if the switchgear/motor control center is not required to be available, this precaution does not apply. Switchgear affected are 4160V 1C and 1D, Motor Control Centers 1A21, 1A21A, 1A21B, 1A23, 1A24, 1B21, 1B21A, 1B21B, 1B23, 1B24. DC-1, DC-2, and Vital Motor Control Centers 1A2, 1B2, and 1AB2.

9.2.10 With the DC Distribution Center C inoperable per Technical Specification 3.7.A.4, the following Technical Specifications also apply for the following reasons:

- 3.8.C, because V-14-35, Emergency Condenser NE01B Condensate Return Valve, is inoperable.

- 3.8.E, because V-14-33, Steam Inlet Valve to 'B' Emergency Condenser, is inoperable.

IMPLEMENTATION OF CONFIGURATION CHANGES

SECTION ***PAGE NUMBER***

1.0 PURPOSE 4

2.0 ENGINEERING EVALS 4

3.0 DETEREMINATION OF CONFIGURATION CHANGE TYPE 4

3.1 APPLICATION OF SUB-PROCESS NOT COVERED BY CC-AA-103 5

3.2 APPLICATION OF SUB-PROCESS COVERED BY CC-AA-103 6

4.0 CONFIGURATION CHANGE PACKAGE 7

4.1 PREPARATION OF CONFIGURATION CHANGE PACKAGE 7

4.1.1 PACKAGE CREATION 7
4.1.2 DESIGN CONSIDERATIONS AND IMPACTS 10
4.1.2.1 PROBLEM DEFINITION 10
4.1.2.2 SCOPE 10
4.1.3 SAFEGUARDS INFORMATION 11
4.1.4 DESIGN CLASSIFICATION 11
4.1.5 DISCUSSIONS WITH DESIGN ENGINEERING MANAGER 11
4.1.5.1 ENGINEERING CONTENT AND ACTIVITIES 12
4.1.5.2 ENGINEERING REVIEWS 12
4.1.5.3 WALKDOWN CONSIDERATIONS 12
4.1.5.4 CONFIGURATION CHANGE SCOPE MEETING 13
4.1.5.5 OPERATIONS BRIEFING 13

4.2 PREPARATION OF DCP FOR REVIEW 13

4.2.1 DESIGN TEAM 13
4.2.2 WALKDOWN 15
4.2.3 PREPARE / UPDATE / PERFORM ENGINEERING DELIVERABLES 15
4.2.3.1 DESIGN ATTRIBUTES 15
4.2.3.2 ANALYSES, CALCULATIONS, COMPUTATIONS, AND ENGINEERING EVALUATIONS 15
4.2.3.3 COMPONENT RECORD LIST 15
4.2.3.4 ITEMS TO BE COMPLETED AFTER CONFIGURATION CHANGE PACKAGECLOSURE 18
4.2.4 ADVANCE WORK AUTHORIZATION 18
4.2.5 PREPARE MATERIALS LIST 19
4.2.6 TESTING CRITERIA AND REQUIREMENTS 22
4.2.7 CONFIGURATION SCOPE MEETING 22

4.2.8 NEW / REVISED DOCUMENTS, DRAWINGS, AND SKETCHES..... 22
4.2.9 SINGLE POINT VULNERABILITY AND LATENT FAILURE REVIEWS.....23
4.2.10 AFFECTED DOCUMENTS LIST.....23
4.2.11 INTERACTION WITH PENDING CHANGES..... 24
4.2.12 ASME CODE ANI / ANII APPLICABILITY..... 25
4.2.13 CHECKLIST OF CONFIGURATION ACTIVITIES..... 25
4.2.14 EQUIPMENT DATA..... 25
4.2.15 IDENTIFY AFFECTED PROGRAMS.....25
4.2.16 IDENTIFY AFFECTED PROCEDURES..... 25
4.2.17 IDENTIFY TRAINING CHANGES..... 25
4.2.18 SPECIAL INSTRUCTIONS..... 25
4.2.19 TRACKING OF AFFECTED CONFIGURATION AND PROGRAM CHANGES 26
4.2.20 10CFR50.59 REVIEWS..... 26
4.2.21 ASSEMBLE THE CONFIGURATION PACKAGE.....27
4.2.21.1 DOCUMENTATION OF INTERDISCIPLINARY INPUT.....27
4.2.21.2 ADMINISTRATIVE TASKS..... 27
4.2.21.3 CONFIGURATION CHANGE PACKAGE ATTACHMENTS..... 29
4.2.21.4 DOCUMENTATION OF INSTALLER AND USER WALKDOWNS.....30
4.2.22 REVIEW OF PACKAGE BY AFFECTED DEPARTMENTS..... 30

4.3 CONFIGURATION CHANGE PACKAGE ISSUANCE..... 31

4.3.1 SIGN CONFIGURATION CHANGE PACKAGE.....31
4.3.2 DESIGN REVIEW..... 31
4.3.2.1 PERFORMING A DESIGN VERIFICATION.....31
4.3.2.1.1 ADDITIONAL DESIGN VERIFICATION METHODS.....33
4.3.2.1.2 EXPECTATIONS OF THE VERIFIER..... 34
4.3.2.2 DOCUMENTATION OF DESIGN VERIFICATION..... 35
4.3.3 ENGINEERING CONTRACT DESIGN ENGINEER.....35
4.3.4 CONFIGURATION CHANGE PACKAGE REVIEW AND APPROVAL..... 35
4.3.5 EQAB REVIEW..... 36
4.3.6 RESOLUTION OF EQAB FINDINGS..... 38
4.3.7 SITE ENGINEERING DIRECTOR APPROVAL..... 38
4.3.8 PORC / PRG REVIEW..... 38
4.3.9 PLANT MANAGER APPROVAL..... 38
4.3.10 REGULATORY ASSURANCE APPROVAL..... 38
4.3.11 CONFIGURATION CHANGE PACKAGE APPROVAL..... 39

4.4 CONFIGURATION CHANGE INSTALLATION..... 39

4.4.1 PLANNING CONFIGURATION CHANGE PACKAGE IMPLEMENTATION.... 39
4.4.2 CONFIGURATION CHANGE IMPLEMENTATION..... 40

4.5 TESTING..... 40

4.6 OPERATIONS ACCEPTANCE..... 40

4.7 COMPLETION OF CONFIGURATION CHANGE ACTIVITIES.....41

4.8 CONFIGURATION CHANGE PACKAGE REVISION AND CANCELLATION... 42

4.8.1 CONFIGURATION CHANGE PACKAGE REVISION..... 42
4.8.2 CANCELLED CONFIGURATION CHANGE PACKAGES..... 42

5 PIMS PROCESSING OF ECR'S..... 43

5.1 CREATING AN ECR..... 43
5.2 CREATING AN ECR REVISION..... 44

ATTACHMENT 1 PROPER USE OF PIMS EVALS..... 45

ATTACHMENT 2 SETPOINT CHANGES..... 47

ATTACHMENT 3 COMMERCIAL CHANGE SCREENING CRITERIA..... 49

ATTACHMENT 4 EQUIVALENT CHANGE SCREENING CRITERIA..... 54

ATTACHMENT 5 DESIGN MARGIN..... 55

ATTACHMENT 6 CHANGE ANALYSIS..... 67

ATTACHMENT 7 MODELS / BOUNDARY CONDITIONS..... 75

ATTACHMENT 8 OPERATING EXPERIENCE..... 94

ATTACHMENT 9 CRITICAL CHARACTERISTICS..... 97

ATTACHMENT 10 SPECIAL INSTALLATION INSTRUCTIONS..... 104

ATTACHMENT 11 SUPPLEMENTAL DESIGN REVIEW QUESTIONS..... 107

ATTACHMENT 12 SECONDARY INFORMATION..... 110

ATTACHMENT 13 RISK AND BARRIER REVIEW..... 114

1.0 PURPOSE

The purpose of this manual is to provide management expectations, suggested methods, and commonly accepted engineering and business practices for accurately and efficiently performing configuration changes. This manual is designed to complement the requirements contained in CC-AA-103, "Configuration Change Control," and CC-AA-104, "Document Change Requests." Where the requirements of CC-AA-103 and CC-AA-104 are self-explanatory, no additional guidance is provided in this manual.

NOTE: In general, this manual is organized to provide guidance based on the steps of the Design Change sub-process, as specified in CC-AA-103. It is understood that not all of the steps in the Design Change sub-process apply to the other sub-processes (e.g., the Commercial Change process or the Document Change Request process).

2.0 ENGINEERING EVALUATIONS

Requests to Engineering may not always require a configuration change as described in this manual. Technical evaluations or consulting may be provided outside of the configuration change process. Examples of this are:

- Technical evaluations dispositioned in accordance with CC-AA-309-101.
- Other requests for engineering support made via a PIMS A/R Evaluation

Attachment 1 of this manual provides additional guidance for proper use of PIMS Evaluations.

3.0 DETERMINATION OF APPLICABLE CONFIGURATION CHANGE TYPE
(CC-AA-103 Step 4.2) (CC-AA-104, Step 4.2)

CC-AA-103 contains direction for performing Commercial Changes, Equivalent Changes, and Design Changes.

CC-AA-104 contains direction for processing Administrative Change Document Change Requests (DCRs), Commercial Change DCRs, Equivalent Change DCRs, and Design Change DCRs.

If field work is required, then use CC-AA-103. If no field work is required, then use CC-AA-104.

In addition, there are types of configuration changes, such as the Pre-Engineered Change, that are not governed by either CC-AA-103 or CC-AA-104. The information provided in CC-AA-103 and its associated attachments direct the user to the sub-process and associated procedure or procedure section that is appropriate for the configuration change.

Nonconformances are processed per process description CC-AA-11. A nonconformance is entered into the corrective action process per LS-AA-125 and an operability evaluation is made using LS-AA-105. The operability evaluation includes identification of corrective actions and the time frame for completing the corrective actions. If a configuration change is required as

one of the corrective actions, the change is made per the established configuration change procedures. A nonconformance does not impose any unique considerations related to development of the configuration change package. Since a repair disposition requires field work, use CC-AA-103 for the permanent disposition and use CC-AA-112 for an interim (temporary) disposition. Since a use-as-is disposition does not require field work, use CC-AA-104.

For information related to the applicability of setpoint changes to the configuration change process, refer to Attachment 2 of this manual.

3.1 APPLICABILITY OF CONFIGURATION CHANGE SUB-PROCESSES (not covered by CC-AA-103) (CC-AA-103, Step 4.2.1)

DOCUMENT CHANGE REQUEST (refer to CC-AA-104)

A label change is not considered field work since it does not require a clearance, work order, or testing. Therefore, a label change can be handled as a document change request. Issue a PIMS evaluation to have the label changed in the field.

TEMPORARY CONFIGURATION CHANGE (refer to CC-AA-112)

Temporary configuration changes include what used to be interim dispositions of nonconforming conditions at Peach Bottom and Limerick.

DESIGN ANALYSES

No additional guidance.

PRE-ENGINEERED CHANGE

Pre-Engineered Changes are alternatives to existing physical configurations in the facility that have been previously evaluated by Engineering and determined to meet or exceed installation and functional requirements of the System, Structure, or Component (SSC).

An example of a Pre-Engineered Solution would be the removal of a tubing support that was interfering with maintenance activities. The engineer would authorize support removal provided minimum support requirements were met as documented in an approved specification (e.g., spec NE-007 at PBAPS, SP 9000-44-001 at OC).

Another example of a Pre-Engineered Solution is the use of 125-1 evaluations at Oyster Creek and TMI. These evaluations historically prepared in accordance with OC/TMI Conduct of Engineering Principles provide alternate parts evaluations and resolution of installation issues.

Since the technical evaluation required to support a Pre-Engineered Change is contained in an approved specification or procedure, there is no need to generate a configuration change package (i.e., ECR) prior to performing the field work. Knowledgeable craft can refer to the associated work order for direction. Engineering may be required to provide a technical interpretation of the specification or procedure. Interpretations and clarifications are

documented as an Engineering Technical Evaluation (refer to CC-AA-309-101) in an A/R evaluation.

Although a Pre-Engineered Change may provide a bounding technical evaluation, a Document Change Request may be required to assure configuration control. For example, removal of a piping support, while performed in accordance with a Maintenance procedure or specification, may require update of a controlled drawing, processed by a Document Change Request. Another use of a Document Change Request is to ensure that any required procedure or program updates are performed. If the revised document is required to support plant operation, the Document Change Request needs to be approved prior to installation.

Pre-Engineered Changes are implemented using the appropriate work control process (e.g., work orders, A/Rs).

ITEM EQUIVALENCY CHANGE (refer to SM-AA-300)

An Item Equivalency Change is a hardware change that does not change the performance of the design bases functions of the associated component or system, and does not change the item's or its applicable interfaces' compliance with the plant licensing bases. Item equivalency evaluations are performed in accordance with Procurement Engineering procedures through evaluation of form, fit, and function of replacement components or their piece parts. Refer to the applicable governing procedure for additional details.

3.2 APPLICABILITY OF CONFIGURATION CHANGE SUB-PROCESSES (that are covered by CC-AA-103) (CC-AA-103, Steps 4.2.2, 4.2.3, and 4.2.4)

COMMERCIAL CHANGE (refer to CC-AA-103, Section 4.3)

A Commercial Change implements a configuration change with fewer controls than a Design Change.

Commercial Changes are developed and implemented using codes, standards, and good engineering practices typically applied during the design of systems, structures, and components outside of nuclear jurisdiction. This includes use of national standards such as fire code, Uniform Building Code, National Electric Code, local and state standards, and other utility design standards.

An example of a Commercial Change would be alterations of the water treatment building lighting configuration (e.g., addition of fixtures).

Since the scope of a commercial change may vary from a simple change, such as the installation of a water fountain in the main control room, to a complex change, such as constructing a new warehouse building outside the protected area, the level of documentation and design team involvement will vary.

EQUIVALENT CHANGE (refer to CC-AA-103, Section 4.4)

No additional guidance.

DESIGN CHANGE (refer to CC-AA-103, Section 4.5)

A Design Change is any other type of configuration change that cannot be processed as a pre-engineered change, a temporary configuration change, a design analysis, an item equivalency, a document change request, a commercial change, or an equivalent change.

An example of a Design Change is the installation of a blank flange downstream of an inoperable Primary Containment Isolation Valve (PCIV). Since the blank flange provides the design bases isolation function differently than the PCIV, this type of configuration change is considered a Design Change.

It is intended that configuration changes with several portions be processed using "cafeteria style" execution, whereby the depth of documentation and review would be commensurate with the portion of the design change being considered. The following examples illustrate this concept:

Example 1, adding a water cooler to a safety related block wall. The portions of the configuration change related to changes to the block wall would be treated as a design change, whereas the portions related to the water cooler could be treated as a commercial change.

Example 2, adding non-safety related vibration monitors to a safety-related system. The portions of the configuration change related to seismic impact on the piping and components would be treated as a design change, whereas the portions related to the function of the vibration monitoring system could be treated as a commercial change.

Example 3, adding a non-safety related indicator to a safety-related control room panel. The portions of the configuration change related to the seismic analysis of the panel and human factors would be treated as a design change, whereas the portions related to the function of the indicator could be treated as a commercial change.

4.0 CONFIGURATION CHANGE PACKAGE

4.1 PREPARATION OF CONFIGURATION CHANGE PACKAGES (CC-AA-103, Step 4.5)

4.1.1. PACKAGE CREATION (CC-AA-104, Step 4.1.1)

~~Create an Action Request (A/R) in PIMS for the configuration change, if one has not already been created.~~

- Use a CM-ECR type A/R for all configuration changes that involve field work.
- Use an EC-ECR type A/R for all other configuration changes. This includes engineering work involved with developing pre-engineered changes that will be implemented by other A/Rs.

An Engineering Change Request (ECR) needs to be created in PIMS. If not already created by the Responsible Engineer's supervisor or the Initiator's supervisor, the Responsible

Engineer creates the ECR in PIMS. See Section 5.1 of this manual for guidance on creating an ECR. If all affected documents associated with an Administrative Change type of Document Change Request are issued in final form (i.e., no as-building required), it is acceptable to use an EVAL in lieu of an ECR.

The types of ECRs to choose from are as follows:

CONFIGURATION CHANGE SUB-PROCESS	ECR TYPE	CONTROLLING PROCEDURE
Item Equivalency	IEC	SM-AA-300
Administrative Change	ACP	CC-AA-104
Commercial Change	CCP	CC-AA-103, CC-AA-104
Equivalent Change	ECP	CC-AA-103, CC-AA-104
Design Change	DCP	CC-AA-103, CC-AA-104
Temporary Change	TCP	CC-AA-112

Note: Since a nonconformance does not receive any special treatment per the configuration change procedures, the NCR type of ECR is obsolete and is no longer used. If the A/R is a CM NCR type, create a child CM ECR or EC ECR type A/R to allow creating the proper type of ECR.

A configuration change may contain portions that meet the screening criteria for a less rigorous type of change package. In this case, it is acceptable to either use one ECR for the whole change or use multiple ECRs, one for each portion of the change. For example, some portions of a configuration change may be covered under a Design Change, while other portions meet the Commercial Change screening criteria. Either create a DCP type ECR and a CCP type to support the different portions of the configuration change, or create one DCP type ECR that contains limited attributes for the commercial change portion.

Use additional ECRs as necessary to divide the design work to support design, installation, and testing. Examples include:

- Unit specific changes to common documents, such as the UFSAR, Technical Specifications, and DBDs.
- Partial installation, acceptance testing, and as-building.
- Use by different installing organizations, such as contractors, Maintenance, and NMD.

There is basic information included in a configuration change package to assure that the users of the package understand what is being done and why it is being done. Although the procedure requires several items to be addressed in different contexts at different times, there is no need to repeat the same information in several places in the package. Therefore, a suggested general format for disposition of a configuration change is as follows:

TEMPORARY CONFIGURATION CHANGES

1. PURPOSE

1.1. This procedure establishes the requirements for the design, review, control, documentation, and tracking of Temporary Configuration Change Packages (TCCP) to ensure operator awareness, conformance with design intent and operability requirements, and preservation of plant and personnel safety.

1.2. This procedure provides the criteria for determining the required characteristics for temporary changes controlled by task specific procedures rather than formal TCCPs.

1.3. This procedure provides clarification on types of temporary changes that do not require formal TCCPs by using temporary changes categorized as Exclusions (defined below).

1.4. This procedure provides the means to track the temporary changes in direct support of maintenance activities that use Maintenance Rule 10CFR50.65 (a)(4) category to eliminate the need for 50.59 reviews (refer to LS-AA-104). It provides the administrative control needed to support the collective efforts by Maintenance, Work Control, Systems Engineering, Operations, and Engineering to assure that such changes are removed at the completion of the maintenance activity being supported, or prior to 90 days from the date of installation, whichever comes first, or a 50.59 review is performed prior to 90 days from the date of installation.

1.5. This procedure also satisfies specific commitments referenced within the body of the procedure and identified in Section 6.1.

1.6. This procedure should not be used to provide administrative controls for placing functions in tripped conditions described in Improved Technical Specifications action statements. **(CM-6.1.5.15)**

2. TERMS AND DEFINITIONS

2.1. **Compensatory Actions** – Refer to LS-AA-104 and the Exelon 50.59 Resource Manual.

2.2. **Critical Control Room Drawings (CCRDs)** – A term used for the drawings identified by Operations that must be available in the Control Room to reflect the current configuration in the plant. In MWROG, this list is a station specific list put together by Operations. In MAROG, the As-Built drawing category "A1" are considered the CCRDs.

2.3. **Engineered Test Point** – A test connection identified by Engineering on design documents or controlled database as an acceptable connection for connecting

measurement and test equipment for taking data while performing various approved tests for the purpose of troubleshooting, performance monitoring, or other test activities appropriately approved for site use.

2.4. **Exclusions** – Certain temporary changes that support various plant activities are not required to adhere to the requirements of this procedure. This category of change is called Exclusions. A list and description of Exclusions is provided in Attachment 2. **(CM-6.1.2.1)**

2.5. **Interdiscipline Review** – A review performed by the Engineering technical disciplines that had input, or supported development of the TCCP. Refer to the responsibility description in CC-AA-103.

2.6. **Maintenance Rule (a)(4) Temporary Changes (MR90s)** – Temporary changes in direct support of maintenance activities that meet the criteria for Maintenance Rule (a)(4) applicability as described in LS-AA-104 and the Exelon 50.59 Resource Manual. These changes are required to be removed when the maintenance activity is completed or within 90 days of the temporary change installation, whichever comes first, or a 50.59 review is performed prior to 90 days from the date of installation.

2.7. **Operations Temporary Change Tracking Log** – A log used by Operations to track formal TCCPs developed under this procedure and 10CFR50.65 Maintenance Rule (a)(4) temporary changes that have not had a 50.59 review based on the 90 day limited duration of their installation (refer to LS-AA-104).

2.8. **Pre-Engineered Temporary Configuration Changes** – Proceduralized temporary configuration changes that have been developed for repetitive application at the station. These temporary configuration changes are used by the Installer with the provision that the Installer stay within the Engineered Criteria provided in the procedure, and follow the process defined therein to implement the change. The Installer is able to use the procedure to develop the detailed work instructions for the work package that will install the temporary configuration change. In so doing, the temporary configuration change is implemented without a formal TCCP.

2.9. **Procedurally Controlled Temporary Changes** – A temporary change to the physical plant controlled by a plant procedure or a Maintenance Work Order developed to address a specific type of temporary change and contains the minimum content and the review and approval required in Attachment 1 of this procedure.

2.10. **Temporary Configuration Change** – A modification to physical configuration that is <u>not</u> a permanent change to the plant.

2.11. **Temporary Configuration Change Package (TCCP)** - A formal package of information controlled under this procedure and presented to the Installer as the deliverable for use in implementing and eventual removal of a planned temporary configuration change to the fit, form or function of any SSC that does not conform to approved design drawings or other approved design documents.

2.12. **Temporary Configuration Change Tag** - A numbered tag with the following minimum information on the tag: **TCCP** Number, either the temporary Configuration Change tag location, or Component ID of the item that the tag is attached to, and the Installer's signature. **(CM 6.1.6.5)**

2.13. **Troubleshooting** – A maintenance activity that involves the detection, diagnosis and repair of faulty equipment. Refer to the Maintenance and Work Control procedure(s) for Troubleshooting.

3. RESPONSIBILITIES

3.1. **Senior Manager Design Engineering (SMDE)** - The SMDE is the person responsible for the Design Engineering department. The SMDE must approve any TCCP extensions.

3.2. **Peer Reviewer** – Assigned by Engineering Management to perform a design review of non-safety related, non-ASME code TCCPs. This review provides the level of confidence in the technical adequacy of the TCCP needed to support implementation, use, and subsequent removal of the TCCP and is not required to be independent of the design development effort..

3.3. **Independent Design Reviewer** – Assigned by Engineering Management and performs an independent detailed design review of the Safety Related and Augmented Quality TCCPs, including calculations, drawings, and other deliverables to the extent needed to ensure that design requirements and deliverables identified by use of Reference 6.2 and this procedure are complete and correct. An Independent Design Reviewer performs the reviews required by Reference 6.10.

3.4. **Design Engineering Manager (DEM)** – The DEM is the First Line Manager in charge of a particular engineering technical discipline. The DEM assures her/his department provides the necessary input to the TCCP. The DEM is also responsible for assuring that the Interdiscipline Review is performed for the TCCP. The DEM responsible for issuing the TCCP provides the Engineering approval for issuance of the TCCP.

3.5. **Maintenance Manager** - The Maintenance Manager is responsible for ensuring that maintenance/contractor personnel are familiar with this procedure and that the TCCP is installed and removed per the approved TCCP requirements.

3.6. **Maintenance Planner** – Responsible for planning work and requesting assistance, when needed, from Engineering when a TCCP or Technical Evaluation is needed to support a Maintenance activity.

3.7. **Installer Personnel** – Personnel responsible for installing and removing TCCPs in accordance with this procedure and details in Installer department procedures. Note: The Installer is responsible for obtaining TCCP Tags.

3.8. **Site Engineering** - The organization having design authority for all TCCPs.

3.9. **Site Engineering Director (SED)** - The SED has overall responsibility for the Temporary Configuration Change Program.

3.10. **Operations Shift Manager** - The Shift Manager has overall responsibility for control of TCCPs during the assigned shift.

3.11. **Operations Supervisor** – This position is "Operations Unit Supervisor" in MWROG and "Operations Control Room Supervisor" in the MAROG. The Operations Supervisor performs many of the activities and approvals required of Operations during the processing of a TCCP. This responsibility includes entering temporary changes into the Temp Change Log, controlling TCCP tag numbers and tags, authorizing installation and removal of TCCPs, reviewing Temp Change Log each shift for administrative control over active TCCPs, and ensuring necessary shift personnel are aware of the installed TCCPs and their effect on plant operation.

3.12. **Plant Operations Review Committee (PORC)** - PORC, is responsible for reviewing TCCPs when required by PORC procedure, Reference 6.6.

3.13. **Requestor** – The individual who initiates the request for a TCCP is the requestor.

3.14. **Responsible Engineer (RE)** – The preparer who develops and issues the Temporary Configuration Change. The RE is responsible for temporary change development, review of various design considerations in accordance with Reference 6.2, obtaining the necessary Interfacing Discipline, Design Reviewer, System Manager, PORC, and Operations reviews and approvals.

3.15. **System Manager (SM)** - The SM performs a review of the TCCP. Based on the complexity of the TCCP, the SM determines whether or not SM presence is needed at the time of TCCP removal. During the SM system walkdowns (per Reference 6.11) the status of active TCCPs is reviewed. The SM is also responsible for reviewing the limited duration requirements for temporary changes installed per Maintenance Rule (a)(4) and informing Maintenance/Work Control of the need to remove the change before the 90 day duration is reached, or a 50.59 review is performed prior to 90 days from the date of installation. SM is also responsible for ensuring that TCCP Extended Installation Justification is approved.

3.16. **Temporary Configuration Change Coordinator** – Engineering person who coordinates the TCCP program at the administrative level and provides monthly status information on TCCPs and MR90 temporary changes with controlled duration limits, such as Measurement and Test Equipment and Maintenance Rule (a)(4) temporary changes.

4. MAIN BODY

4.1. Processing a TCCP

4.1.1. **DETERMINE** if a TCCP is Required **(CM 6.1.1.8)**

1. **If** a temporary configuration change is listed as an Exclusion in Attachment 2, **then** exit this procedure. **(CM 6.1.2.1, 6.1.6.6)**

2. **If** the temporary configuration change can be made via an approved procedure meeting the requirements identified in Attachment 1 **then** exit this procedure.

3. **If** an inoperable system and/or component needs to become operable (inservice, standby) or placed in operation with a temporary change installed, or the controlling procedure is being closed with a temporary change installed, **then** the temporary change must be converted to a Temporary Configuration Change per this procedure.

4. A TCCP may be required to support an urgent plant condition. An urgent plant condition is a situation that can cause equipment damage, or injury to company personnel. Urgent plant conditions should be addressed by use of lineup changes in system operation wherever possible. AT THE SHIFT MANAGER'S DISCRETION, an alteration may be installed provided the activity is screened for 50.59 applicability and concurrence is obtained from the Site Engineering Director/designee prior to implementing the alteration. **COMPLETE** the TCCP paperwork required to document the alteration by the next business day. In light of the "urgent plant condition" **INFORM** PORC of the TCCP regardless of the need for PORC approval of the TCCP.

4.1.2. **DEVELOP** the TCCP

1. **DETERMINE** applicable design consideration impacts using the Design Impact Screening procedure, CC-AA-102 and the Design Attribute Review (DAR), Attachment 1A in CC-AA-102. **(CM-6.1.1.6, 6.1.4.9, 6.1.4.13, 6.1.5.14, 6.1.5.16)**

2. **PERFORM** walkdowns if needed using CC-AA-106-1001 as guidance.

3. **DEVELOP** TCCP Installation / Removal Instructions and Test Requirements. **(CM-6.1.3.1, 6.1.6.8)**

   A. **DESCRIBE** the TCCP and reason for its implementation.

   B. **ADDRESS** applicable considerations from the DAR (CC-AA-102 Attachment 1A) in the appropriate section(s).

   C. **If** the TCCP is going to be in place through the next required periodic UFSAR update cycle, **then DETERMINE** if a UFSAR Change is required per Regulatory Assurance procedural requirements.

   D. **ADDRESS** the applicable TCCP Precautions and Limitations (see Attachment 3).

   E. **CONTACT** Operations to confirm any Mode change restrictions and any required compensatory actions prior to MODE changes that are applicable to this TCCP. **(CM-6.1.1.2, 6.1.5.5)**

F. **IDENTIFY** Administrative Controls
   - Mode Restrictions (List the Modes the TCCP must be removed prior to entering)
   - Compensatory Actions required prior to entering particular modes
   - Caution Card and Label use and placement
   - new or changed surveillance requirements
   - inclusion of TCCP on Operator rounds
   - specific conditions that must exist prior to installing or using this TCCP
   - electrical circuits that will be energized during TCCP installation

G. **PROVIDE** Installation Details for use by Installer. Include details on where the installation will take place. (For example: building column lines, elevations, room numbers to clarify what areas are involved.) Expand this section as needed. **(CM-6.1.1.3)**

H. **IDENTIFY** known material requirements.

   1. **If** the TCCP involves a Vendor Skid installation, **then IDENTIFY** the Vendor name, representative, and phone number for accessibility.

   2. **USE** materials for TCCP installation and design restoration that have the same quality as that of the original components being altered or **PROVIDE** evaluation and justification. **(CM-6.1.1.1, 6.1.2.2, and 6.1.2.4)**

   3. **IDENTIFY** required Temporary Labels.

I. **IDENTIFY** Post Installation Testing required before TCCP can be used for its intended purpose (Operations Acceptance). **IDENTIFY** testing requirements that are separate documents in the TCCP. **USE** Reference 6.7 as applicable.

J. **DESCRIBE** the conditions that must be satisfied allow removal of the TCCP

K. **PROVIDE** Removal Details for use by Installer. **(CM-6.1.1.3)**

L. **IDENTIFY** Post Removal Testing required before TCCP can be considered removed (Operations Acceptance). **IDENTIFY** testing requirements that are separate documents in the TCCP. **USE** Reference 6.7 as applicable.

4. **IDENTIFY** special/specific TCCP Tag requirements.

5. **IDENTIFY** the Affected Documents.

A. **CHECK** for Pending Revisions. **(CM-6.1.2.3)**

B. **OBTAIN** most current revision of affected drawing. **(CM-6.1.2.3)**

C. **RECORD** drawing numbers used in the development of TCCP including, when applicable, P&IDs, C&IDs, electrical and vendor drawings. The referenced drawings should be of sufficient detail so that specific installation points may be reviewed. **(CM-6.1.2.3)**

6. **PERFORM** the 10CFR 50.59 review to the extent required by LS-AA-104. **(CM-6.1.5.9, 6.1.7.1)**

   A. A 50.59 review may not be required if the TCCP is being done in direct support of a maintenance activity and fits the Maintenance Rule (a)(4) requirements. **If** this option is used, **then ENSURE** that the removal date of the TCCP is either immediately after the completion of the maintenance activity, or less than 90 days from the date of installation, whichever comes first.

7. **LIST** the TCCP deliverables. (i.e. Contents of TCCP)

8. **OBTAIN** interdisciplinary reviews from affected engineering disciplines.

9. **VERIFY** that the change is technically justifiable and is safe.

10. **SIGN** the TCCP as Preparer.

4.1.3. **REVIEW** the TCCP **(CM 6.1.5.2, 6.1.5.6, 6.1.6.7)**

1. **REVIEW** and **APPROVE** the testing requirements specified in TCCP. [SM]

2. **REVIEW** and **APPROVE** the TCCP. [Independent Design Reviewer for Safety Related and Augmented Quality TCCPs, Peer Reviewer for Non-Safety Related TCCPs]

3. **When** the TCCP is acceptable, **then SIGN** the TCCP. [Independent Design Reviewer for Safety Related and Augmented Quality TCCPs, Peer Reviewer for Non-Safety Related TCCPs]

4. **DETERMINE** Plant Operations Review Committee (PORC) review or PORC committee member review requirements per Reference 6.6.

   A. **If** PORC is required, **then RECORD** the date of PORC Meeting Notes approval by PORC Chairman and OBTAIN Plant Manager's approval.

4.1.4. **APPROVE** the TCCP [DEM]

4.1.5. **ISSUE** the TCCP

1. **GIVE** a complete copy of the TCCP to Records Management (for retention) **(CM 6.1.6.3, 6.1.6.4)**.

2. **GIVE** a complete copy of the TCCP to the TCCP Coordinator and the Maintenance Planner.

3. **GIVE** a complete copy of theTCCP to Operations Management **(CM 6.1.6.3, 6.1.6.4)**.

4.1.6. **PREPARE** work package(s) for Installation and Removal of the TCCP in accordance with applicable Maintenance procedures. [Maintenance Planner]

4.1.7. **AUTHORIZE** Installation of TCCP [Operations]

1. **ENSURE** that the Administrative Controls, including Mode Restriction considerations are in place. [Operations Supervisor]

CAUTION
VERIFY that there is awareness of any electrical circuits energized during TCCP installation.

2. **If** the TCCP does not have a screening or 50.59 evaluation based on its planned removal at the completion of the maintenance activity it supports or within 90 days of TCCP installation, whichever comes first, **then CONFIRM** the removal date for the TCCP is within 90 days of the installation date, or sooner.

3. **CONFIRM** that TCCP Tag List has been updated to include Sequence Number, Location and Description of tags. [Operations Supervisor]

4. **UPDATE** the following in the TCCP Tracking Log. [Operations Supervisor]
   - TCCP Number
   - Unit affected
   - Description
   - Is this an MR90 TCCP? (Y/N)
   - Responsible Engineer
   - Requesting Department
   - Expected Removal Date
   - Date Authorization for Installation was given
   - Mod Restrictions/Compensatory Measures

NOTE: Prior to installing a Maintenance Rule (a)(4) temporary change, the Installing Department will bring the Work Package to Operations for Review and Approval (per their

Work Execution procedure). Depending on how individual Pre-Engineered temporary changes are procedurally addressed, there may not be a separate TCCP. In these cases, all information for the temporary change implementation, removal, and configuration restoration is within the work package. The process to be followed by Operations is described in Step below.

5. **If** the Installer has provided a MR90 temporary change work package for approval that does not have a TCCP Number, **then ENTER** the Work Order Number and other information required for the TCCP Tracking Log before approving the work package for implementation.

6. **PROVIDE** required procedure changes prior to installation completion so Operations Management can review the information at the time of installation. **(CM-6.1.2.3)**

7. **AUTHORIZE** installation W/O.

4.1.8. **INSTALL** the TCCP

1. **INFORM** the SM and TCCP Coordinator/RE that installation is authorized to begin. [Installer] **(CM-6.1.1.4)**

2. **DETERMINE** need to be present at work site location for installation and/or removal. [SM]

3. **EXECUTE** work per applicable Maintenance procedures. [Installer]

NOTE: Do not place Tags on components or areas that could cause functional problems. Specifically, do not place tags inside the primary containment. Place Tags on the outside of electrical cabinets where specific components affected by the TCCP are located to assure that the tags do not interfere with component operation. When tag placement has been restricted as discussed above, identify the restriction(s) in the TCCP Tag List.

4. **VERIFY** proper installation of the Temporary Configuration Change with an independent verification by a second person, or a functional test which conclusively proves the proper installation of the Temporary Configuration Change.

5. **WHEN** the TCCP has been installed and installation verification/testing is acceptable, **COMPLETE** and **AFFIX** the TCCP tags/cards. [Installer] **(CM 6.1.4.4, 6.1.6.5)**

6. **If** verification/testing is not acceptable, then **INFORM** Operations and **CONTACT** Engineering for resolution.

7. **ENTER** tag installation status in the TCCP Tag List. [Installer]

NOTE: Installation and Testing status of the TCCP is done by updating the Work Order status in the electronic database as part of the Installer procedural requirements.

8. **RETURN** the TCCP to Operations and **NOTIFY** the Operations Supervisor that the TCCP is installed.[Installer]

9. **NOTIFY** the TCCP Coordinator/RE that the TCCP is installed and tested. [Installer]

4.1.9. **ACCEPT** Installation of TCCP [Operations] **(CM 6.1.6.2)**

1. **ENSURE** that affected drawings defined by Operations as necessary for the Control Room (CCRDs) reflect the TCCP installation. This may be accomplish by attaching a mark-up to the affected CCRD with the revised area of the drawing clouded and providing the TCCP Number and Revision on the modified drawing.

2. **CONFIRM** the following:
   - Installation W/O activities/tasks are complete, including tests.
   - Procedures changes are in place.
   - TCCP Tags are hung and TCCP Tag List is updated with Installer Initial and Date.
   - Administrative Controls described in TCCP Instructions are in place.
   - Required Training is complete.

3. **UPDATE** the TCCP Tracking Log with the installed date.

4. **ACCEPT** the W/O(s) and/or W/O activity(s). [Operations Supervisor]

4.1.10. **AUTHORIZE** Removal of TCCP [Operations]

1. **NOTIFY** the responsible SM that the TCCP removal is imminent and that SM **CONCURRENCE** is therefore needed. [Installer] **(CM-6.1.2.9)**

2. **CONFIRM** concurrence from affected departments to discontinue the TCCP **and PROVIDE** concurrence that TCCP is ready for removal [SM]:

3. **REVIEW** the TCCP Removal Work Package and, if acceptable, **AUTHORIZE** TCCP removal work to begin. [Ops Supervisor]

4.1.11. **REMOVE** the TCCP [Installer]

1. **EXECUTE** removal work per applicable Maintenance procedures.

2. **VERIFY** proper removal of the Temporary Configuration Change with an independent verification by a second person, or a functional test which conclusively proves the proper removal of the Temporary Configuration Change.

3. **If** post removal verification/testing is not acceptable, **then INFORM** Operations and **CONTACT** Engineering for resolution.

4. **UPDATE** the TCCP Tag List for tag removal status.

5. **RETURN** the TCCP and tags to the Operations Supervisor and update TCCP Tag List with Date Removed. **(CM 6.1.6.3, 6.1.6.4)**

6. **INFORM** the Operations Supervisor of the completion of TCCP removal.

4.1.12. **ACCEPT** Removal of TCCP [Operations] **(CM 6.1.6.3, 6.1.6.4)**

1. **CONFIRM** the following:
   - Control Room Drawings have been changed to show the restored design configuration.
   - All removal and restoration W/O activities/tasks are complete, including tests.
   - Procedure changes for TCCP have been removed.
   - Administrative controls associated with the TCCP have been removed.

2. **UPDATE** the TCCP Tracking Log with the Removal Date.

3. **DISCARD** TCCP Tags.

4. If training is required, then **CONFIRM** that the Training Department has been notified of TCCP removal.

5. **ACCEPT** the W/O(s) and/or W/O activity(s). [Operations Supervisor]

4.1.13. **CLOSE** the TCCP

1. **PERFORM** any additional TCCP Post-Removal Activities and **UPDATE** the electronic database system, accordingly to show the TCCP has been removed. [TCCP Coordinator/RE] **(CM-6.1.2.9)**

2. **FORWARD** the completed TCCP to Records Management for retention. [TCCP Coordinator]

4.2. <u>Periodic Review of installed TCCPs</u>

4.2.1. ALARA concerns may prohibit walkdowns and/or verification of some TCCPs during Plant Engineering walkdowns. Document these conditions and route to the TCCP coordinator.

4.2.2. Engineering Review of Issued and Installed TCCPs and MR90 Temporary Changes

1. **PERFORM** a monthly review of the electronic database and applicable logs (i.e., TCCP Tracking log), that includes the following topics, to identify TCCPs and MR90 temporary changes that are no longer needed. [TCCP Coordinator/SM] **(CM-6.1.1.5)**
   - TCCP No./Rev or W/O No.
   - System and "MR90" if it applies
   - Unit, Description, Purpose
   - Removal Mech.
   - Op Auth. Date
   - Expected Removal Date or <= 90 days from installation date for MR90 temp changes
   - Action Plan for Removal
   - Responsibility for Action
   - Concerns and Resolutions

2. **PROVIDE** action plan for removal or extension and current expected completion date. [SM]

NOTE: The initially identified Work Order removal date is based on the installation Work Order date. However, the original installation date may change. Consequently, during the monthly reviews, the scheduled removal dates for Maintenance Rule (a)(4) temporary changes must be confirmed to be within the 90 day duration limit.

3. **CONFIRM** that the Work Order for removal of the Maintenance Rule (a)(4) temporary changes will occur prior to 90 days from the date of installation or by the completion of the maintenance activity being supported. [SM]

4. **DETERMINE** the continued need for TCCPs that are expected to remain installed past their scheduled removal dates. [SM]

4.2.3. Operations Review of Installed TCCPs

1. **DURING** plant startup, **REVIEW** all temp changes on the TCCP Tracking Log prior to MODE change to ensure none need to be removed or require further evaluation.[Shift Manager]

2. **REVIEW** changes to the TCCP Tracking Log each shift as part of the shift turnover per Shift Turnover and Relief requirements. **(CM 6.1.6.2)** [Operations Supervisor]

3. **If** the TCCP Tracking Log is maintained in hard copy form **AND** all TCCPs on a given page are statused as "Removed" (removal date shown), **then FORWARD** the completed TCCP Tracking Log pages to the TCCP Coordinator for final review and disposition. [Operations Supervisor]

4.2.4. Management Review

1. **PROVIDE** monthly status updates to the Station Manager, Operations Manager, Site Engineering Director, Maintenance, and Work Control Managers. [TCCP Coordinator]

2. **INCLUDE** information on quantity of TCCPs installed, quantity of Maintenance Rule (a)(4) temporary changes, duration of installation, and scheduled removals.[TCCP Coordinator]

4.3. Extension of Installed TCCPs

4.3.1. **If** a TCCP is an MR90, **then** the TCCP **cannot** be extended beyond the end of the maintenance activity that it supports. **If** the Maintenance activity is expected to go beyond 90 days, **then PERFORM**, prior to the 90 day limit, a 50.59 review per LS-AA-104. **(CM 6.1.5.1)**

1. Add the 50.59 tracking number to the extension documentation and include a note in the comments section of the Work Order explaining that the TCCP is no longer a MR90. Update the TCC Log and add the new scheduled removal date.

4.3.2. **If** a TCCP, that is not an MR90, is expected to remain installed beyond the expected removal date, **then DETERMINE** the justification for the extended TCCP installation. **(CM-6.1.3.2, CM 6.1.5.1)**

EXAMPLE

Examples of Removal "dates" or milestones are:

- "By or during L1R09 outage"
- Specific calendar dates such as "6/12/00"
- "30 day maximum installation duration".

4.3.3. **If** a TCCP is expected to stay in place throughout the next required periodic UFSAR update cycle, **then DETERMINE** if a UFSAR update is needed per Regulatory Assurance requirements. [SM/Responsible Engineer]

4.3.4. **OBTAIN** SMDE, Operations Management, Plant Manager approvals of the extension and new removal date. [SM] **(CM-6.1.4.1)**

4.3.5. **If** the TCCP will be installed for a duration greater than a Refueling Cycle, then **OBTAIN** the Site Vice President approval. [SM] **(CM-6.1.4.1)**

4.3.6. **UPDATE** the Control Room Copy of the TCCP with documentation of the aforementioned approvals, and **FORWARD** a copy to the TCCP Coordinator prior to the expected removal date. [SM]

4.4. Conversion of TCCPs to Permanent Configuration Changes

4.4.1. **If** a TCCP is to become a permanent design change, then **USE** CC-AA-103. [Preparer]

4.4.2. **AFTER** acceptance of the implemented permanent configuration change by Operations:

1. **OBTAIN** the TCCP from Operations. [RE]

2. **INFORM** Operations Management that the TCCP is no longer needed and to update TCCP Tracking Log. **USE** the permanent configuration change Ops Acceptance date as the removal date of the TCCP. [RE]

4.4.3. **CONFIRM** the following:

- Control Room Drawings have been changed to show the converted design configuration.
- All conversion W/Os are complete, including tests.
- Procedure changes for TCCP have been converted.
- Administrative controls associated with the TCCP have been removed.

4.4.4. **CONFIRM** TCCP Tags removed.

4.4.5. If training is required, then **CONFIRM** that the Training Department has been notified of TCCP removal.

4.4.6. **CLOSE** the TCCP

4.5. Revision of TCCPs **(CM 6.1.5.4)**

Note: A temporary "lift" or removal of a TCCP represents a revision to the approved TCCP configuration. If the TCCP removal and subsequent TCCP restoration is **not** done as part of an Operations Clearance, a TCCP Revision is required to evaluate and approve the configuration change.

4.5.1. **IF** the following apply, then **PROCESS** a TCCP Revision:

- the functional intent of a TCCP has been changed, or
- the 50.59 review has undergone a change in technical content, or a new 50.59 is needed (as a result of the 90 day duration limit for MR90 temporary changes)

- additions or deletions to the physical configuration that been made that change the function of the TCCP, or
- process function(s) of the TCCP as shown on the markups or procedures addressing the use of the TCCP have changed, or
- significant changes have been made to testing requirements for installation or removal

4.5.2. **If** a TCCP Revision is required, then **CONTACT** the TCCP Responsible Engineer or TCCP Coordinator.

4.5.3. **If** an original removal date is being extended, **then USE** Section 4.3.

4.5.4. **UPDATE** the TCCP to reflect the changes.

4.5.5. **PROCESS** the revision in accordance with the original TCCP review and approval requirements.

5. DOCUMENTATION

5.1. TCCP

5.2. TCCP Tracking Log

5.3. TCCP Tag List

5.4. TCCP Extension Approval

6. REFERENCES

6.1. Commitments

6.1.1. Braidwood

1. Response to NRC Notice of Violation 456-100-90-00201, perform appropriate design review and determine the suitability of materials prior to installation of safety-related TCCPs. – (4.1.2.3.H.2)

2. 1990 Technical Support Assessment 456-360-90-ET199e, review TCCP for compensatory actions when descending in operating MODE 1990 – (4.1.2.3.E)

3. 1990 Technical Support Assessment 456-360-90-ET199c, specify testing requirements for TCCPs – (4.1.2.3.G, 4.1.2.3.K)

4. DVR 457-200-89-02300, conduct independent review of TCCPs on important systems and have the requester present at installation and removal as determined by the Plant Engineering Manager – (4.1.8.1)

5. 456-400-89-TS.03-01B, monthly review installed TCCPs and tracking log – (4.2.2.1)

6. Response to NRC Notice of Violation 456-100-90-00201, determine the effect of the TCCP on the seismic capability of a Seismic Class I component (4.1.2.1)

7. QAA (CAR 20-91-017A,D), provide a formal method for notifying and requesting Site Engineering Services.

8. Response to PIR 20-2-93-004 to provide a formal method to assist site personnel in screening proposed TCCPs and in determining whether other administrative controls should be utilized – (4.1.1)

6.1.2. Byron

1. BYRON-95-5122, Harpreet Singh to Kurt Kofron, dated Nov. 8, 1995, Exclusions from the TCCP process – (2.4, 4.1.1.1, and Attachment 2)

2. NTS 454-251-87-06200, Material/procedure quality during installation of TCCPs – (4.1.2.3.H.2)

3. NTS 454-251-87-06100, Recording of documents used in TCCP development (4.1.2.5.A, B, &C, 4.1.7.6)

4. NTS 454-251-87-06200, Material/procedure quality during restoration – (4.1.2.3.H.2)

5. Byron Commitment 6-87-0061, Field checking of wiring diagrams - (Attachment 3, Section 9)

6. NTS 454-315-95-00900F, Two train precautionary note - (Attachment 3, Section 12).

7. NTS 455-201-98-CAQS01164, Test Equipment installed on Operable Systems or Components – (Attachment 2 Items 5b and 5c)

8. NTS 454-180-93-00200-03, Proper Installation Jumpers – (Attachment 3, Section 3)

9. NTS 454-251-87-06200, Documentation of TCCP removal – (4.1.10.1, 4.1.13.1)

6.1.3. Dresden

1. NTS# 237-100-96-006VC008, Ensure that post maintenance tests following removal of a TCCP are documented with the TCCP or are otherwise retrievable – (4.1.2.3)

2. NTS# 237-100-94-00310, Subject I.R. 237/249-94003, NRC inspection conducted 2/28/94 through 4/5/94, Improper control of TCCPs – (4.3.2)

3. NTS 249-200-90-02405 Deviation Report 12-3-90-24, CRD Hydraulic Control Unit G-1 freeze seal failure due to personnel error – (Attachment 2)

4. NTS – 237-201-93-015-01F01(Attachment 3, Section 3 and 9)

5. NTS – 237-201-93-035-01F02 (Attachment 3, Section 3 and 9)

6. Discrepancy Record # 89-103 – (Attachment 3, Section 3 and 9)

7. INPO significant event report 40-86, Spent fuel leakage - (Attachment 3, Section 7).

6.1.4. LaSalle

1. NRC Inspection Report 373/374-96-05 Response, dated September 24, 1996 No TCCPs greater than one refueling cycle without concurrence of Site Vice President and Station Manager – (4.2.4, 4.3.5)

2. AIR 373-360-89-001CAT102, Temporary System Changes Installed via the OOS Program Allows Operation of Affected System Without 50.59 Review - (Attachment 1, Item 12)

3. AIR 373-360-89-001CAT104, Post-Installation Testing of Some Temporary System Changes is not Adequately Documented-(Attachment 1, Item 7)

4. AIR 373-360-89-001CAT107, Increased Attention for Station Labeling -(4.1.8.5)

5. AIR 373-355-89-00043, DC Ground Task Force Action Requirements: Procedure Revisions

6. AIR 373-401-80-00202, Administrative Control Program for Plugged Floor Drains (Attachment 2)

7. AIR 373-360-90-ET108, The Number and Duration of Installed Temporary Alterations is not Minimized

8. AIR 373-360-90-ET110, LAP-240-6, Attachment 4, Does Not Address Possible Degradation of Flood Protection Barriers or Increased Potential for Flooding - (Attachment 2)

9. AIR 374-200-90-04302, Review LAPs on Design Changes to Add Guidance on Review of AP & DC Procedures when Adding AC or DC Loads -(4.1.2.1)

10. AIR 373-104-90-00500, Response to Generic Letter 90-05

11. AIR 373-200-91-04101, Revision of LAP-240-6, "Temporary System Changes"

12. AIR 373-352-91-01703, Onsite Nuclear Safety Recommendation to Revise LAP-240-6 to Incorporate Precautions on the Use of Furmanite and to Address the Use of Plastic as a Barrier for Equipment Operability – (Attachment 2)

13. AIR 373-355-90-00023, Control and Maintenance of Fuses and the Fuse List Procedure XAP-0001 -(4.1.2.1)

14. AIR 373-251-91-00158, Special Concerns of Temporary Power Installations vs. Hazards

6.1.5. Clinton Power Station Commitments

1. ATI 400799 – Develop installation duration restrictions (4.3.1, 4.3.2)

2. ATI 400116– Obtain Engineering approval of TCCPs (4.1.3)

3. CR1-92-10-46 – Define temporary changes that are implemented by other processes other than a TCCP (Attachments 1 and 2)

4. CR 1-94-11-48 and CR 1-95-2-40 – Need for controlling TCCP revisions (4.5)

5. CR 1-95-1-14 – Operational restraints need to be included in installation and removal instructions (4.1.2.3.E)

6. CR 1-96-1-13 – Need for Engineering approval of TCCPs (4.1.3)

7. CR 1-96-12-235 – Guidance needed for installing transient equipment/materials (Attachment 3, Section 4)

8. CR 1-96-12-259 – Providing proper guidance on how to revise proceduralized temporary changes (Attachment 1)

9. CR 1-97-5-80 – Requirement for including 50.59 safety evaluation/screening in TCCP (4.1.2.6)

10. CR 1-98-6-319 and 323 – Provide guidance on performing impact assessments and design reviews for TCCPs, proceduralized temporary changes and associated revisions (Attachment 1, Item 1)

11. CR 1-99-12-111 – Clarify guidance on use of M&TE and when a TCCP is or is not required for M&TE installation (Attachment 2, Section 5)

12. CR 2-00-1-8 – Various review requirements for temporary change installation duration extensions (4.3), periodic reviews (4.2), content review of original package and 50.59 (4.1), training (4.1.10), various management reviews (4.2 and 4.3)

13. ATI No. 400641 – Provide control of multi-conductor cables (Attachment 3, Item 13)

14. ATI No. 400848 – Control temporary repairs to ASME III components by reconciliation or NRC Relief Request prior to deviating from code compliance. Pertains to leak repair of Section III components. (4.1.2.1)

15. CR1-89-9-67 – Avoiding use of the temp change procedure as the means for providing administrative controls for placing functions in tripped conditions described in Improved Technical Specification action statements. (1.6, Attachment 3, Item 14)

16. CR1-92-10-58 – Control of Repair/Replacement of ASME III components (4.1.2.1)

6.1.6. MAROG Commitments

1. T00148 – Gagged or disabled relief valves (Attachment 2)

2. T02641 – Annotating drawings affected by Temporary Configuration Changes (4.1.9, 4.2.3.2, , Attachment 1, Item 6)

3. T02030 – Subject Lifted or relocated electrical leads, electrical jumpers, bypass lines or piping jumpers (4.1.5.1, 4.1.5.3, 4.1.11.5, 4.1.12, Attachment 2)

4. T03872 – Control of Original Temp Change Package (4.1.5.1, 4.1.5.3, 4.1.11.5, 4.1.12)

5. T00240 – Temporary Change Tagging Control (2.12, 4.1.8.5)

6. T01933 – Use of Exclusions in lieu of TCCPs (4.1.1.1)

7. T00457 - Temp Plant Alterations (4.1.3)

8. T02508 - Post Mnt Testing (4.1.2.3)

6.1.7. Oyster Creek Commitments

1. LAR 96111.05 – Requires 10CFR50.59 review for all Temporary Configuration Changes (4.1.2.6, Attachment 1-Item 12)

6.2. CC-AA-102, DESIGN INPUT AND CONFIGURATION CHANGE IMPACT SCREENING

6.3. CC-AA-103, CONFIGURATION CHANGE CONTROL

6.4. CC-AA-309, CONTROL OF DESIGN ANALYSES

6.5. LS-AA-104, EXELON 50.59 REVIEW PROCESS

6.6. LS-AA-106, PLANT OPERATIONS REVIEW COMMITTEE

6.7. CC-AA-107, DESIGN CHANGE ACCEPTANCE TESTING CRITERIA

6.8. CC-AA-106-1001, PERFORMANCE OF WALKDOWNS AND CONTROL OF WALKDOWN INFORMATION

6.9. Maintenance Procedure for Maintenance Planning

6.10. Quality Assurance Manual

6.11. System Managers Handbook

6.12. NEI Questions and Answers on 10CFR50.59 and NEI 96-07, Revision 01, Update 3, dated January 11, 2001

6.13. CC-AA-309-101, Engineering Technical Evaluations

7. ATTACHMENTS

7.1. Attachment 1 – Procedurally Controlled Temporary Configuration Changes

7.2. Attachment 2 – TCCPs, Exclusions and Associated Administrative Controls

7.3. Attachment 3 – Temporary Configuration Change Precautions and Limitations

ATTACHMENT 1
Procedurally Controlled Temporary Configuration Changes (CM-6.1.5.3 & 6.1.5.8)
Page 1 of 2

If a temporary configuration change to a Structure, System or Component (SSC) is reviewed and controlled in other processes, or controlled by other procedures associated with a particular process that meets the following screening criteria, **then** a formal TCCP with content described in this procedure is **not** required.

NOTE: Technical Evaluation or Analysis done per Reference 6.4 or 6.13 is an acceptable means to document the technical evaluation of Procedurally Controlled Temporary Configuration Changes.

1. **PROVIDE** a documented technical evaluation, using CC-AA-102, of the procedure or Maintenance Work Order that is being used as a procedural control. Documentation of the approved technical evaluation review must be contained in the procedural review/approval package as an applicable procedure reference, or in the Maintenance Work Order by reference to the document number assigned to the technical evaluation. **(CM-6.1.5.10)**

2. **PROVIDE** requirements for and **OBTAIN** Operations shift management notification and authorization/sign-off when temporary changes are installed and removed.

3. **INCLUDE** documentation of the installation and removal of the temporary change.

4. **INCLUDE** direction for control of temporary changes in direct support of maintenance activities that use limited installation durations described in 10CFR50.65 Maintenance Rule (a)(4) and 10CFR50.59. Refer to LS-AA-104 for governing requirements for Exelon.

5. **INCLUDE** Verification per procedural requirements when the temporary change is installed or removed.

6. With the exception of functional changes already approved within Surveillance Test and Preventative Maintenance procedures, additions or deletions of SSCs identified on Critical Control Room Drawings shall be addressed within the procedure. The procedure will provide instructions for CCRDs markups in the Control Room drawing location(s) and subsequent removal of markups after temporary change is removed.**(CM 6.1.6.2)**

   An acceptable method to do this is to include a sketch of the CCRD change as an attachment to the proceduralized TCCP. Once implemented, a copy of the sketch is stapled to the CCRD in the control room. Once the procedure is exited, the stapled copy of the sketch showing the temporary change is removed.

7. **INCLUDE** Functional testing requirements and performance, as appropriate, when the temporary change has been installed and after the design configuration has been restored (upon removal of the temporary change). **(CM 6.1.4.3)**

8. **INCLUDE** a provision for the transfer of control to this procedure (CC-AA-112) or other administrative controls if the temporary change must stay in place after the installing procedure is exited.

ATTACHMENT 1
Procedurally Controlled Temporary Configuration Changes
Page 2 of 2

9. **INCLUDE** the time frame during which the temporary change may remain installed is under the authority of the procedure. This information (i.e., installation and expected removal dates, applicable plant mode limitations must be included prior to obtaining management approval.)

10. **INCLUDE** tracking controls needed to ensure prompt removal of the temporary change. **CONSIDER** using the TCCP Tracking Log as a sample for determining key information needed for adequate tracking control.

11. **CONSIDER and INCLUDE** as applicable the precautions and limitations identified in Attachment 3.

12. **REVIEW** the procedure in accordance with:

    - "10CFR50.59 Review Process" procedure LS-AA-104 to determine the need for 10CFR50.59 review. **(CM 6.1.4.2, 6.1.7.1)**

    - Plant Operations Review Committee (PORC) procedure, Reference 6.6 to determine PORC applicability.

13. **OBTAIN** Design Engineering concurrence of procedural conformance to above criteria.

ATTACHMENT 2
TCCPs, Exclusions and Associated Administrative Controls (CM 6.1.2.1& CM-6.1.5.3)
Page 1 of 3

Temporary configuration changes are controlled either through TCCPs or through use of procedures that have been pre-engineered. Pre-engineered procedures allow the Installer to place the detailed instructions for implementation, removal and configuration restoration directly into the work package used for performing the work without the need for a TCCP. Pre-engineered procedures are used to control changes that are performed on a regular basis (i.e. repetitive maintenance or repetitive repair) and would benefit from a more specifically detailed process. The criteria for use in developing new pre-engineered procedures is in Attachment 1 of CC-AA-112. If an approved pre-engineered procedure is not available for controlling a specific temporary change, then a TCCP is required. Activities controlled by pre-engineered procedures are therefore considered as "Exclusions".

Each station in Exelon may have pre-engineered procedures in place that are not available at other stations. Additionally, this procedure (CC-AA-112) identifies other Exclusions that have been agreed upon by all stations as activities that can be implemented without TCCPs. These Exclusions are listed in this Attachment. Various temporary changes are identified as Exclusions based on the simplicity of the change, and commonly acknowledged industry practices associated with performing day to day activities within the plant that do not have an impact on plant design based configuration.

Based on the above, the following table is provided to identify activities that typically require a TCCP, and a list of activities that are typically addressed by pre-engineered procedures. The actual determination of whether or not a specific activity can be performed as a TCCP or a pre-engineered activity depends upon what has been specifically approved for use at individual stations.

Controlled and Issued as TCCPs	**Pre-Engineered Activities (See Note 1)**
Temporary Setpoint Changes	Ventilation Dampers out of Normal Position (through Operations abnormal lineup procedure)
Mechanical jumpers (hose, tube, pipe) used as pressurized process flowpaths **(CM 6.1.6.3)**	Temp Lead Shielding
Valve Blocks Not Installed Within an Operations Clearance Boundary	Plant Barriers – includes Fire, Ventilation, Security, Radiation, Flood, High Energy Line Break, and Missile Barriers
Temp Power Feeds (TCCP unless Exclusion Item 6 applies)	Scaffolding mounted or attached to structures
Floor Drains with plugs installed	Procedure CC-AA-404 "Maintenance Specification: Application Selection, Evaluation and Control of Temporary Leak Repairs".
Pipe Supports	**Freeze Seals (CM-6.1.3.3)**
Lifted Leads / Pulled Circuit Boards **(CM 6.1.6.3)**	Rigging
Installed or Removed Filters or Strainer	
Gagged or Disabled Relief Valves **(CM 6.1.6.1)**	
Electrical Jumpers (is Maintenance developing a Maint. Alter. Procedure?) **(CM 6.1.6.3)**	
Disabled Alarm	
Battery Cell Jumpers **(CM 6.1.6.3)**	

ATTACHMENT 2
TCCPs, Exclusions and Associated Administrative Controls (CM 6.1.2.1)
Page 2 of 3

Controlled and Issued as TCCPs	Pre-Engineered Activities (See Note 1)
Temp Heat/Cooling for supplementing equipment heating or cooling requirements	
Scaffolding attached to plant system components or appurtenances	
Line Stops	

Note 1: The temporary changes identified in the "Controlled as Procedural Temporary Changes" may not apply to both Regions (Mid-West, and Mid Atlantic). Confirm the applicability of procedures that address these topics using the site Controlled Documents module.

Exclusions and associated Administrative Control Requirements

1. **Surveillance and Inservice tests** are repetitive in nature and typically controlled through specific station procedures which call for temporary configuration change (i.e., installation of a jumper to conduct a trip and cal test, would not fall under this procedure).
2. If evolution of a permanent modification includes **temporary changes required to support the implementation of the permanent modification**, and has been evaluated as part of permanent modification process, then temporary changes are exempted.
3. **Maintenance activities, replacements, troubleshooting and surveillance functions** that are conducted in accordance with an approved procedure, or Work Orders developed from the requirements of task specific station approved procedures. The physical plant configuration must be within the approved design requirements upon exit from the maintenance activity, replacement, troubleshooting or surveillance, or a TCCP is required to consider the SSC as operable.
4. **SSCs included <u>within</u> an Operations Clearance.**
5. **M&TE equipment** discussed in 5.a and 5.b, below, shall be tagged per station procedures for implementing the change. The Work Order number used for installing the M&TE shall be entered into the TCCP Tracking Log for Operator awareness. Additionally, the M&TE items shall be tracked in the TCCP monthly report for use in periodically review by the SM. **(CM-6.1.5.11)**

   a. A TCCP is not required for Measurement and Test Equipment (M&TE) installed on equipment with engineered test points that meet the following requirements:
      - M&TE does not change the system's design function
      - The system is returned to normal configuration before the end of the current refuel cycle.

   b. A TCCP is not required for M&TE installed for troubleshooting efforts on equipment without engineered test points that meet the following requirements: **(CM-6.1.2.7)**
      - M&TE does not change the system's design function
      - M&TE are installed and controlled in accordance with an approved procedure or work package instructions provided that the temporary change of the equipment is clearly documented.
      - The system is returned to normal configuration 90 days after installation. (based on Reference 6.5 and Reference 6.12)
      - Risk significance has been assessed in accordance with Reference 6.9.

ATTACHMENT 2
TCCPs, Exclusions and Associated Administrative Controls
Page 3 of 3

c. For M&TE installed on equipment without engineered test points that do not meet the requirements of 5.b, above, the installation is to be done as a TCCP. **(CM-6.1.2.7)**

6. **120/480 Volt outlets.** Connection of portable equipment to permanently installed plant power feeds (i.e., electrical receptacles, or welding outlets) is not considered a TCCP, provided that the load requirements of the portable equipment (especially in 480v outlets) do not exceed that load included in the Electrical Load Monitoring System for AC power or provided by the auxiliary power system. Otherwise, a TCCP shall be generated.

7. **Service Air hoses and water drops.** Provided that the cross contamination precaution is adhered to, there is no engineering concern for using any of the Service Air or water drops throughout the plant. Similar to power supplies, this does not comment on the devices being used, or general housekeeping, or potential for leakage.

8. **Hoses connected from system drains and vents to floor drains** as part of an approved procedure(s).

9. **Hoses/tubing, and their connecting fittings, connected from non-safety related sample points** for the purpose of obtaining chemistry samples and routed to drains, that do not affect equipment operation either upstream or downstream of the sample point are not considered TCCPs.

10. **Air Movers (fans and eductors).** These generally use Service Air or 480V power as addressed above. Uses may include local application for personnel or general area cooling while work is being done in the area. Consideration before installation of air movers should include possible "masking" of equipment degradation and the need to consider radiological and ventilation (boundary) concerns. **Air movers that are used to replace/augment a design function of permanent HVAC systems <u>require</u> TCCPs to assure complete evaluation of impact and safety significance of the configuration change.**

ATTACHMENT 3
Temporary Configuration Change Precautions and Limitations
Page 1 of 2

1. Whenever possible, electrical circuits will be de-energized prior to the installation of jumpers or lifting of leads. If the TCCPs must be made with electrical circuits energized, specific approval of the Operations Supervisor is required. Consideration should be given to using fused or switched jumpers. The effects of arcing and electrical noise should also be considered during energized installations. **(CM-6.1.3.6)**

2. Lifted leads will be suitably insulated from other circuits and from ground.

3. Jumpers (not alligator clips or similar devices) installed during installation of the TCCP should be routed (tied off or taped) and/or should be of correct length (no loops or extra hanging wire) to prevent accidental dislodging or removal. Jumpers should also use ring lugs to prevent accidental dislodging or removal. Jumpers and power feeds that have ends which cannot be seen at the same time will have tags/cards at each end. **(CM-6.1.2.8, 6.1.3.4, and 6.1.3.5)**

4. If the proposed activity places portable equipment or hardware into the plant where it can impact/interact with plant SSCs, or circuits and is not controlled by other processes, then contact Engineering to evaluate the impact. Examples that may impact/interact with the plant are items that could cause: **(CM-6.1.3.6 & CM-6.1.5.7)**
    - Falling/Interaction
    - Initiation of a fire
    - Overheat
    - Explosion
    - Impairment of a FP zone
    - Additional loading on electrical circuits
    - Change in airflow or HVAC conditions
    - Change in, or impairment of fluid flows
    - Alteration, impairment, or creation of penetrations
    - Increase in dose, etc.
    - Introduction of foreign material in the drywell or containment that could become LOCA generated debris that may plug ECCS strainers or ECCS sump screens.

5. Do not cross-connect systems that are not specifically designed for cross-connection. When connecting the service air system to other systems which could lead to cross-contamination of the service air system <u>or</u> when connecting the demineralized water system to other systems which could cause contamination of the demineralized water system, appropriate controls shall be used (e.g., check valves) to ensure no backflow of contamination will occur.

6. The use of manually operated valves or manually operated pneumatic pressure regulators to control pressure in lieu of an automatic pressure regulator valve should be a short term alternative.

7. Jumpers or lifted leads should be utilized in lieu of non-conductive blocks to prevent relay contacts from changing state. **(CM-6.1.3.7)**

ATTACHMENT 3
Temporary Configuration Change Precautions and Limitations
Page 2 of 2

8. A TCCP can affect other systems. That effect needs to be evaluated. Conversely, the effect of other systems on the TCCP functions should likewise be evaluated. When appropriate the equipment/components of other systems which could effect the TCCP shall be clearly identified and tagged with TCCP tags/cards.

9. Wiring diagrams should be field checked against the installed wiring, to preclude errors when placing electrical jumpers or lifting leads. **(CM-6.1.2.5, 6.1.3.4, and 6.1.3.5)**

10. When developing the TCCP, consideration should be given to special TCCP installation or removal requirements. For example, a pressurized connection may require additional venting/draining to allow for depressurization before disconnecting the TCCP piping. Electrical connections may also require additional isolation capability beyond normal installation requirements to assure the safety of personnel during TCCP removal.

11. When a TCCP involves venting, draining, or isolating a portion of a piping system, precautions may be necessary to assure that a hydraulic transient or water hammer does not take place during TCCP installation or TCCP removal and subsequent system restoration. Refer to NES MS-01.3 on water hammer prevention for further detail. Also, contact the station water hammer Subject Matter Expert for resolution of any concerns.

12. If two (2) trains are to be tracked by one TCCP, ensure that tabs are marked (Train "A" and Train "B") and placed in the TCCP in order to separate them. **(CM-6.1.2.6)**

13. **[Clinton only Commitment, CM-6.1.5.13]** When multiconductor cables are used, they shall be controlled IAW CPS 1501.02, Appendix N, Control Of Multiconductor Cables.

14. This procedure should not be used to provide administrative controls for placing functions in tripped conditions described in Improved Technical Specifications action statements. **(CM-6.1.5.15)**

AmerGen An Exelon Company	OYSTER CREEK GENERATING STATION PROCEDURE	Number 328
Title **Turbine Building Heating and Ventilation System**	Usage Level **1**	Revision No. 43

5.2 NORMAL OPERATION OF THE TURBINE BLDG HEATING AND VENTILATION SYSTEM

5.2.1 The Turbine Building Heating and Ventilation System is in service in accordance with Section 5.1 of this procedure.

5.2.2 **If** Turbine Building pressure trips actuate,
then both the supply and exhaust fan trips and the interlock must be reset by pushing the reset button on Panel 11R.

5.2.3 **NOTIFY** New Radwaste and Rad Con prior to swapping EF-1-6 for EF-1-7.

5.2.3 **MAINTAIN** a negative pressure in the Turbine Building as indicated by:

(1) T. B. Operating Floor DP indicator DPI-51-0389 next to Panel ER-74
(2) Turbine Building DP indicator DPI-821-0001 (Panel 11R)
OR
backup indicator DPI-821-0003 (in ATC-P-17 panel at stack pad)

5.2.4 **MAINTAIN** the following Turbine Building fan filters differential pressure less than 1.0" W.G.

Filter	Fan
F-1-1	SF-1-7
F-1-4	SF-1-22

5.2.5 **MAINTAIN** a minimum temperature of 50°F in the Turbine Building as indicated by the three temperature indicators on Panel 11R:
- SOUTH AIR TEMP
- ROOF TEMP
- NORTH AIR TEMP

5.2.6 **OPERATE** the four local steam space heaters in the old machine shop (Station Services area) as required via their local controls.

5.2.7 **MAINTAIN** a minimum temperature of 45°F in the Feedwater/Condensate Pump Room as indicated by local thermometers.

5.2.8 **If** Feedwater/Condensate Pump Room temperatures reach 45°F,
then **VERIFY** all dampers on heater bay roof are positioned to fully recirculate air in the Feedwater Pump Room and temperature controller setpoints are 80°F (TC-821-0050 in ATC-P-11).

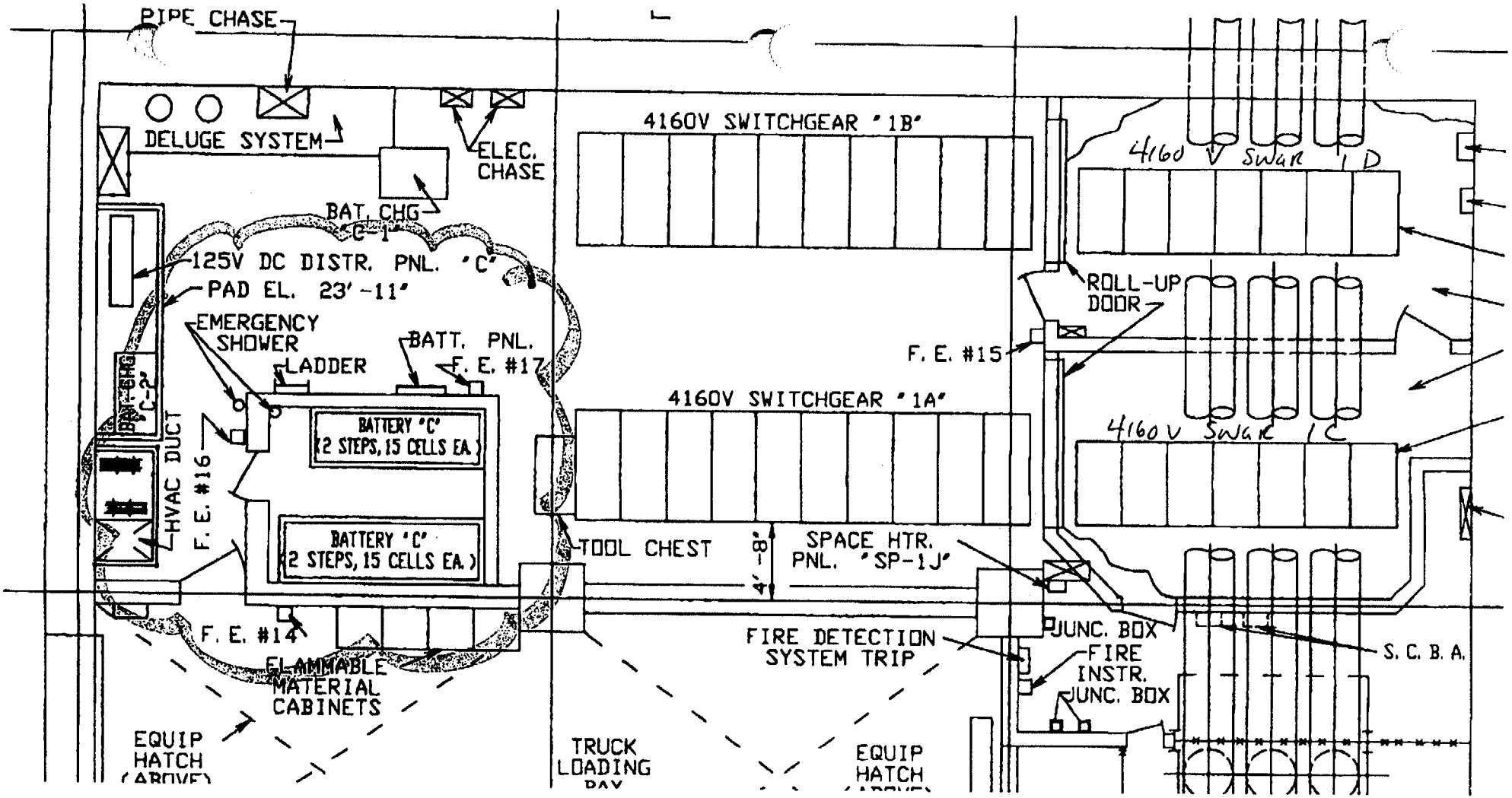

from GU-3E-151-02-003
General Arrangement
Turbine Bldg 23'6"

MAY-11-2004 09:39 1 97% P.02

DCC FILE:20.3014.0008

AmerGen. An Exelon/British Energy Company	OYSTER CREEK GENERATING STATION PROCEDURE	Number 634.2.002
Title Main Station Battery Weekly Surveillance		Revision No. 26
Applicability/Scope Applies to work at Oyster Creek	Usage Level 1	Responsible Department Maintenance Mech/Elec 2410
This document is within QA plan scope 50.59 Reviews Required	X Yes ___ No X Yes ___ No	Effective Date

Prior Revision 25 incorporated the following Temporary Changes:

N/A

This Revision 26 incorporates the following Temporary Changes:

N/A

List of Pages (all pages rev'd to Rev. 26)

1.0 to 13.0
E1-1
E2-1 to E2-4

DCC FILE:20.3014.0008

AmerGen An Exelon/British Energy Company	OYSTER CREEK GENERATING STATION PROCEDURE	Number 634.2.002
Title Main Station Battery Weekly Surveillance		Revision No. 26

ATTACHMENT 634.2.002-2

STATION BATTERY C (A/B/C) WEEKLY DATA SHEET

Prerequisites

3.1 Verify battery being surveilled is on Float Charge. Initial

3.2.1 Persons Performing the Surveillance Test

Flanagan

Christensen

3.2.2

CALIBRATED TEST EQUIPMENT	CONTROL NO.	CAL. DUE DATE
Voltmeter	0002603192	6.10.04
Hydrometer	0002547182	8.18.04
Thermometer	0001357890	4.03.04
Clamp-on Ammeter	0002656430	11.04

DCC FILE:20.3014.0008

AmerGen. An Exelon/British Energy Company	OYSTER CREEK GENERATING STATION PROCEDURE	Number 634.2.002
Title Main Station Battery Weekly Surveillance		Revision No. 26

ATTACHMENT 634.2.002-2
(continued)

STATION BATTERY C (A/B/C) WEEKLY DATA SHEET

6.2.1 Battery Float Voltage 132.7 volts

Surveillance Acceptance Criteria:
≥ 125.4 volts for A or B Battery
≥ 124.2 volts for C Battery

Normal Voltage Range:
130 to 133 for A or B Battery
132 to 135 for C Battery

6.2.2 Pilot Cell number 6

6.2.3 Pilot Cell voltage 2.15 volts

Surveillance Acceptance Criteria:
≥ 2.09 volts for A or B Battery
≥ 2.07 volts for C Battery
< 2.13 requires equalization charge if directed by the System Engineer.

6.2.4 Charger Current 15 amps

6.2.5 Battery Charging Current .1 amps

6.3.1 Ambient Room Temperature

Battery Room A/B NA °F
Battery Room C 67 °F

6.3.3 Temperature of Pilot Cell 71 °F

6.3.4 Specific gravity correction factor NA (NA if using temperature corrected Digital Hydrometer)

6.3.5 Specific gravity correction factor NA (NA if using temperature corrected Digital Hydrometer)

6.4.1 Pilot Cell Specific Gravity measured 1.216

6.4.1 Pilot Cell Specific Gravity measured using 3 level option for C Battery:

NA (Top) NA (Middle) NA (Bottom) ~~1.216~~ NA (Average)

6.4.2 Pilot Cell Specific Gravity corrected for temperature 1.216
(same as 6.4.1 if using a temperature corrected Digital Hydrometer)

6.5.1 Pilot Cell Electrolyte Level -1/8 inch

6.5.2 Pilot Cell Specific Gravity corrected for level ~~1.213~~ N/A

6.5.3 Pilot Cell Specific Gravity corrected for level 1.213

Surveillance Specific Gravity Acceptance Criteria:
≥ 1.190 for Operability
≤ 1.205 requires equalizing charge if directed by System Engineer.

DCC FILE:20.3014.0008

AmerGen. An Exelon/British Energy Company	OYSTER CREEK GENERATING STATION PROCEDURE	Number 634.2.002
Title Main Station Battery Weekly Surveillance		Revision No. 26

ATTACHMENT 634.2.002-2
(continued)

STATION BATTERY C (A/B/C) WEEKLY DATA SHEET

6.6.1 All cell plates covered? ☑ YES ☐ NO Cell #'s if "NO":

6.6.2 Demineralized Water Added? ☐ YES ☑ NO

Cell	Water Added (OZ)		Cell	Water Added (OZ)		Cell	Water Added (OZ)
1			21			41	
2			22			42	
3			23			43	
4			24			44	
5			25			45	
6			26			46	
7			27			47	
8			28			48	
9			29			49	
10			30			50	
11			31			51	
12			32			52	
13			33			53	
14			34			54	
15			35			55	
16			36			56	
17			37			57	
18			38			58	
19			39			59	
20			40			60	

6.7 Cleaning performed: cleaned Batteries

6.8.3 Physical Inspection Completed KF Initials

DCC FILE:20.3014.0008

AmerGen. An Exelon/British Energy Company	OYSTER CREEK GENERATING STATION PROCEDURE	Number 634.2.002
Title Main Station Battery Weekly Surveillance		Revision No. 26

ATTACHMENT 634.2.002-2
(continued)

STATION BATTERY C (A/B/C) WEEKLY DATA SHEET

6.9 OS notified that surveillance testing is complete. Initials

6.12 Equalizing charge required? ☐ YES ☑ NO

Equalizing charge initiated per PM# 73501E

_____ / _____
Date Time Initials

6.13 Completed Surveillance [signature] / 1-27-04
Signature Date

6.14 Make a copy of Data Sheets and forward to DC Systems Engineer Initials

Discrepancy/Comments

None

Action Required:

None

Date	TURB041	TURB043
	4160 A/B Vault Temperature	`C` Battery Room Temperature
12/1/2003 21:40	75	72
12/2/2003 07:59	70	69
12/2/2003 19:49	69	68
12/3/2003 08:14	64	68
12/3/2003 23:40	65	69
12/4/2003 07:51	64	68
12/4/2003 21:01	65	69
12/5/2003 09:51	70	68
12/5/2003 20:59	71	67
12/6/2003 08:38	70	68
12/6/2003 21:58	68	69
12/7/2003 08:26	66	68
12/7/2003 20:00	66	68
12/8/2003 08:51	64	68
12/8/2003 20:34	66	68
12/9/2003 08:40	66	77
12/9/2003 20:33	72	71
12/10/2003 08:54	72	69
12/11/2003 20:05	74	72
12/11/2003 20:12	82	78
12/12/2003 08:23	74	72
12/12/2003 09:15	76	76
12/12/2003 20:38	76	73
12/13/2003 08:12	72	71
12/13/2003 20:05	74	71
12/14/2003 08:29	77	73
12/14/2003 22:32	81	77
12/15/2003 08:18	78	76
12/15/2003 20:15	76	73
12/16/2003 08:05	68	68
12/16/2003 19:59	74	69
12/17/2003 08:45	79	75
12/17/2003 20:02	71	68
12/18/2003 09:00	70	68
12/18/2003 23:39	68	68
12/19/2003 10:22	67	67
12/19/2003 19:09	68	68
12/20/2003 08:25	66	68
12/20/2003 20:16	68	68
12/21/2003 08:32	65	68
12/21/2003 20:37	69	68
12/22/2003 08:10	69	68
12/22/2003 19:55	75	71
12/23/2003 08:20	76	72
12/23/2003 21:10	79	74
12/24/2003 08:49	80	75
12/24/2003 22:39	78	74
12/25/2003 08:14	75	72
12/25/2003 19:54	73	72
12/26/2003 08:50	69	67
12/26/2003 20:22	72	68

12/27/2003 08:47	70	67
12/27/2003 19:52	74	70
12/28/2003 08:34	68	68
12/28/2003 20:07	74	70
12/29/2003 08:25	71	69
12/29/2003 22:07	76	72
12/30/2003 08:26	79	74
12/30/2003 21:07	76	74
12/31/2003 09:23	72	69
12/31/2003 21:07	74	71
1/1/2004 09:19	73	70
1/1/2004 21:33	73	70
1/2/2004 08:06	64	70
1/2/2004 20:28	76	72
1/3/2004 07:51	77	72
1/3/2004 20:40	76	72
1/4/2004 08:16	72	72
1/4/2004 21:06	68	68
1/5/2004 08:09	67	68
1/5/2004 20:25	67	68
1/6/2004 08:52	67	68
1/6/2004 09:34	70	68
1/6/2004 20:45	66	67
1/7/2004 08:25	68	68
1/7/2004 20:21	63	68
1/8/2004 08:02	66	68
1/9/2004 09:59	65	68
1/9/2004 20:59	61	68
1/10/2004 08:08	52	66
1/10/2004 11:22	52	66
1/10/2004 21:02	54	67
1/11/2004 10:49	53	65
1/11/2004 20:43	59	66
1/12/2004 08:55	63	69
1/12/2004 20:25	67	67
1/13/2004 08:54	69	67
1/13/2004 20:31	68	66
1/14/2004 09:13	59	67
1/14/2004 20:38	60	66
1/15/2004 08:31	60	67
1/16/2004 00:10	54	66
1/16/2004 08:38	53	65
1/16/2004 20:52	59	66
1/17/2004 08:46	58	67
1/17/2004 21:03	63	67
1/18/2004 09:49	65	66
1/18/2004 20:22	66	66
1/19/2004 08:57	63	67
1/19/2004 22:11	62	66
1/20/2004 09:40	61	67
1/20/2004 21:21	62	68
1/21/2004 08:20	60	68
1/21/2004 21:21	60	66
1/22/2004 08:15	62	66
1/22/2004 20:33	67	67

1/23/2004 08:36	60	67
1/23/2004 20:49	58	67
1/24/2004 09:28	58	67
1/24/2004 22:29	58	67
1/25/2004 09:38	57	67
1/25/2004 19:38	58	67
1/26/2004 08:40	59	68
1/26/2004 20:36	62	67
1/27/2004 08:16	64	66
1/27/2004 20:09	66	67
1/28/2004 08:18	62	67
1/28/2004 20:33	63	67
1/29/2004 08:25	61	66
1/30/2004 01:01	61	66
1/30/2004 08:38	60	67
1/30/2004 20:30	60	67
1/31/2004 09:53	58	67
1/31/2004 21:41	60	67
2/1/2004 09:13	58	67
2/1/2004 21:31	61	68
2/2/2004 09:34	60	67
2/2/2004 19:58	64	66
2/3/2004 08:52	66	66
2/3/2004 22:25	70	66
2/4/2004 08:30	69	66
2/4/2004 21:06	68	67
2/5/2004 08:06	68	66
2/5/2004 21:11	68	66
2/6/2004 09:24	70	68
2/6/2004 22:05	72	67
2/7/2004 09:31	74	67
2/7/2004 20:22	68	67
2/8/2004 08:17	67	67
2/8/2004 20:38	66	68
2/9/2004 08:10	66	68
2/9/2004 21:20	68	68
2/10/2004 08:27	68	68
2/10/2004 20:01	71	68
2/11/2004 09:13	67	68
2/11/2004 20:47	67	68
2/12/2004 08:24	67	67
2/12/2004 22:56	67	68
2/13/2004 09:42	67	68
2/13/2004 20:52	68	68
2/14/2004 08:33	67	68
2/14/2004 21:40	68	67
2/15/2004 08:42	67	67
2/15/2004 20:26	67	67
2/16/2004 08:42	61	68
2/16/2004 20:27	66	68
2/17/2004 08:55	63	70
2/17/2004 20:30	66	70
2/18/2004 08:48	67	71
2/18/2004 21:28	67	70
2/19/2004 09:01	68	70

2/19/2004 20:30	70	71
2/20/2004 08:37	68	71
2/20/2004 21:31	71	71
2/21/2004 11:49	70	70
2/21/2004 22:25	72	71
2/22/2004 08:34	70	70
2/22/2004 20:30	70	70
2/23/2004 09:00	68	70
2/23/2004 23:04	70	71
2/24/2004 08:09	68	70
2/24/2004 20:51	69	70
2/25/2004 08:33	58	71
2/25/2004 20:38	60	72
2/26/2004 09:00	56	70
2/26/2004 20:25	59	72
2/27/2004 08:28	59	72
2/27/2004 20:46	60	72
2/28/2004 08:14	56	70
2/28/2004 20:02	65	71
2/29/2004 09:14	65	71
2/29/2004 20:34	68	71
3/1/2004 08:47	67	70

4) PP DC-D, DC-E and MCC DC-1 connect to buses A or B through automatic bus transfer switches

g. Locations:

1) 125V DC distribution center C, C battery and associated equipment - Turbine Building mezzanine level in the 4160 V switchgear room

LO-F

Q: Why are safety related power supplies physically separated?
A: Physical separation is required for reliability. In case of fire, only one power supply is affected.

2) 125V DC distribution centers A and B, batteries A and B, and associated equipment – A/B Battery Room (MOB-2)

h. Ventilation:

1) Both battery rooms have forced ventilation for atmosphere control to maintain temperature and prevent buildup of hydrogen gas concentrations.

Ref. Proc 331, 340.1

2) (A&B Battery) Battery capacity is diminished at temperatures below 77°F. Capacity at ≥60°F is acceptable due to available reserve. Accelerated loss of battery life occurs above 100°F. Battery damage may occur at 120°F. A&B Battery must be declared inoperable if A/B Battery Room temperature cannot be maintained >60°F <u>or</u> if temperature is >120°F for more than 24 hours.

3) (C Battery) normal battery room temp should be between 60°-100°F. C battery must be declared inoperable if C Battery Room temperature cannot be maintained ≥50°F <u>or</u> is >120°F for more than 24 hours.

Ref. Proc. 340.3, 328.1

2. System Configuration 24/48 VDC

LO-C
Show Figure 5

a. Each subsystem A (B) consists of the following:

1) 24 volt batteries (2)

2) 24 volt battery chargers (2)

3) Power Panel

The 24 VDC system batteries, chargers, and power panels are located in the lower cable spreading room

b. Each subsystem is comprised of two 24 volt batteries connected in series to form a three-wire system of plus or minus 24 volts line to common or 48 volts line to line.

c. Charger power is supplied by IP-4 or IP-4a.

Vital AC Review

QUESTION #SRO-12

At noon on April 1, 2004 the plant is at 80% power with three reactor recirc pumps operating (NG01-A, C and E). **NO** LCOs are in effect at this time. At 12:05 PM the following conditions occur on the AC distribution system:

- The following alarms annunciate:
  - MN BRKR 1B TRIP
  - MN BRKR 1B 86 LKOUT TRIP
  - BUS 1B UV
  - S1B BRKR TRIP
  - S1B BRKR OL TRIP/BRKR PERM OPN
- 4160V BUS 1B voltmeter is reading downscale
- 4160V BUS 1A voltmeter is reading 4160 volts
- EDG No. 2 has started and has energized 4160V Bus 1D
- Security reports that Startup Transformer SB deluge system is discharging on the transformer.
- All other switchyard equipment is available for use.

The operators quickly respond to the 1B Bus alarms and indications (using OPS-3024.10a) and stabilize the plant within the design capability of the remaining energized systems and components. All applicable Technical Specification ACTION statements are satisfied.

Answer the following:
What is the maximum power level sustainable with the AC distribution configuration as it exists at 12:05 PM?
How long can the conditions existing at 12:05 PM be allowed to continue?

A. The plant would have scrammed from the transient. The existing conditions can be maintained indefinitely.

B. The plant could be run at approximately 33% power. The existing conditions can be maintained for 7 days.

C. The plant could be run at approximately 50% power. The existing conditions can be maintained for 7 days.

D. The plant could be run at approximately 33% power. The reactor must be placed in the COLD SHUTDOWN CONDITION.

ANSWER: B

Question SRO 12: Oyster Creek's position

The stated initial plant conditions cannot be met at Oyster Creek. ABN-2, Recirculation System Failures (revision 0), which gives operator direction to respond to a tripped recirc pump which results in three recirc pumps operating after the trip and Procedure 202.1, Power Operation (revision 77), which contains direction to secure one of the recirc pumps with only four pumps initially operating cover this condition. In each case, the operator is directed to get final recirc pump speed below 33 Hz, to ensure no NPSH issues with the operating pumps. The final pump speed of <33 Hz will result in total core flow of approximately 7.5 E4 GPM (which equals ~ 65% power).

In the previous revision of ABN-2, if a recirc pump trip resulted in three loop operation, the operator was directed to immediately reduce recirc pump speed to less than 33 Hz. If this was done from initial power levels of 100%, a power to flow scram would have occurred when recirc flow dropped below 7.68 E4 GPM. At 7.68 E4 GPM, the flow biased scram setpoint takes a prompt drop from approximately 88% to approximately 65%.

Because of this possibility, the procedures were changed to accomplish the recirc flow reduction in three distinct steps. The first step is to reduce recirc flow to 8.5 E4 GPM (top of the buffer zone.) Once that is accomplished, reactor power is reduced to less than 55% by insertion of CRAM rods. Once power is below 55%, flow can then be reduced further to meet the requirement of pump speed less than 33 Hz.

The stem of the question indicates a loss of Bus 1B. This bus loss will result in the loss of "B" and "C" Reactor Feed Pumps, as well as "B" and "C" Condensate Pumps.

Considering the question with the given plant conditions, the stated transient **will** result in a reactor scram, either due to a loss of sufficient feedwater flow causing an automatic scram on reactor low water level, or a manual scram due to expected operator actions of ABN-17, Feedwater System Abnormal Conditions. These expected operator actions require a manual scram if a multiple feed or condensate pump trip occurs.

While the first part of suggested answer "A" is a correct statement (saying the plant would have scrammed from the transient), the second part of the statement is NOT true. The plant must be cooled down to a cold shutdown condition if the loss of the startup transformer lasts for longer than 7 days by Tech Spec section 3.7 dealing with AC power sources.

Answers "B", "C", and "D" are not correct because the plant will have scrammed.

Therefore, there is no correct answer for this question, and the question should be deleted.

Oyster Creek recommendation: Delete this question.

References: ABN-17, Feedwater System Abnormal Conditions, section 3.3 pg. 12 (sent previously)

Technical Specifications, section 3.7 (sent previously)
ABN-2, Recirculation System Failures
Procedure 202.1, Power Operation

D. **RESTORE and MAINTAIN** RPV level 155"-165". [ ]

E. **DIAGNOSE** the cause of the failure in accordance with section 3.3 of this procedure. [ ]

3.3 Loss of Feed/Feed Flow Abnormalities

A. Feed Pump Trip

PERFORM a rapid power reduction as directed by the Unit Supervisor.

B. Condensate Pump Trip

PERFORM a rapid power reduction as directed by the Unit Supervisor.

C. Multiple Feed Pumps Trip

1) **SCRAM** the reactor **and EXECUTE** ABN-1. [ ]

D. Multiple Condensate Pumps Trip

1) **SCRAM** the reactor **and EXECUTE** ABN-1. [ ]

E. Feed Flow Abnormalities

1) **CHECK** feed pump and associated valves lined up correctly. [ ]

2) **If** the block valve(s) are misaligned as indicated by:

- Individual feedwater flow in the 'A' **or** 'C' string unbalanced.
- BLOCK VLV TROUBLE annunciators in alarm (J-6-d (f)).

3.7 AUXILIARY ELECTRICAL POWER

Applicability: Applies to the OPERATING status of the auxiliary electrical power supply.

Objective: To assure the OPERABILITY of the auxiliary electrical power supply.

Specifications:

A. The reactor shall not be made critical unless all of the following requirements are satisfied:

1. The following buses or panels energized.

   a. 4160 volt buses 1C and 1D in the turbine building switchgear room.

   b. 460 volt buses 1A2, 1B2, 1A21, 1B21 vital MCC 1A2 and 1B2 in the reactor building switchgear room: 1A3 and 1B3 at the intake structure; 1A21A, 1B21A, 1A21B, and 1B21B and vital MCC 1AB2 on 23'6" elevation in the reactor building; 1A24 and 1B24 at the stack.

   c. 208/120 volt panels 3, 4, 4A, 4B, 4C and VACP-1 in the reactor building switchgear room.

   d. 120 volt protection panel 1 and 2 in the cable room.

   e. 125 volt DC distribution centers C and B, and panel D, Panel DC-F, isolation valve motor control center DC-1 and 125V DC motor control center DC-2.

   f. 24 volt D.C. power panels A and B in the cable room.

2. One 230 KV line is fully operational and switch gear and both startup transformers are energized to carry power to the station 4160 volt AC buses and carry power to or away from the plant.

3. An additional source of power consisting of one of the following is in service connected to feed the appropriate plant 4160 V bus or buses:

   a. A 69 KV line fully operational.

   b. A 34.5 KV line fully operational.

4. Station batteries B and C and an associated battery charger are OPERABLE. Switchgear control power for 4160 volt bus 1D and 460 volt buses 1B2 and 1B3 are provided by battery B. Switchgear control power for 4160 volt bus 1C and 460 volt buses 1A2 and 1A3 are provided by battery C.

5. Bus tie breakers ED and EC are in the open position.

B. The reactor shall be PLACED IN the COLD SHUTDOWN CONDITION if the availability of power falls below that required by Specification A above, except that

1. The reactor may remain in operation for a period

not to exceed 7 days if a startup transformer is out of service. None of the engineered safety feature equipment fed by the remaining transformer may be out of service.

2. The reactor may remain in operation for a period not to exceed 7 days if 125 VDC Motor Control Center DC-2 is out of service, provided the requirements of Specification 3.8 are met.

C. Standby Diesel Generators

1. The reactor shall not be made critical unless both diesel generators are operable and capable of feeding their designated 4160 volt buses.

2. If one diesel generator becomes inoperable during power operation, repairs shall be initiated immediately and the other diesel shall be operated at least one hour every 24 hours at greater than 80% rated load until repairs are completed. The reactor may remain in operation for a period not to exceed 7 days if a diesel generator is out of service. During the repair period none of the engineered safety features normally fed by the operational diesel generator may be out of service or the reactor shall be placed in the cold shutdown condition. If a diesel is made inoperable for biennial inspection, the testing and engineered safety feature requirements described above must be met.

3. If both diesel generators become inoperable during power operation, the reactor shall be placed in the cold shutdown condition.

4. For the diesel generators to be considered operable:

A) There shall be a minimum of 14,000 gallons of diesel fuel in the standby diesel generator fuel tank,

OR

B) To facilitate inspection, repair, or replacement of equipment which would require full or partial draining of the standby diesel generator fuel tank, the following conditions must be met:

1) There shall be a minimum of 14,000 gallons of fuel oil contained in temporary tanker trucks, connected and aligned to the diesel generator fill station.

Prior Revision 0 incorporated the following Temporary Changes:

N/A

This Revision 0 incorporates the following Temporary Changes:

N/A

List of Pages

1.0 to 21.0

RECIRCULATION SYSTEM ABNORMALITIES

1.0 APPLICABILITY

Provide directions for responding to the trip of one **or** more Reactor Recirculation Pumps **or** a recirculation speed controller malfunction.

Event	Section	Page
Single Recirculation Pump Trip	3.1	6.0
Multiple Recirculation Pump Trips	3.2	9.0
Speed Controller Malfunctions	3.3	11.0

2.0 INDICATIONS

Pump(s) Trip

2.1 Annunciators

Engraving	Location	Setpoint
DRV MOT BRKR TRIP		Breaker Open
Pump A	E-1-c	
Pump B	E-1-e	
Pump C	F-1-a	
Pump D	F-1-c	
Pump E	F-1-e	

Engraving	Location	Setpoint
DRV MOT BRKR LOCKOUT		Lockout relay 86A tripped
Pump A Pump B Pump C Pump D Pump E	E-2-c E-2-e F-2-a F-2-c F-2-e	
MG OL		>192 amps
Pump A Pump B Pump C Pump D Pump E	E-3-c E-3-e F-3-a F-3-c F-3-e	
Pump ΔP LO (trip active only during startup sequence)		≤10 psid
Pump A Pump B Pump C Pump D Pump E	E-1-d E-1-f F-1-b F-1-d F-1-f	

2.2 Plant Parameters

Pump(s) Trip

Parameter	Location	Change
MG Set Frequency	3F	lowering
MG Set Motor Amps	3F	lowering
Generator Amps, Kilovolts	3F	lowering
Pump Flow	3F	lower, then rise due to reverse flow
Total Recirc Flow:		
Recorder	3F	lower
Indicator	4F	lower
Core ΔP	3F	lower
Drive Motor Breaker OFF light	3F	lit
FCS/RFCS alarm	5F/6F	
Pump ΔP	3F	lower, then rise due to reverse flow

Recirculation Speed Controller Malfunction

2.3 Annunciators - None

2.4 Plant Parameters

NOTE: Values of the following parameters may either rise (for a malfunction that causes recirculation flow to raise or lower (for a malfunction which may cause recirculation flow to become less).	
Plant Parameters	Locations
MG frequency	3F
MG SET MOTOR AMPS	3F
GENERATOR AMPS, KILOVOLTS, KILOWATTS	3F
Recirculation loop flow	3F
Total recirc flow	
Recorder	3F
Indicator	4F
Plant Parameters	Locations
CORE ΔP	3F
Reactor pressure	5F/6F
Reactor Power	4F
Main generator MW	8F
Feedwater flow	5F/6F
Steam flow	5F/6F

2.5 Other indications

1. DCC X/Y Message on DCC X/Y CRTs and on PCS.

3.0 OPERATOR ACTIONS

If while executing this procedure an entry condition for an Emergency Operating Procedure occurs,

then **EXECUTE** this procedure concurrently with the appropriate EOP.

3.1 Single Recirculation Pump Trip

1. **If** 3 recirculation loops were in service when a pump trips,

   then **PERFORM** the following:

   A. **SCRAM** the reactor **and** enter ABN-1. [ ]

   B. **CONFIRM** operating recirculation pump speed at 20 to 30 Hz. [ ]

   C. **CONFIRM** open the DISCH BYPASS valve for the tripped pump. [ ]

   D. **CLOSE** the DISCHARGE valve for the tripped pump. [ ]

   E. **CONTINUE** at Step 3.1.2.C. [ ]

2. **If** 4 **or** 5 recirculation loops were operating when a pump trips,

   then **PERFORM** the following:

   A. **CONFIRM** open the DISCH BYPASS valve for the tripped pump. [ ]

   B. **CLOSE** the DISCHARGE valve for the tripped pump. [ ]

   C. **CONFIRM** the DISCHARGE valve for the tripped pump closes in approximately 2 minutes. [ ]

NOTE: Step 3.1.2.D may be performed concurrently with Steps 3.1.2.E through 3.1.2.H.

D. **If** the DISCHARGE valve can **not** be closed,

then **PERFORM** the following:

1. **CLOSE** the pump SUCTION valve. [ ]

2. **CLOSE** the DISCHARGE valve using Attachment ABN-2-1. [ ]

3. **If** Discharge valve closure is successful

   then **REOPEN** the affected pump suction valve to place the loop in an **IDLE** condition. [ ]

NOTE: IDLE loop configuration:

–DISCHARGE valve CLOSED

–DISCHARGE BYPASS valve OPEN

–SUCTION valve OPEN

ISOLATED loop configuration:

–DISCHARGE valve CLOSED

–SUCTION valve CLOSED

–DISCHARGE BYPASS valve CLOSED

4. **If** **neither** the SUCTION **nor** the DISCHARGE valves can be shut within 1 hour,

   then **REFER** to the requirements of Technical Specifications 3.3.F. [ ]

CAUTION

Prolonged operation of Reactor Recirculation pumps above 33 Hz while in 3-Loop operation can cause pump damage.

E. **If** 3 loops are in operation following the recirc pump trip,

then **PERFORM** the following:

1. **If** the Exclusion Region has been entered,

   then **EXIT** the Exclusion Region by raising pump speed to a maximum of 33 HZ **and/or** inserting the CRAM array to lower power to <25%. [ ]

2. **If** total recirc flow >8.5 E4 gpm,

   then **LOWER** total recirc flow to 8.5 E4 gpm. [ ]

3. **If** recirc pump speed >33 Hz,

   then **REDUCE** the remaining recirc pumps to <33Hz as follows: [ ]

   a. **LOWER** reactor power to approximately 55% using the CRAM array, **or** as directed by Reactor Engineering. [ ]

   b. **LOWER** recirc pump speed to <33 Hz. [ ]

F. **VERIFY** the plotted point on the Power Operation Curve. [ ]

1. **If** operating in the Buffer Region **or** the Exclusion Region of the Power Operations Curve,

   then **TAKE** action in accordance with the requirements of Procedure 202.1. [ ]

2. **REFER** to Technical Specifications Sections 3.3.F., 3.10.A. [ ]

G. **CONFIRM** at least one of the RECIRC PUMP SUCTION TEMPS indicators is selected to an operating loop. [ ]

H. **MONITOR** the following parameters for indication of Fuel Element Failure:

- Off-Gas Activity [ ]
- Main Steam Line Radiation [ ]
- Reactor Coolant Activity [ ]

I. **NOTIFY** the System Owner/Dispatcher of power limitations. [ ]

J. **If** power changed by ≥289.5 MWth in one hour,

   then **NOTIFY** Chemistry to sample the reactor coolant in accordance with Technical Specification 3.6.A.4. [ ]

K. **NOTIFY** Reactor Engineering. [ ]

3.2 Multiple Recirculation Pumps Trip

1. **SCRAM** the reactor **and ENTER** ABN-1, Reactor Scram. [ ]

2. **CONFIRM** operating Recirculation Pump speed reduced to 20 to 30 Hz. [ ]

3. **If** Any Recirculation pumps are operating,

   then **PERFORM** the following:

   A. **CONFIRM** open the DISCH BYPASS valves for the tripped pumps. [ ]

   B. **CLOSE** the DISCHARGE valves for the tripped pumps. [ ]

   C. **If** a DISCHARGE valve for any of the affected pumps can **not** be closed,

      then **PERFORM** the following

      1) **CLOSE** the pump SUCTION valve [ ]

      2) **CLOSE** the DISCHARGE valve using Attachment ABN-2-1. [ ]

4. **PERFORM** one of the following for temperature indication:

   A. **If** any Recirculation Pumps are operating,

      then **CONFIRM** at least one of the RECIRC PUMP TEMPS indicators is selected to an operating loop. [ ]

   B. **If** **no** Recirculation Pumps are operating,

      then **SELECT** an unisolated loop for temperature monitoring. [ ]

CAUTION

The restarting of a Recirculation Pump after a trip of all pumps from power operation can sweep away sub-cooled water in the lower head region. This is prohibited by station procedures as it can result in unacceptable thermal stresses in the stub tube area. Ref. GE SIL 251, Control of RPV Bottom Head Temperatures.

C. **If** all operating Recirculation Pumps tripped **or** were manually tripped,

then **do not START** any Recirculation Pump until the reactor has been depressurized to atmospheric conditions. [ ]

3.3 Speed Controller Malfunctions

1. **If** a scoop tube lockup occurs,

then **REFER** to Procedure 301.2, Reactor Recirculation System. [ ]

2. **If** one recirc pump is erratic (oscillating, step change, etc.),

then **PERFORM** the following:

A. **PLACE** the speed control for the affected pump in MAN. [ ]

B. Manually **CONTROL** recirc flow in accordance with Procedure 301.2, Reactor Recirculation System **and EQUALIZE** flow through the operating loops. [ ]

NOTE:	A licensed operator is required to perform the next step.

C. **If** speed control is **not** regained

and power fluctuations are less than ±2.3% (APRMs)

or 15 MWe peak to peak,

then **PERFORM** the following:

1. **CONTROL** the pump using local manual control in accordance with Procedure 301.2 [ ]

2. **EQUALIZE** flow through the operating loops. [ ]

D. **If** speed control is **not** regained in steps A or C above,

and power fluctuations are greater than approximately ±2.3% (APRMs)

or 15 MWe peak to peak,

then **PERFORM** the following:

1. **TRIP** the affected pump [ ]

2. **GO TO** step 3.1 of this procedure, Single Recirculation Pump Trip. [ ]

E. **CONFIRM** power operation in accordance with the requirements of Procedure 202.1, Power Operation. [ ]

F. **NOTIFY** reactor engineering of the event. [ ]

G. **DIAGNOSE** the cause of the malfunction in accordance with Attachment ABN-2-2.

H. **CONSULT** Tech Spec sections 3.3.F, Recirculation Loop Operability **and** 3.10.A, Core Limits – MAPLHGR.

3. **If** more than one recirc pump is erratic,

then **PLACE** the speed controllers for the affected pumps in MANUAL. [ ]

A. **CONTROL** recirc flow in accordance with Procedure 301.2. [ ]

NOTE:	A licensed operator is required to perform the next step.

B. **If** speed control of the affected pumps is **not** regained

and power fluctuations are less than ±2.3% (APRMs)

or 15 MWe peak to peak,

then **CONTROL** the affected pumps using local manual control in accordance with Procedure 301.2. [ ]

C. **If** speed control of the affected pumps is still **not** regained

and power fluctuations are greater than approximately ±2.3% (APRMs)

or 15 MWe peak to peak,

then **PERFORM** the following:

1) **SCRAM** the reactor [ ]

2) **TRIP** the affected pumps [ ]

3) **EXECUTE ABN-1 and** section 3.2, Multiple Recirculation Pumps Trip of this procedure. [ ]

D. **DIAGNOSE** the flow controller malfunctions in accordance with Attachment ABN-2-2. [ ]

4.0 REFERENCES

4.1 GE SIL 251, Control of RPV Bottom Head Temperatures

4.2 Technical Specifications, Section 3.3.F.

4.3 Technical Specification Amendment #212 for 3 Loop Operation

4.4 Calculation C-1302-223-E170-043, OCNGS Recirculation Pumps' Capabilities and Operating Limitations for 3 Pump Operation.

4.5 Engineering Evaluation A207-3075E1, Two Recirculation Pump Operation Push Reactor Scram

5.0 ATTACHMENTS

5.1 ABN-2-1, Instructions for Closing Recirculation Pump Discharge Valves Locally at the Circuit Breaker.

5.2 ABN-2-2, Pump Trip During Normal Operation

5.3 ABN-2-3, Drive Motor Breaker Interlocks

ATTACHMENT ABN-2-1

Instructions for Closing Recirculation Pump Discharge Valves Locally At the Breaker

1. **DISPATCH** an electrician with a 0 – 5- amp clam-on ammeter to the affected Discharge Valve breaker MCC: [ ]

Valve	MCC
NG03A	1A21A
NG03B	1B21A
NG03C	1A21A
NG03D	1B21A
NG03E	1AB2

> **CAUTION**
>
> Closure of the discharge valve by holding in the close contactor bypasses the valve breaker over-loads and torque switch. Exceeding 11.7 amps running current could damage the valve/operator components.

2. **ESTABLISH** radio communications between the Control Room **and** the electrician at the MCC. [ ]

3. **INSTRUCT** the electrician to attempt Discharge Valve closure as follows:

   3.1 **INSTALL** the clamp-on ammeter. [ ]

   3.2 **HOLD** in the close contactor, while monitoring running current. [ ]

   3.3 **RELEASE** the close contactor if running current approaches 11.7 amps. [ ]

   3.4 **STOP and MAINTAIN** running current setting when the discharge valve begins to stroke as indicated by dual red **and** green light indications for the valve. [ ]

3.5 **INFORM** the Control Room of the running current observed **and** log into the Control Room log. [ ]

3.6 **When** the discharge valve indicates fully closed, **REMOVE** clamp on ammeter **and RESTORE** MCC. [ ]

ATTACHMENT ABN 2-2

Pump Trip During Normal Operation

1.0 Loss of Power

1.1 **If** DRIVE MOTOR OFF

and ON lights are **not** lit

or bus 1A **or** bus 1B are de-energized,

then **RESTORE** power in accordance with ABN-36. [ ]

1.2 **If** ACTUATE A

and ACTUATE B alarms are lit (E-1-a, E-2-a)

or ACTUATE C

and ACTUATE D alarms are lit (E-1-b, E-2-b)

then **ENTER** EOP RPV CONTROL. [ ]

1.3 While starting a recirculation pump,

if after placing the DRIVE MOTOR control switch to START the ON light does **not** light,

or drive motor current does **not** rise,

then **VERIFY** the interlocks listed in Attachment ABN 02-3 are met. [ ]

1.4 **If** the prerequisites in Attachment ABN 02-3 are satisfied

and the Drive Motor Breaker will **not** close,

then **REFER** to the DRV MOT BRKR TRIP alarm response procedure. [ ]

1.5 **If** any of the following conditions exist:

- Pump Suction Valve **not** fully open
- Pump Discharge Valve **or** Discharge Bypass Valve **not** fully open,

then **CONFIRM** correct system lineup in accordance with Procedure 301.2, Reactor Recirculation System. [ ]

1.6 **If** surges are **not** observed in the following indications approximately 1 to 2 minutes after closing the drive motor breaker:

- GENERATOR AMPS
- GENERATOR KILOVOLTS

then **VERIFY** the following conditions:

- The drive motor breaker lockout is reset **and** DRV MOT BRKR LOCKOUT alarm is off. [ ]
- Field Excitation is available from 120 VAC CIP-3. [ ]

1.7 **If** pump speed fails to stabilize to approximately 11.5 Hz 2-3 minutes after closing the drive motor breaker

or PUMP ΔP fails to increase to 10 psid

or PUMP LO ΔP alarm does **not** clear,

then **CONFIRM** that field excitation is applied (step 1.6). [ ]

A. **VERIFY** proper scoop tube response to speed controller changes. [ ]

B. **VERIFY** the red AIR FAIL light is OFF (Panel 3F).

If the light is on,

then **REFER** to step 1.6 of this attachment. [ ]

C. **CHECK** the speed controller for proper operation. [ ]

D. **VERIFY** that Instrument Air is available to the fluid coupler. [ ]

E. **VERIFY** that the scoop tube is in auto (Bailey positioner in the MG Set Room. [ ]

2.0 Pump Speed **not** maintained at desired setpoint.

2.1 **If** DRIVE MOTOR ON light is **not** lit,

then **REFER** to Section 1.0 of this attachment. [ ]

2.2 **If** operating in the master control mode, individual speed controller(s) **not** in AUTO,

then **PLACE** the individual controllers in AUTO in accordance with Procedure 301.2, Section 5.0, Placing a Recirculation Pump in Operation-Initial Startup. [ ]

2.3 **If** the red AIR FAIL light is lit,

then **CHECK** for any of the following conditions:

- 4160 V Bus 1A (1B) under voltage **or** loss of power. (This will de-energize the drive motor.) [ ]
- SPEED CONTROL lost alarm actuated. (This will generate a Speed Control signal failure.) [ ]
- Loss of Instrument Air. (This will cause less than 20 psi air pressure to the pneumatic controller.) [ ]

A. **REFER** to Procedure 301.2, Section for Scoop Tube Positioner Air Failure Lock. [ ]

2.4 **If** individual controller output is unstable

or does **not** vary in response to individual controller setpoint changes

or DCC X (Y) CRT messages indicate vital faults,

then **PERFORM** the following:

NOTE: A licensed Reactor Operator is required to perform all local recirculation flow changes, as these are reactivity manipulation.

A. **PLACE** the affected recirculation pump in local-manual control in accordance with Procedure 301.2, Reactor Recirculation System. [ ]

2.5 **If** the brake operating lever at the MG set is **not** in the AUTO position,

then **PLACE** the recirculation pump in the remote-manual control mode in accordance with Procedure 301.2 section for transferring pump control from local manual to remote (manual or auto). [ ]

2.6 **If** all operating pumps are **not** at the same speed,

then **MATCH** pump speeds in accordance with 301.2, Reactor Recirculation System, Section for Normal Operation – Changing Recirculation Flow. [ ]

ATTACHMENT ABN-2-3

Drive Motor Breaker Interlocks

Prerequisite	Check
Lockout reset	DRIVE MOT BRKR LOCKOUT ALARM OFF
Power available	Bus 1A or 1B energized.
Pump suction valve open	Valve OPEN light lit.
Pump discharge valve closed	Valve CLOSED light lit.
Pump discharge bypass valve open	Valve OPEN light lit.
RPV water level above lo-lo setpoint	ACTUATE A **and** B **and** ACTUATE C **and** D alarms OFF. RX LVL LO LO I (II) OFF (H-3-e, H-4-e).
RPV pressure below ARI setpoint	ACTUATE A **and** B **and** ACTUATE C **and** D alarms OFF. RX PRESS HI alarm OFF (H-3-f)
Drive motor breaker control power available	Bus 1A (1B) CNTRL DC LOST alarm(s) OFF (S-5-e, T-5-c)
MG set field breaker open	Field Breaker Open (Green) light lit on field breaker panel in M-G Set Room.
MG oil flow normal	Local indicator

AmerGen An Exelon Company	OYSTER CREEK GENERATING STATION PROCEDURE	Number 202.1	
Title **Power Operation**		Usage Level **1**	Revision No. 78

Prior Revision 77 incorporated the following Temporary Changes:

N/A

This revision 78 incorporates the following Temporary Changes:

TPC-04/01/2004-01

List of Pages

1.0 to 35.0
E1-1
E2-1
E3-1
E4-1

PROCEDURE HISTORY

REV	DATE	ORIGINATOR	DESCRIPTION OF CHANGE
56	02/99	H.S. Sharma	Modification to the system to assign alternate LPRM input to APRM Channel #8 (CAP O1999–0235).
57	03/99	T. Corcoran T. Romano	Delete requirements for completing heat balance calculations during power increases. Revise to update current procedure numbers and titles, reflect current Operations Management titles.
58	06/99	T. Romano	Revise step 4.9.1 to add when equation doesn't apply.
59	07/00	R. Thompson	Clarify requirements for PCS Heat Balance Accuracy Checks.
60	10/00	D. Chernesky	Reconfigure LPRM 28-09 and 36-09
61	11/00	R. Thompson	Implement PCIOMR requirements per CAP O2000-0940-7.
62	04/01	P. Bloss	Revise step 5.3.9 to put AOG on if available above 50%. Incorporates TC 01/21/01-1
63	07/01	T. Corcoran	Clarify definition of a mispositioned control rod.
64	07/01	T. Corcoran	Reflect changes due to the implementation of OP-AA-102-101.
65	03/02	T. Corcoran J. Ruark	Add LPRM input to APRM drawer count (to be done weekly). Clarify instruction for Rapid Power Reduction.
66	07/02	J. Ruark	Reflect in corporation of S.O. 21 into Procedure 403, change APRM LPRM input to a daily check (CAP O2002-0697)

PROCEDURE HISTORY
(continued)

67	07/02	J. Ruark	Correct typographical errors on 202.1-1
68	09/02	M. Loeser	Add Recirculation Flow limits for ICF
69	09/02	M. Loeser	Add requirements for FCTR cards and new Power Operations Curve.
70	09/02	C. Suchting	Add Precaution and Limitations for removing Feedwater Heaters from service.
71	10/02	C. Suchting W. Behrle	Implement stability option 2 and Mini Mella. Implement Powerplex and LPRM Restoration and FLLLP Rewording, delete 2 hour statement in 4.9, and add MCPR limit for 3 recirc pump operation.
72	01/03	R. Thompson	Incorporate new guidance for reactivity evolution planning execution.
73	03/03	R. Thompson	Editorial changed to correct step number references.
74	04/03	R. Thompson	Incorporate revised guidance for reactivity evolution execution based on NER DR-03-001, Revision 1.
75	04/03	H. Tritt	Incorporate guidance for changing Zinc Injection during power maneuvers and also provides the same guidance as Procedure 203, "Plant Shutdown", for limiting rate of power reductions to minimize impact on environment.
76	06/03	R. Thompson	GE SIL 649 on RWCU flow effects on power distribution, incorporate TCP 06-17-03-01, and format changes.
77	9/03	C. Suchting	Added procedure section 8.0 transition to three loop operation. Added placekeeping markings. Added guidance for control rod movement per OP-AB-103-104-1001. Clarified actions for thermal limits with different RWCU

			pump combinations.

PROCEDURE HISTORY
(continued)

78	03/04	P. Manning	CAPO2004-0021-2, Minor editorial format changes. Correct typos, reference, titles and insert commitment tracking annotation in procedure. Lowered power for placing second stage reheaters in service to 300mwe.

1.0 PURPOSE

To provide a set of guidelines to follow for normal plant operation (RUN mode). Operations included in this procedure are as follows:

Section	Operation
3.0	General Operating Instructions
4.0	Monitoring Core Parameters/Performance
5.0	Raising Power
6.0	Power Reductions
7.0	Rapid Power Reductions
8.0	Transition To Three Loop Operation
9.0	Attachments

2.0 REFERENCES

2.1 Procedures

- OP-OC-100, Conduct of Operations
- OP-OC-1211-1001, Reactivity Related Evolution Plans and Briefs Term for Oyster Creek
- 116, Surveillance Testing Program
- 234, Core Monitoring Using Powerplex III
- 317.4, Feedwater Hydrogen Injection
- 323, Main Condenser Circulating Water System
- 324, Thermal Dilution Pumps
- 403, LPRM-APRM System Operations
- 409, Operation of the Rod Worth Minimizer
- LS-OC-125, Corrective Action Program (CAP) Procedure
- 1001.6, Core Heat Balance and Feedwater Flow Calculation - Power Range
- 1001.22, Core Monitoring and Operation
- OP-AA-102-101, Unit Load Changes
- NF-AA-440, Fuel Conditioning
- OP-AB-103-104-1001 BWR Control Rod Movement Requirements

6.0 POWER REDUCTIONS

6.1 Prerequisites

6.1.1 A reduction in plant load is required to complete a planned evolution (surveillance testing, maintenance, etc.). [ ]

6.2 Precautions and Limitations

6.2.1 During power reductions, Dilution Pumps shall remain in the existing configuration as specified by Procedure 324, Thermal Dilution Pumps, unless other guidance is provided by Environmental.

6.2.2 The power reduction is to be terminated when the desired power level is achieved.

6.2.3 Do **not** exceed a maximum core flow of 17.6×10^4 GPM with any feedwater heater out of service or 17.7×10^4 GPM with all feedwater heaters in service.

6.2.4 Digital Feedwater Control System (DFCS) tuning is optimized for all three feedwater strings in service at full power. Low power operation with three (3) feedwater strings in service may result in sluggish Main Feedwater Regulating Valve (MFRV) response and possible erratic RPV level control (due to reduced control signal strength)

6.3 Procedure

> NOTE
>
> Guidance on Load Maintenance, off hour load reductions, etc., is provided on the Core Maneuvering Daily Instruction Sheet.

6.3.1 Complete notification of the pending power reduction as follows:

6.3.1.1 IF the load reduction is unplanned (forced),

THEN **PERFORM** notifications in accordance with Procedure OP-AA-102-101, Unit Load Changes. [ ]

6.3.1.2 IF the load reduction is planned,

THEN **NOTIFY** the system dispatcher. [ ]

6.3.2 **COMPLETE** a reactivity management evaluation in accordance with HU-AA-1211, Pre-job, Heightened Level of Awareness, Infrequent Plant Activity and Post-job Briefings. [ ]

NOTE

With intake water temperature below 50°F, the removal of dilution pumps or circulating water pumps from service is dependent on the fish species in the discharge canal.

6.3.3 IF intake water temperature is below 50°F,

THEN **NOTIFY** Environmental Affairs for guidance on dilution pump and circulating water pump operations. [ ]

6.3.4 IF power level will be changed by greater than 10 percent,

THEN **RECORD** the following initial conditions in the Control Room Log: [ ]

- Reactor power
- Turbine generator output
- Recirculation flow
- Reactor Vessel level and pressure
- Time of power level change

NOTE

In order to minimize the impact to Marine Life, attempts should be made to limit power decreases to 10% per hour. This should correlate to approximately a 2° F per hour decrease in canal discharge temperature.

6.3.5 **REDUCE** reactor power using control rods or recirculation flow as directed by Reactor Engineering. [ ]

6.3.5.1 A second licensed operator will **VERIFY** all rod manipulations performed by the assigned 4F Control Room Operator. [ ]

6.3.6 During the power change, **MONITOR** the following parameters to verify expected response: [ ]

- LPRM and/or APRM levels
- Reactor pressure
- Steam line flow
- Turbine generator output
- Turbine control valve and/or bypass valve position
- Feedwater flow
- Core thermal power
- FLLLP

6.3.7 **ADJUST** the EPR/MPR setpoint as required to maintain reactor pressure between 980 and 1020 psig. [ ]

6.3.8 **MONITOR** moisture separator drain tank level for erratic behavior as load is reduced. [ ]

6.3.9 IF moisture separator drain tank level **cannot** be maintained,

THEN **DISCONTINUE** power reduction, **STABILIZE** plant conditions, and **ALLOW** the drain system to recover if plant conditions permit. [ ]

6.3.10 IF reactor power changes by 289.5 MWth in one hour,

THEN **NOTIFY** Chemistry to initiate reactor coolant sampling in accordance with Technical Specification 3.6.A.4. [ ]

6.3.11 **REDUCE** Feedwater Hydrogen Injection by 10% of the 100% power setting for every 10% power reduction in accordance with Procedure 317.4, Feedwater Hydrogen Injection. [ ]

6.3.12 **REDUCE** Feedwater Zinc Injection by 10% of the 100% power setting for every 10% power reduction in accordance with Procedure 317.5, Feedwater Zinc Injection. [ ]

NOTE

The third Condensate and Feedwater pumps should be removed from service when the plant is expected to remain at reduced power for more than 4 hours to mimimize pump vibrations.

Securing the Condensate pump that is drawing the lowest amperage will minimize the potential for pump cavitation (due to deadheading the weakest pump)

At low power, two Condensate/Feed pump operation will improve Main Feedwater Regulating Valve (MFRV) responsiveness

6.3.13 WHEN reactor power reaches approximately 70% power,

AND it is desired to remove a Condensate and/or Feedwater Pump from service,

THEN **PERFORM** the following:

1. **SECURE** one (1) Feedwater Pump and its associated string in accordance with Procedure 317, Feedwater System (Feed Pumps to Reactor Vessel). [ ]
2. **SECURE** one (1) Condensate Pump in accordance with Procedure 316, Condensate System. [ ]

6.3.14 WHEN generator load is below 400 MWe, and prior to reaching 300 MWe.

THEN **VERIFY** the second stage reheaters automatically are removed from service or **REMOVE** them from service manually in accordance with Procedure 318, Main Steam System and Reheat Steam. [ ]

6.3.15 WHEN reactor power reaches approximately 40% power,

THEN **REMOVE** the AOG System from service in accordance with Procedure 350.1, Augmented Off Gas System Operation. [ ]

6.3.16 WHEN the 25 PERCENT LOAD TRIP NOT RESET alarm (Q-8-a) actuates,

THEN **PERFORM** the following:

6.3.16.1 **REDUCE** load slowly (Main Control Valves less than 35% open). [ ]

6.3.16.2 **BYPASS** the no load trip circuit (Main Control Valves less than 15% open) by depressing the green button on the back of Panel 13R. [ ]

6.3.16.3 **VERIFY** that the 25 PERCENT LOAD TRIP NOT RESET alarm (Q-8-a) clears. [ ]

6.3.17 WHEN generator load reaches approximately 200 MWe,

THEN **PERFORM** the following:

6.3.17.1 **REMOVE** the feedwater heaters from service in accordance with Procedure 317.1, Feedwater Heaters. [ ]

> NOTE
>
> If a Condensate and Feedwater Pump was secured in step 6.3.13 then steps 6.3.17.2and 6.3.17.3 are not required to be completed.

6.3.17.2 **CONFIRM** one (1) Feedwater Pump and its associated string secured in accordance with Procedure 317, Feedwater System (Feed Pumps to Reactor Vessel). [ ]

6.3.17.3 **CONFIRM** one (1) Condensate Pump secured in accordance with Procedure 316, Condensate System. [ ]

6.3.17.4 **ISOLATE** two (2) condensate demineralizers and **MAINTAIN** Condensate Demineralizer differential pressure in accordance with Procedure 319, Condensate Demineralizer Resin Regeneration & Transfer System. [ ]

6.3.18 WHEN Feedwater flow is less than 2.0 x 106 lbm/hr but exceeds 1.5 x 106 lbm/hr.,

THEN **PERFORM** the following:

6.3.18.1 **SECURE** one (1) Feedwater Pump and its associated string in accordance with Procedure 317, Feedwater System (Feed Pumps to Reactor Vessel). [ ]

6.3.18.2 **SECURE** one (1) Condensate Pump in accordance with Procedure 316, Condensate System. [ ]

6.3.18.3 **ISOLATE** two (2) condensate demineralizers and MAINTAIN Condensate Demineralizer differential pressure in accordance with Procedure 319, Condensate Demineralizer Resin Regeneration & Transfer System. [ ]

6.3.19 IF power level was changed by greater than 10 percent,

THEN **RECORD** the following final conditions in the Control Room Log: [ ]

- Reactor power
- Turbine generator output
- Recirculation flow
- Reactor vessel level and pressure
- Time of completion

6.3.20 WHEN plant conditions permit,

THEN **RAISE** power in accordance with Section 5.0.

7.0 RAPID POWER REDUCTIONS (SOER 94-01)

NOTE
This procedure section is to be used when directed by an OS.

7.1 IF at any time during the rapid power reduction the desired power level is achieved or the cause of the reduction is mitigated,

THEN **TERMINATE** the reduction as directed by an OS.

7.2 **REDUCE** reactor recirculation flow to 8.5 x 10^4 gpm, the minimum allowed in the RUN mode. [ ]

7.3 **INSERT** the CRAM array. [ ]

7.4 **MONITOR** the following parameters for expected response:

- APRM levels [ ]
- Reactor pressure [ ]
- Core Thermal power [ ]
- Reactor water level [ ]
- Turbine Generator Parameters (vacuum, vibrations, etc.) [ ]
- FLLLP [ ]

7.5 **ADJUST** the EPR/MPR setpoint as required to maintain reactor pressure between 980 and 1020 psig. [ ]

7.6 **CONTROL** and **MAINTAIN** plant parameters within normal expected bands. [ ]

7.7 WHEN reactor power is reduced to 70% power,

AND intake canal temperature is less than 50°F,

THEN **PERFORM** the following:

7.7.1 **SECURE** one (1) Circulating Water Pump in accordance with Procedure 323, Main Condenser Circulating Water System, such that only three (3) pumps are running. [ ]

7.7.2 **SECURE** one of the two operating Dilution Pumps in accordance with Procedure 324, Thermal Dilution Pumps. [ ]

7.7.3 **NOTIFY** Environmental of rapid power reduction. [ ]

7.8 WHEN generator load is below 400 MWe, and prior to reaching 300 MWe.

THEN **VERIFY** the second stage reheaters automatically are removed from service or remove them from service manually in accordance with Procedure 318, Main Steam System and Reheat Steam. [ ]

> NOTE
>
> The rod withdrawal sequence will provide the rods to be selected. All rods are inserted to position 00 without stopping at intermediate positions.

7.9 After the CRAM array is inserted, and further power reduction is required, **INSERT** control rods to position 00 in reverse order in accordance with the rod withdrawal sequence. [ ]

7.10 IF during the rapid power reduction, controlling plant parameters **cannot** be maintained,

THEN **SCRAM** the reactor in accordance with ABN-1. [ ]

7.11 WHEN The reactor reaches approximately 40% power,

THEN **REMOVE** the AOG System from service in accordance with Procedure 350.1, Augmented Off Gas System Operation. [ ]

7.12 WHEN the 25 PERCENT LOAD TRIP NOT RESET alarm (Q-8-a) actuates, [ ]

THEN **PERFORM** the following:

7.12.1 **REDUCE** load slowly (Main Control Valves less than 35% open). [ ]

7.12.2 **BYPASS** the no load trip circuit (Main Control Valves less than 15% open) by depressing the green button on the back of Panel 13R. [ ]

7.12.3 **VERIFY** that the 25 PERCENT LOAD TRIP NOT RESET alarm (Q-8-a) clears. [ ]

7.13 **NOTIFY** Reactor Engineering for further guidance. [ ]

7.14 **COMPLETE** notifications in accordance with Procedure OP-AA-102-101, Unit Load Changes. [ ]

7.15 **CONTINUE** power reduction in accordance with Procedure 203. [ ]

7.16 WHEN plant conditions permit,

THEN **RAISE** power in accordance with Section 5.0 [ ]

8.0 TRANSITION TO THREE LOOP OPERATIONS.

8.1 Prerequisites

8.1.1 The plant is currently operating with four loops in-service and one loop idle or isolated. [ ]

8.1.2 This procedure section is applicable to a deliberate entry into three loop operation. For an inadvertent entry (i.e. Recirc pump trip from four loop operations) follow the appropriate ABN. [ ]

8.2 Precautions and Limitations

8.2.1 Power operation with a maximum of two idle recirculation loops or one idle recirculation loop and one isolated recirculation loop is permitted. The reactor shall not operate with two isolated recirculation loops.

8.2.2 When there are two inoperable recirculation loops (either two idle recirculation loops or one idle recirculation loop and one isolated recirculation. Loop) the reactor core thermal power shall not exceed 90% of rated power.

8.2.3 The performance of this procedure involves intentional entry into the buffer zone of the power operations curve.

8.2.3.1 The Buffer zone is a region where heightened awareness is required due to proximity to trip setpoints and the exclusion zone. Entry into the buffer zone is confirmed by flow being less than 8.5×10^4 GPM. (Refer to Procedure 202.1, Power Operation, Attachment 202.1-2). Entry into the buffer zone is **not** permitted without Shift Manager approval and recirc. flow shall not be reduced below 7.0×10^4 GPM.(**CM-1**)

8.2.4 Due to proximity to trip and rod block setpoints maintain heightened awareness to APRM gain adjustment. More frequent gain adjustments may be required.

8.2.5 Maintain recirc. flow greater than or equal to 7.0×10^4 GPM for this procedure section. The minimum limit in the run mode of 8.5×10^4 GPM does **not** apply.

8.2.6 Maximum recirc. pump speed with 3 operating loops is limited to 33 Hz.

8.3 Procedure

> NOTE:
> The purpose of the following step is to establish reactor power such that it is below the low flow section of the rod block setpoint line on the power operations curve when the recirc pump is removed from service.

8.3.1 **PERFORM** a power reduction IAW section 6.0 (Power reduction) or 7.0 (Rapid power reduction) of this procedure until all the following final conditions have been established.

- Four recirc loop operation. [ ]
- Recirculation pump speed less than to 33 Hz. [ ]
- Reactor power has been lowered using control rods until the Adjusted APRM value on the PCS heat balance display is less than the value that satisfies the following equation. [ ]

  Maximum Adjusted APRM = 3.73 x (Total recirc flow in 10^4 GPM as read on the recorder 3F or the PCS heat balance) +28

  Example: Flow = 9.0 x 10^4 GPM

  Maximum Adjusted APRM = 3.73(9.0)+28 = 61.57%

  Enter calculated value Here _____ [ ]

8.3.2 **MONITOR** and **ADJUST** APRM gains as necessary. [ ]

8.3.3 **PERFORM** the following steps concurrently.

- **IDLE** the fourth recirc. loop I.A.W proc 301.2. [ ]
- **MAINTAIN** indicated flow on the recorder (3F) greater than 7.0 x 10^4-GPM. [ ]
- **MAINTAIN** pump speed of the recirc. pumps to remain in operation less than 33 Hz. [ ]

8.3.4 **MONITOR** and **MAINTAIN** thermal limits I.A.W. section 4.0 of this procedure. [ ]

9.0 ATTACHMENTS

9.1 202.1-1, Daily APRM Status Check

9.2 202.1-2, Power Operation Curve

9.3 202.1-3, APRM 100% Setpoint Determination

9.4 202.1-4, Core Daily Checks

AmerGen An Exelon/British Energy Company	OYSTER CREEK GENERATING STATION PROCEDURE	Number ABN-17	
Title FEEDWATER SYSTEM ABNORMAL CONDITIONS		Usage Level 1	Revision No. 0

Prior Revision 0 incorporated the following Temporary Changes:

N/A

This Revision 0 incorporates the following Temporary Changes:

N/A

List of Pages

1.0 to 15.0

AmerGen An Exelon/British Energy Company	OYSTER CREEK GENERATING STATION PROCEDURE	Number ABN-17
Title FEEDWATER SYSTEM ABNORMAL CONDITIONS		Revision No. 0

FEEDWATER SYSTEM ABNORMAL CONDITIONS

1.0 APPLICABILITY

This procedure is applicable following abnormal conditions affecting the feedwater system. As such, it is designed in three sections:

Loss of Feedwater Heater(s) — Section 3.1

- Heater Isolation
- Turbine Bypass Valve Open
- Isolation of Feedwater Heater(s)
- Closure of Extraction Steam Line Valve(s)

Feedwater Flow Control Failure — Section 3.2

- Level Transient or Instability
- MFRV/LFRV Abnormal Response

Feed Pump Failures — Section 3.3

- Feed Pump(s) Trip
- Condensate Pump(s) Trip
- ROPS Initiation

AmerGen An Exelon/British Energy Company	OYSTER CREEK GENERATING STATION PROCEDURE	Number ABN-17
Title FEEDWATER SYSTEM ABNORMAL CONDITIONS		Revision No. 0

2.0 INDICATIONS

2.1 Annunciators – Loss of Feedwater Heater(s)

Engraving	Location	Setpoint
HP A3 (B3, C3)	N-3-d (e, f)	HI: 27'11" LO: 27'6"
IP A2 (B2, C2)	N-6-d (e, f)	HI: 27'1/2" LO: 26'3.5"
LP A1 (B1, C1)	N-8-d (e, f)	HI: 30'5 3/4" LO: 29'5 3/4"
REV CK VLV TRIP: HP A3 (B3, C3) IP A2 (B2, C2)	 N-1-d (e, f) N-4-d (e, f)	 Valve closed Valve closed
MRV OPEN: HP A3 (B3, C3) IP A2 (B2, C2) LP A1 (B1, C1)	 N-2-d (e, f) N-5-d (e, f) N-7-d (e, f)	 Valve open Valve Open Valve Open

2.2 Annunciators – Flow Control Failure

Engraving	Location	Setpoint
RX LVL HI/LO	H-7-e	HI: 170 in. LO: 146 in.
FCS/RFCS TROUBLE	J-8-c	various
MFRV LOCKUP A	J-5-d	Loss of air/signal
MFRV LOCKUP B	J-5-e	Loss of air/signal
MFRV LOCKUP C	J-5-f	Loss of air/signal
MIN FLOW VALVE OPEN A	J-4-d	V-2-18 open
MIN FLOW VALVE OPEN B	J-4-e	V-2-19 open
MIN FLOW VALVE OPEN C	J-4-f	V-2-20 open

2.3 Parameters – Loss of FW Heaters

Parameter	Location	Change
REACTOR POWER	4F	rise
GROSS MEGAWATTS	8F	rise
FEEDWATER TEMPS	5F/6F	lower

2.4 Parameters – Flow Control Failure

Parameter	Location	Change
TOTAL FEEDWATER FLOW	5F/6F	Changes will vary depending upon the nature of the malfunction
FEED PUMP AMPS	5F/6F	
RPV LEVEL	5F/6F	
MFRV/LFRV CONTROLLER DISPLAYS (S, P, V)	5F/6F	
MFRV A (B, C) LIMIT	5F/6F	Amber light lit

2.5 Other Indications

1. Flow Control Failure

   A. Steam flow to Feed flow mismatch.

   B. Unbalanced feedwater train flows.

   C. Feedwater Flow Control Valves do not respond to changing demand signals.

3.0 OPERATOR ACTIONS

3.1 Loss of Feedwater Heating

If while executing section 3.1 of this procedure, any entry condition for any EOP occurs,

then EXECUTE this section concurrently with the appropriate EOP. [ ]

1. If three or more feedwater heaters have tripped,

   then REDUCE recirculation flow, as necessary, to maintain power 20% below the pre-trip value or until 8.5×10^4 gpm is reached. [ ]

2. If less than three feedwater heaters have tripped,

   then REDUCE recirculation flow, as necessary to maintain power at or below its pre-trip value or until 8.5×10^4 gpm is reached. [ ]

3. If recirculation flow is at minimum and a further power reduction is required,

   then INSERT the CRAM array, as necessary, to maintain power below the rod block setpoint. [ ]

4. MONITOR reactor power and recirculation flow on the Power Operation Curve. [ ]

   A. If the Buffer Region is entered,

      then VERIFY the Exclusion Region is <u>not</u> entered and monitor for power oscillations. [ ]

B. If the Exclusion Region is inadvertently entered,

then EXIT the region using rods or flow. [ ]

C. If power oscillations are observed and exceed ±5% (10% peak-to-peak),

then SCRAM the reactor and EXECUTE ABN-1. [ ]

NOTE: FLLLP: Fraction of Limiting Load Line Power is presented as a percentage of allowable operating limit. FLLLP is calculated using core thermal power, as determined by heat balance, and core flow. FLLLP is displayed on the PCS. FLLLP is subject to the same variations that effect core thermal power and flow. FLLLP should be monitored carefully during periods when flow is being reduced, when control rods are being withdrawn and during periods of Xenon redistribution.

The normal steady state maximum average value for FLLLP is 98%.

5. MONITOR FLLLP during flow reductions [ ]

A. If FLLLP reaches 98%,

then DO not PERFORM any rod withdrawals [ ]

B. If FLLLP reaches 99%,

then REDUCE power by inserting control rods to reestablish margin to the FLLLP limit. [ ]

C. If FLLLP reaches 100%,

then PERFORM the following [ ]

1. Immediately REDUCE power by inserting control rods.

2. INFORM Director of Operations and INITIATE a CAP. [ ]

6. MAKE notifications required by Procedure OP-OC-106-101, and/or the Exelon Reportability Reference Manual. [ ]

7. MONITOR the following parameters for indications of fuel damage:

- Off gas activity [ ]
- Main steam line radiation [ ]
- Reactor coolant activity [ ]

8. MAINTAIN plant load below the following limitations in order to prevent imbalances in turbine loading:

Turbine Loading with Feedwater Heaters Out of Service		
HTR ALL BANKS		ACTUAL GENERATION GROSS OUTPUT
	HP	670 MWe
	IP & HP	670 MWe
	IP, HP & LP	670 MWe
ONE BANK ONLY		
	LP or IP	636.5 MWe

[ ]

	HP, LP & HP, or LP & IP	603 MWe
	IP & HP	569.5 MWe
	IP, LP, & HP	502.5 MWe
For heaters in more than one bank out of service use the most restrictive case from above or as directed by the U.S.		

9. LIMIT core flow to 17.6 x 10^4 gpm with any feedwater heater out of service. [ ]

10. If all feedwater heaters are out or service,

    then LIMIT core flow to 17.7 x 10^4 gpm. [ ]

11. If feedwater temperature lowers to less than 215 °F at rated power,

    then **PLACE** feedwater heaters in service to restore feedwater temperature above 215 °F **or REDUCE** reactor power to less than 25% of rated power. [ ]

12. OBTAIN permission from the Director of Plant Operations and Reactor Engineering prior to returning feedwater heaters to service. [ ]

3.2 Flow Control Valve Failure

If while executing section 3.2 of this procedure, any entry condition for any EOP occurs,

then EXIT this section and ENTER the appropriate EOP.

1. Level Transient or Instability

A. **If** any of the following are determined to be the cause of the instability,

then GO TO the applicable procedure below:

Selected Level Transmitter Malfunction, Section 11.7, Proc. 317, Changing Level Select. [ ]

EPR malfunction: ABN-9. [ ]

Recirc Flow oscillations: ABN-3 [ ]

MFRV/LFRV oscillations: ABN-17, sec. 3.2.2 [ ]

otherwise, CONTINUE with this procedure. [ ]

B. **If** RPV level is rising,

then STABILIZE level as follows:

1) **PLACE** the active level controller in MAN (Master level controller **or** LFRV controller). [ ]

2) **If** RPV level control is **not** regained in the manual mode,

then GO TO section 3.2.2. [ ]

C. **If** RPV level is lowering

then STABILIZE RPV water level as follows: [ ]

1) **If** a Feedwater **or** Condensate pump trip is indicated, with **no** overload,

then **RESTART** the affected pump **or** start another pump **or PERFORM** a rapid power reduction, as directed by the U.S. [ ]

D. **RESTORE and MAINTAIN** RPV level 155"–165". [ ]

E. **DIAGNOSE** the cause of the failure in accordance with section 3.3 of this procedure. [ ]

F. **If** a feedwater heater leak **or** pipe break is indicated,

then **ISOLATE** the affected string **or**

SCRAM the reactor **and EXECUTE** ABN-1. [ ]

2. MFRV/LFRV Response Abnormality

A. **PLACE** the affected individual controller in MAN. [ ]

B. **If** control of RPV level is **not** regained in the manual mode,

then **PERFORM** the following:

1) **CONTROL** RPV water level 147 in to 171 in by throttling the associated Heater Bank Outlet valve until local-manual control can be established. [ ]

2) **PLACE** the affected valve in local-manual control in accordance with Procedure 317, Condensate and Feed System. [ ]

C. **BALANCE** flows through each of the feedwater trains. [ ]

D. **RESTORE and MAINTAIN** RPV level 155"-165". [ ]

E. **DIAGNOSE** the cause of the failure in accordance with section 3.3 of this procedure. [ ]

3.3 Loss of Feed/Feed Flow Abnormalities

A. Feed Pump Trip

PERFORM a rapid power reduction as directed by the Unit Supervisor.

B. Condensate Pump Trip

PERFORM a rapid power reduction as directed by the Unit Supervisor.

C. Multiple Feed Pumps Trip

1) **SCRAM** the reactor **and EXECUTE** ABN-1. [ ]

D. Multiple Condensate Pumps Trip

1) **SCRAM** the reactor **and EXECUTE** ABN-1. [ ]

E. Feed Flow Abnormalities

1) **CHECK** feed pump and associated valves lined up correctly. [ ]

2) **If** the block valve(s) are misaligned as indicated by:

- Individual feedwater flow in the 'A' **or** 'C' string unbalanced.
- BLOCK VLV TROUBLE annunciators in alarm (J-6-d (f)).

- FCS/RFCS TROUBLE annunciator in alarm (J-8-c).

then **PLACE** MFRV BLOCK VALVE control switch in the required position; operate the block valve manually, as required. [ ]

3) **If** INST AIR SUPPLY PRESSURE is less than 100 psig,

then **CONTROL** RPV level in accordance with ABN-35, Instrument Air System Failure. [ ]

4) **If** a CONFIRMED leak from the Condensate and Feedwater System has occurred,

then **PERFORM** the following:

a. **If** the leak can be isolated **and** is within a feedwater heater string,

then **TRIP** the associated feed pump **and** **CLOSE** the associated Heater Bank Inlet Valve (V-2-7 (8, 9) **and** Heater Bank Outlet Valve (V-2-10 (11, 12)). [ ]

5) **If** the leak can **not** be isolated,

then **COMMENCE** a normal plant shutdown in accordance with Procedure 203, Plant Shutdown. [ ]

6) **If** the leak can **not** be isolated **and** CONDENSATE STORAGE TANK LEVEL is lowering at a rate of greater than one foot per hour,

then **SCRAM** the reactor **and EXECUTE** ABN-1 [ ]

F. **If** the controllers are **not** lined up as follows for each feedwater loop in service:

Mode	Controller Mode			
	MASTER FW LEVEL CONTROLLER	MFRV FLOW CONTROLLER	LFRV FLOW CONTROLLER	DEVICE IN CONTROL
Master AUTO	AUTO	AUTO	MANUAL	Master Controller **S** Display
Master MANUAL	MANUAL	AUTO	MANUAL	Master Controller **V** Display
Remote MANUAL	MANUAL	MANUAL	MANUAL	MFRV/LRFV Controller **V** Display
LFRV AUTO	MANUAL	MANUAL	AUTO	LFRV Controller **S** Display

then **ESTABLISH** the correct controller lineup in accordance with Procedure 317, Feedwater System. [ ]

G. **ROPS Initiation**

1) **If** ROPS has actuated as indicated by:

- RPV level greater than 181 in.
- ROPS annunciators actuated (H-5(6)-d)

then **PERFORM** the following:

a. **CONFIRM** normal operation of DCS in accordance with Procedure 418.1, Operation of Digital Feedwater and Reactor Recirc. Flow Control System. [ ]

b. **RE-START** a feed pump in accordance with Procedure 317. [ ]

c. **RESTORE** RPV level to the desired control band. [ ]

d. **If** a scram occurred,

then **EXIT** this procedure **and** **EXECUTE** ABN-1, Reactor Scram. [ ]

4.0 **REFERENCES** - None

5.0 **ATTACHMENTS** - None

QUESTION #SRO-22

One hour has elapsed since a steam line break occurred in the Turbine Building. The transient has caused fuel damage, a reactor scram, but manual closure of the MSIVs was NOT successful. Following the transient the following conditions exist:

- All rods reached 00 on the SCRAM
- Torus temperature is 96 degrees F
- There is indication of 50,000 lbs/hr flow on the "A" main steam line flow instrument
- RPV level is 60" TAF and slowly increasing from a low point of 30" TAF
- RPV pressure is 760 psig and dropping slowly
- Security calls and informs you that steam can be seen issuing from, the Turbine Building
- Chemistry sampling results of reactor coolant are NOT in yet but the accompanying HP reported that the sample bottle was 5 R/HR when the chemist left the sample station
- Iodine release is 50 uCI/sec
- An HP calls from Route 9 bridge and reports 700 mREM/hr TEDE at his location

Classify the event.

A. General Emergency

B. Site Area Emergency

C. Alert

D. Unusual Event

ANSWER: A

Question SRO 22: Oyster Creek's position

Per EPIP-OC-.01, Classification of Emergency Events (revision 14), Category J, "Radiological Releases",:

- Iodine release greater than 40 μCi/sec is an ALERT classification [J-2].
- Valid integrated dose at or beyond the site boundary of ≥ 5 mREM but ≤ 1000 MREM TEDE is a SITE AREA EMEGENCY [J-4].

Based on the HP call of 700 mREM[/hr] TEDE at the Route 9 bridge, this constitutes a SITE AREA EMEGENCY, not a GENERAL EMERGENCY.

Therefore the correct answer should be "B" (not "A").

Oyster Creek recommendation: Accept "B" as the correct answer.

References: EPIP-OC-.01, Classification of Emergency Events (revision 14), Category J. (sent previously)

APPENDIX 2

Category J "Radiological Releases"

(J) *Condition Applicability*	*All Plant Conditions.*
Basis	***This covers any event which leads to a rad release regardless of plant condition.***
Classifications	Unusual Event
EAL's	1. Noble Gas: Stack Monitor greater than CPS_{UE} -or- 2. Iodine: Release rate greater than 4 uCi/sec -or- 3. 10 CFR 20, Appendix B, Table 2, Column 2, limits exceeded in discharge canal at Rt. 9 Bridge -or- Off-site Dose: 4. A valid integrated dose at or beyond the Site Boundary of greater than or equal to 0.1 mRem total whole body (TEDE) but less than 10 mRem total whole body dose (TEDE) exists as indicated by: dose projections or field team readings -or- 5. A valid integrated dose at or beyond the Site Boundary of greater than or equal to 0.5 mRem (CDE) adult thyroid but less than 50 mRem (CDE) adult thyroid dose exists as indicated by: dose projections or field team readings.
Basis	Unplanned releases in excess of the site technical specifications that continue for 5 minutes or longer represent a potential degradation in the level of safety. The final integrated dose is not the primary concern here, it is the degradation in plant control implied by the fact that the release was not isolated. The term "Unplanned", as used in this context, includes any release for which a radioactive discharge permit was not prepared, or a release that exceeds the conditions (e.g., minimum dilution flow, maximum discharge flow, alarm setpoints, etc.) on the applicable permit. Offsite Dose due to plant releases (<u>readings above background</u>) can be determined from field measurement readings or dose projections. Monitor indications are calculated on the basis of the methodology of the Offsite Dose Calculation Manual (ODCM), which demonstrates compliance with 10CFR20 and/or 10CFR50 Appendix I requirements. In EAL 4, the 0.1 mR value is based on a proration of two times the 500 mR/yr for an individual member of the public stated in the Oyster Creek Off-Site Dose Calculation Manual, rounded down to 0.1 mRem per event.

APPENDIX 2

Category J "Radiological Releases"

Classification Alert

EAL's

1. Noble Gas: Stack Monitor greater than CPS
-or-
2. Iodine: Release rate greater than 40 uCi/sec
-or-
3. 10 CFR 20, Appendix B, Table 2, Column 2, Limits exceeded by a factor of 10 in discharge canal at Rt. 9 Bridge.
-or-

Offsite Dose:

4. A valid integrated dose at or beyond the Site Boundary of greater than or equal to 10 mRem but less than 50 mRem total whole body dose (TEDE) exists as indicated by: dose projections or field team readings.
-or-
5. A valid integrated dose at or beyond the Site Boundary of greater than or equal to 50 mRem but less than 250 mRem (CDE) adult thyroid dose exists as indicated by: dose projections or field team readings.

Basis

This event escalates from the Unusual Event by escalating the magnitude of the release by a factor of 10. In EAL 3, the 10.0 mR/hr value is based on a proration of 200 times the 500 mR/Yr limit for an individual member of the public stated in the Oyster Creek Off-Site Dose Calculation Manual, rounded down to 10.0 mR/hr. EALs' at this level or higher are entry conditions to Procedure EMG-3200.12.

Classification Site Area Emergency

EAL's

Offsite Dose:

4. A valid integrated dose at or beyond the Site Boundary of greater than or equal to 50 mRem but less than 1000 mRem (1 Rem) total whole body dose (TEDE) exists as indicated by: dose projections or field team readings.
-or-
5. A valid integrated dose at or beyond the Site Boundary of greater than or equal to 250 mRem but less 5000 mRem (5 Rem) (CDE) adult thyroid exists as indicated by: dose projections or field team readings.

Basis

The 50 mRem is based on the corporate philosophy for classification relative to the EPA's protective action guidelines, where 5% of the lower limit shall be the trigger value for a Site Area Emergency. The 250 mRem child thyroid dose is in consideration of the 1:5 ratio established by the PAG's for total whole body dose (TEDE) to (CDE) adult thyroid relationship.

APPENDIX 2

Category J "Radiological Releases"

Classification General Emergency

EAL's Offsite Dose:

4. A valid integrated dose at or beyond the Site Boundary of greater than or equal to 1000 mRem (1 Rem) total whole body dose (TEDE) exists as indicated by: dose projections or field team readings.

-or-

5. A valid integrated dose at or beyond the Site Boundary of greater than or equal to 5000 mRem (5 Rem) (CDE) adult thyroid exists as indicated by: dose projections or field team readings.

Basis The 1000 mRem total whole body (TEDE) and the 5000 mRem (CDE) adult thyroid integrated dose are based on the proposed EPA protective action guidance which indicates that public protective actions are warranted if the dose exceeds 1 rem total whole body (TEDE) or 5 rem (CDE) adult thyroid. This is consistent with the emergency class description for a General Emergency and the Nureg's initiating conditions. Actual meteorology (including forecasts) should be used.

QUESTION #SRO-23

The plant is in normal full power operation with no LCOs on April 1, 2004 when massive grid instabilities result in the loss of offsite power for the foreseeable future. The plant responds as designed including both Standby Diesel Generators which have started and loaded to their respective buses. The following conditions exist as of noon on April 1, 2004:

- Diesel fuel oil delivery is uncertain due to infrastructure problems
- The Standby Diesel Generator Fuel Tank is at 14,500 gallons
- The heating boiler tank has 16,500 gallons of available fuel
- **NO** other sources of diesel fuel are available on site
- The heating boilers are shutdown for maintenance

How long is the fuel supply adequate considering the TS Basis consumption rate?

For your answer assume two diesels continue to run at the consumption rate specified in Amendment 18. Round off you answer to the nearest day.

A. Three days

B. Four days

C. Five days

D. Seven days

ANSWER: B

Question SRO 23: Oyster Creek's position

Based on the given information, there is 31,000 gallons of diesel fuel available for emergency diesel engine operation. Technical Specifications bases for section 3.7, Auxiliary Electrical Power, assumes the Emergency Diesels are available to be run as long as the fuel supply holds out. The fuel supply takes into consideration the Diesel Fuel Oil tank, as well as the heating boilers fuel supply. Therefore, taking into consideration 14,500 gallons in the fuel oil tank and 16,500 in the heating boiler tank, there is a total of 31,000 gallons, NOT just 16,500 as stated in the question explanation.

The 3-day consumption rate specified in Oyster Creek Technical Specification Amendment 18 is 12,410 gallons of fuel, which equates to 4,136.66 gallons per day. By dividing 31,000 gallons by 4136.66 gal/day, the maximum run time is 7.49 days of operation.

The question asks: "How long is the fuel supply adequate considering the TS Basis consumption rate?"

Since the question does NOT ask for the longest or maximum time the diesels will run with the available fuel supply, ALL four answers can be considered correct (3, 4, 5 and 7 days). Under all cases, the supply of fuel oil is adequate to cover all four answers.

Therefore, this question should be deleted.

Oyster Creek recommendation: Delete this question

References: Technical Specifications, Section 3.7, Auxiliary Electrical Power, and bases. (sent previously)

not to exceed 7 days if a startup transformer is out of service. None of the engineered safety feature equipment fed by the remaining transformer may be out of service.

2. The reactor may remain in operation for a period not to exceed 7 days if 125 VDC Motor Control Center DC-2 is out of service, provided the requirements of Specification 3.8 are met.

C. Standby Diesel Generators

1. The reactor shall not be made critical unless both diesel generators are operable and capable of feeding their designated 4160 volt buses.

2. If one diesel generator becomes inoperable during power operation, repairs shall be initiated immediately and the other diesel shall be operated at least one hour every 24 hours at greater than 80% rated load until repairs are completed. The reactor may remain in operation for a period not to exceed 7 days if a diesel generator is out of service. During the repair period none of the engineered safety features normally fed by the operational diesel generator may be out of service or the reactor shall be placed in the cold shutdown condition. If a diesel is made inoperable for biennial inspection, the testing and engineered safety feature requirements described above must be met.

3. If both diesel generators become inoperable during power operation, the reactor shall be placed in the cold shutdown condition.

4. For the diesel generators to be considered operable:

A) There shall be a minimum of 14,000 gallons of diesel fuel in the standby diesel generator fuel tank,

OR

B) To facilitate inspection, repair, or replacement of equipment which would require full or partial draining of the standby diesel generator fuel tank, the following conditions must be met:

1) There shall be a minimum of 14,000 gallons of fuel oil contained in temporary tanker trucks, connected and aligned to the diesel generator fill station.

-AND-

2) The reactor cavity shall be flooded above elevation 117 feet with the spent fuel pool gates removed, or all reactor fuel shall be contained in the spent fuel pool with spent fuel pool gates installed.

AND

3) The plant shall be placed in a configuration in which the core spray system is not required to be OPERABLE.

Bases

The general objective is to assure an adequate supply of power with at least one active and one standby source of power available for operation of equipment required for a safe plant shutdown, to maintain the plant in a safe shutdown condition and to operate the required engineered safety feature equipment following an accident.

AC power for shutdown and operation of engineered safety feature equipment can be provided by any of three active (one or two 230 KV lines, one 69 KV line, and one 34.5 KV line) and either of two standby (two diesel generators) sources of power. (In applying the minimum requirement of one active and one standby source of AC power, since both 230 KV lines are on the same set of towers, either one or both 230 KV lines are considered as a single active source.) Normally all six sources are available. However, to provide for maintenance and repair of equipment and still have redundancy of power sources the requirement of one active and one standby source of power was established. The plant's main generator is not given credit as a source since it is not available during shutdown.

The plant 125V DC system consists of three batteries and associated distribution system. Batteries B and C are designated as the safety related subsystems while battery A is designated as a non-safety related subsystem. Safety related loads are supplied by batteries B and C, each with two associated full capacity chargers. One charger on each battery is in service at all times with the second charger available in the event of charger failure. These chargers are active sources and supply the normal 125V DC requirements with the batteries and standby sources. (1)

The probability analysis in Appendix "L" of the FDSAR was based on one diesel and shows that even with only one diesel the probability of requiring engineered safety features at the same time as the second diesel fails is quite small. The analysis used information on peaking diesels when synchronization was required which is not the case for Oyster Creek. Also the daily test of the second diesel when one is temporarily out of service tends to improve the reliability as does the fact that synchronization is not required.

As indicated in Amendment 18 to the Licensing Application, there are numerous sources of diesel fuel which can be obtained within 6 to 12 hours and the heating boiler fuel in a 75,000 gallon tank on the site could also be used. As indicated in Amendment 32 of the Licensing Application and including the Security System loads, the load requirement for the loss of offsite power would require 12,410 gallons for a three day supply. For the case of loss of offsite power plus loss-of-coolant plus bus failure 9790 gallons would be required for a three day supply.

In the case of loss of offsite power plus loss-of-coolant with both diesel generators starting the load requirements (all equipment operating) shown there would not be three days' supply. However, not all of this load is required for three days and, after evaluation of the conditions, loads not required on the diesel will be curtailed. It is reasonable to expect that within 8 hours conditions can be evaluated and the following loads curtailed:

1. One Core Spray Pump
2. One Core Spray Booster Pump
3. One Control Rod Drive Pump
4. One Containment Spray Pump
5. One Emergency Service Water Pump

With these pieces of equipment taken off at 8 hours after the incident it would require a total consumption of 12,840 gallons for a three-day supply. Therefore, a minimum technical specification requirement of 14,000 gallons of diesel fuel in the standby diesel generator fuel tank will exceed the engineered safety features operational requirement after an accident by approximately 9%.

During plant cold shutdown or refueling, it may be necessary to inspect, repair and replace the 15,000 gallon standby diesel generator fuel storage tank. This would require tank partial or full drain down. An alternate fuel supply configuration may be established which consists of temporary tanker trucks capable of containing 14,000 gallons. This configuration is capable of supporting continuous operation of both diesels for at least 3 days.

The temporary configuration is acceptable since a minimal power load would be required during and following a design basis condition of a loss of offsite power while the plant is in cold shutdown or refueling. Analysis shows that in the event of a tornado or seismic event which may cause a loss of offsite power and a temporary loss of the temporary EDG fuel oil supply, power can be restored before the consequences of previously analyzed conditions are exceeded.

References:

(1) Letter, Ivan R. Finfrock, Jr. to the Director of Nuclear Reactor Regulation dated April 4, 1978.

QUESTION #SRO-25

A drywell entry must be made in order to inspect for increased unidentified leakage. A plant shutdown is in progress. The following conditions exist:

- Reactor Power is 90% and decreasing
- Purging of the drywell with air is in progress in accordance with Procedure 312.9, "Primary Containment Control".
- The Chemistry Department indicated that the Stack Gas Activity should **NOT** exceed 900 CPS, based on their sample
- DRYWELL VENT-PURGE INTERLOCK BYPASS switch is in the BYPASS position (Panel 12XR)
- Venting is via the Reactor Building Ventilation System
- Stack gas activity is at 1100 CPS and slowly increasing

Your direction to the operator(s) controlling the purge in accordance with Procedure 312.9 is that they are required to:

A. Decrease the purge flow until stack gas activity decreases below 900 CPS

B. Confirm stack release rate with RAGEMS and then decrease purge flow rate.

C. Secure the primary containment purge by closing V-28-17 and V-28-18.

D. Shift the purge to go through the Standby Gas Treatment System

ANSWER: C

Question SRO 25

The question asks:

"A drywell entry must be made in order to inspect for increased unidentified leakage. A plant shutdown is in progress. The following conditions exist:

- Reactor power is 90% and decreasing
- Purging of the drywell with air is in progress in accordance with Procedure 312.9 "Primary Containment Control"
- The chemistry department indicated that Stack Gas Activity should **not** exceed 900 cps, based on their sample
- Drywell vent-purge interlock bypass switch is in the bypass position
- Venting is via the Reactor Building Ventilation System
- Stack gas activity is at 1100 cps and slowly increasing

Your direction to the operator(s) controlling the purge in accordance with Procedure 312.9 is that they are required to:" (Reference material was supplied during exam)

Step 7.2.4 of procedure 312.9 (precautions and limitations) says " . . . If the primary Containment requires venting and the potential exists for airborne activity to be higher than normal, consideration should be given to vent through the Standby Gas Treatment System." Therefore the correct answer would be "D" based on the provided references.

Step 7.3.2.6 of 312.9 (steps to depressurize the Torus) says "IF stack gas activity exceeds 1000 cps, THEN immediately SECURE the purge.

a. CLOSE Torus Vent V-28-17
b. CLOSE Torus Vent V-28-18
c. NOTIFY the OS

The suggested answer to the question was "C", to secure the primary containment purge by closing V-28-17 and V-28-18. However, this information was not available in the provided references. It is not expected for the candidates to memorize a discrete action setpoint contained within an operating procedure, especially if it is a setpoint that is not readily recognized. Candidates were not supplied section 7.3 of procedure 312.9.

The candidates were only provided sections 7.1 and 7.2 of procedure 312.9, hence they all chose the answer dealing with the above-stated precaution to vent through Standby Gas Treatment System. The answer the students chose was based upon the supplied sections of the procedure.

Therefore, answer "D" is correct based upon the provided references.

Oyster Creek recommendation: Accept "D" as the correct answer.

References: Procedure 312.9, Primary Containment (sent previously)

7.0 PURGING PRIMARY CONTAINMENT WITH AIR

7.1 Prerequisites

7.1.1 The Instrument and Service Air System is in operation in accordance with Procedure 334. [ ]

7.1.2 The Reactor Building Heating, Cooling and Ventilation System is in operation in accordance with Procedure 329. [ ]

7.1.3 The Process Radiation Monitoring System is in operation in accordance with Procedures 406.1 and 406.2. [ ]

7.1.4 The Chemistry Department has evaluated Reactor Coolant activity in accordance with procedure 829.10 step 9.3 and taken an air sample if required. If a sample is required, it has been analyzed for radioactivity and the Primary Containment atmosphere has been found satisfactory for purging via the Reactor Building Ventilation System. [ ]

7.1.5 The Stack RAGEMS is in operation in accordance with Procedure 406.8. [ ]

7.1.6 Hydrogen concentration in the Drywell has been verified to be less than 2% prior to purging. If it is greater than or equal to 2%, the Drywell must be inerted to less than 2% H_2 concentration in accordance with Procedure 312.11. The preferred method of verification is the H_2/O_2 monitor. [ ]

7.2 Precautions and Limitations

7.2.1 Drywell entries shall be controlled in accordance with Procedure 233.

7.2.2 When purging in the RUN mode, the DRYWELL VENT-PURGE INTERLOCK BYPASS switch must be in the BYPASS position (Panel 12XR).

7.2.3 Normal containment purging will be via the Reactor Building Ventilation System. Purging following the release of Reactor steam/water to the containment and subsequent Containment Isolation shall be controlled by the Emergency Operating Procedures.

7.2.4 Stack and Reactor Building Radiation Monitors shall be monitored whenever the Primary Containment is being vented. If the Primary Containment requires venting and the potential exist for airborne activity to be higher than normal, consideration should be given to vent through the Standby Gas Treatment System.

7.2.5 Primary Containment de-inerting may commence 24 hours prior to a scheduled shutdown in accordance with Tech. Spec. 3.5.A.6.

7.2.6 When Primary Containment is required, simultaneous opening of Drywell and Torus valves listed together in Groups I or II or III in the table below is prohibited. Operating with both Drywell and Torus valves open creates a pathway to bypass the Torus to Drywell Vacuum Breakers (**CM-2**).

Group		Drywell	Torus
I	N_2 Purge (12XR)	V-23-13 V-23-14	V-23-15 V-23-16
II	N_2 Makeup (12XR)	V-23-17 V-23-18	V-23-19 V-23-20
III	Ventilation Valves (Exhaust)	V-27-1 V-27-2 V-23-21 V-23-22	V-28-17 V-28-18 V-28-47

7.3 Instructions

7.3.1 **ISOLATE** nitrogen to the Drywell and Torus and **SWITCH** to 100 psig air.

7.3.1.1 **PERFORM** the following steps to isolate N_2 to the Drywell and Torus:

1. **CONFIRM** open 100 psig air supply valve V-6-166 (in Shutdown Cooling Pump Room west wall by the pumps). [ ]

2. NOTE

   The following step will cause the N2 indicator to extinguish, the AIR indicator to illuminate and the N2 COMPR FAIL (C-3-g) alarm to annunciate in the Control Room.

   SELECT AIR with the AIR/N2 selector switch at the nitrogen compressors. [ ]

3. **OPEN** Nitrogen Compressor #1 local disconnect switch. [ ]

4. **OPEN** Nitrogen Compressor #2 local disconnect switch. [ ]

5. **CLOSE** the following nitrogen valves:

   - Nitrogen Compressor #1 Supply Valve V-23-1002. [ ]
   - Nitrogen Compressor #2 Supply Valve V-23-1001. [ ]
   - Nitrogen Compressor #1 Discharge Valve V-23-170. [ ]
   - Nitrogen Compressor #2 Discharge Valve V-23-171. [ ]
   - Nitrogen Receiver Discharger Valve V-23-169. [ ]

6. **OPEN** the Nitrogen Receiver Drain Valve V-23-177 and completely **VENT** the receiver. [ ]

7.3.1.2 **TRANSFER** purge gas to the TIP tubes from nitrogen to air as follows:

1. **OPEN** the instrument air supply to the TIP indexers V-6-1321. (Tip Drive Room) [ ]
2. **CLOSE** the nitrogen supply to the TIP indexers V-23-163. (Tip Drive Room) [ ]
3. **ADJUST** Pressure Regulating Valve V-23-69 to obtain 0.8 to 1.2 as read on DPI-23-278 (RB 23'). [ ]

7.3.1.3 **CONFIRM** closed the following nitrogen makeup and purge valves (Panel 12XR):

- DRYWELL N2 MAKEUP V-23-17 [ ]
- DRYWELL N2 MAKEUP V-23-18 [ ]
- DRYWELL N2 PURGE PRESSURE CONTROL V-23-13 [ ]
- DRYWELL N2 PURGE SHUTOFF V-23-14 [ ]
- TORUS N2 MAKEUP V-23-19 [ ]
- TORUS N2 MAKEUP V-23-20 [ ]
- TORUS N2 PURGE PRESSURE CONTROL V-23-15 [ ]
- TORUS N2 PURGE SHUTOFF V-23-16 [ ]

7.3.1.4 **PLACE** the Drywell Oxygen Analyzer and Torus Oxygen Analyzer Sample Pump in service in accordance with Procedure 312.7. [ ]

7.3.1.5 **CONFIRM** CNTMT VENT AND PURGE ISOLATION BYPASS switch (lower left side) in NORMAL position (Panel 11F). [ ]

7.3.2 **DEPRESSURIZE** the Torus as follows:

1. **CONFIRM** closed Drywell Vent and Bypass valves:
   - V-23-21 [ ]
   - V-23-22 [ ]
   - V-27-1 [ ]
   - V-27-2 [ ]
2. IF the REACTOR MODE SELECTOR switch is in the RUN position,

   THEN **PLACE** DRYWELL VENT-PURGE INTERLOCK BYPASS switch in BYPASS position (Panel 12XR). [ ]
3. **OPEN** Torus Vent valves (Panel 11F):
   - V-28-17 [ ]
   - V-28-18 [ ]
4. **MONITOR** the following:
   - Reactor Building ventilation exhaust activity (Panel 10F)
   - stack gas activity (Panel 10F)
   - stack gas activity (Panel 1R)

5. **MARK** the time the depressurization was started on the stack gas recorder (Panel 10F). [ ]

6. IF stack gas activity exceeds 1000 cps,

   THEN immediately **SECURE** the purge:

   a. **CLOSE** Torus Vent V-28-17 [ ]

   b. **CLOSE** Torus Vent V-28-18 [ ]

   c. **NOTIFY** the OS [ ]

7. **VERIFY** Torus pressure is approximately zero as indicated on the pressure recorder (Panel 12XR). [ ]

8. **CLOSE** Torus Vent valves (Panel 11F):

   - V-28-17 [ ]
   - V-28-18 [ ]

7.3.3 **DEPRESSURIZE** the Drywell as follows:

1. **CONFIRM** closed Torus Vent and Bypass valves (Panel 11F):

   - V-28-17 [ ]
   - V-28-18 [ ]
   - V-28-47 [ ]

2. IF the REACTOR MODE SELECTOR switch is in the RUN position,

   THEN **PLACE** the DRYWELL VENT-PURGE INTERLOCK BYPASS switch in BYPASS position (Panel 12XR). [ ]

3.

> CAUTION
>
> Torus and Drywell pressure must be monitored while purging the Drywell. This ensures a positive ΔP is maintained between Drywell and Torus to prevent opening the Torus to Drywell vacuum breakers.

OPEN Drywell Vent valves (Panel 11F):

- V-27-1 [ ]
- V-27-2 [ ]

4. IF while Drywell purging is in progress, Torus pressure increases sufficiently to approach the opening of the Torus to Drywell vacuum breakers,

   THEN **PERFORM** the following:

   a. **CLOSE** Drywell Vent valves:

      - V-27-1 [ ]
      - V-27-2 [ ]

   b. **RETURN** to Step 7.3.2 to purge the Torus. [ ]

5. **MONITOR** the following:

   a. Reactor Building ventilation exhaust activity (Panel 10F)

   b. Stack gas activity (Panel 1R)

6. **MARK** the time the depressurization was started on the stack gas recorder (Panel 10F). [ ]

7. IF stack gas activity exceeds 1000 cps,
   THEN immediately **SECURE** the purge:
   a. **CLOSE** Drywell Vent V-27-1. [ ]
   b. **CLOSE** Drywell Vent V-27-2. [ ]
   c. **NOTIFY** the OS. [ ]
8. WHEN the drywell pressure is approximately 0 psi,
   THEN **CLOSE** Drywell Vent valves (Panel 11F):
   - V-27-1 [ ]
   - V-27-2 [ ]

7.3.4

> NOTE
>
> Steps 7.3.4, 7.3.5, 7.3.6, and 7.3.7 can be performed in any order as determined by the OS.

PURGE the Drywell with air as follows:

1. WHEN Drywell pressure has been reduced to approximately zero as indicated on the pressure recorder on Panel 12XR,
   THEN **PERFORM** the following:
   a. **CONFIRM** closed Torus Vent and Bypass valves (Panel 11F):
      - V-28-17 [ ]
      - V-28-18 [ ]
      - V-28-47 [ ]

b. **OPEN** the following valves:

- MAIN SUPPLY HEADER VALVES TO DW V-28-42 and V-28-43 (Panel 11R) [ ]
- DW PURGE V-27-3 [ ]
- DW PURGE V-27-4 [ ]
- DW VENT V-27-1 [ ]
- DW VENT V-27-2 [ ]

7.3.5 **SECURE** the Nitrogen Purge System as follows:

1. **CLOSE** Grove Reducer Pressure Regulator V-23-234 or V-23-235 by turning its stem fully counter clockwise. [ ]
2. **CLOSE** Nitrogen Vaporizer Supply Valve V-23-268. [ ]
3. **CLOSE** Thermostatic Control Valve Inlet Valve V-23-186. [ ]
4. **CLOSE** Thermostatic Control Valve Outlet Valve V-23-187. [ ]
5. **CLOSE** Inlet to #1 Grove Reducer Valve V-23-189. [ ]
6. **CLOSE** Inlet to #2 Grove Reducer Valve V-23-190. [ ]
7. **CLOSE** Outlet from #1 Grove Reducer Valve V-23-191. [ ]
8. **CLOSE** Outlet from #2 Grove Reducer Valve V-23-192. [ ]
9. **PLACE** the Nitrogen Vaporizer Power Control Switch to the STOP position. [ ]
10. **PLACE** the selected heater power control switch to OFF. [ ]

11. **PLACE** the following power circuit breaker switches to the OFF position:

    - HTR-854-165 [ ]
    - HTR-854-166 [ ]
    - M-23-1 [ ]

12. **OPEN** N2 Purge Line Drain Valve V-23-143. (Outside Reactor Building NE corner). [ ]

13. **OPEN** Purge Header Drain Trap Inlet Valve V-23-263. (Reactor Building NE Stairwell). [ ]

14. **OPEN** Purge Header Drain Trap Vent Valve V-23-362. (Reactor Building NE Stairwell). [ ]

15. **PERFORM** the Nitrogen System Shutdown Valve Lineup, Attachment 312.11-3. [ ]

7.3.6 WHEN Primary Containment is **no** longer required,

THEN **PURGE** the Torus as follows:

1. **OPEN** Torus Vent valves:

    - V-28-17 [ ]
    - V-28-18 [ ]

2. **OPEN** Reactor Bldg to Torus Vacuum Breaker valves (Panel 11F):

    - V-26-16 [ ]
    - V-26-18 [ ]

3. **BLOCK OPEN** Reactor Bldg to Torus Vacuum Breaker valves:
   - V-26-15 [ ]
   - V-26-17 [ ]
4. **COMPLETE** Attachment 312.9-6, Reactor Building to Torus Vacuum Breaker Control Sheet. [ ]

7.3.7 WHEN Primary Containment is required,

THEN **PURGE** the Torus as follows:

1. **VERIFY** temporary modification is installed in accordance with Attachment 312.9-8. [ ]
2. **VERIFY** Breathing Air System is in service in accordance with Procedure 334.1. [ ]
3. **CONFIRM** closed Drywell Vent and Bypass valves:
   - V-27-1 [ ]
   - V-27-2 [ ]
   - V-23-21 [ ]
   - V-23-22 [ ]
4. **OPEN** Torus Vent valves:
   - V-28-17 [ ]
   - V-28-18 [ ]

5. **CONFIRM** closed Drywell N_2 Purge valves (Panel 12XR):

   - V-23-13 [ ]
   - V-23-14 [ ]

6. **OPEN** Torus N_2 Purge valves (Panel 12XR):

   - V-23-15 [ ]
   - V-23-16 [ ]

7. **CLOSE** valve V-23-357. [ ]

8. **CLOSE** valve V-23-224. [ ]

9. **OPEN** valve V-23-356. [ ]

10. NOTE

    Torus and Drywell pressure must be monitored when breathing air is being supplied to the Torus. This ensures a positive DP is maintained between Drywell and Torus to prevent opening the Torus to Drywell vacuum breakers.

    THROTTLE open valve V-44-284. [ ]

11. IF Torus pressure increases to 0.5 psi greater than Drywell pressure,

    THEN **THROTTLE** closed valve V-44-284 until Torus pressure decreases below Drywell pressure. [ ]

12. **PURGE** the Torus in this manner until desired oxygen level is reached. [ ]

13. **CLOSE** valve V-44-284. [ ]

14. **CLOSE** valve V-23-356. [ ]

15. **OPEN** valve V-23-224. [ ]

16. **OPEN** valve V-23-357. [ ]

17. **CLOSE** Torus N_2 Purge valves (Panel 12XR):

    - V-23-15 [ ]
    - V-23-16 [ ]

18. **CLOSE** Torus Vent valves:

    - V-28-17 [ ]
    - V-28-18 [ ]

7.3.8 WHEN the atmosphere is acceptable for Drywell entry as monitored by portable O_2 sampling equipment,

THEN **MAINTAIN** an air purge at all times while the Drywell and Torus are open for entry by the following valves being OPEN (Panels 11F and 11R):

- MAIN SUPPLY HEADER VALVES TO DW V-28-42 and V-28-43
- DW PURGE V-27-3
- DW PURGE V-27-4
- DW VENT V-27-1
- DW VENT V-27-2

7.3.9 WHEN the MODE switch is **no** longer in the RUN position,

THEN **PLACE** the DRYWELL VENT-PURGE INTERLOCK BYPASS switch in NORMAL position (Panel 12XR). [ ]

7.3.10 **MAINTAIN** Drywell and Torus ventilation in accordance with Procedure 233, Drywell Access and Control.

8.0 DRYWELL COOLER FAN OPERATION

8.1 Prerequisites

8.1.1 Reactor Building Closed Cooling Water System (RBCCW) is operating in accordance with Procedure 309.2. [ ]

8.1.2 480 Volt Electrical System is operating in accordance with Procedure 338. [ ]

8.1.3 MCC 1A23 and MCC 1B23 are energized in accordance with Attachment 312.9-1. [ ]

8.2 Precautions and Limitations

8.2.1 Four Drywell Recirculation Fans should be in operation at all times. If Drywell ventilation must be reduced during Reactor operation, closely monitor Drywell pressure (Panel 12XR) and adjust pressure in accordance with Procedure 312.11.

8.3 Instructions

8.3.1 **PLACE** the Drywell Recirculation Fans in operation as follows:

8.3.1.1 **OPEN** the following valves (Panel 1F/2F):

- CCW INLET ISOLATION V-5-147 [ ]
- CCW INLET ISOLATION V-5-167 [ ]
- DRYWELL CLG SHUT-OFF V-5-148 [ ]
- CCW OUTLET ISOLATION V-5-166 [ ]