AECL EACL

Technical Description

ACR-700 Technical Description

ACR-700

10810-01371-TED-001
Revision 1

Prepared by
Rédigé par

J. Pyoi
ACR Configuration Management

E.D. Wessman, Section Head
ACR Configuration Management

E.Y.H. Choy, Manager
ACR Module & Configuration

M.M. Elgohary, Manager
ACR Civil & Layout

J.W.F. Millard, Manager
ACR Reactor & Fuel Handling

K.F. Hau, Manager
ACR Process Systems

A. Josefowicz, Manager
ACR Instrumentation & Electrical

M. Jankovic, Manager
ACR Computer Control

R. Jaitly, Manager
ACR PSA & Safety Design

Prepared by
Rédigé par

R. Aboud, Manager
ACR Thermal Hydraulics

P. Chan, Team Leader
ACR Physics & Fuel

for N. Popov, Manager
ACR Canadian Licensing

A. Khan, Manager
ACR Product Enhancement

Reviewed by
Vérifié par

K. Wittann, Manager
ACR NSP Engineering

M. Bonechi, Manager
ACR Safety Engineering

Approved by
Vérifié par

S.K.W. Yu, Program Manager
ACR Product Development

2004 March | Mars 2004

CONTROLLED - Licensing | CONTRÔLÉ - Permis

© Atomic Energy of Canada Limited | © Énergie atomique du Canada limitée

2251 Speakman Drive
Mississauga, Ontario
Canada L5K 1B2

2251, rue Speakman
Mississauga (Ontario)
Canada L5K 1B2

AECL EACL

Technical Description

ACR-700 Technical Description

ACR-700

10810-01371-TED-001
Revision 1

2004 March

CONTROLLED - Licensing

This document and the information contained in it is made available for licensing review. All rights reserved by Atomic Energy of Canada Limited. No part of this document may be reproduced or transmitted in any form or by any means, including photocopying and recording, without the written permission of the copyright holder, application for which should be addressed to Atomic Energy of Canada Limited. Such written permission must also be obtained before any part of this document is stored in a retrieval system of any nature.

© Atomic Energy of Canada Limited

2251 Speakman Drive
Mississauga, Ontario
Canada L5K 1B2

Mars 2004

CONTRÔLÉ - Permis

Le présent document et l'information qu'il contient sont disponibles pour examen en vue de l'obtention des permis. Tous droits réservés par Énergie atomique du Canada limitée. Il est interdit de reproduire ou de transmettre, par quelque procédé que ce soit, y compris de photocopier ou d'enregistrer, toute partie du présent document, sans une autorisation écrite du propriétaire du copyright obtenue auprès d'Énergie atomique du Canada limitée. De plus, on doit obtenir une telle autorisation avant qu'une partie du présent document ne soit intégrée dans un système de recherche documentaire de quelque nature que ce soit.

© Énergie atomique du Canada limitée

2251, rue Speakman
Mississauga (Ontario)
Canada L5K 1B2

AECL EACL

Release and Revision History / Liste des documents et des révisions

0939B Rev. 13

Document Details / Détails sur le document

Title / Titre	Total no. of pages / N^bre total de pages
ACR-700 Technical Description	

CONTROLLED - Licensing / CONTRÔLÉ - Permis

Release and Revision History / Liste des documents et des révisions

Release Document No./N°	Release Document Date	Revision Révision No./N°	Revision Révision Date	Purpose of Release; Details of Rev./Amendement / Objet du document; détails des rév. ou des modif.	Prepared by / Rédigé par	Reviewed by / Examiné par	Approved by / Approuvé par
1		D1	2003/05/26	Issued for internal review.	R. Guduri E.Y.H. Choy M.M. Elgohary J.W.F. Millard K.F. Hau A. Josefowicz S.D. Nam E.W. Wessman	J.W. Love M. Bonechi S.K.W. Yu J. Hopwood V.G. Snell M. Pakan B. Shalaby K. Hedges	
2		0	2003/06/27	Issued as “Approved for Use”.	K. Sapple E.Y.H. Choy M.M. Elgohary H.S. Johal J.W.F. Millard K.F. Hau A. Josefowicz E.D. Wessman	J.W. Love M. Bonechi V.G. Snell	S.K.W. Yu

DCS/RMS Input / Données SCD ou SGD

Rel. Proj. / Proj. conn.	Project / Projet	SI	Section	Serial / Série	Sheet / Feuille No. / N°	Of / De	Unit No.(s) / Tranche n°
	10810	01371	TED	001	1	1	

AECL EACL

Release and Revision History / Liste des documents et des révisions

0939B Rev. 13

Document Details / Détails sur le document

Title / Titre	Total no. of pages / N^bre total de pages
ACR-700 Technical Description	

CONTROLLED - Licensing / CONTRÔLÉ - Permis

Release and Revision History / Liste des documents et des révisions

Release Document No./N°	Release Document Date	Revision Révision No./N°	Revision Révision Date	Purpose of Release; Details of Rev./Amendement Objet du document; détails des rév. ou des modif.	Prepared by Rédigé par	Reviewed by Examiné par	Approved by Approuvé par
3		1D1	2004/03/02	Incorporated changes according to the following CR's: - Increase Reactor Building Diameter From 38 m to 39.5 m - Increase Feeder Header Layout to Reduce Stress - Flow Restrictors in SG Steam Outlet Nozzles(Generic ACR Change) - Classification of Events for Design and Analysis - Modular Concrete Reactor Vault - Increase number of channels - New Bore Closure Seal Element -NCR - Flow Restrictors in SG Steam Outlet Nozzles (ACR US driven Change) - Steam Generator Blowdown Recovery - Improve Purification Half-life (reduce from 90 minutes to 60 minutes) With High Bleed Flow - Change of End Fittings /Feeder connection from welded to bolted - RCW/RSW Design Optimization - Optimization of Chilled water System - Large Pressurizer Size to Increase Operating Margin - Switch to All SS Feeders	J. Pyoli R. Hunter E.D. Wessman E.Y.H. Choy M.M. Elgohary J.W.F. Millard K.F. Hau A. Josefowicz M. Jankovic R. Jaitly R. Aboud P. Chan N. Popov A. Khan	K. Wittann M. Bonechi V.G. Snell	S.K.W. Yu

DCS/RMS Input / Données SCD ou SGD

Rel. Proj. Proj. conn.	Project Projet	SI	Section	Serial Série	Sheet Feuille No. N°	Of De	Unit No.(s) Tranche n°
	10810	01371	TED	001	1	1	

AECL EACL

Release and Revision History / Liste des documents et des révisions

0939B Rev. 13

Document Details / Détails sur le document

Title / Titre	Total no. of pages / N^bre total de pages
ACR-700 Technical Description	

CONTROLLED - Licensing / CONTRÔLÉ - Permis

Release and Revision History / Liste des documents et des révisions

Release Document No./N°	Release Document Date	Revision Révision No./N°	Revision Révision Date	Purpose of Release; Details of Rev./Amendement Objet du document; détails des rév. ou des modif.	Prepared by Rédigé par	Reviewed by Examiné par	Approved by Approuvé par
				- RB Ventilation Isolation - Location of Unit 2 MOT,UST,SST - Spent Fuel Bay/Dry Storage Cooling - Fuel Channel Internals - Implementation of Fuel Support Plug - Re-Location of Local Air Coolers (LACs) Also incorporated various editorial changes. Refer to change report spreadsheet for full details. Issued for interal review.			
4		1	2004/03/31	Issued as “Approved for Use”.	J. Pyoli R. Hunter E.D. Wessman E.Y.H. Choy M.M. Elgohary J.W.F. Millard K.F. Hau A. Josefowicz M. Jankovic R. Jaitly R. Aboud P. Chan N. Popov A. Khan	K. Wittann M. Bonechi	S.K.W. Yu

DCS/RMS Input / Données SCD ou SGD

Rel. Proj. Proj. conn.	Project Projet	SI	Section	Serial Série	Sheet Feuille No. N°	Of De	Unit No.(s) Tranche n°
	10810	01371	TED	001	1	1	

TABLE OF CONTENTS

SECTION **PAGE**

1. INTRODUCTION AND SUMMARY DESCRIPTION 1-1

1.1 Introduction 1-1
1.2 Background 1-2
1.3 General Plant Description 1-5
1.3.1 Unit Power Output 1-5
1.3.2 Technical Data 1-6
1.3.3 Building and Structures 1-8
1.3.4 Reactor and Process Systems 1-11
1.3.5 Electrical Power Systems 1-16
1.3.6 Instrumentation and Control 1-16
1.3.7 Balance of Plant 1-17
1.3.8 Safety Systems 1-17
1.3.9 Safety Support Systems 1-19
1.3.10 Radioactive Waste Management Systems 1-20
1.4 Reference Site Characteristics 1-22
1.4.1 Site Design Data 1-22
1.4.2 Cooling Water 1-22
1.4.3 Design Basis Earthquake 1-22
1.4.4 Site Design Earthquake 1-23
1.4.5 Tornado Protection 1-23
1.4.6 Exclusion Zone 1-23

2. DESIGN APPROACH 2-1

2.1 Safety and Licensing 2-1
2.1.1 Licensing Basis 2-1
2.1.2 ACR Safety Characteristics 2-1
2.1.3 Separation of Safety Features and Protection against Common Cause Events 2-2
2.1.4 Licensing Process 2-3
2.1.5 Regulatory Documents 2-3
2.1.6 Requirements of the International Atomic Energy Agency (IAEA) 2-4
2.1.7 Safeguards 2-4
2.1.8 Security 2-5
2.1.9 Safety Design Requirements 2-5
2.1.10 Safety Analysis Requirements 2-8
2.2 Quality Assurance 2-22
2.3 Plant Layout 2-23
2.3.1 General 2-23
2.3.2 Layout Approach 2-25
2.3.3 Orientation and Elevations 2-25
2.4 Construction Methods 2-27

TABLE OF CONTENTS

SECTION **PAGE**

2.4.1 Open Top Construction 2-31
2.4.2 Parallel Construction 2-31
2.4.3 Prefabrication / Modularization 2-31
2.4.4 Up-to-Date Construction Technologies 2-32
2.4.5 Building Construction 2-32
2.4.6 Module Implementation Strategy 2-35
2.5 Human Factors Engineering 2-37
2.6 Radioactive Waste Management 2-38
2.6.1 General 2-38
2.6.2 Solid Radioactive Waste Management System 2-38
2.6.3 Liquid Radioactive Waste Management System 2-39
2.6.4 Gaseous Radioactive Waste Management System 2-40
2.7 Operation & Maintenance 2-41
2.7.1 Summary 2-41
2.7.2 Design Improvements for Operational Performance 2-41
2.7.3 O&M Cost Improvements 2-43
2.8 Radiation Protection & Zoning 2-45
2.8.1 Radiation Protection 2-45
2.8.2 Zoning 2-46
2.8.3 Building Zones 2-47
2.9 References 2-49

3. BUILDINGS AND STRUCTURES 3-1

3.1 Reactor Building 3-1
3.1.1 General 3-1
3.1.2 Design Bases 3-2
3.1.3 Description 3-4
3.2 Reactor Auxiliary Building 3-18
3.2.1 Design Bases 3-18
3.2.2 Description 3-21
3.3 Turbine Building 3-25
3.3.1 Design Bases 3-25
3.3.2 Description 3-26
3.4 Main Control Building 3-30
3.4.1 Design Bases 3-30
3.4.2 Description 3-30
3.5 Service Building 3-32
3.5.1 Design Bases 3-32
3.5.2 Description 3-32
3.6 Maintenance Building 3-33
3.6.1 Design Bases 3-33
3.6.2 Description 3-33
3.7 Cooling Water Structures 3-35

TABLE OF CONTENTS

SECTION		PAGE
3.7.1	Condenser Cooling Water Pumphouse	3-35
3.7.2	Raw Service Water Pumphouse	3-35
3.8	Diesel Generator Buildings	3-36
3.8.1	NSP Diesel Generator Building	3-36
3.8.2	BOP Diesel Generator Building	3-36
3.9	Auxiliary Buildings and Structures	3-37
4.	REACTOR	4-1
4.1	Reactor Assembly	4-1
4.1.1	Calandria Assembly	4-1
4.1.2	Fuel Channel Assembly	4-5
4.1.3	Reactivity Control Units	4-12
4.2	Fuel Design	4-26
4.2.1	Design Bases	4-26
4.2.2	Design Description	4-27
4.2.3	Fuel Management	4-28
4.3	Nuclear Design	4-30
4.3.1	Design Bases	4-30
4.3.2	Design Description	4-36
4.4	Thermal Hydraulic Design	4-63
4.4.1	Design Bases	4-63
4.4.2	Thermal and Hydraulic Design of the Reactor Core	4-64
4.4.3	Testing and Verification	4-65
5.	REACTOR PROCESS SYSTEMS	5-1
5.1	Heat Transport System	5-1
5.1.1	Design Bases	5-1
5.1.2	Design Description	5-2
5.1.3	Heat Transport System Pressure Boundary Design	5-5
5.1.4	HTS Component Design	5-10
5.2	Heat Transport Auxiliary Systems	5-21
5.2.1	Pressure and Inventory Control System	5-21
5.2.2	Heat Transport Purification System	5-25
5.2.3	Heat Transport Pump Seal System	5-26
5.2.4	H_2O Leakage Collection System	5-28
5.2.5	Steam and Feedwater System	5-29
5.3	Moderator Systems	5-41
5.3.1	Design Bases	5-41
5.3.2	Design Description	5-42
5.3.3	Component Description	5-44
5.4	Moderator Auxiliary Systems	5-47
5.4.1	Moderator Purification System	5-47

TABLE OF CONTENTS

SECTION **PAGE**

5.4.2 Moderator Cover Gas System 5-49
5.4.3 Moderator Liquid Poison System 5-51
5.4.4 Moderator D_2O Collection 5-53

6. SAFETY SYSTEMS 6-1

6.1 General 6-1
6.1.1 Design Bases 6-2
6.1.2 Summary Descriptions 6-4
6.2 Shutdown System No. 1 (SDS1) 6-7
6.2.1 Design Bases 6-7
6.2.2 System Description 6-9
6.2.3 Component Description 6-10
6.3 Shutdown System No. 2 (SDS2) 6-11
6.3.1 Design Bases 6-11
6.3.2 System Description 6-12
6.3.3 Component Description 6-13
6.4 Emergency Core Cooling System 6-15
6.4.1 Emergency Coolant Injection System 6-15
6.4.2 Long Term Cooling System 6-21
6.5 Containment 6-27
6.5.1 Containment Envelope 6-27
6.5.2 Design Bases 6-27
6.5.3 System Description 6-31
6.5.4 Safety Aspects 6-39
6.6 Fission Product Removal and Control 6-48
6.7 In-service Inspection and Testing 6-50
6.7.1 In-Service Inspection 6-50
6.7.2 In-Service Testing 6-52

7. INSTRUMENTATION AND CONTROL 7-1

7.1 Introduction 7-1
7.1.1 Identification of Safety Related Instrumentation and Control 7-1
7.1.2 Identification of Safety Design Requirements 7-3
7.2 Safety Systems 7-4
7.2.1 Shutdown System No. 1 (SDS1) 7-4
7.2.2 Shutdown System No. 2 (SDS2) 7-13
7.2.3 Emergency Core Cooling System 7-21
7.2.4 Containment System Instrumentation and Controls 7-24
7.3 Requirements for Safe Shutdown 7-32
7.3.1 Systems Required for Safe Shutdown 7-32
7.3.2 Means for Reducing Reactor Power 7-33
7.3.3 Guaranteed Shutdown State 7-35

TABLE OF CONTENTS

SECTION		PAGE
7.3.4	Cooldown and Heat Removal after a Reactor Power Reduction	7-35
7.4	Other Safety Related Systems	7-37
7.4.1	Reserve Water System	7-37
7.4.2	Main Steam Isolation Valves (MSIVs)	7-37
7.4.3	Safety Related Interlocks	7-38
7.4.4	Steam Generator Second Crash Cooldown System	7-39
7.4.5	Shield Cooling System	7-39
7.5	Control Systems Not Required for Safety	7-40
7.5.1	Reactor Regulating System (RRS)	7-40
7.5.2	Overall Plant Control System	7-47
7.5.3	Turbine Generator Control	7-53
7.5.4	Steam Generator Pressure and Level Control	7-53
7.5.5	HTS Pressure and Inventory Control	7-54
7.5.6	Core Monitoring Instrumentation	7-55
7.5.7	Process Instrumentation - General	7-57
7.6	Control Areas and Control Computers	7-60
7.6.1	Main Control Area	7-60
7.6.2	Secondary Control Area	7-63
7.6.3	Control Computers	7-63
7.6.4	Safety Related Display Information	7-69
8.	ELECTRICAL POWER SYSTEMS	8-1
8.1	Overall Design Basis Criteria	8-1
8.2	Power Classification	8-1
8.3	Redundancy	8-2
8.4	Offsite Power System	8-2
8.4.1	System Functions	8-3
8.4.2	High Voltage Grid Switchyard Description	8-3
8.5	Onsite Power System	8-4
8.5.1	22 kV System	8-4
8.5.2	Generator Load-Break Switch*	8-6
8.5.3	Main Output Transformer	8-6
8.5.4	System Service Transformer	8-7
8.5.5	Unit Service Transformer	8-7
8.6	Normal Power Sources	8-8
8.6.1	General	8-8
8.6.2	Transfer Systems	8-8
8.6.3	Electrical Power System Station Services	8-9
8.6.4	Electric Circuit Protection Systems	8-9
8.7	Diesel-Generator	8-10
8.7.1	General	8-10
8.7.2	Diesel-Generator Protection	8-10
8.7.3	Fuel System	8-11

TABLE OF CONTENTS

SECTION		PAGE
8.7.4	Starting System	8-11
8.7.5	Lubrication System	8-11
8.7.6	Cooling Water System	8-11
8.7.7	Combustion Air and Exhaust System	8-12
8.7.8	Periodic Testing and Synchronization	8-12
8.8	Unit Service Distribution	8-12
8.8.1	13.8 kV, 4.16 kV (Typical) Distribution	8-12
8.8.2	Secondary Distribution	8-13
8.9	Uninterruptible Power Supplies	8-16
8.9.1	Uninterruptible Class II Supplies	8-16
8.9.2	Uninterruptible Class I Direct Current Supplies	8-16
8.10	Motors	8-17
8.10.1	Medium Voltage Motors	8-17
8.10.2	575 V Motors	8-18
8.11	Tests for Electrical Equipment	8-18
8.12	Lighting	8-18
8.13	Cabling System	8-19
8.13.1	Introduction	8-19
8.13.2	Power Cables	8-19
8.13.3	Control and Instrumentation Cables	8-20
8.13.4	Cable Routing and Separation	8-20
8.14	Containment Penetrations	8-20
8.15	Fire Protection for Cable System	8-21
8.16	Auxiliary Electrical System	8-21
8.16.1	Grounding	8-21
8.16.2	Lightning Protection	8-21
9.	AUXILIARY AND SERVICE SYSTEMS	9-1
9.1	Safety Support Systems	9-1
9.2	Water Systems	9-3
9.2.1	General Description	9-3
9.2.2	Service Water Systems	9-3
9.2.3	Demineralized Water System	9-9
9.2.4	Domestic Water System	9-9
9.2.5	Chilled Water System	9-9
9.2.6	Ultimate Heat Sink	9-10
9.2.7	Reserve Water System	9-11
9.3	Fuel Storage and Handling	9-15
9.3.1	Introduction	9-15
9.3.2	New Fuel Storage and Handling	9-17
9.3.3	Spent Fuel Handling and Storage	9-19
9.3.4	Fuel Changing System	9-25
9.3.5	Maintenance and Servicing	9-31

TABLE OF CONTENTS

SECTION		PAGE
9.3.6	Equipment Testing	9-32
9.3.7	Fuel Handling Control System	9-33
9.4	Fire Protection System	9-37
9.4.1	Design Bases	9-37
9.4.2	Fire Protection Design	9-38
9.5	Process Auxiliary Systems	9-44
9.5.1	Compressed Air and Gas Systems	9-44
9.5.2	Drainage Systems	9-45
9.5.3	H_2O/D_2O Sampling Systems	9-47
9.5.4	Chemical Control of Systems	9-50
9.5.5	Annulus Gas System	9-53
9.5.6	Shield Cooling System	9-54
9.5.7	Resin Transfer System	9-56
9.5.8	Deuteration System	9-58
9.6	Heating and Ventilation and Air Conditioning	9-68
9.6.1	Reactor Building	9-68
9.6.2	Reactor Auxiliary Building HVAC System	9-72
9.6.3	Service Building and Maintenance Building HVAC Systems	9-75
9.6.4	Main Control Building Air Conditioning	9-76
9.6.5	Turbine Building Heating and Ventilation System	9-77
9.6.6	CCW Pumphouse, RSW Pumphouse, and Fire Water Pumphouse Heating and Ventilation Systems	9-78
9.6.7	Auxiliary Boiler Building, Water Treatment Plant, and Diesel Generator Buildings HVAC Systems	9-79
9.7	Water Management	9-81
9.7.1	Heavy Water Management	9-81
9.7.2	Light Water Supply System	9-86
9.8	Other Auxiliary Systems	9-88
9.8.1	Spent Fuel Bay Cooling and Purification System	9-88
10.	TURBINE GENERATOR AND AUXILIARIES	10-1
10.1	General	10-1
10.2	Turbine-Generator	10-3
10.2.1	Design Bases	10-3
10.2.2	Turbine-Generator Description	10-3
10.3	Main Steam Supply	10-8
10.4	Condensing System	10-9
10.4.1	Main Condenser	10-9
10.4.2	Main Condenser Air Extraction System	10-10
10.4.3	Turbine Gland Seal System	10-11
10.4.4	Turbine Bypass System	10-11
10.5	Feedwater System	10-13
10.6	Condensate System	10-14

TABLE OF CONTENTS

SECTION		PAGE
10.6.1	Design Bases	10-14
10.6.2	System Description	10-14
10.6.3	Tests and Inspection	10-14
10.7	Condensate Make-up and Reject System	10-16
10.7.1	Design Bases	10-16
10.7.2	System Description	10-16
10.8	Moisture Separator/Reheater Drains	10-17
10.8.1	Design Bases	10-17
10.8.2	System Description	10-17
10.9	Auxiliary Systems	10-18
10.9.1	General	10-18
10.9.2	Sampling System	10-18
10.9.3	Steam Drain System	10-19
10.9.4	Chemical Injection System	10-19
10.9.5	Condenser Circulating Water System	10-19
11.	RADIOACTIVE WASTE MANAGEMENT	11-1
11.1	General	11-1
11.1.1	Decontamination Facilities	11-2
11.1.2	Decontamination Practice	11-2
11.2	Radioactive Materials Sources and Pathways	11-3
11.2.1	Source Terms	11-3
11.3	Solid Radioactive Waste Management	11-7
11.3.1	Types and Sources of Wastes	11-7
11.3.2	Spent Fuel	11-8
11.3.3	Spent Resin	11-8
11.3.4	Spent Filter Cartridges	11-9
11.3.5	Non-Combustible and Combustible Wastes	11-10
11.3.6	Organic Fluids, Oil, Chemicals, etc.	11-10
11.3.7	Solid Radioactive Waste Storage Facility	11-11
11.3.8	Interim Fuel Storage Facility	11-11
11.4	Liquid Radioactive Waste Management System	11-13
11.4.1	Design Bases	11-14
11.4.2	Design Description	11-14
11.4.3	Liquid Waste Decontamination Facility	11-16
11.5	Gaseous Radioactive Waste Management	11-17
11.5.1	Gaseous Waste Control	11-17
11.6	Effluent Radiological Monitoring	11-19
11.6.1	Liquid Effluent Monitoring System	11-19
11.6.2	Gaseous Effluent Monitoring System	11-20
11.6.3	Containment Monitoring	11-22
11.7	Environmental Monitoring	11-23
11.8	References	11-24

TABLE OF CONTENTS

SECTION		PAGE
12.	RADIATION PROTECTION	12-1
12.1	Objectives	12-1
12.2	Design Control Program for Radiation Exposure	12-2
12.2.1	ALARA Application in Design Process	12-2
12.2.2	Methodology for Radiation Exposure Control	12-2
12.2.3	Dose Rate Statistics	12-2
12.3	Radiation Sources	12-4
12.3.1	Heat Transport System	12-4
12.3.2	Moderator System	12-5
12.3.3	Moderator Cover Gas System	12-5
12.3.4	Fuel Handling System	12-5
12.3.5	Spent Fuel Bay Systems	12-5
12.3.6	Shield Cooling System	12-6
12.3.7	Annulus Gas System	12-6
12.3.8	Off-Gas Management System	12-6
12.3.9	D_2O Clean-Up System	12-6
12.3.10	Spent Resin Storage Vaults	12-7
12.3.11	Radioactive Liquid Waste Management System	12-7
12.4	Radiation Protection Design Features	12-8
12.4.1	Equipment and Component Design Features	12-8
12.4.2	Facility Design Features	12-9
12.4.3	Shielding	12-10
12.4.4	Layout	12-13
12.4.5	Monitoring Equipment	12-14
12.4.6	Airborne Contamination Control	12-19
12.5	Health Physics Program	12-22
12.6	Occupational Radiation Exposures	12-23
12.7	References	12-24
13.	UNIT DATA	13-1
13.1	Introduction	13-1
13.2	Nuclear Steam Plant and Balance of Plant Data	13-1
13.2.1	ASI (AECL Subject Index)	13-1
13.2.2	Applicable Codes and Standards	13-2
13.3	Shared Facilities and Systems	13-3
13.3.1	Shared Facilities	13-3
13.3.2	Shared Systems	13-3

TABLE OF CONTENTS

SECTION **PAGE**

TABLES

Table 1-1 CANDU Reactors Built or Under Construction 1-4
Table 1-2 Comparison of CANDU 6 and ACR-700 Unit Data 1-6
Table 1-3 List of Acronyms Used in ACR-700 Technical Description 1-24
Table 2.1-1 CNSC Regulations and Regulatory Documents 2-11
Table 2.1-2 CNSC Consultative Documents 2-13
Table 2.1-3 IAEA Codes and Standards – Preliminary List 2-14
Table 2.1-4 Effective Dose Limits for Normal Operation 2-16
Table 2.1-5 Equivalent Dose Limits for Normal Operation 2-16
Table 2.1-6 Dose and Release Limits for Postulated Accidents 2-17
Table 2.1-7 CAN/CSA Codes and Standards (National Standards of Canada) 2-18
Table 2.1-8 List of Safety Design Guides 2-20
Table 2.1-9 Safety Analysis Report - Table of Contents Outline 2-21
Table 4.1.2-1 Materials for Fuel Channel Pressure-Retaining Components 4-11
Table 4.1-1 Reactor Assembly Major Characteristics 4-21
Table 4.3-1 ACR Fuel Lattice Data 4-48
Table 4.3-2 Design Data of Fuel Channel 4-49
Table 4.3-3 Fuel Design Data 4-49
Table 4.3-4 Design Data of ACR-700 Core 4-50
Table 4.3-5 Major Reactivity Effects in ACR-700 Core 4-50
Table 4.3-6 Typical Results of Time-Average Simulation (Average Zone Controller Level = 50% Inserted) 4-51
Table 6.4.1-1 ECI System Performance Specifications 6-19
Table 6.5-1 Containment System Performance Specifications 6-41
Table 7.2.1-1 Shutdown System Number One Trip Parameters 7-10
Table 7.2.2-1 Shutdown System Number Two Trip Parameters 7-19
Table 11.3-1 Average Annual Quantities of Solid Radioactive Waste Produced for One ACR-700 Unit 11-12
Table 12.2-1 CANDU 6 Internal and External Collective Dose Trends and Capacity Factors 12-3

TABLE OF CONTENTS

SECTION **PAGE**

Table 13.2-1 Unit Data Listing 13-5

FIGURES

Figure 1-1 Pictorial View of Two-Unit ACR-700 Plant 1-5
Figure 1-2 ACR-700 Two-Unit Plant Layout of Major Structures 1-10
Figure 1-3 ACR-700 Nuclear Systems (Schematic) 1-12
Figure 2.3-1 Typical Two-Unit Plant Layout 2-24
Figure 2.3-2 ACR-700 Major Building Elevations 2-26
Figure 2.4-1 ACR-700 Construction Templates for the RB and RAB Using Very Heavy Lift (VHL) Cranes 2-28
Figure 2.4-2 ACR-700 Construction Access for the Principal Structures 2-30
Figure 2.4-3 ACR-700 Construction Sequence for 1st Unit (60 Month Schedule) 2-34
Figure 2.8-1 ACR-700 Building Zones 2-48
Figure 3.1-1 ACR-700 Reactor Building - Plan @ Elevation 100 3-6
Figure 3.1-2 ACR-700 Reactor Building - Plan @ Elevation 106 3-7
Figure 3.1-3 ACR-700 Reactor Building - Plan @ Elevation 110 3-8
Figure 3.1-4 ACR-700 Reactor Building - Plan @ Elevation 117 3-9
Figure 3.1-5 ACR-700 Reactor Building - Plan @ Elevation 126 3-10
Figure 3.1-6 ACR-700 Reactor Building - Plan @ Elevation 133 3-11
Figure 3.1-7 ACR-700 Reactor Building - Plan @ Elevation 137.6 3-12
Figure 3.1-8 ACR-700 Reactor Building - A-C Axis Cross Section 3-13
Figure 3.1-9 ACR-700 Reactor Building – B Side Section 3-14
Figure 3.1-10 ACR-700 Reactor Building - D Side Section 3-15
Figure 3.1-11 ACR-700 Reactor Building - B-D Axis Cross Section 3-16
Figure 3.2-1 ACR-700 Reactor Auxiliary Building – Plan at Elevation 99.0 m 3-23
Figure 3.2-2 ACR-700 Reactor Auxiliary Building A-C Axis Cross Section 3-24
Figure 3.3-1 Conceptual Plan of the Turbine Building 3-28
Figure 3.3-2 ACR-700 Turbine Building Section 3-29
Figure 3.4-1 ACR-700 Main Control Building – Plan at Elevation 117 m 3-31
Figure 4.1-1 Reactor Assembly 4-22

TABLE OF CONTENTS

SECTION **PAGE**

Figure 4.1-2 Fuel Channel Assembly 4-23
Figure 4.1-3 ACR Reactivity Mechanism Layout 4-24
Figure 4.1-4 Shutdown System No. 1 - Shutoff Units 4-25
Figure 4.2-1 CANFLEX Fuel Bundle 4-29
Figure 4.3-1 Lattice-Cell Configurations for NU CANDU and ACR-700 4-51
Figure 4.3-2 Comparison of Reactor-Core Sizes 4-52
Figure 4.3-3 CANFLEX Fuel Bundle 4-53
Figure 4.3-4 ACR-700 Irradiations Regions 4-54
Figure 4.3-5 ACR-700 Channel Average Exit Burnup (MWd/kgU) 4-55
Figure 4.3-6 ACR-700 Time-Average Channel Power (kW) Map for 2-Bundle-Shift Fuelling Scheme 4-56
Figure 4.3-7 End-View of ACR-700 4-57
Figure 4.3-8 Bundle-Power Profile for 7.3 MW High-Power Channel 4-58
Figure 4.3-9 Reactivity Change Due to Instantaneous Change in Fuel Temperature 4-59
Figure 4.3-10 Voiding Effect on the Flux/Power Profile upon LOCA (Normalized to Constant Reactor Power) 4-60
Figure 4.3-11 Coolant Void Reactivity upon Changing the Moderator Purity 4-61
Figure 4.3-12 Relationship between Reactor Period and Reactivity for Various Neutron Lifetimes 4-62
Figure 5.1-1 Heat Transport System Flow Diagram 5-17
Figure 5.1-2 Heat Transport System Layout 5-18
Figure 5.1-3 ACR-700 Steam Generator 5-19
Figure 5.1-4 ACR-700 Heat Transport Pump 5-20
Figure 5.2-1 Pressure and Inventory Control System Flow Diagram 5-35
Figure 5.2-2 Heat Transport Purification System Flow Diagram 5-36
Figure 5.2-3 Heat Transport Gland Seal Cooling System Flow Diagram 5-37
Figure 5.2-4 H_2O Leakage Collection System 5-38
Figure 5.2-5 Main Steam System Flow Diagram 5-39
Figure 5.2-6 Feedwater System Flow Diagram 5-40
Figure 5.3-1 ACR-700 Main Moderator System 5-46
Figure 5.4-1 ACR-700 Moderator Purification System 5-56

TABLE OF CONTENTS

SECTION		PAGE
Figure 5.4-2	Moderator Cover Gas System	5-57
Figure 5.4-3	Moderator Liquid Poison System	5-58
Figure 5.4-4	Moderator D_2O Collection System	5-59
Figure 6.3-1	Schematic Diagram of the Liquid Injection Shutdown System for ACR	6-14
Figure 6.4.1-1	Emergency Coolant Injection System	6-20
Figure 6.4.2-1	Schematic Diagram of the LTC System	6-26
Figure 6.5-1	Containment Cooling System	6-42
Figure 6.5-2	Systems Open to the Containment Atmosphere	6-43
Figure 7.2.1-1	Shutdown System No. 1 – Block Diagram	7-11
Figure 7.2.1-2	Shutdown System No. 1 – Trip Logic	7-12
Figure 7.2.2-1	Shutdown System No. 2 – Block Diagram	7-20
Figure 7.5-1	Reactor Regulating System Block Diagram	7-58
Figure 7.5-2	Overall Plant Control Block Diagram	7-59
Figure 7.6-1	ACR Main Control Room Concept	7-61
Figure 7.6-2	Plant Control and Display Systems	7-64
Figure 7.6-3	Overview of NSP Distributed Control System	7-66
Figure 7.6-4	Typical DCS Partition	7-67
Figure 8-1	ACR-700 Electrical Distribution System (EDS)	8-22
Figure 8-2	ACR-700 Class III Distribution System	8-23
Figure 8-3	ACR-700 Class IV Distribution System	8-24
Figure 8-4	ACR-700 Un-interruptible Power Supplies	8-25
Figure 9.2.2-1	NSP Service Water Systems Flow Diagram	9-7
Figure 9.2.2-2	BOP Service Water Systems Flow Diagram	9-8
Figure 9.2.7-1	Reserve Water Tank	9-14
Figure 9.3-1	ACR-700 Fuel Handling Systems Arrangement	9-16
Figure 9.3-2	New Fuel Transfer Mechanism	9-22
Figure 9.3-3	Spent Fuel Transfer Mechanism	9-23
Figure 9.3-4	Fuelling Machine Vault – Fuelling Machine, Bridge, and Column Arrangement	9-28

TABLE OF CONTENTS

SECTION **PAGE**

Figure 9.4-1 Simplified Flow Sheet of Proposed Two Unit ACR-700 Fire Protection System 9-43
Figure 9.5-1 Simplified ACR-700 Instrument Air System Flow Diagram 9-61
Figure 9.5-2 Simplified Breathing Air and Service Air Systems Flow Diagram 9-62
Figure 9.5-3 Heat Transport Sampling System 9-63
Figure 9.5-4 Annulus Gas System 9-64
Figure 9.5-5 Nomogram to Correlate Concentration of Acid, Conductivity and pH Value 9-65
Figure 9.5-6 Nomogram to Correlate Lithium Concentration, Conductivity and pH 9-66
Figure 9.5-7 Solubility of Magnetite versus Temperature for Different pH (25°C) Values 9-67
Figure 9.8-1 ACR-700 Spent Fuel Bay Cooling and Purification System 9-91
Figure 10.1-1 Turbine-Generator and Auxiliaries Flow Diagram 10-2
Figure 12.4-1 Reactor Building Section 12-17
Figure 12.4-2 Reactor Building Plan 12-18

TABLE OF CONTENTS

SECTION **PAGE**

1. INTRODUCTION AND SUMMARY DESCRIPTION 1-1

1.1 Introduction 1-1
1.2 Background 1-2
1.3 General Plant Description 1-5
1.3.1 Unit Power Output 1-5
1.3.2 Technical Data 1-6
1.3.3 Building and Structures 1-8
1.3.4 Reactor and Process Systems 1-11
1.3.4.1 Reactor 1-11
1.3.4.2 Reactivity Control Units 1-13
1.3.4.3 Heat Transport System 1-13
1.3.4.4 Moderator System 1-14
1.3.4.5 Steam and Feedwater System 1-14
1.3.4.6 Auxiliary Systems 1-15
1.3.4.7 Fuel Handling 1-15
1.3.4.8 Fuel 1-16
1.3.5 Electrical Power Systems 1-16
1.3.6 Instrumentation and Control 1-16
1.3.7 Balance of Plant 1-17
1.3.8 Safety Systems 1-17
1.3.9 Safety Support Systems 1-19
1.3.10 Radioactive Waste Management Systems 1-20
1.4 Reference Site Characteristics 1-22
1.4.1 Site Design Data 1-22
1.4.2 Cooling Water 1-22
1.4.3 Design Basis Earthquake 1-22
1.4.4 Site Design Earthquake 1-23
1.4.5 Tornado Protection 1-23
1.4.6 Exclusion Zone 1-23

1. INTRODUCTION AND SUMMARY DESCRIPTION

1.1 Introduction

Atomic Energy of Canada Limited (AECL) has developed the ACR-700™* (Advanced CANDU Reactor-700™) to meet customer needs for reduced capital cost, shorter construction schedule, high capacity factor, low operating cost, increased operating life, simple component replacement, and enhanced safety features.

The ACR design is based on the use of modular horizontal fuel channels surrounded by a heavy water moderator, the same feature as in all CANDU®** reactors. The major innovation in ACR is the use of slightly enriched uranium fuel, and light water as the coolant, which circulates in the fuel channels. This results in a more compact reactor design and a reduction of heavy water inventory, both contributing to a significant decrease in cost compared to CANDU reactors that employ natural uranium as fuel and heavy water as coolant.

The design also features higher pressures and temperatures of reactor coolant and main steam, thus providing an improved thermal efficiency than the existing CANDU plants. These thermal-hydraulic characteristics further emphasize the ACR drive towards improved economics.

The above changes and other evolutionary design improvements are well supported by the existing knowledge base and build on the traditional characteristics of the CANDU system, including: proven, simple and economical fuel bundle design; on-power fuelling; separate cool, low-pressure moderator with back-up heat sink capability; and low neutron absorption for good fuel utilization.

The safety enhancements made in ACR encompass safety margins, performance and reliability of safety related systems. In particular, the use of the CANFLEX®*** fuel bundle, with lower linear rating and higher critical heat flux, permits increased operating and safety margins of the reactor. Passive safety features draw from those of the existing CANDU plants (e.g., the two independent shutdown systems), and other passive features are added to strengthen the safety of the plant (e.g., a gravity supply of emergency feedwater to the steam generators). These and other safety improvements serve to promote the licensability of the design.

Additional important aspects of the ACR include: the adoption of state-of-the-art engineering methods, tools, and construction techniques; the consideration of the feedback from the existing

---

* ACR-700™ (Advanced CANDU Reactor™) is a trademark of Atomic Energy Canada Limited (AECL).

** CANDU® (CANada Deuterium Uranium) is a registered trademark of Atomic Energy of Canada Limited (AECL).

*** CANFLEX® is a registered trademark of AECL and the Korea Atomic Energy Research Institute (KAERI)

CANDU plants to improve operability and maintainability; and a full integration and optimization of nuclear steam plant and balance of plant.

The ACR-700 design described in this document is a two-unit integrated plant with each unit having a nominal gross output of 753 MWe with a net output of approximately 703 MWe. The reference ACR-700 two unit described in this document can be adapted to suit a single unit plant application, however the changes necessary are not covered in this document.

This Technical Description document provides a design description of major structures, process and safety systems and the major components associated with the ACR-700 reference design equipment, processes and systems. This document is divided into the sections outlined below and each section describes a particular aspect of the plant and provides the important design parameters of the reference ACR-700 plant in Section 13 Unit Data.

Section 1:	Introduction and Summary Description
Section 2:	Design Approach
Section 3:	Buildings and Structures
Section 4:	Reactor
Section 5:	Reactor Process Systems
Section 6:	Safety Systems
Section 7:	Instrumentation and Control
Section 8:	Electrical Power Systems
Section 9:	Auxiliary and Service Systems
Section 10:	Turbine Generator and Auxiliaries
Section 11:	Radioactive Waste Management
Section 12:	Radiation Protection
Section 13:	Unit Data

A listing of the acronyms used in the ACR-700 Technical Description is provided in Table 1-3.

1.2 Background

AECL has established a successful, internationally recognized line of CANDU pressure tube reactors (PTR) that use a heavy water moderator; in particular, the medium-sized CANDU 6 reactor. AECL has consistently adopted an evolutionary approach to the enhancement of CANDU nuclear power plant designs over the last 30 years. This approach, which has been applied to the current CANDU 6 reactor designs recently completed at the Qinshan CANDU Phase III site in the People's Republic of China (Unit No. 1 went in service in 2002 December, and Unit No. 2 in 2003 August), has been extended further in the development of the Advanced CANDU Reactor (ACR).

The ACR design has evolved from AECL's in-depth knowledge of CANDU systems, components, and materials, as well as the experience and feedback of owners and operators of CANDU plants. The ACR design retains the proven strengths and features of CANDU reactors, while incorporating innovations and state-of-the-art technology. The ACR also features major improvements in economics, inherent safety characteristics, and performance, while retaining the proven benefits of the CANDU family of nuclear power plants.

The CANDU system is ideally suited to this evolutionary design approach since the modular fuel channel reactor design can be modified extensively, through a series of incremental changes, to adjust the power output and improve the safety, economics, and performance. A summary of the CANDU plants in-service and under construction is provided in Table 1-1.

Table 1-1 CANDU Reactors Built or Under Construction

Name	Location	Capacity MWe		In-Service date
		(Gross)	(Net)	
Pickering 1	Canada	542	515	1971
Pickering 2	Canada	542	515	1971
Pickering 3	Canada	542	515	1972
Pickering 4	Canada	542	515	1973
Bruce 1	Canada	904*	848*	1977
Bruce 2	Canada	904*	848*	1977
Bruce 3	Canada	904*	848*	1978
Bruce 4	Canada	904*	848*	1979
Point Lepreau	Canada	680	638	1983
Gentilly-2	Canada	675	638	1983
Wolsong 1	Korea	678	638	1983
Embalse	Argentina	648	600	1984
Pickering 5	Canada	540	516	1983
Pickering 6	Canada	540	516	1984
Pickering 7	Canada	540	516	1984
Pickering 8	Canada	540	516	1986
Bruce 5	Canada	915	860	1985
Bruce 6	Canada	915	860	1984
Bruce 7	Canada	915	860	1984
Bruce 8	Canada	915	860	1987
Darlington 1	Canada	936	881	1990
Darlington 2	Canada	936	881	1989
Darlington 3	Canada	936	881	1991
Darlington 4	Canada	936	881	1992
Cernavoda 1	Romania	706	655	1996
Wolsong 2, 3 & 4	Korea	715 x 3	668 x 3	1997/1999
Qinshan Ph. III 1 & 2	China	728 x 2	670 x 2	2002/2003
Cernavoda 2	Romania	706	655	2006**

* Electrical equivalent (electricity plus process steam)
** Forecast

Building on this knowledge base of 31 CANDU reactors, AECL is continuing to adapt the CANDU system to develop the ACR reactor design.

The development of the ACR design has three main thrusts:

- Enhanced economics: lower capital, operating and maintenance costs; improved performance and reliability.
- Enhanced safety: inherent and engineered.
- Enhanced sustainability: use and conservation of resources; protection of the environment, and reduction of wastes.

1.3 General Plant Description

This sections provides a summary description of the major structures and systems of the ACR-700.

A pictorial view of the reference two-unit ACR-700 plant arrangement is shown in Figure 1-1. The reference plant design is suitable for cooling with sea, fresh water (river, lake) heat sinks, or with cooling towers.

1.3.1 Unit Power Output

The nominal gross electrical output of the reference generator is 753 MWe and the estimated unit service power load is about 50 MWe, yielding a net unit electrical output of approximately 703 MWe.

The output is dependant on the type of turbine generator and the cooling water conditions of a particular site. The output will be optimised for a particular site by adjusting the turbine/condenser design to suit the site cooling water conditions.

Figure 1-1 Pictorial View of Two-Unit ACR-700 Plant

1.3.2 Technical Data

A comparison of the key technical data of the ACR-700 plant with the CANDU 6 Qinshan plant is presented in Table 1-2 below.

Table 1-2
Comparison of CANDU 6 and ACR-700 Unit Data

DATA	CANDU 6	ACR-700
Reactor		
Type	PTR	PTR
Thermal Output to Steam Generators [MWth]	2064	2034
Coolant	Pressurized Heavy Water	Pressurized Light water
Moderator	Heavy Water	Heavy water
Calandria diameter [m]	7.6	5.2
Fuel channel	Horizontal Zr 2.5wt% Nb alloy with modified 403 SS end fittings	Horizontal Zr 2.5wt% Nb alloy with modified 403 SS end fittings
Number of fuel channels	380	292
Lattice pitch [mm]	286	220
Reflector thickness [mm]	655	480
Fuel		
Fuel	Sintered pellets of Natural UO_2	Sintered pellets of slightly enriched UO_2 & Natural UO_2 in central element
Enrichment level	0.71 wt% ^{235}U	Average 2.1 wt% U-235 in 42 elements, central element NU with Dysprosium
Fuel burn-up [MWd/te U]	7,500	20,500
Fuel bundle assembly	37 element	43 element CANFLEX
Length of bundle [mm]	495.3	495.3
Outside diameter (maximum) [mm]	102.7	103
Bundle weight [kg]	24.1 (includes 19.2 kg U)	22.7 (includes 18 kg U)
Bundles per fuel channel	12	12
Heavy Water		
Moderator Systems [Mg D_2O]	265	126
Heat Transport Systems [Mg D_2O]	192	0
Reserve [Mg D_2O]	9	4
Total [Mg D_2O]	466	130

DATA	CANDU 6	ACR-700
Heat Transport System		
Reactor outlet header pressure [MPa (g)]	9.9	12.1
Reactor outlet header temperature [ºC]	310	326
Reactor inlet header pressure [MPa (g)]	11.2	13.3
Reactor inlet header temperature [ºC]	266	280
Reactor core coolant flow (total) [Mg/s]	7.7	7.13
Single channel flow (maximum) [kg/s]	28	26
Steam Generators		
Number	4	2
Type	Vertical U tube with integral preheater	Vertical U tube with integral preheater
Steam temperature (nominal) [ºC]	260	281
Steam quality	0.9975	0.999
Steam pressure [MPa (g)]	4.6	6.4
Heat Transport Pumps		
Number	4	4
Pump type	Vertical, centrifugal, single suction, double discharge	Vertical, centrifugal, single suction, double discharge
Motor type	AC, vertical, squirrel cage induction	AC, vertical, squirrel cage induction
Rated flow [L/s]	2228	2350
Rated head [m]	215	235
Motor rating [MWe]	6.7	6.4
Containment		
Type	Pre-stressed concrete with epoxy liner	Pre-stressed concrete with steel liner
Inside diameter [m]	41.5	39.5
Height (Top of base slab to Inside of Dome) [m]	51.9	59
Designed for: LOCA Pressure [kPa(g)]	124	250
MSLB Pressure [kPa(g)]	200	450
Turbine Generator		
Steam Turbine Type	Hitachi impulse type, tandem compound double exhaust flow, reheat condensing turbine with a last stage blade length of 132 cm (52 inches)	Impulse type, tandem compound double exhaust flow, reheat condensing turbine with a last stage blade length of 132 cm (52 inches)
Steam Turbine Composition	One double flow high-pressure cylinder, two external moisture separators/reheaters and two double flow low pressure cylinders	One single flow, high-pressure cylinder, two external moisture separators/reheaters and two double flow, low pressure cylinders
Net heat to turbine [MWth]	2062	2030
Gross/Net electrical output* (nominal) [MWe]	728/666	753/703*
Gross Turbine Generator Efficiency	35.30%	37.0%
Steam temperature at main stop valve [ºC]	258	279
Steam pressure at main stop valve [MPa (g)]	4.41	6.2
Final feedwater temperature [ºC]	187.0	215
Condenser Vacuum [kPa (a)]	4.9*	4.9*

CANDU 6 data quoted is based on the Qinshan Phase III CANDU 6 design (50 Hz).

* Gross electrical output is dependent on cooling water temperature, the turbine-generator and condenser design, and the grid frequency (60 Hz).

1.3.3 Building and Structures

The principal structures associated with the power block of the integrated two-unit ACR-700 plant are:

- Reactor Buildings,
- Reactor Auxiliary Buildings (includes Secondary Control Areas),
- Turbine Buildings,
- Main Control Building,
- Service Building, and
- Maintenance Building.

Auxiliary structures include:

- Condenser Cooling Water (CCW) Pumphouse,
- Raw Service Water (RSW) Pumphouse,
- Diesel Generator Buildings
- Water Treatment Facility, and
- Main Switchyard.

The layout and buildings are designed to minimize the footprint and achieve a short, practical construction schedule that meets the utility needs. This is achieved by simplifying the design, minimizing and localizing interfaces, paralleling fabrication of modules/ prefabricated assemblies and civil construction, reducing construction congestion, providing improved access to all areas, providing flexible equipment installation sequences, and by reducing material handling requirements.

A typical power block of the two-unit plant layout is shown in Figure 1-2. The arrangements of the main structures within the reactor building, reactor auxiliary building, and turbine building of each unit are essentially identical. The integrated two-unit ACR-700 plant design uses the same power block for each of the units. The individual units of the two-unit plant share control, maintenance, administration, services areas, and some common process systems. The ACR-700 two-unit integrated plant is self-sufficient, containing all the facilities required for day-to-day operations.

The main control building, service building, and maintenance building are located between the two units to optimise and integrate the common services and thus help to reduce capital and operating costs. The main control building houses the control room for the two units and all of the control equipment and the associated electrical/mechanical equipment. The facilities provided in the service and maintenance buildings include radioactive waste management

equipment central stores, maintenance facilities, operations offices, and change rooms for the two units. Multiple plants can be located on the same site, using the footprint of the two-unit arrangement as the basic power block to optimise the number of units on a particular site and maximize the additional electrical output. The location of the pumphouses and switchyard relative to the power block is dependent on site conditions. Cooling towers will be used in place of pumphouses where cooling water availability is limited.

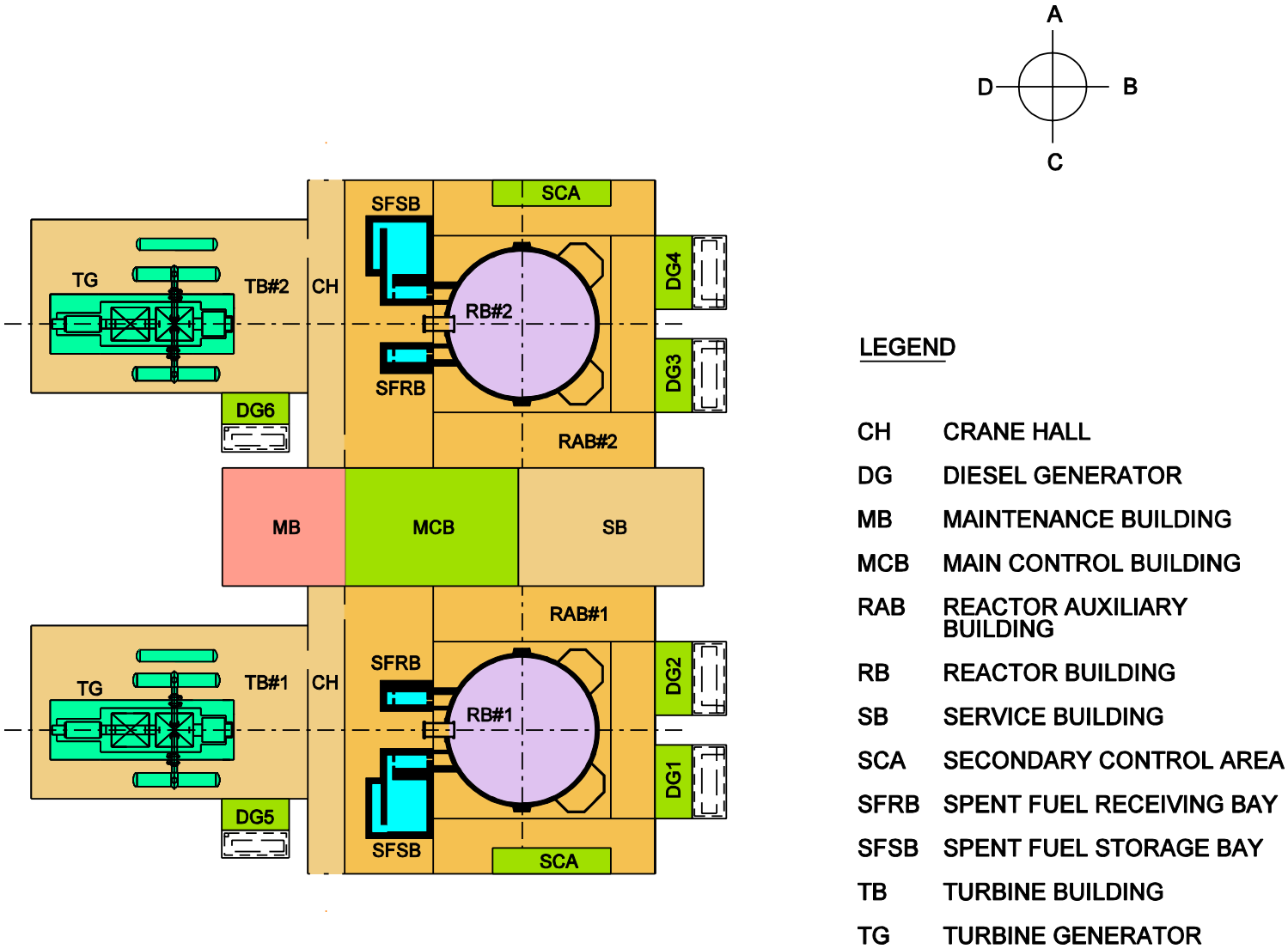

Figure 1-2 ACR-700 Two-Unit Plant Layout of Major Structures

1.3.4 Reactor and Process Systems

The major nuclear systems of the ACR-700 plant are located in the reactor building (RB) and reactor auxiliary building (RAB). These systems, schematically illustrated in Figure 1-3, include the following:

- The Reactor Assembly, consisting of calandria that has 292 channels in a reduced square lattice pitch, with larger diameter calandria tubes.
- Slightly enriched uranium (SEU) fuel contained in the ACR CANFLEX fuel bundle to provide a slightly negative coolant void reactivity with a burn-up of about three times that of natural uranium fuel.
- The Moderator System with a reduced volume of heavy water.
- Light water coolant with higher operating temperatures and pressures than current CANDU designs.
- The heat transport system (HTS) in a single-loop, figure-of-eight configuration with two steam generators, four heat transport pumps, two reactor outlet headers, and two reactor inlet headers.
- The Fuel Handling System, which consists of two fuelling machines, each mounted on a fuelling machine bridge and columns, and located at either end of the reactor.
- The Main Steam Supply System, with higher pressure and temperature conditions than the current CANDU designs, for improved turbine cycle efficiency.
- A simplified and more compact nuclear systems design that results in a reduced reactor building diameter.
- Safety systems, including two Shutdown Systems, Emergency Core Cooling System, and Containment and associated safety support systems.

1.3.4.1 Reactor

The reactor consists of a set of 292 horizontally aligned fuel channels arranged in a square pitch. The fuel channels contain the fuel and the high pressure light water coolant. They are mounted in a calandria vessel containing the heavy water moderator. Individual calandria tubes surround each individual fuel channel.

The calandria vessel is enclosed by endshields, which support each end of the calandria. They are filled with shielding balls and water to provide shielding. The fuel channels are located by adjustable restraints on the two endshields and are connected by individual feeder pipes to the Heat Transport System.

The calandria vessel is enclosed in a concrete vault (calandria vault) filled with light water for shielding. The calandria vault is closed at the top by the reactivity mechanisms deck.

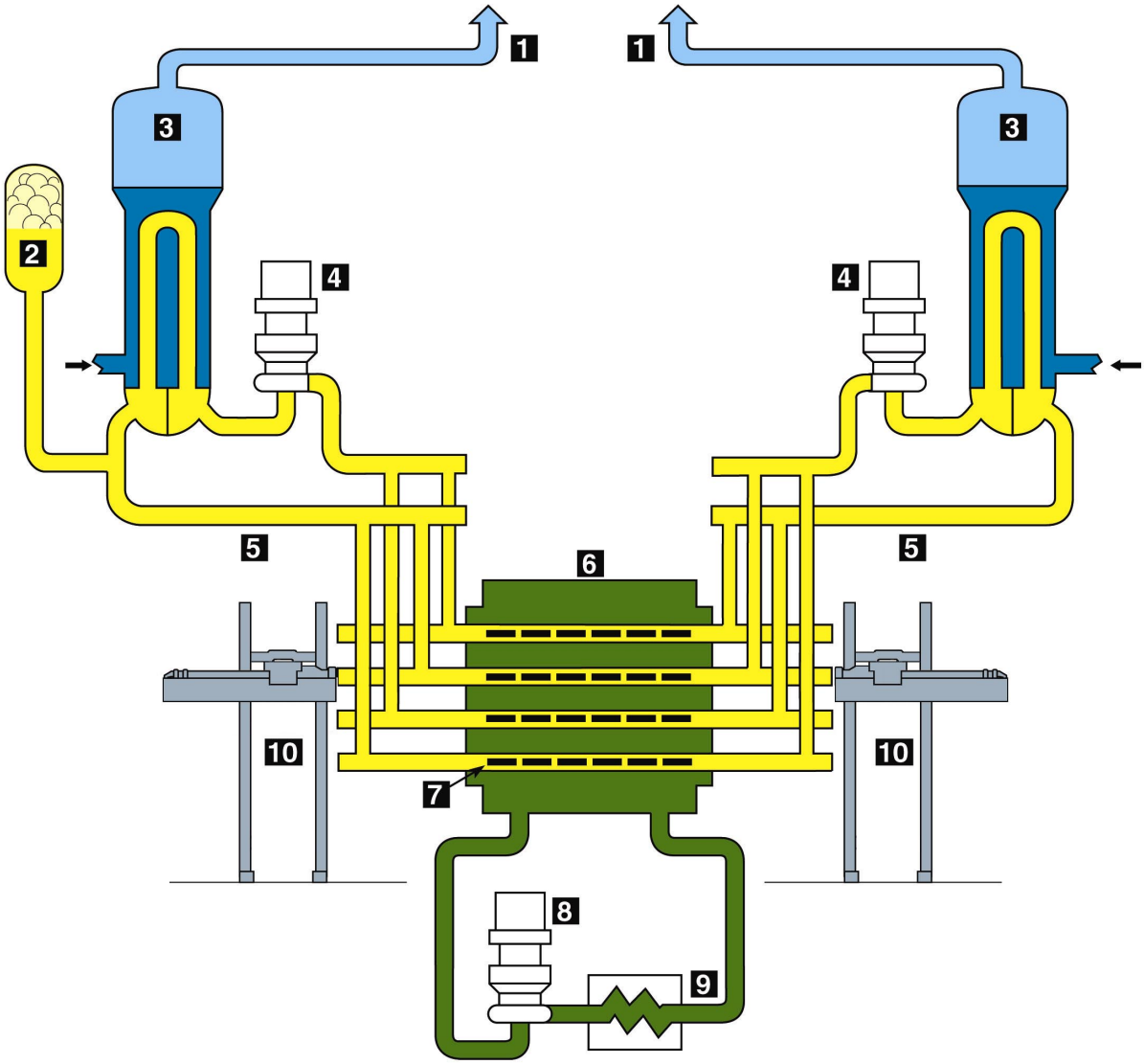

STEAM

FEEDWATER

LIGHT WATER COOLANT

HEAVY WATER MODERATOR

1	MAIN STEAM PIPES
2	PRESSURIZER
3	STEAM GENERATORS
4	HEAT TRANSPORT PUMPS
5	HEADERS
6	CALANDRIA
7	FUEL
8	MODERATOR PUMPS
9	MODERATOR HEAT EXCHANGERS
10	FUELLING MACHINES

Figure 1-3 ACR-700 Nuclear Systems (Schematic)

1.3.4.2 Reactivity Control Units

The reactivity control units are comprised of the in-reactor sensor and actuation portions of reactor regulating and shutdown systems. Reactivity control units include neutron flux measuring devices, reactivity control devices, and safety shutdown systems. Reactivity control units are simple, rugged, require little maintenance, and accordingly are highly reliable.

Flux detectors are provided in and around the core to measure neutron flux, and reactivity control devices are located in the core to control the nuclear reaction.

In-core flux detectors are used to measure the neutron flux in different zones of the core. These are supplemented by fission chamber and ion chamber assemblies mounted in housings on the calandria shell. The signals from the in-core flux detectors are used to adjust the absorber insertion in the zone control assemblies. By varying the absorber position in these assemblies the local neutron absorption in each zone of the reactor changes, thereby controlling the local neutron-flux level.

Control absorber elements penetrate the core vertically. These are normally parked out of the reactor core and are inserted to control the neutron flux level at times when a greater rate or amount of reactivity control is required than can be provided by the zone control assemblies.

Slow or long-term reactivity variations are controlled by the addition of a neutron-absorbing liquid to the moderator. Control is achieved by varying the concentration of this “neutron-absorbent material” in the moderator. For example, the liquid “neutron absorbent material” is used to compensate for the excess reactivity that exists with a full core of fresh fuel at first start-up of the reactor.

Two independent reactor safety shutdown systems are provided. Each shutdown system, acting alone, is designed to shut the reactor down and maintain it in a safe shutdown condition. The safety shutdown systems are independent of the reactor regulating system and are also independent of each other. The first shutdown system, SDS1, consists of shutoff units (absorber element, guide assembly, and drive mechanisms), which drop neutron absorbing elements into the core by gravity on receipt of a shutdown signal from the safety system. The second shutdown system, SDS2, uses injection of a strong neutron absorbing solution into the moderator. The automatic shutdown systems respond to both neutronic and process signals.

1.3.4.3 Heat Transport System

The heat transport system (HTS) circulates pressurized light water coolant through the reactor fuel channels to remove heat produced by nuclear fission in the core. The fission heat is carried by the reactor coolant to the steam generators, to produce steam on the secondary side that subsequently drives the turbine generator.

The heat transport system is complemented by auxiliary systems, which support its operation and maintain parameters within operation ranges to suit the various system functions.

The pressure and volume of the coolant in the HTS are controlled by the pressure and inventory control system. The long term cooling (LTC) system is used to remove decay heat following a reactor shutdown and to cool the HTS to a temperature suitable for maintenance of the heat transport and auxiliary system components.

The HTS and its auxiliary systems are similar to the equivalent systems in the CANDU 6 design. However, the overall design of these systems has been improved based on operation feedback from existing CANDU plants and has been simplified with the use of light water in a single-loop configuration.

The major components of the heat transport system are the reactor fuel channels, two steam generators, four electrically driven heat transport pumps, two reactor inlet headers, two reactor outlet headers, and the interconnecting piping. Light water coolant is fed to the fuel channels from the inlet headers at each end of the reactor and is returned to the outlet headers at the opposite end off the reactor.

The principal function of the heat transport system main circuit is to provide reliable cooling of the reactor fuel under all operating conditions, for the life of the plant and with minimal maintenance.

The heat transport system also provides a barrier to the release of radioactive fission products during normal operation to ensure that radiation doses to plant staff remain within acceptable limits. It is designed to retain its integrity under normal and abnormal operating conditions.

1.3.4.4 Moderator System

Neutrons produced by nuclear fission are moderated by the heavy water in the calandria. The heavy water moderator is circulated by the moderator pumps through the calandria at a relatively low temperature and low pressure and cooled by the moderator heat exchangers. The moderator heat exchangers remove the nuclear heat generated in the moderator and the heat transferred to the moderator from the fuel channels. Helium is used as a cover gas over the heavy water in the calandria. Chemistry control of the moderator water is maintained by the moderator purification system.

The moderator system also acts as a back-up heat sink under certain postulated accident conditions.

1.3.4.5 Steam and Feedwater System

The steam and feedwater system is composed of the main steam lines and the feedwater supply to the steam generators. The main steam lines supply steam from the two steam generators in the reactor building to the turbine through the steam balance header, in the turbine building, at a constant pressure. The system controls the feedwater flow to maintain the required steam generator level.

The system controls the steam generator pressure using the condenser steam discharge valves (CSDVs) and the atmospheric steam discharge valves (ASDVs). Main steam safety valves (MSSVs) are provided for overpressure protection of the steam generator secondary side. The feedwater system takes hot, pressurized feedwater from the feedwater train in the turbine building and discharges the feedwater into the preheater section of the steam generators.

Main steam isolation valves (MSIVs) are provided to isolate the main steam supply to the turbine in the event of steam generator tube leak, after reactor shutdown when the long term cooling system is placed in service and the heat transport system is depressurized.

1.3.4.6 Auxiliary Systems

There are a number of auxiliary nuclear systems associated with the heat transport, moderator, reactor and fuel handling systems. The most significant auxiliary systems described in this document are as follows:

a) heat transport pressure and inventory control system
b) heat transport purification system
c) heat transport gland seal system
d) heat transport H_2O collection system
e) long term cooling system
f) steam and feed water system
g) annulus gas system
h) moderator purification system
i) moderator liquid poison system
j) moderator heavy water collection system
k) deuteration and dedeuteration systems
l) moderator heavy water sampling system
m) heavy water supply system
n) resin transfer system
o) spent fuel bay cooling and purification system

1.3.4.7 Fuel Handling

The fuel handling system is used to fuel the reactor on demand for the purpose of controlling the reactor power distribution. The fuel handling system stores and handles fuel, from the arrival of new fuel to the storage of spent fuel. The fuel handling system is divided into new fuel handling and storage, fuel changing, and spent fuel handling and storage.

Fuel changing is performed on-power and remotely, using two fuelling machines. One fuelling machine is connected to each end of the fuel channel being fuelled. In the normal fuelling operation, two spent fuel bundles are removed from the outlet end of a fuel channel, while two fresh bundles are inserted at the inlet end.

Fuel is cooled by the fuel handling system once it is removed from the fuel channel, and it remains in the fuel handling system until it is replaced in the channel or discharged into the spent fuel bay.

Spent fuel is transferred in water through a tube to the spent fuel bay, which is located in the reactor auxiliary building. The spent fuel bay has a minimum storage capacity for at least ten years of accumulated reactor operation plus a full core discharge. Equipment is provided for the handling of spent fuel in the spent fuel bay. The spent fuel bay cooling and purification system removes the decay heat generated by the fuel, removes the suspended activation products, and controls the water chemistry.

1.3.4.8 Fuel

The fuel design has evolved from the fuel used in the Pickering and Bruce reactors, and that used in all of the CANDU 6 reactors to the improved CANFLEX fuel bundle already demonstrated in the CANDU 6 Pt. Lepreau reactor. It is in the form of SEU dioxide pellets, sheathed and sealed in zirconium alloy tubes. Forty-three tubes are assembled between end plates to form a fuel bundle. Each of the 292 channels contains 12 bundles.

1.3.5 Electrical Power Systems

The performance of the electrical power system in a nuclear plant directly affects the availability of the generating unit and the reliability of the process and control systems. The electrical power system consists of connections to the offsite grid, the main turbine generator and the associated main output system, the onsite standby diesel generators, battery power supplies and uninterruptible power supplies (UPS), and distribution equipment. The system is equipped with the necessary protection, controls, and monitoring to enable it to supply electrical energy output to the grid and all loads within the power plant. Equipment distributing power from the standby diesel generators, batteries, and the UPS to the NSP is seismically and environmentally qualified. Each unit of the ACR-700 plant has a dedicated electrical distribution system with inter-unit ties in the Class III distribution and common standby generators.

The preferred sources of power to the electrical power distribution system are the offsite network during reactor start-up and shutdown, and the main turbine generator during all other normal operating conditions.

1.3.6 Instrumentation and Control

The unit control and monitoring systems utilized in ACR-700 represent the next step in the evolution of the highly automated control systems developed for the CANDU 6 Qinshan plant. Building from this base, the ACR-700 design benefits from the application of modern distributed

control, display, and network communication technologies. This results in substantial improvements in monitoring capability and contributes to lower capital and operating costs.

The key benefits of the improved instrumentation and control systems are as follows:

- Reduction in the number of instrumentation and control components, leading to improved reliability and reduced construction and maintenance costs.
- Increased automation to free the operations staff from tedious or stressful tasks, thus reducing the frequency of operator error.
- Improved information and data communications systems that facilitate awareness of the unit operational state, provide better detection and diagnosis of faults, and reduce plant outages.

Application of instrumentation for each unit follows the channelization and redundancy requirements of the process systems, safety and safety support systems.

1.3.7 Balance of Plant

The balance of plant (BOP) consists of the turbine building, steam turbine, generator and condenser, the feedwater heating system with associated auxiliary, and electrical equipment. The BOP also includes the water treatment facilities, auxiliary steam facilities, pumphouses and/or cooling towers, main switchyard, and associated equipment to provide all conventional services to the ACR-700 two-unit plant (see Figure 1-2).

Two steam generators are provided in the heat transport system. They discharge steam into a common header located in the turbine building that supplies the required steam to the turbine generator and the auxiliary steam systems. The power generating equipment consists of the following:

- A turbine generator set with a nominal gross output of 753 MW(e). This consists of a tandem compound, reheat condensing type steam-driven single shaft turbine, composed of one high pressure and two low pressure cylinders, with a thermal cycle involving two stage moisture separator/reheater vessels located between the high pressure turbine exhaust and the low pressure turbine inlets. The generator is cooled with water and hydrogen and provided with a static excitation system.
- A condenser with tubes at right angles to the turbine axis.
- A regenerative feedwater heating system with low pressure stages, deaerating feedwater heater and high pressure stages.
- Other auxiliaries associated with the turbine generator set.

1.3.8 Safety Systems

The safety systems are those systems designed to quickly shut down the reactor, remove decay heat, and limit the radioactivity release subsequent to the failure of normally operating process systems. These are the shutdown system number 1 (SDS1), shutdown system number 2 (SDS2),

emergency core cooling (ECC) system, and containment system. Safety support systems are those that provide services needed for proper operation of the safety systems (e.g., electrical power, cooling water, instrument air).

- Shutdown System No. 1 (SDS1)

  SDS1 quickly terminates reactor power operation and brings the reactor into a safe shutdown condition by inserting shutoff rods into the reactor core.

  Reactor operation is terminated when a certain neutronic or process parameter enters an unacceptable range. The measurement of each parameter is triplicated and the system is initiated when any two out of the three trip channels are tripped by any parameter or combination of parameters.

- Shutdown System No. 2 (SDS2)

  SDS2 provides a second independent method of quickly terminating reactor power operation by injecting a strong neutron absorbing solution (gadolinium nitrate) into the moderator when any two out of three trip channels are tripped by any parameter.

- Emergency Core Cooling (ECC) System

  The ECC system is designed to supply water (emergency coolant) to the reactor core to cool the reactor fuel in the event of a loss-of-coolant accident (LOCA). The design bases events are LOCA events where ECC is required to fill and maintain the heat transport circuit inventory.

  The ECC function is accomplished by two sub-systems:

  - The emergency coolant injection (ECI) System, for high-pressure coolant injection after a LOCA.
  - The LTC system for long term recirculation/recovery after a LOCA. The LTC system is also used for long term cooling of the reactor after shutdown following other accidents and transients.

- Containment System

  The basic function of the containment system is to form a continuous, pressure-retaining envelope around the reactor core and the heat transport system. Following an accident, the containment system limits release of resultant radioactive material to the external environment.

  The containment system includes the steel-lined, pre-stressed concrete reactor building containment structure, main and auxiliary airlocks, building air coolers for pressure reduction, and a containment isolation system consisting of valves or dampers in the ventilation ducts and certain process lines penetrating the containment envelope. This containment design ensures a low leakage rate while at the same time providing a pressure retaining boundary for LOCAs.

  The containment system automatically closes all penetrations open to the reactor building atmosphere when an increase in containment pressure or radioactivity level is detected.

Measurements of containment pressure and radioactivity are triplicated and the system is actuated using two-out-of-three logic.

Heat removal from the containment atmosphere after an accident is provided by local air coolers suitably distributed in various compartments inside the reactor building.

Hydrogen control is provided in the reactor building by passive autocatalytic recombiners that limit hydrogen content to below the acceptable limits within any significant enclosed compartment of the containment following an accident.

1.3.9 Safety Support Systems

Safety support systems are those systems needed to ensure proper operation of the safety systems, as well as systems provided for the mitigation of postulated events. For ACR-700, major safety support systems include the following:

- Reserve Water System

  The ACR-700 design includes a reserve water system with a reserve water tank. The tank, which is located at a high elevation in the reactor building, provides an emergency source of water to the containment sumps for recovery by the long term cooling system in the event of a LOCA, to ensure net positive suction head for the LTC pumps. In addition, the tank provides emergency makeup water by gravity to the steam generators (emergency feedwater), moderator system, shield cooling system and heat transport system if required.

- Electrical Power Systems

  The electrical power systems supply all electrical power needed to perform safety functions under transient and accident conditions and non-safety functions for normal operation. The safety related portions of the systems are seismically qualified and consist of redundant divisions of standby generators, batteries, and distribution to the safety related loads.

- NSP Recirculated Cooling Water System

  The NSP recirculated cooling water (NSP-RCW) system circulates demineralised cooling water to different safety and non-safety related loads in the plant. The NSP-RCW system is seismically qualified and is comprised of two redundant closed loop divisions. Both divisions operate during normal operation. Refer to Section 9.2.2 for further details.

- NSP Raw Service Water System

  The raw service water system (NSP-RSW) disposes of the heat from the NSP-RCW system to the ultimate heat sink. The NSP-RSW system is seismically qualified and comprised of two redundant open loop divisions. The RSW system is separate from the condenser cooling water system. Refer to Section 9.2.2 for further details.

- Compressed Air System

  The compressed air system provides instrument air and breathing air to different safety and non-safety related systems in the plant.

- Chilled Water System

  The chilled water system supplies water to air conditioning and miscellaneous equipment, and provides sufficient cooling capacity during normal operation. The chilled water system includes two separate systems, i.e. shared (between 2 reactor units) non-seismically qualified system serving non-safety/non-seismically qualified loads and a unitized seismically qualified system serving safety/seismically qualified loads. On loss of Class IV power, the shared non-safety chilled water system shuts down whiles the unitized safety chilled water system operates on Class III power provided by standby diesel generators.

1.3.10 Radioactive Waste Management Systems

Facilities are provided for interim storage, or controlled release of all radioactive gaseous, liquid, and solid wastes.

The radioactive waste equipment, tanks, and facilities for handling liquids and solids are designed to be flexible enough to cope with the anticipated increase in waste volume and activity during periods of major maintenance or adverse reactor operation.

The generation, movement and control of active wastes are to some extent specific to the plant type and the way it is operated. For the ACR-700 design, the origins of the waste activity can be classified into the following groups:

a) fuel fission products

b) system material activation products

c) system fluid activation products

Although the majority of the radionuclides in all these categories remain at their place of origin, some ultimately reach one or more parts of the active waste management system. The majority of the fission products that escape from fuel defects while in the core or in the fuel handling equipment are filtered, trapped, or removed in the heat transport system and its auxiliary systems. This leads to disposal of the majority of the fission products in either spent resin or filter elements as solid wastes. Radionuclides that escape by leakage, or otherwise, from the heat transport system boundary reach the building atmosphere. Most of these are collected and are released under control by the active ventilation system. If deposited and washed down, they will reach the liquid radioactive waste facilities system through the active drainage system.

In the ACR-700 design, since the reactor coolant is light water, the tritium produced by activation of the heavy water is limited to the heavy water moderator systems, located within the reactor building. The heavy water is collected and cleaned, thus minimizing the loss of heavy water from the plant. Most of the tritium is retained in the moderator D_2O liquid and vapour collection systems.

Components being serviced will be subjected to decontamination procedures either “in-situ” or in special decontamination facilities for the removal of fission products or activation products. The residue from these procedures is sent into the appropriate radioactive waste systems.

On an integrated basis, the radioactive waste arising over the 60 year operation of the ACR, will be managed by specification of appropriate on or off-site emissions (for the individual waste streams).

1.4 Reference Site Characteristics

1.4.1 Site Design Data

AECL has developed a set of site design parameters that permit the ACR-700 plant to be located on a number of potential sites, without significant design or documentation changes. For example, the building layout has sufficient space to accommodate the larger equipment required by a site with higher cooling water temperatures and a 50 Hz frequency of power grid.

All safety related buildings and structures are designed to accommodate the seismic requirements of all seismicity sites in North America, and other potential sites overseas. The design accommodates a wide range of geotechnical and meteorological data/conditions.

1.4.2 Cooling Water

The RCW system services all nuclear steam plant and balance of plant cooling requirements and can accommodate saltwater or fresh water sites. The recirculated cooling water heat exchangers are cooled by the RSW system. A once through, condenser-cooling water is utilized to cool and condense the low pressure turbine exhaust steam in the condenser. The plant can also be designed to operate using conventional cooling towers.

The design can accommodate a range of cooling water temperatures, from those for a typical cold or warm site, as well as sites with no cooling water.

1.4.3 Design Basis Earthquake

The safety related structures and systems of ACR-700 are suitable for sites with the potential seismic activity indicated below.

Design basis earthquake (DBE) – Peak Horizontal Acceleration 0.3 g

DBE is the maximum ground motion of a potentially severe earthquake that has a low probability of being exceeded during the lifetime of the plant.

The following structures are qualified to withstand the DBE:

- Reactor Buildings,
- Reactor Auxiliary Buildings (includes Secondary Control Area),
- Main Control Building,
- Maintenance Building,
- RSW Pumphouse,
- Diesel Generator Buildings.

Other structures and systems that are not considered safety related are designed to an earthquake level, consistent with local building codes.

1.4.4 Site Design Earthquake

A site design earthquake (SDE) is defined as a set of possible earthquakes having an occurrence rate of not greater than 0.01 per year, based on historical records of actual earthquake applicable to the site. For the design of some of the ACR-700 buildings and systems a second level earthquake (i.e. SDE) is used. A SDE peak horizontal round acceleration of 0.15g has been chosen for the ACR-700 plant. For potential sites in eastern North America, this peak horizontal ground acceleration will have an occurrence rate of less than 0.01 per year.

1.4.5 Tornado Protection

Tornado protection is provided for safety related structures. The design basis tornado (DBT) is defined by a maximum wind speed appropriate to the site. The DBT is based on USNRC Regulatory guide 1.76 and is modified such that the probability of windspeeds greater than that of the DBT ranges between 10^{-6} and 10^{-7} per year.

1.4.6 Exclusion Zone

In order to keep radiation exposure to the public within allowable limits, the plant is designed to be suitable for an exclusion zone of 500 m radius. All unauthorized persons are restricted from this zone, and likewise, habitation within it is not permitted. It is also at the discretion of the utility to implement a larger exclusion zone if desired.

Table 1-3
List of Acronyms Used in ACR-700 Technical Description

Acronym	Full Text/Definition
3D CAD	Three Dimensional Computer Aided Design
AC	Alternating Current
ACCIS	Advanced Control Centre Information System
ACR	Advanced CANDU Reactor
ACR-700	Advanced CANDU Reactor - 700 MWe output
A/D	Analog to Digital (converter)
AECB	Atomic Energy Control Board [renamed Canadian Nuclear Safety Commission (CNSC) in 2000]
AECL	Atomic Energy of Canada Limited
AGS	Annulus Gas System
AI	Analog Input
ALARA	As Low As Reasonably Achievable
ANN	Annunciation
AO	Analog Output
AOV	Air Operated Valves
ASDV	Atmospheric Steam Discharge Valve
ASI	AECL Subject Index
ASTM	American Society for Testing and Materials
BEP	Basic Engineering Program
BOP	Balance Of Plant
CA	Control Absorber
CAR	Control Absorber Rod
CAE	Computer Aided Engineering
CAMLS	Computerized Annunciation Message List System
CANDU	CANada Deuterium Uranium
CBM	Condition Based Maintenance
CCP	Critical Channel Power
CCW	Condenser Cooling Water
CED	Contract Effective Date
CCER	Central Control Equipment Room
CFV	Channel Flow Verification
ChemAND	Chemistry ANalysis and Diagnostic system
CHF	Critical Heat Flux
CIS	Containment Isolation System
C/M	Computer/Manual

Acronym	Full Text/Definition
CNSC	Canadian Nuclear Safety Commission (formerly AECB)
COG	CANDU Owners Group
COT	Calandria Outlet Temperature
CP	Channel Power
CPPF	Channel Power Peaking Factor
CPR	Critical Power Ratio
CPU	Central Processing Unit
CSA	Canadian Standards Association
CSDV	Condenser Steam Discharge Valve
CSP	Critical Safety Parameter
CTM	Channel Temperature Monitoring (system)
D_2O	Heavy Water
D/A	Digital to Analog
DBE	Design Basis Earthquake
DBT	Design Basis Tornado
DC	Direct Current
DCC	Digital Control Computer
DCS	Distributed Control System
DG	Design Guide (document)
DG	Diesel Generator
DI	Digital Input
DM	Design Manual
DO	Digital Output
DP, dp	Differential Pressure (ΔP in DG)
DUPIC	Direct Use of spent PWR fuel In CANDU
EAB	Exclusion Area Boundary
ECC, ECCS	Emergency Core Coolant System (ECI + LTC)
ECI	Emergency Coolant Injection (high pressure injection)
EDS	Electrical power Distribution System
EHC	Electro Hydraulic Controller
EMI	Electro-Mechanical Indicator
EPS	Emergency Power System
EQ	Environmental Qualification
ERC	Emergency Response Centre
EWS	Emergency Water Supply
FAC	Flow Assisted Corrosion
FAF	Flow Assist Fuelling
FARE	Flow Assist Ram Extension

Acronym	Full Text/Definition
FC	Fails Closed
FHDCS	Fuel Handling Distributed Control System
FM	Fuelling Machine
FMDP	Fuel Management Design Program
FO	Fails Open
FP	Full Power
FRS	Floor Response Spectra
FW	Feedwater
GEM	Gaseous Effluent Monitor
GFP	Gaseous Fission Product (system)
GIC	Gateway Interface Computer
GLM(s)	Gross Leak Monitoring (system)
GSS	Guaranteed Shutdown State
HCV	Hand Control Valve
HDR	Header
HDS	Historical Data Storage
HESIR	Hybrid-Encapsulated, Straight-Individually-Replaceable
HFD, HFDA	Horizontal Flux Detector (Assembly)
HFE	Human Factors Engineering
HFEPP	Human Factors Engineering Program Plan
HMI	Human-Machine Interface
HP	High Pressure
HS	Handswitch - mode selection device, may be hardwired handswitch or touch screen type software device
HSI	Human-System Interface
HSP	Handswitch Position
HTS	Heat Transport System
HV	High Voltage
HVAC	Heating, Ventilating and Air Conditioning
HX	Heat Exchanger
IAEA	International Atomic Energy Agency
IEEE	Institute of Electrical & Electronic Engineers
IC	Ion Chamber
I&C	Instrumentation and Controls
ICRP	International Commission for Radiation Protection
IS	Illuminating Engineering Society
IO	Input/Output
ISA	Instrument Society of America

Acronym	Full Text/Definition
LAC	Local Air Cooler
LAN	Local Area Network
LED	Light-Emitting Diodes
LEM	Liquid Effluent Monitor
Lin-N	Linear Ion Chamber Power Measurement
LISS	Liquid Injection Shutdown System (SDS2)
LOCA	Loss Of Coolant Accident
LOCIV	Loss of Class IV (electric power)
LOECC	Loss of Emergency Core Cooling
Log-N	Logarithmic Ion Chamber Power Measurement
LOR	Loss of Regulation
LORC	Loss of Reactivity Control
LP	Lattice Pitch, Low Pressure
LRV	Liquid Relief Valve
LTC	Long Term Cooling
LV	Low Voltage
LVDT	Linear Variable Displacement Transducers
LWR	Light Water Reactor
MCC	Motor Control Centre
MCR	Main Control Room
MHL	Moderator High Level
MLL	Moderator Low Level
MOT	Main Output Transformer
MOV	Motor Operated Valves
MOX	Mixed Uranium and Plutonium Oxide Fuel
MP	Medium Pressure
MSIV	Main Steam Isolating Valves
MSLB	Main Steam Line Break
MSSV	Main Steam Safety Valves
MTC	Moderator Temperature Control (program)
MV	Motorized Valve
NBCC	National Building Code of Canada
NC	Normally Closed
NEMA	National Electrical Manufacturers' Association
NO	Normally Open
NPP	Nuclear Power Plant
NPSH	Net Positive Suction Head
NRV	Non-Return Valve

Acronym	Full Text/Definition
NSP	Nuclear Steam Plant
NSPS	Nuclear Steam Plant Services
OID	Onset of Intermittent Dryout
OM&A	Operation, Maintenance and Administration
OSV	Onset of Significant Void
PA	Public Address (system)
PABX	Private Automatic Branch Exchange (telephone system)
PAM	Post Accident Monitoring
PAX	Private Automatic Exchange (telephone system)
PB	Push-button
PDC	Programmable Digital Comparator
P&IC	Pressure and Inventory Control (system)
PDLC	Parallel Data Link Controller
PDS	Plant Display System
PL	Panel
PLEX	Plant Life Extension
PLIA	Post-LOCA Instrument Air
PLiM	Plant Life Management
PM	Pump Motor
PROM	Programmable, Read-Only Memory
PRV	Pressure Regulating Valve
PSA	Probabilistic Safety Assessment
PSAR	Preliminary Safety Analysis Report
PTR	Pressure Tube Reactor
PV	Pneumatic Control Valve
PWR	Pressurized Water Reactor
PZR	Pressurizer
QA	Quality Assurance
RAB	Reactor Auxiliary Building
RAM	Random-Access Memory
RB	Reactor Building
RCU	Reactivity Control Unit
RCW	Recirculated Cooling Water
RFSP	Reactor Fuelling Simulation Program
RIH	Reactor Inlet Header
RO	Reverse Osmosis
ROH	Reactor Outlet Header
ROM	Read-Only Memory

Acronym	Full Text/Definition
ROP System	Regional Overpower Protection System
ROPT	Regional Overpower Protection Trip
RP	Reactor Power
RRS	Reactor Regulating System
RSW	Raw Service Water
RTD	Resistance-Temperature Detector
RV	Relief Valves
RWS	Reserve Water System
RWT	Reserve Water Tank
SAB	Safety Analysis Basis (document)
SCA	Secondary Control Area
SDC	Shutdown Cooling
SDE	Site Design Earthquake
SDG	Safety Design Guide
SDM	Safety Design Matrix
SDS	Shut Down System (SDS1, SDS2)
SDS1	Shut Down System 1
SDS2	Shut Down System 2
SEU	Slightly Enriched Uranium
SFB	Spent Fuel Bay
SFD	Spent Fuel Discharge
SG	Steam Generator
SGLC	Steam Generator Level Control
SGPC	Steam Generator Pressure Control (program)
SGMW	Steam Generator Make-up Water (system)
SIR	Straight Individually-Replaceable (detector)
SOR	Shutoff Rod – The absorber element of a shutoff unit
SQ	Seismic Qualification
SSM	Safety System Monitoring
SST	System Service Transformer
SWGR	Switchgear
TC	Test Computer
TG	Turbine Generator
TGC	Turbine Generator Controller
TK	Tank
TRC	Trip Computer
TSC	Technical Support Centre
TEMA	Tubular Exchanger Manufacturers' Association

Acronym	Full Text/Definition
TYP	Typical
U/F	Ultra-Filtration
UPR	Unit Power Regulator
UPS	Uninterrupted Power Supply
UST	Unit Service Transformer
VDU	Video Display Unit (CRT or other)
VESDA	Very Early Smoke Detection Apparatus
VFD	Vertical Flux Detector
VHL	Very Heavy Lift
WCA	Work Control Area
ZCRJ	Zero Clearance Roll Joints
ZCU	Zone Control Unit
ZPH	Zero Power Hot

TABLE OF CONTENTS

SECTION **PAGE**

2. DESIGN APPROACH 2-1

2.1 Safety and Licensing 2-1
2.1.1 Licensing Basis 2-1
2.1.2 ACR Safety Characteristics 2-1
2.1.3 Separation of Safety Features and Protection against Common Cause Events 2-2
2.1.4 Licensing Process 2-3
2.1.5 Regulatory Documents 2-3
2.1.6 Requirements of the International Atomic Energy Agency (IAEA) 2-4
2.1.7 Safeguards 2-4
2.1.8 Security 2-5
2.1.9 Safety Design Requirements 2-5
2.1.9.1 Regulatory Dose Limits 2-5
2.1.9.2 Codes and Standards 2-5
2.1.9.3 Defence In Depth 2-6
2.1.9.4 Single Failure Criterion 2-6
2.1.9.5 Fail Safe Design 2-6
2.1.9.6 Redundancy 2-6
2.1.9.7 Diversity 2-6
2.1.9.8 Reliability 2-6
2.1.9.9 Testability 2-7
2.1.9.10 Safety Design Guides 2-7
2.1.10 Safety Analysis Requirements 2-8
2.1.10.1 General Requirements 2-8
2.1.10.2 Scope of Safety Assessment 2-8
2.1.10.3 Elements of the Safety Analysis Program 2-8
2.1.10.4 Safety Analysis Process 2-9
2.1.10.5 Safety Analysis Computer Codes 2-9
2.1.10.6 Best Estimate And Uncertainty Analysis 2-9
2.1.10.7 Acceptance Criteria 2-9
2.1.10.8 Probabilistic Safety Assessment 2-10
2.1.10.9 Severe Accident Assessment 2-10
2.1.10.10 Application of Lessons Learned from Previous Severe Accidents 2-10
2.1.10.11 Safety Analysis Reports 2-10
2.2 Quality Assurance 2-22
2.3 Plant Layout 2-23
2.3.1 General 2-23
2.3.2 Layout Approach 2-25
2.3.3 Orientation and Elevations 2-25
2.4 Construction Methods 2-27
2.4.1 Open Top Construction 2-31

TABLE OF CONTENTS

SECTION **PAGE**

2.4.2 Parallel Construction 2-31
2.4.3 Prefabrication / Modularization 2-31
2.4.4 Up-to-Date Construction Technologies 2-32
2.4.5 Building Construction 2-32
2.4.5.1 Reactor Building (RB) 2-32
2.4.5.2 Reactor Auxiliary Building 2-35
2.4.5.3 Turbine Building 2-35
2.4.6 Module Implementation Strategy 2-35
2.4.6.1 Design Process 2-35
2.4.6.2 Module Fabrication Shops 2-36
2.4.6.3 Transportation 2-36
2.4.6.4 Installation 2-36
2.5 Human Factors Engineering 2-37
2.6 Radioactive Waste Management 2-38
2.6.1 General 2-38
2.6.2 Solid Radioactive Waste Management System 2-38
2.6.3 Liquid Radioactive Waste Management System 2-39
2.6.4 Gaseous Radioactive Waste Management System 2-40
2.7 Operation & Maintenance 2-41
2.7.1 Summary 2-41
2.7.2 Design Improvements for Operational Performance 2-41
2.7.2.1 Planned Outage Design Features 2-41
2.7.2.2 Forced Outage Improvement 2-42
2.7.3 O&M Cost Improvements 2-43
2.8 Radiation Protection & Zoning 2-45
2.8.1 Radiation Protection 2-45
2.8.2 Zoning 2-46
2.8.3 Building Zones 2-47
2.9 References 2-49

2. DESIGN APPROACH

2.1 Safety and Licensing

2.1.1 Licensing Basis

To ensure that the ACR-700 design is licensable in Canada and to facilitate its licensability in other countries, the following licensing requirements are being applied:

- The design complies with relevant Canadian nuclear safety requirements.
- The design is compatible with internationally accepted practices.
- The design is easily understood internationally.
- The design results in one set of internationally acceptable safety analyses, which will eliminate or minimize duplication of effort for different customers in all jurisdictions.
- The design meets the environmental requirements for siting in Canada and other countries.

The ACR is expected to be licensable in jurisdictions outside Canada by virtue of the comprehensiveness of Canadian licensing and safety requirements and the history of successfully licensing CANDU 6 reactors in other countries.

2.1.2 ACR Safety Characteristics

The design has the following inherent and engineered safety characteristics:

- On-power refuelling assures that very little reactivity needs to be held up in movable control devices or in neutron absorbent material dissolved in the moderator (no chemicals are added to the reactor coolant for reactivity control). Thus any malfunctions in the reactor control system produce only modest reactivity changes.
- The control and shutdown devices are in the low pressure moderator and are not subject to large hydraulic forces.
- The equilibrium core has a significantly negative power reactivity coefficient, which provides inherent protection against transients with inadvertent increase of reactor power.
- The void reactivity coefficient is small and negative, and offers a good balance of inherent nuclear protection between loss-of-coolant accidents (LOCA) and accidents with fast cooldown of the heat transport system.
- Natural coolant circulation can remove decay heat from the fuel if Class IV electrical power to the heat transport pump motors is lost.
- Two independent shutdown systems are provided. Each system can shut down the reactor for the entire spectrum of design basis events.

- Emergency core cooling (ECC) is provided by an emergency coolant injection (ECI) system, which injects water into the heat transport system after a LOCA. A long term cooling (LTC) system provides adequate decay heat removal from the reactor core in the recovery/recirculation phase after a LOCA.
- For a loss of the main feedwater pumps and/or Class IV electrical power, the auxiliary feedwater pumps with power supplied from the Class III power systems provide effective cooling with the reactor shut down. The auxiliary feedwater supply is also backed up by passive emergency feedwater with gravity water supply from the reserve water tank to the steam generators.
- A separate secondary control area is provided as a backup to the main control room for certain emergency conditions.
- Distributed control systems control the plant routinely, freeing the operator from mundane tasks thus reducing the likelihood of operator error. The safety system responses are automated to the extent that no operator action is needed for a minimum of eight hours following most design basis accidents.

Radiation doses to the public and to operators from ACR plants during normal operation are low. This is partly due to the ability to remove defective fuel when it is detected during normal operation. In addition to the above requirements, the ACR-700 design also achieves the following requirements:

- The ACR design follows the most recent recommendations by the International Commission on Radiological Protection on occupational and public exposure limits, as described in their publication ICRP-60.
- In keeping with current CANDU philosophy, the ACR design adheres to the principle that radiation exposures resulting from the plant be as low as reasonably achievable (ALARA).
- The plant will operate with a total staff exposure target that is less than an average of 1 person-Sv/year. This is achieved by improved equipment layout and reduced maintenance requirements in active areas of the plant.

2.1.3 Separation of Safety Features and Protection against Common Cause Events

There are four basic safety functions that must be performed by plant systems to assure public safety, following an accident. These are as follows:

- To shut down the reactor,
- To cool the fuel,
- To contain the fission products, and
- To monitor the state of the plant during and after the accident.

The separation philosophy prevents common cause failures from resulting in loss of any one of these basic safety functions.

The ACR-700 safety systems are separate, to the extent practical, from the process and control systems required for the normal operation of the plant. Separation is also implemented between safety systems as in the case of the two reactor shutdown systems.

Redundant components within safety systems and safety support systems are separate as well, as far as is practical. An example of separation within a safety system is the two divisions of the long term cooling system. Examples of separation within safety support systems are the two divisions within the safety related electrical power and cooling water systems.

These separation features provide protection within each unit against common cause events which may affect extended areas of the plant, and provide assurance that no more than one of two redundant safety systems and no more than one of two redundant divisions within a safety system or a safety support system would be disabled by a common cause event.

Separation and independence also include the provision of a secondary control area as a backup to the main control room for certain emergency conditions.

To increase their reliability, the safety related electrical power and cooling water systems of the two-unit plant are interconnected. These interconnections enable the safety support systems of either unit to be used for the safe shutdown and cooling of the other unit in case the systems of the latter unit are not available, and affords further protection against common cause events on a two-unit integrated basis.

2.1.4 Licensing Process

The ACR-700 builds on the established CANDU safety and licensing framework, predominantly using proven technology and components. However, the ACR-700 design also includes some innovations to safety related systems. The design incorporates features that provide additional margins and improved safety. These innovations are supported by analyses and a research and development (R&D) program. The R&D program's objective is to demonstrate the effectiveness of the innovations and confirm that safety margins achieved on previous plants are maintained or improved upon.

To streamline the licensing process, AECL has asked the CNSC to enter into discussions prior to a formal application for a licence. This licensing process involves the CNSC staff in reviewing the proposed design to identify significant issues that have the potential to impact the schedule for a formal license application. These issues are resolved before the design proceeds to the point where changes are difficult and costly.

2.1.5 Regulatory Documents

In addition to the various legally binding regulations issued pursuant to the Canadian Nuclear Safety and Control Act, the CNSC issues documents on matters related to its regulatory mandate.

These documents refer to the CNSC policies, guides, standards, and other matters, which provide guidance to the licensees on acceptable ways of complying with the regulatory requirements.

The various types of regulatory documents issued by the CNSC are as follows and are listed in Table 2.1-1 and Table 2.1-2:

1. Regulatory Policy: a document that describes the philosophy, principles, and fundamental factors used by the CNSC in regulatory programs.
2. Regulatory Standard: a document that is suitable for use in compliance assessment, and which describes rules, characteristics, or practices that the CNSC accepts as meeting the regulatory requirements.
3. Regulatory Guide: a document that provides guidance or describes characteristics or practices that the CNSC recommends for meeting regulatory requirements or improving administrative effectiveness.
4. Regulatory Notice: a document that provides case-specific guidance or information to alert licensees and others about significant health, safety, or compliance issues that should be acted upon in a timely manner.
5. Regulatory Procedure: a document that describes work processes that the CNSC follows to administer the regulatory requirements for which it is responsible.

2.1.6 Requirements of the International Atomic Energy Agency (IAEA)

The ACR-700 is intended to be licensable internationally. The primary vehicle for establishing the licensability of the design is the assurance that it can be licensed in Canada. Furthermore, the ACR-700 addresses the key requirements of the IAEA to the extent applicable and when not in conflict with the CNSC's requirements.

The IAEA has published a comprehensive set of internationally accepted Nuclear Safety Fundamentals, Requirements, and Guides for nuclear power plants. Participation by scientists and engineers with expertise in all reactor types has resulted in a consistent integration of requirements, including those for CANDU reactors, into the IAEA Safety Standards Series documents.

AECL takes IAEA Nuclear Safety Standards into account during all phases of design, manufacture, construction, and commissioning activities. CANDU designs are thus compatible with IAEA safety guidelines. Table 2.1-3 lists the currently available IAEA safety documents applicable to the design and siting of nuclear power plants.

2.1.7 Safeguards

To be licensed in Canada, the ACR-700 design must meet the requirements of the Nuclear Non-Proliferation and Import and Export Control Regulations of the CNSC. These regulations address the terms and conditions in treaties between Canada and the IAEA.

Canada's commitments to the IAEA for non-proliferation and safeguards are contained in Canada's nuclear export and nuclear non-proliferation policies whose terms and conditions are embodied in legally binding treaties with the IAEA. These treaties include the nuclear Non-Proliferation Treaty (NPT), the agreements listed in References 2-1 and 2-2.

2.1.8 Security

To be licensed and built in Canada, the ACR-700 design must meet the requirements of the Nuclear Security Regulations, listed in References 2-3 and 2-4. These Regulations establish the requirements for the implementation and maintenance of physical protection systems, equipment, and procedures at nuclear facilities.

As a result of recent events, the security and external hazard requirements are evolving. AECL will make proposals on this topic and will discuss this issue further with the CNSC, and other Regulators, as they develop appropriate requirements for nuclear power plants.

2.1.9 Safety Design Requirements

To demonstrate that the ACR-700 design meets all of the applicable safety and licensing requirements, the ACR-700 program has adopted two diverse mechanisms.

The first mechanism is the production of design guides, policies, and procedures. The goal of these documents is to ensure that all work and work processes are undertaken with the applicable requirements fully documented and understood.

The second mechanism is the production of extensive safety assessments. The goal of the safety assessment is to demonstrate that the operation of the station will not pose an unacceptable risk to the public, and to provide feedback to the design process. Essentially, the first mechanism ensures the design process is correct and the second mechanism verifies the results of the process (the design). These two mechanisms are the basis of the project licensing requirements.

2.1.9.1 Regulatory Dose Limits

Radiation exposure to persons, resulting from the normal operation of the ACR-700, will conform to the dose limits given in the CNSC Radiation Protection Regulations. These dose limits are reproduced in Tables 2.1-4 and 2.1-5. Dose limits for postulated accidents are shown in Table 2.1-6 (the limits are derived from References 2-9 and 2-10).

2.1.9.2 Codes and Standards

The design of the ACR-700 is compliant with the Canadian Standards Association's national standards for CANDU plants listed in Table 2.1-7. The international requirements documents listed in Table 2.1-3, are addressed wherever applicable and when not in conflict with the CNSC requirements.

The code classification of pressure retaining components is performed in accordance with the requirements of Reference 2-6.

2.1.9.3 Defence In Depth

The concept of "defence in depth" is applied to all safety activities, whether organizational, behavioural, or design-related. It ensures all safety activities are subject to overlapping provisions, so that if a failure were to occur, it would be detected and compensated for or corrected by appropriate measures. The concept of defence in depth is applied throughout ACR-700 design.

2.1.9.4 Single Failure Criterion

Any system performing a safety function that is required following an accident is designed for high functional reliability, commensurate with the importance of the safety function. Designing this high level of reliability, redundancy, and independence into such systems is in accordance with the single failure criteria (SFC) of the IAEA as stated in their Safety Series Standard No. NS-R-1 (Reference 2-5).

2.1.9.5 Fail Safe Design

Systems and components that are vital to safety are designed to fail to a safe state, as appropriate and to the extent practicable. Generally, it is not feasible to design equipment such that all its possible modes of failure are avoided. However, other engineered safety features are provided that are capable of leading the plant to a safe shutdown state and maintaining barriers such that radioactive materials are confined to within the regulatory limits.

2.1.9.6 Redundancy

- The safety functions of shutdown, ECC, and post-accident operation are backed up at the *system* level.
  - Safety not dependent on the correct functioning of any one system.
- Each safety system has a redundancy at the component or division level to meet the single failure criterion as well as its reliability target.

2.1.9.7 Diversity

- Where practical, systems which perform the same safety function are of different design.

2.1.9.8 Reliability

- Safety systems (shutdown, ECC, containment) are designed to numerical demand availability targets (>0.999).

2.1.9.9 Testability

- Safety systems are testable during operation to demonstrate that the availability targets are met.

2.1.9.10 Safety Design Guides

The safety design guides (SDG) listed in the following sections provide detailed interpretation of the safety and regulatory documents applicable to the development of the ACR-700 design. These documents are used by designers in the execution of their design activities, and are also provided to the Regulator at an early stage in the assessment of the design.

2.1.9.10.1 SDG-001 - Safety Related Systems

This safety design guide identifies the safety related structures and systems that perform nuclear safety functions during normal plant operation and accident conditions. The major safety functions imposed on each identified system are indicated.

2.1.9.10.2 SDG-002 - Seismic Requirements

This safety design guide identifies the systems that may be called upon to provide a safety function during or following an earthquake. A design basis earthquake (DBE) is defined in accordance with CSA Standard N289.1 “General Requirements for Seismic Qualification of CANDU Nuclear Power Plants” (Reference 2-7).

2.1.9.10.3 SDG-003 - Environmental Qualification

This safety design guide describes the environmental qualification plan and lists the plant systems or components that must be qualified to withstand adverse environmental conditions due to accidents. Environmental qualification of the equipment must be carried out to demonstrate that the required safety function can be maintained.

2.1.9.10.4 SDG-004 - Separation of Systems and Components

This safety design guide defines the requirements for physical separation between safety related systems, and between redundant components within each system. The objective is to ensure that the required safety functions are maintained for common cause events that affect multiple systems of components within a limited area of the plant.

2.1.9.10.5 SDG-005 - Fire Protection

This safety design guide details the requirements of CSA standard N293, “Fire Protection for CANDU Nuclear Power Plants” (Reference 2-8).

2.1.9.10.6 SDG-006 - Containment

This safety design guide interprets and provides guidance to the designers on containment and containment extension requirements, which are encompassed in the CNSC Regulatory Document R-7 (Reference 2-11).

2.1.9.10.7 SDG-007 - Radiation Protection

This safety design guide details the radiation protection design requirements for station dose budget, access control, contamination control, shielding, waste management, radiation monitoring, a radiation exposure control program, and post-accident habitability. It also defines the application of the ALARA principle.

2.1.10 Safety Analysis Requirements

Safety initiatives include accident prevention and mitigation by quality design, fabrication and construction, inspection, maintenance and testing of components, careful site selection, design of an appropriate operator interface, and operator training. A complementary activity is investigating the response of nuclear power plants to a postulated set of design basis accidents. Ensuring that doses to members of the public and the operating staff are limited for these events has been one important way of making sure that the public is protected.

2.1.10.1 General Requirements

A systematic "safety assessment" is carried out throughout the design process to ensure that all the relevant safety requirements are met by the proposed and actual design of the plant.

2.1.10.2 Scope of Safety Assessment

The scope of the safety assessment is to verify that the design meets the requirements for the management of safety, technical requirements, plant design and plant system design requirements, and that a comprehensive safety analysis has been carried out. Safety analysis of ACR-700 will follow the approach of the documents in References 2-9 and 2-10.

2.1.10.3 Elements of the Safety Analysis Program

The overall ACR-700 comprehensive accident assessment program contains the following elements[1]:

1. Systematic Review
2. Probabilistic Safety Assessment including internal events, shutdown states, external events, except for seismic events, and severe accidents

---

[1] The "elements" are not necessarily executed in the order presented.

3. Safety Analysis Basis Documents
4. Safety Analysis Data List
5. Consequence Analysis
6. Seismic Margin Assessment

2.1.10.4 Safety Analysis Process

The safety analysis of a nuclear power plant is approached through a process that includes:

1. Identifying initiating events;
2. Classifying events and identifying bounding event sequences;
3. Selecting an appropriate analysis method for each event to be analysed;
4. Conducting the analysis; and
5. Assessing the results against the acceptance criteria.

The safety analysis deals primarily with radiological hazards. Some non-radiological hazards are identified, such as fires and floods; however, the focus of the analysis is on their impact on reactor safety.

2.1.10.5 Safety Analysis Computer Codes

The computer codes used in the safety analysis of the first and all subsequent ACR-700 projects are validated, verified, documented, and controlled as per the AECL Quality Assurance Manual for Analytical, Scientific and Design Computer Codes and CSA Standard N286.7.

2.1.10.6 Best Estimate And Uncertainty Analysis

When traditional limit of operating envelope (LOE) analyses for design basis events do not indicate significant margins, an alternative is to use the best estimate and uncertainty (BEAU) method.

The Canadian nuclear industry is implementing best estimate and uncertainty methods to establish realistic safety margins considering uncertainty in codes, data and plant state.

2.1.10.7 Acceptance Criteria

Acceptance criteria are set for analysis of events within the design basis to demonstrate that the safety design requirements (Section 2.1.9) are met. Acceptance criteria are in two levels as follows:

- Global, high level criteria that relate to doses to the public in an accident. These are defined by the Regulator.

- Detailed criteria that relate to the integrity of the physical barriers against the release of radioactivity to the environment.
- In addition, targets may be set at a more detailed level for other performance and reliability parameters.

2.1.10.8 Probabilistic Safety Assessment

More recently, probabilistic safety assessments (PSAs) have been used to perform analyses to determine the risks arising from plant operation in a more integrated way. PSAs have proven to be of value in providing feedback from past similar designs, identifying dominant risk contributors and assessing design options at an early stage to improve safety. A PSA is scheduled to be performed for ACR-700.

2.1.10.9 Severe Accident Assessment

A "severe accident" state has been defined, for CANDU reactors as one, which precludes removal of heat generated in the fuel by coolant in the primary system. Licensing regulations in Canada require consideration of this state. These events are categorised as limited core damage accidents (LCDA) and those, which progress to severe core damage accidents (SCDA).

LCDA are improbable events, which must be accommodated within specified radiological dose limits to the public. Most LCDA are combinations of an initiating event and total failure of a safety system. In such cases fuel cooling is maintained by the presence of heavy water moderator acting as a heat sink.

SCDAs are extremely improbable events, involving loss of moderator as a heat sink, which could lead to loss of core geometry. Fuel cooling for these events, is provided by the large volume of water in the end shields and calandria vault. While the calandria alone may not prevent some fuel melting if the moderator is lost, it can enable the retention of partly melted debris.

2.1.10.10 Application of Lessons Learned from Previous Severe Accidents

The ACR-700 program is planned to comply with all applicable post Three Mile Island-2 and Chernobyl-4 accident implication requirements, identified in CNSC and US NRC documents.

2.1.10.11 Safety Analysis Reports

A safety analysis report (SAR) is prepared for each project for the demonstration of the safety adequacy of the plant. The safety analysis report is an important link between the operating organization and the regulatory body, since it is one of the main documents for the licensing of the reactor.

An outline of the Table of Contents of the ACR-700 Safety Analysis Report is given in Table 2.1-9.

Table 2.1-1
CNSC Regulations and Regulatory Documents

Regulations	
Title	
Nuclear Safety and Control Act	
General Nuclear Safety and Control Regulations	
Radiation Protection Regulations	
Class I Nuclear Facility Regulations	
Class II Nuclear Facilities and Prescribed Equipment Regulations	
Nuclear Substances and Radiation Devices Regulations	
Nuclear Security Regulations	
Nuclear Non-Proliferation and Import and Export Control Regulations	
Regulatory Documents	
Number	**Title**
R-7	Requirements for Containment Systems for CANDU Nuclear Power Plants
R-8	Requirements for Shutdown Systems for CANDU Nuclear Power Plants
R-9	Requirements for Emergency Core Cooling Systems for CANDU Nuclear Power Plants
R-10	The Use of Two Shutdown Systems in Reactors
R-77	Overpressure Protection Requirements for Primary Heat Transport System in CANDU Power Reactors Fitted with Two Shutdown Systems
R-90	Policy on the Decommissioning of Nuclear Facilities
R-91	Policy on Monitoring and Dose Recording for the Individual
R-99	Reporting Requirements for Operating Nuclear Power Facilities
R-100	The Determination of Effective Doses from the Intake of Tritiated Water
R-105	The Determination of Radiation Doses from the Intake of Tritium Gas
R-117	Requirements for Gamma Radiation Survey Meter Calibration
Regulatory Policies	
P-119	Policy on Human Factors
P-211	CNSC Compliance Policy
P-223	Policy on Protection of the Environment
P-242	Considering Cost Benefit Information

Regulatory Standards		
Number	**Title**	**Date**
S-98	Reliability Programs for Nuclear Power Plants	2001/12
S-99	Reporting Requirements for Operating Nuclear Power Plants	2003/03
S-106	Technical and Quality Assurance Standards for Dosimetry Services in Canada	1998/03
Regulatory Guides		
G-91	Ascertaining and Recording Radiation Doses to Individuals	2003/06
G-129	Guidelines on How to Meet the Requirement to Keep All Exposures As Low As Reasonably Achievable	1997/09
G-149	Computer Programs Used in Design and Analysis of Nuclear Power Plants and Research Reactors	2000/10
G-205	Entry to Protected and Inner Areas	2003/11
G-206	Financial Guarantees for the Decommissioning of Licensed Activities	2000/06
G-219	Decommissioning Planning Guide for Licensed Activities	2000/06
G-225	Emergency Planning at Class 1 Nuclear Facilities	2001/08
G-228	Developing and Using Action Levels	2001/03
G-274	Security Programs for Category I or II Nuclear Material or Certain Nuclear Facilities	2003/03
G-276	Human Factors Engineering Program Plans	2003/06
G-276	Human Factors Verification and Validation Plans	2003/06

Table 2.1-2
CNSC Consultative Documents

Number	Title	Date
C–006R1 E[(1)] (Draft Guide)	Requirements for the Safety Analysis of CANDU Nuclear Power Plants	1999/09
S-213	Quality Assurance Programmes for Nuclear Facilities	2004/03
C-138	Software in Protection and Control Systems	1999/10
C-144	Trip Parameter Acceptance Criteria for the Safety Analysis of CANDU Nuclear Power Plants	1997/10
G-129 R1	Guidelines on How to Meet the Requirement to Keep All Exposures As Low As Reasonably Achievable	2004/02

Notes: C–006, Rev 1E was issued for public comment in 1999 September. It is expected to be issued as a Regulatory Guide. The safety analysis process, to be followed for ACR-700, is outlined in Section 2.1.10 of this document.

Table 2.1-3
IAEA Codes and Standards – Preliminary List

Organization	Document Number	Title
IAEA	NS-R-1	Safety of Nuclear Power Plants : Design
IAEA	NS-R-2	Safety of Nuclear Power Plants : Operation
IAEA	NS-G-1.1	Software for Computer Based Systems Important to Safety in Nuclear Power Plants
IAEA	NS-G-1.2	Safety Assessment and Verification of Nuclear Power Plants
IAEA	NS-G-1.3	Instrumentation and Control Systems Important to Safety in Nuclear Power Plants
IAEA	NS-G-2.1	Fire Safety in the Operation of Nuclear Power Plants
IAEA	NS-G-2.2	Operational Limits and Conditions and Operating Procedures
IAEA	NS-G-3.2	Dispersion of Radioactive Material in Air and Water and Consideration of Population Distribution in Site Evaluation
IAEA	50-SG-D1	Safety Functions and Component Classification for BWR, PWR, and PTR
IAEA	50-SG-D4(1)	Protection Against Internally Generated Missiles and their Secondary Effects in Nuclear Power Plants
IAEA	50-SG-D5 (1)	External Man-Induced Events in Relation to Nuclear Power Plants
IAEA	50-SG-D6 NS 282(2)	Ultimate Heat Sink and Directly Associated Heat Transport Systems for Nuclear Power Plants
IAEA	50-SG-D7 (1)	Emergency Power Systems at Nuclear Power Plants
IAEA	50-SG-D9(1)	Design Aspects of Radiation Protection for Nuclear Power Plants
IAEA	50-SG-D10 NS 276(2)	Fuel Handling and Storage Systems in Nuclear Power Plants
IAEA	50-SG-D11 NS 253(2)	General Design Safety Principles for Nuclear Power Plants
IAEA	50-SG-D12(1)	Design of the Reactor Containment Systems in Nuclear Power Plants
IAEA	50-SG-D13	Reactor Coolant and Associated Systems in Nuclear Power Plants
IAEA	50-SG-D14 NS 283(2)	Design for Reactor Core Safety in Nuclear Power Plants
IAEA	50-SG-D15(1)	Seismic Design and Qualification for Nuclear Power Plants
IAEA	50-P-1	Application of the Single Failure Criterion
IAEA	50-P-2	In-service Inspection of Nuclear Power Plants
IAEA	50-P-3	Data Collection and Record Keeping for the Management of Nuclear Power Plant Ageing
IAEA	50-P-4	Procedures for Conducting Probabilistic Safety Assessments of Nuclear Power Plants (Level 1)
IAEA	50-P-5	Safety Assessment of Emergency Power Systems for Nuclear Power Plants
IAEA	50-P-6	Inspection of Fire Protection Measures and Fire Fighting Capability at Nuclear Power Plants
IAEA	50-P-7	Treatment of External Hazards in Probabilistic Safety Assessment for Nuclear Power Plants

Organization	Document Number	Title
IAEA	50-P-8	Procedures for Conducting Probabilistic Safety Assessments of Nuclear Power Plants (Level 2): Accident Progression, Containment Analysis and Estimation of Accident Source Terms
IAEA	50-P-9	Evaluation of Fire Hazard Analyses for Nuclear Power Plants
IAEA	50-P-10	Human Reliability Analysis in Probabilistic Safety Assessment for Nuclear Power Plants
IAEA	50-P-11	Assessment of the Overall Fire Safety Arrangements at Nuclear Power Plants
IAEA	50-P-12	Procedures for Conducting Probabilistic Safety Assessments of Nuclear Power Plants (Level 3): Off-Site Consequences and Estimation of Risks to the Public

Notes for Table 2.1-3:

General: Compliance with the IAEA standards is to the extent applicable to the design of the plant and where not in conflict with the CNSC requirements.

(1) Currently under revision by the IAEA

(2) Currently an IAEA draft

Table 2.1-4
Effective Dose Limits for Normal Operation

Item	Person	Period	Effective Dose (mSv)
1.	Nuclear energy worker	a) one year dosimetry period	20
		b) five year dosimetry period	100
2.	Pregnant nuclear energy worker	Balance of the pregnancy	1*
3.	A person who is not a nuclear energy worker	One calendar year	1

Note (*): The CNSC radiation dose limit is 4 mSv. The dose limit, 1 mSv, is set as per the international consensus. This requirement is satisfied by administrative measures rather than by plant design.

Table 2.1-5
Equivalent Dose Limits for Normal Operation

Item	Organ or Tissue	Person	Period	Equivalent Dose (mSv)
1.	Lens of an eye	a) Nuclear energy worker	One year dosimetry period	150
		b) any other person	One calendar year	15
2.	Skin (averaged over 1 cm^2 that receives highest dose)	a) Nuclear energy worker	One year dosimetry period	500
		b) Any other person	One calendar year	50
3.	Hands and feet	a) Nuclear energy worker	One year dosimetry period	500
		b) Any other person	One calendar year	50

Table 2.1-6
Dose and Release Limits for Postulated Accidents

Requirement	**Event Class**				
	1	**2**	**3**	**4**	**5**
Effective dose (mSv)	0.5	5	30	100	250
Lens of the eye (mSv)	5	50	300	1,000	1,500
Skin (mSv averaged over 1 cm^2)	20	200	1,200	4,000	5,000
30 day emissions of liquid effluent are within the derived annual emission limits for normal operation	T	T	N	N	N

T – the limit shall be met by the worst failure sequence in the event class

N – not required

Table 2.1-7
CAN/CSA Codes and Standards (National Standards of Canada)

Preliminary List

Document Number	Title
CAN/CSA–N285.0	General Requirements for Pressure–Retaining Systems and Components in CANDU Nuclear Power Plants
CAN/CSA–N285.2	Requirements for Class 1C, 2C and 3C Pressure–Retaining Components and Supports in CANDU Nuclear Power Plants
CAN/CSA–N285.3	Requirements for Containment Systems Components in CANDU Nuclear Power Plants.
CAN/CSA–N285.4	Periodic Inspection of CANDU Nuclear Power Plant Components.
CAN/CSA–N285.5	Periodic Inspection of CANDU Nuclear Power Plant Containment Components.
CAN/CSA–N285.6	Material Standards for Reactor Components for CANDU Nuclear Power Plants.
CSA N286.0.1-92	Commentary on the Principles for Quality Assurance Programs of CSA N286 Series Standards.
CAN/CSA–N286.0	Overall Quality Assurance Program Requirements for Nuclear Power Plants.
CAN3–N286.1	Procurement Quality Assurance for Nuclear Power Plants
CSA N286.2	Design Quality Assurance for Nuclear Power Plants
CSA N286.3	Construction Quality Assurance for Nuclear Power Plants
CAN/CSA–N286.4	Commissioning Quality Assurance for Nuclear Power Plants.
CSA N286.5	Operations Quality Assurance for Nuclear Power Plants.
CSA N286.6	Decommissioning Quality assurance for Nuclear Power Plants
CSA N286.7	Quality Assurance of Analytical, Scientific, and Design Computer Programs for Nuclear Power Plants
CSA N287.1	General Requirements for Concrete Containment Structures for CANDU Nuclear Power Plants.
CAN/CSA–N287.2	Material Requirements for Concrete Containment Structures for CANDU Nuclear Power Plants.
N287.3	Design Requirements for Concrete Containment Structures for CANDU Nuclear Power Plants.
CAN/CSA–N287.4	Construction, Fabrication and Installation Requirements for Concrete Containment Structures for CANDU Nuclear Power Plants.
CSA N287.5	Examination and Testing Requirements for Concrete Containment Structures for CANDU Nuclear Power Plants.
CSA N287.6	Pre–Operational Proof and Leakage Rate Testing Requirements for Concrete Containment Structures for CANDU Nuclear Power Plants
CAN/CSA N287.7	In–Service Examination and Testing Requirements for Concrete Containment Structures for CANDU Nuclear Power Plants.
CAN/CSA–N288.1	Guidelines for Calculating Derived Release Limits for Radioactive Material in Airborne and Liquid Effluents for Normal Operation of Nuclear Facilities
CAN/CSA–N288.2	Guidelines for Calculating Radiation Doses to the Public from a Release of Airborne Radioactive Material under Hypothetical Accident Conditions in Nuclear Reactors

Document Number	Title
CAN3–N288.3.2	High Efficiency Air–Cleaning Assemblies for Normal Operation of Nuclear Facilities
CAN/CSA–N288.4	Guidelines for Radiological Monitoring of the Environment
CAN3–N289.1	General Requirements for Seismic Qualification of CANDU Nuclear Power Plants
CAN3–N289.2	Ground Motion Determination for Seismic Qualification of CANDU Nuclear Power Plants
CAN3–N289.3	Design Procedures for Seismic Qualification of CANDU Nuclear Power Plants
CAN3–N289.4	Testing Procedures for Seismic Qualification of CANDU Nuclear Power Plants
CAN/CSA–N289.5	Seismic Instrumentation Requirements for CANDU Nuclear Power Plants
CAN3–N290.1	Requirements for the Shutdown Systems of CANDU Nuclear Power Plants
CAN3–N290.4	Requirements for the Reactor Regulating Systems of CANDU Nuclear Power Plants
CAN/CSA–N290.5	Requirements for the Support Power Systems of CANDU Nuclear Power Plants.
CAN3–N290.6	Requirements for Monitoring and Display of CANDU Nuclear Power Plant Status in the Event of an Accident
CSA–N292.2	Dry Storage of Irradiated CANDU Fuel
CSA N293	Fire Protection for CANDU Nuclear Power Plants

Notes for Table 2.1-7:

General: (1) The Canadian Standards Association Standards may call up other International Standards that are applicable. Standards prepared by ASME and ANSI for pressure vessels and piping are applied in this manner.

(2) Compliance with the codes and standards is only to those requirements applicable to the design of the plant.

Table 2.1-8
List of Safety Design Guides

Safety Design Guide	Title
108-03650-SDG–001	Safety related Systems
108-03650-SDG–002	Seismic Requirements
108-03650-SDG–003	Environmental Qualification
108-03650-SDG–004	Separation of Systems and Components
108-03650-SDG–005	Fire Protection
108-03650-SDG–006	Containment
108-03650-SDG–007	Radiation Protection

Table 2.1-9
Safety Analysis Report - Table of Contents Outline

Chapter	Title
Chapter 1	Introduction and Summary Description
Chapter 2	Site Characteristics
Chapter 3	Design of Structures and Systems
Chapter 4	Reactor
Chapter 5	Reactor Process Systems
Chapter 6	Safety Systems
Chapter 7	Instrumentation and Controls
Chapter 8	Electrical Power Systems
Chapter 9	Auxiliary and Service Systems
Chapter 10	Turbine Generator and Auxiliaries
Chapter 11	Radioactive Waste Management
Chapter 12	Radiation Protection
Chapter 13	Conduct of Operations
Chapter 14	Initial Test Program
Chapter 15	Accident Analyses
Chapter 16	Technical Specifications
Chapter 17	Quality Assurance
Chapter 18	Human Factors Engineering

2.2 Quality Assurance

The ACR quality assurance (QA) program meets the AECL Corporate Quality Policy as defined in the AECL Overall Quality Assurance Manual (Reference 2-12) and meets the quality assurance requirements of the applicable parts of the Canadian Standard N286.2-00 Design Quality Assurance for Nuclear Power Plants. It is supported by various procedural documents including policies, procedures, and operating instructions.

The ACR QA Program is defined in the ACR QA Manual. This manual provides statement of applicability, organization, roles and responsibilities, interfaces and company-wide and project-specific procedures for performing, verifying and assessing design and engineering activities.

If a portion of the ACR Development Project work is subcontracted to another group, within or outside of AECL, those organizations shall either follow the requirements of this program, or they shall follow their own QA program, provided their QA program is acceptable to the ACR development project and provided their program meets the requirements of the applicable QA standards.

ACR management ensures that the products and services provided by subcontractors meet the requirements of the contract, including compliance with specified quality standards.

2.3 Plant Layout

2.3.1 General

The plant layout developed for the ACR-700 design is based on the past experience of CANDU sites with single unit, two and four unit arrangements. Based on the feedback from the operating CANDU plants and recent site evaluations, the optimum layout, from design, capital cost, construction and operation and maintenance considerations is an integrated two-unit ACR-700 plant arrangement. The major buildings and structures associated with the overall site arrangement are as follows:

- Reactor Buildings (2),
- Reactor Auxiliary Buildings (2) (includes Secondary Control Areas),
- Turbine Buildings (2),
- Main Control Building,
- Service Building,
- Maintenance Building
- CCW Pumphouse,
- RSW Pumphouse,
- Diesel Generator Buildings,
- Main Switchyard,
- Water Treatment Facility, and
- Auxiliary and Ancillary Structures.

A typical two-unit ACR-700 site layout, showing the arrangement and location of various buildings and structures to each other is shown in Figure 2.3-1. It is to be noted that the site layout can be readily adjusted to suit a specific site, however the basic arrangement of the power block, consisting of reactor buildings, reactor auxiliary buildings, Turbine buildings, service building, main control building and maintenance building would be retained. Examples of site adaptation are utilization of cooling tower at sites with limited cooling water availability and fire water reservoir and fire water pumphouse for salt water sites.

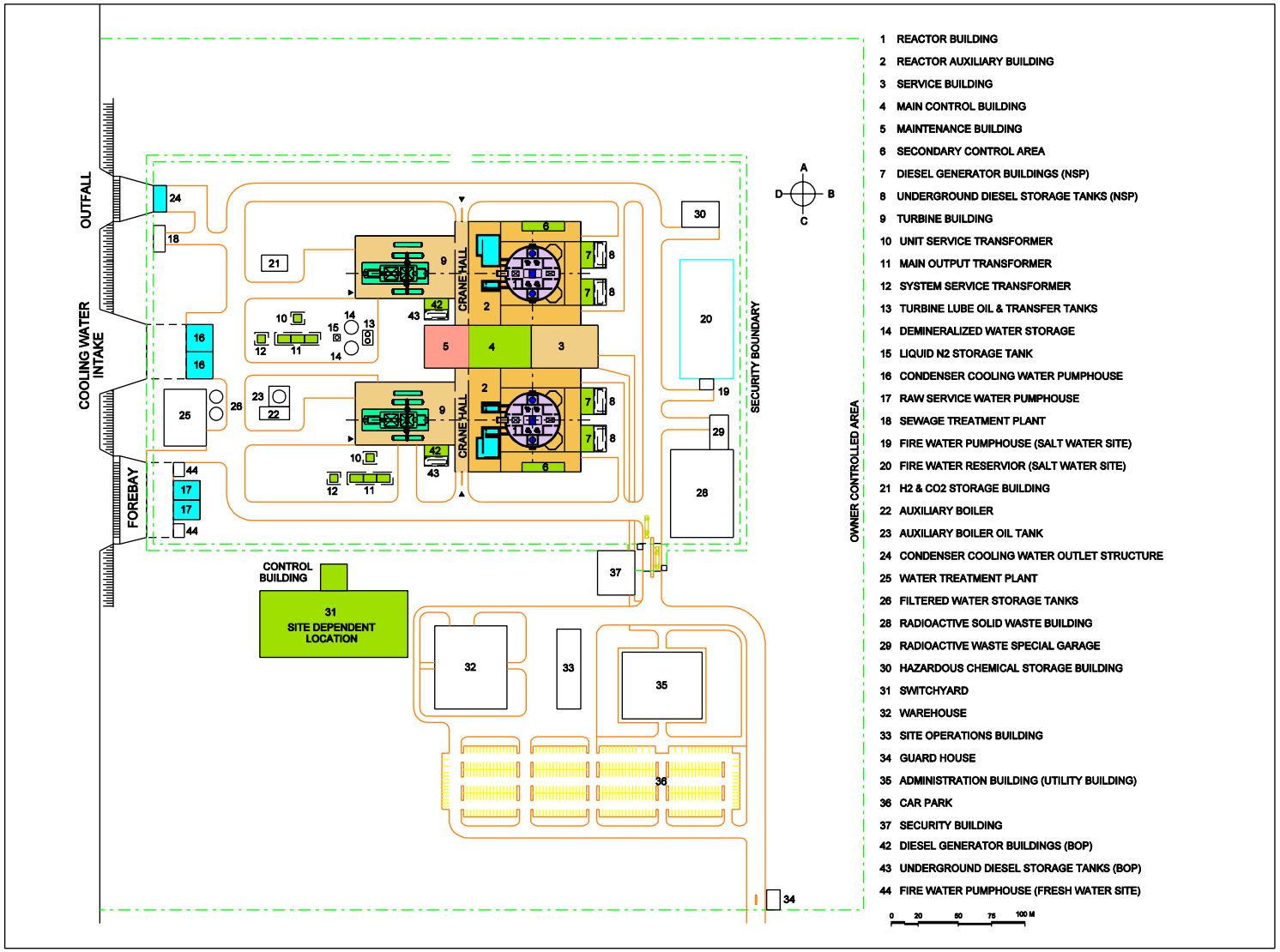

Figure 2.3-1 Typical Two-Unit Plant Layout

2.3.2 Layout Approach

The layout approach is to house all safety systems, safety support systems, and reactor monitoring systems in buildings which are qualified for design basis earthquake and design basis tornado.

Accordingly, the reactor building and the reactor auxiliary building house all the nuclear systems and safety systems and the majority of the safety support systems, the main steam safety valves and isolation valves are located in an enclosure on the roof of the reactor auxiliary building. The safety support systems are located in the reactor auxiliary building, the RSW pumphouse, the secondary control area, and in the main control building. Through physical separation, the plant layout minimizes the potential for common cause events that could impact both units at the same time. The layout also ensures that either or both of the two units can be safely shut down for common cause events that may affect the whole site.

Based on the redundancy and separation approach utilized for the ACR-700 plant, two redundant divisions of safety support systems are located in physically separated areas. The main control room, located in the main control building, is shared between the two units. A secure route is provided for the operator to move from the main control room to the seismically qualified secondary control area, which is located remotely from the main control building, following an event that causes a loss of operability or habitability of the main control room.

2.3.3 Orientation and Elevations

The orientation of the ACR-700 on the site is defined by the reference directions, designated A, B, C, and D, as shown on all layout drawings and illustrations (see Figure 2.3-1).

The top of the reactor building base slab is at elevation 100.0 m, with the main airlock sill set at 106.0 meters. The grade level elevation is 106.0 m. All site drawings, including construction drawings, are based on the 100 m reference elevation.

A section of the main power block is shown in Figure 2.3-2 identifying the elevations of the major buildings.

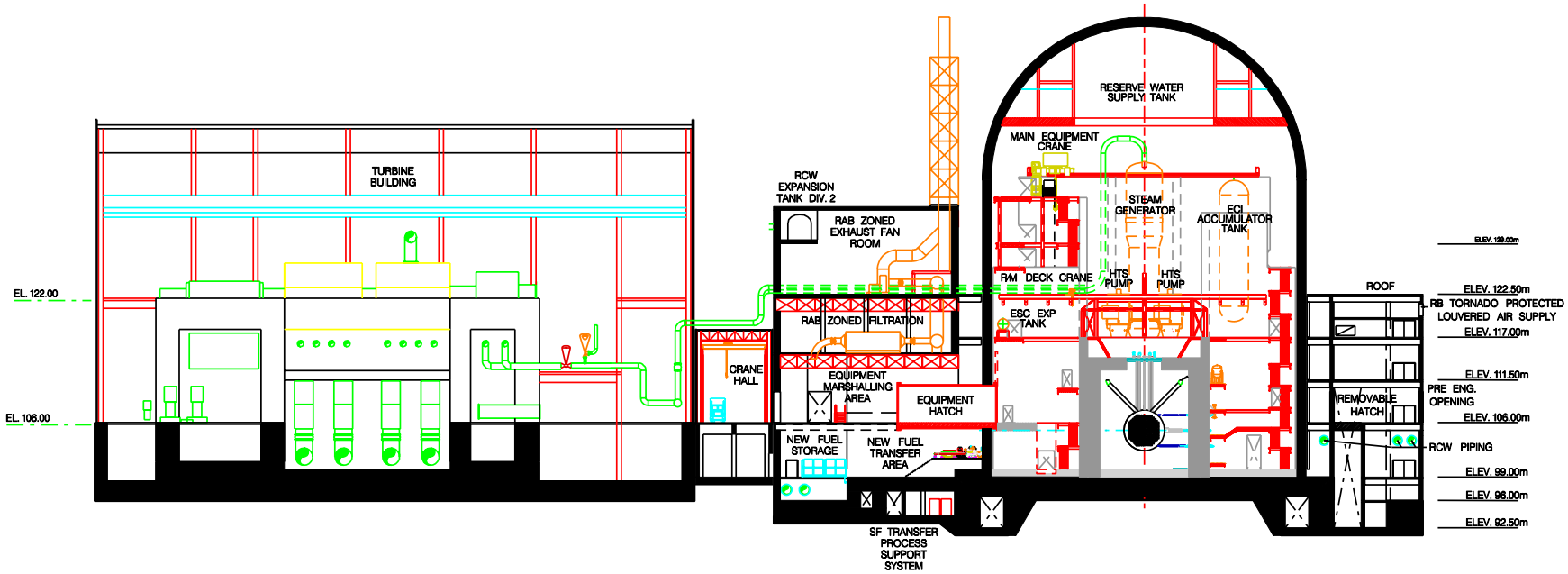

Figure 2.3-2 ACR-700 Major Building Elevations

2.4 Construction Methods

Building on experiences from previous CANDU 6 projects, the ACR-700 design takes advantage of advanced design and construction methods implemented by AECL in the CANDU 6 Qinshan project. More recent advancements in these design methods and construction technologies are being integrated into the ACR-700 to achieve further reductions in project cost and schedule. The ACR-700 construction layout for the principal structures is shown in Figure 2.4-1.

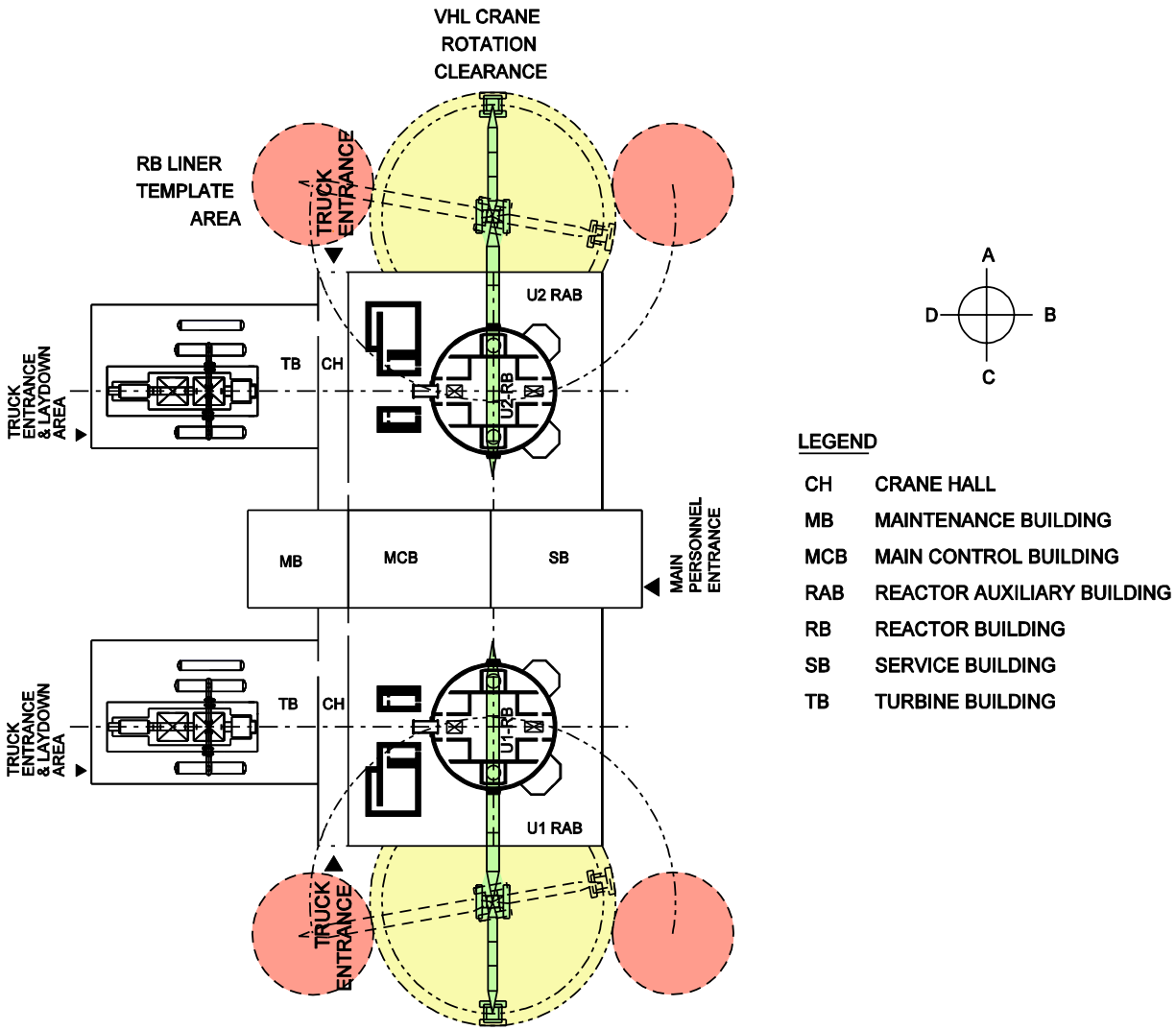

Figure 2.4-1 ACR-700 Construction Templates for the RB and RAB Using Very Heavy Lift (VHL) Cranes

During construction, equipment installation for the reactor building is provided vertically through the open top method and horizontally through the main airlock opening, on the 'D' side at grade level. Access to the main airlock is via the crane hall, which provides access across the entire 'D' side of the reactor auxiliary building. There is drive-in access to the airlock in each unit. Full access is provided on two opposite sides of the reactor building/reactor auxiliary building even when both units are under construction at the same time, as shown in Figure 2.4-2.

The turbine buildings are arranged perpendicular to the reactor centreline and have access on all four sides to allow construction to proceed in parallel with the reactor buildings and reactor auxiliary buildings.

The remaining buildings have access on more than one side, in addition to top access, for equipment and personnel throughout the construction period. This layout facilitates construction by accommodating several construction contractors and by providing flexibility in the equipment installation sequence.

Parallel construction methods, prefabricated modules and up-to-date construction techniques are incorporated in ACR-700 design. These are discussed in the following subsections.

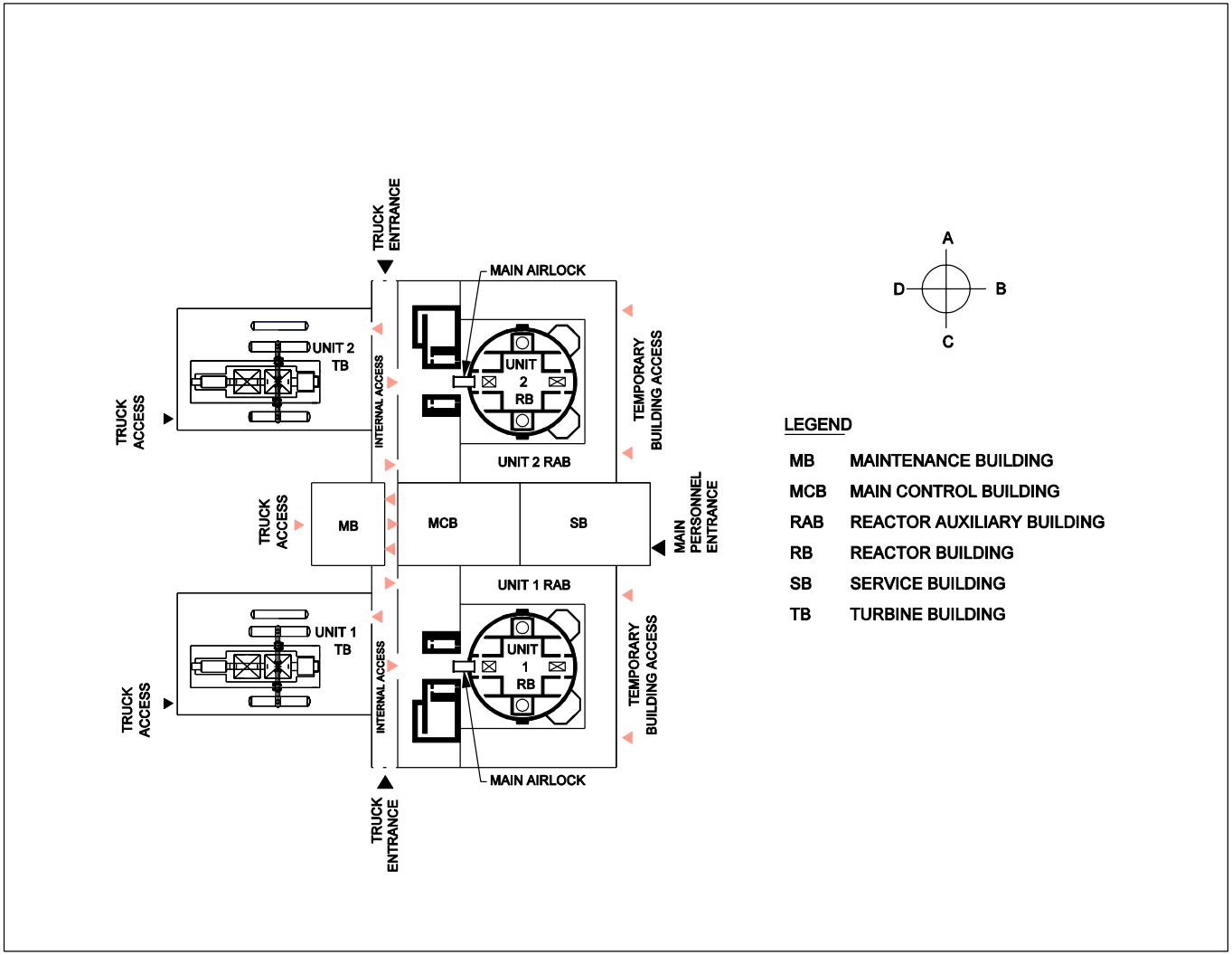

Figure 2.4-2 ACR-700 Construction Access for the Principal Structures

2.4.1 Open Top Construction

Recent developments in very large mobile cranes have made the installation of very large prefabricated modules very practical. This eliminates the need for temporary openings in the containment wall. Very heavy lift (VHL) cranes have made it possible to leave the top off the containment structure and install the internals through the "open top" of the reactor building. This method of construction using VHL cranes has been used successfully in the construction of the CANDU 6 Qinshan Phase III units, and large-scale modularization has been demonstrated to be effective on both nuclear and non-nuclear large-scale construction projects, throughout the world.

Open top construction in the ACR-700 is optimized through installation of all major equipment, modules, and materials through the top of the reactor building using external cranes. This not only applies to heavy lifts using the VHL crane but also to all material lifts using tower cranes that have capacities up to a maximum of 20 tonnes. The advantages of using a crane for installing equipment/modules include:

- Improved access
- Shorter durations for activities
- Greater schedule logic flexibility
- Simpler rigging

In addition, elimination of temporary openings in the reactor building wall provides improvement in containment quality and helps to reduce the construction effort.

2.4.2 Parallel Construction

The ACR-700 construction sequence facilitates the extensive use of parallel construction. Modularization and prefabrication are ideal techniques to support this strategy as the modules can be fabricated in a shop while the civil work is progressing towards being ready to receive them. Major blocks of work are separated into mini-projects so that they can be constructed concurrently. Durations for traditional activities are not greatly changed, but the sequencing logic is very different. This is the key to achieving short construction schedules.

2.4.3 Prefabrication / Modularization

Extensive prefabrication/modularization is being implemented to achieve the ACR-700 schedule targets. The use of prefabrication/modularization techniques improves the quality of the construction and shortens the schedule through parallel construction activities both on site and at the module fabrication shop. This also permits greater flexibility in construction sequences, in addition to reducing site congestion by moving work off-site, and reduces construction costs and project schedule. There are also many other advantages of prefabrication/modularization that contribute indirectly to meeting the construction schedule, cost targets and overall improvements in quality of construction.

A typical module developed for the ACR-700 is shown in Figure 2.4-2.

2.4.4 Up-to-Date Construction Technologies

The following up-to-date construction technologies contribute significantly to achieving a shortened construction schedule:

- Climbing Formwork.
- Prefabricated Rebar.
- Large Volume Pours.
- Bridging Systems.
- Prefabricated Permanent Formwork.
- Pipe Bending.
- Automatic Welding.
- 3D Computer Aided Design and Drafting.

2.4.5 Building Construction

2.4.5.1 Reactor Building (RB)

The open-top construction strategy is applied to optimize the construction sequence of the reactor building and thus reduce the construction schedule. The containment building is a steel-lined, reinforced and pre-stressed concrete structure and will be jump formed. The wall and dome steel liner is fabricated in large rings on the ground and then lifted into place. The base slab is constructed as one-piece pour using low-heat concrete.

The internal concrete structure is designed to accommodate a vertical installation approach. In this approach, the internal structure walls are constructed initially without floors and the floors are added later as part of the modules. To improve the constructability of the internal structure, standard internal wall configuration is maintained through all elevations. This allows the creation of standard vertical building volumes. While the internals and containment walls are progressing, modules and equipment are manufactured away from the building to obtain maximum paralleling of activities and reduction of on-site congestion.

As civil construction on each vertical volume is nearly complete and ready to begin installation activities, equipment begins to arrive on site. Each vertical construction volume is filled up through the top with a combination of floors, equipment, and modules, which are stacked one on top of another and progressively attached to the walls. In some locations, the floors are built in conjunction with the process systems, , to be installed as complete floor / system modules.

The construction method for the internal structure has the major advantage of allowing equipment and modules to be installed later in the construction schedule due to the relative

autonomy of adjacent vertical construction volumes. This reduces the overall project risk associated with individual equipment delays. The scale of modularization available with this construction approach allows for a high proportion of the reactor building internal systems to be completed as modules off-site.

A detailed construction sequence was developed for the ACR-700 reactor building containment structure, internal structure, and installation of the major equipment and systems. Figure 2.4-3 shows part of the 30-step construction sequence developed for the reactor building, which is based on the 60-month schedule for the first unit of a series from CED to I/S, which has a construction period of 40 months from First Concrete date to Fuel Load date. With feedback from the construction of the first few units, and with the familiarization of construction technique attained, the project schedule will be reduced to 48 months, for the nth unit, from the contract effective date (CED) to in-service with a 36 month construction period from First Concrete to Fuel Load.

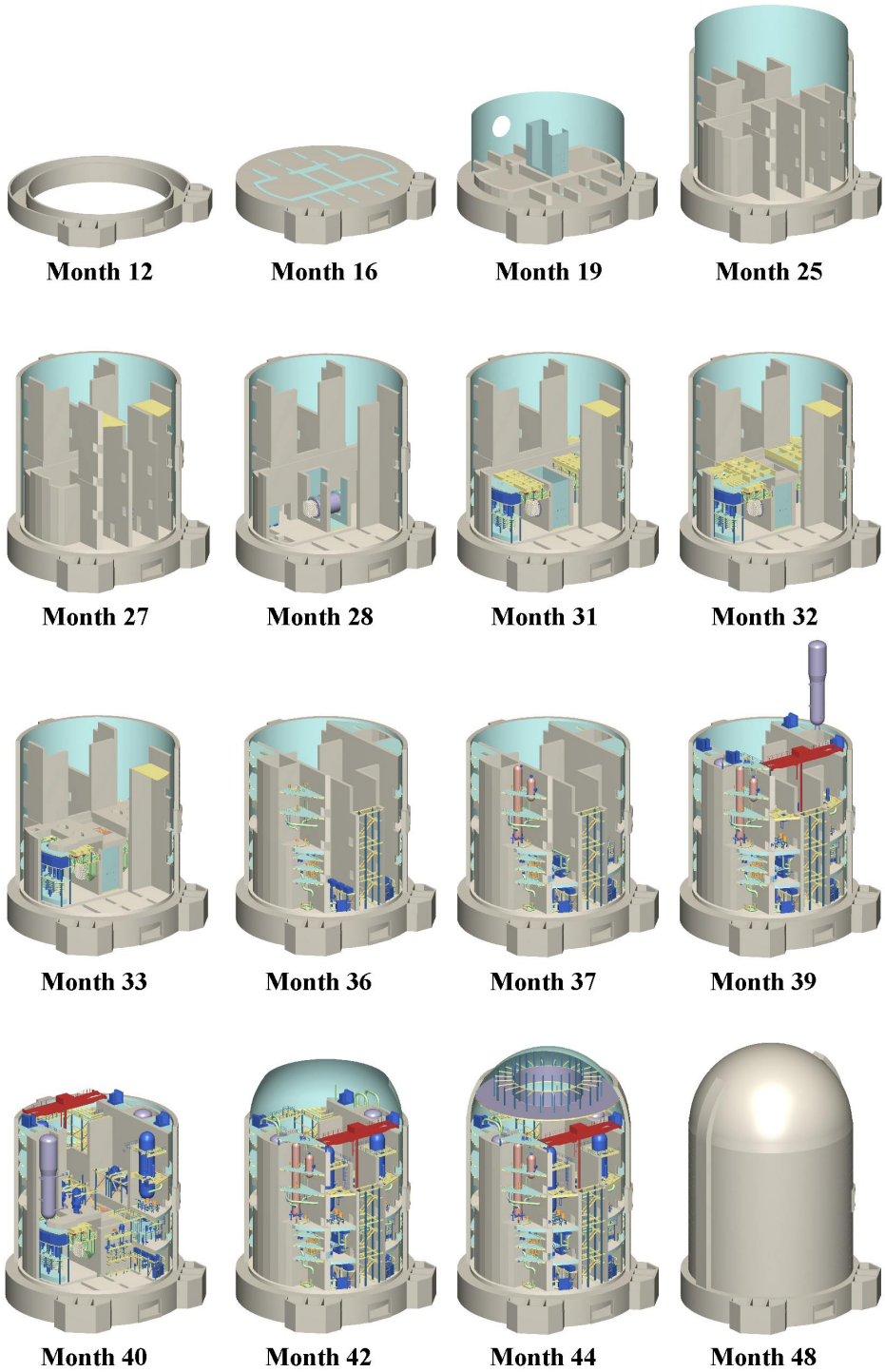

Note: The plant will be in service in Month 60.

Figure 2.4-3 ACR-700 Construction Sequence for 1st Unit (60 Month Schedule)

2.4.5.2 Reactor Auxiliary Building

The reactor auxiliary building is a reinforced concrete/structural steel structure. To optimize the construction time for this building, the same column spacing is maintained to facilitate the use of standardized formwork and precast concrete members.

Prefabrication for floors and modularization for walls are utilized as much as possible for floor construction, and modularization is also possible for other components, such as stair and elevator shafts.

The reactor auxiliary building has excellent access and large freight elevators to facilitate access for workers, construction materials, and equipment. The standardized spacing between floors allows room for routing of cables and ducting without interfering with construction activities and material access.

2.4.5.3 Turbine Building

The construction sequence for the turbine building has been optimized for delivery of pretubed condenser modules and the turbine generator assembly. The VHL crane can be used for condenser installation. Work on the turbine building roof is always difficult and dangerous because of the height and span, so major modules have been developed that consist of several roof trusses and bracing complete with all services, and which can be finish painted and lifted into place using the VHL crane. The turbine building permanent bridge crane can also be placed on its rails in one fully assembled piece using the VHL crane.

Modular construction techniques have already been employed in many areas of the BOP where construction delays are traditionally found. Major vessels, modules, and equipment such as the deaerator, reheaters/separators, and generator stator are installed with the VHL crane and carefully sequenced with turbine building construction.

2.4.6 Module Implementation Strategy

2.4.6.1 Design Process

Modularisation for the ACR-700 is achieved through a multidisciplinary team. A dedicated team is responsible for coordinating the design and producing design deliverables for the modules. During initial layout of the building, a multidisciplinary team is involved in selecting the best locations for systems and equipment and deciding on optimum locations and configurations for modules. For each module, a module project engineer is responsible for the layout of the piping systems and for optimising and coordinating input from all disciplines for the design. Since modular design is based on optimisation, space utilization and constructability, operation and maintenance (O&M) review is critically important at an early stage of the design. Input and review by O&M specialists is part of the module design work process. The design of a module is also reviewed several times by a multidisciplinary team, at the preliminary design stage and at the final design. The 3D CADD tools are used to generate drawings for module design

fabrication. Multidiscipline drawings are integrated into a fabrication package using AECL's electronic tools, based on AECL's experience on Qinshan construction packages.

2.4.6.2 Module Fabrication Shops

The preferred location for the module fabrication shop is at either the module fabricator's premises or at a specially designed and built facility. The construction schedule requirement for modules will drive the module assembly operations to ensure the schedule is met. The module fabrication shop could be located on-site or off-site depending on availability of subcontractor facilities, locations and means of access to the plant site.

An area will be developed on site where final preparation of modules is achieved and from where they move under the crane hook for installation.

2.4.6.3 Transportation

The location of the plant is a major consideration in determining both the method of transportation, module size, and location of the facility. If the plant is located on the seacoast there is generally no limitation on the size of modules. However, if the plant is located inland then there will be a size limitation for ground transportation, which may result in final module assembly taking place on site for very large modules.

2.4.6.4 Installation

Site installation of modules into the buildings is carried out by a VHL or large mobile crane depending on respective equipment/module sizes. Two large template areas per unit are provided to prepare RB containment liner assemblies for lifting into the reactor building, as shown in Figure 2.4-1, to facilitate sequential construction of units without them impacting each other. Only one VHL crane is required as it is a tracked / mobile machine and moves around the site as required.

2.5 Human Factors Engineering

The ACR design provides integration of human factors engineering (HFE) principles, standards, requirements, and processes throughout all engineering–system design stages. The primary goal of HFE within the ACR design is to improve the operability and maintainability of plant systems for increased safety of plant personnel, the public, and overall plant production (i.e., decreased outages due to operational and maintenance error).

The ACR human factors engineering program plan (HFEPP) outlines the engineering-system design process and the associated human factors methodology. Application of human factors engineering to the ACR design ensures the following:

a) System/equipment processes of design and acquisition are provided with HFE relevant information:

b) Human–system interface (HSI) design supports the operators awareness of plant/system states and capability to respond appropriately.

c) Allocation of functions/tasks to operators/maintainers is in accordance with human cognitive and physical abilities and requirements.

d) HSIs are designed to minimize the likelihood of operator error and to provide mechanisms, as practicable, for human error accommodation, detection, and recovery.

Integration of human factors into the AECL engineering-system design process ensures the following:

a) A more thorough and consistent approach to system design.

b) Increased design considerations towards operational experience review (OER) information such that designs may be evolved with cognisance of past performance criteria.

c) Establishment of required human factors engineering documentation for system design input.

d) Increased design effort towards definition and assessment of operator/maintainer system interface functionality, information and control needs, environmental issues, and equipment layout for special tool and staff accessibility and maintenance concerns (eg. equipment replacement, removal, etc.).

The overall application of human factors engineering to the ACR design ensures a plant design that supports safe, productive, efficient operating characteristics throughout all stages of plant construction, commissioning, operation, maintenance, testing, inspection, and decommissioning. In following a defence in depth strategy for the ACR design, human factors engineering is a significant design barrier against the occurrence of unplanned events and outages. In addition to the strengthening of design barriers, the ACR offers improved impending event recognition and identification as well as improved event recoverability, utilization of station staff and plant resources, and performance from operational and maintenance personnel.

2.6 Radioactive Waste Management

2.6.1 General

The design of the ACR plant ensures that the volumes and activity levels of the wastes generated in the plant are within the capability of the overall waste management systems and processes. For the ACR-700 design, the origins of the radioactive waste activity can be classified into the following groups:

- Fuel fission products,
- System material activation products, and
- System fluid activation products.

Fuel fission products normally are contained within the fuel sheath and only fission products in defected fuel elements are available for release. The plant systems are designed to filter, trap, or remove released fission products. This leads to a disposal of the majority of the fission products in either spent resin or filter elements as solid wastes.

As a specific feature of the ACR plant, the tritium produced by activation of the heavy water in the moderator heavy water (D_2O) circuits is vented as tritiated heavy water. This is then trapped and retained in the D_2O liquid and vapour collection systems.

Components being serviced will be subjected to decontamination procedures either “in-situ” or in special decontamination facilities for the removal of fission products or activation products. The decontamination facilities are designed to remove as much of the loose and fixed activity as possible from contaminated components before maintenance of those components is done. The cleaning solutions and wash water used for decontamination contain activity. The reactor auxiliary building active drainage system channels these active wastes to the liquid waste management system.

2.6.2 Solid Radioactive Waste Management System

A common solid radioactive waste management system is provided for the two-unit ACR-700 design.

The design includes facilities for all of these materials to be collected in the plant and to be prepared for on-site storage by the utility or for transport off-site. The final disposal methods to be adopted depend on the particular site, regulatory requirements, and policies of the utility.

Solid radioactive wastes are produced throughout the life of the plant during normal operation, maintenance and shutdown. They mainly originate from the reactor building, parts of the reactor auxiliary building (fuel handling and irradiated fuel storage bay areas), and parts of the maintenance building including the waste management areas. The wastes (other than spent fuel), can be assigned to one of the following four classifications:

- Spent resins and charcoal from charcoal filters (from both ordinary and heavy water radioactive circuits).
- Spent filter cartridges (from both ordinary and heavy water radioactive circuits).
- Low activity solid wastes. (These may be classified as combustible and non-combustible, or as compactable and non-compactable.)
- Organic fluids, oils, and chemicals, etc.

In addition, there will be occasional radioactive solid wasted from maintenance of miscellaneous piping and reactor components.

2.6.3 Liquid Radioactive Waste Management System

The liquid radioactive waste management system collects and processes liquid radioactive wastes before discharge to the environment.

The following sources are recognized as producing liquid wastes:

a) Low activity wastes – laboratories and the shower floor drains.

b) Active wastes – laboratories floor drains, the decontamination centre, and the rubber goods laundry.

c) Special sources – RB drains, heavy water areas, resin storage area, spent fuel bay, spent fuel underdrainage ground water sump, and reactor and service building underdrainage ground water sump.

d) Detergent wastes – the main waste originates from showers.

The active drainage systems provide for delivery of low level and active wastes at a sufficient head to flow into the liquid waste tanks.

The liquid radioactive waste management system provides collection, storage, sampling, necessary decontamination, and dispersal of any liquid waste produced by the station. The system is designed to permit control of the release of the radioactivity in the liquid effluent streams to the regulatory limit.

The liquid radioactive waste management system consists of storage tanks. One set of tanks is used primarily for active wastes; one set is used for low activity wastes and one set is used for detergent wastes. Manifolding allows the transfer of the contents of any one tank into any other tank; the contents of any tank can be discharged. The contents of each tank can also be sampled separately.

For decontamination of the effluents, a disposable cartridge filter and a mixed bed ion exchange unit (with auxiliary equipment and pump) are provided to decontaminate the fluid, if necessary, before discharge.

The individual low activity and active tanks are arranged to overflow into the adjacent low activity and active tanks, until all tanks are full, before overflowing to the floor drain system.

A continuous sample system on the common discharge line is provided. A sample is routinely collected, which is analysed to give an average release rate.

2.6.4 Gaseous Radioactive Waste Management System

Potentially active airborne discharges come from the following areas:

- Reactor building,
- Spent fuel storage bay area,
- Decontamination centre,
- D_2O handling area, and
- Active ventilation exhausts.

All active or potentially active gases, vapours or airborne particulates that occur in the plant, are monitored, and filtered if necessary, prior to release to the atmosphere. In particular, active gases that have been vented from the heat transport system, are released to the active ventilation system, only after holdup to permit decay of short half-life isotopes.

The effluent is discharged through a ventilation exhaust stack. Stack effluent monitors are used to ensure that the release limits are not exceeded.

2.7 Operation & Maintenance

2.7.1 Summary

The ACR design has considered methods which will improve outages in order to achieve the capacity factors required for a lower overall energy cost. Through the ACR design process, those constraints in existing CANDU plants are being removed to reduce outage duration from 40-60 days currently in Canada to 21 days every 3 years. A study is underway to optimize the outage activities. Critical path activities have been examined to determine which areas needed improved accessibility such that equipment can be easily and quickly maintained during outages.

Reduction in the number and duration of forced outages has also been examined. This has led to the redesign of unreliable equipment. In addition, the ACR will deliver a plant wide integrated maintenance program complete with tooling, a component bill of materials, up-to-date and easily maintainable configuration management and adequate spares. Through these measures, the outages frequency and duration are predicted to be half the historical values.

With the improvements to capacity factors discussed above, the redesign of plant equipment that has historically been a maintenance burden, and the improved access to design information, it is possible to significantly reduce station staff levels. Key targets for ACR-700 O&M are as follows:

- Frequency of planned outages every 3 years.
- Planned outages to be reduced to 21 days.
- Forced outages to be less than 2%.
- A year-to-year capacity factor of 93 to 95% is achievable.
- Significant reduction in overall staff level.

An incremental design effort at all phases of the project is being undertaken to ensure the targets given above are achieved for the operating station.

2.7.2 Design Improvements for Operational Performance

2.7.2.1 Planned Outage Design Features

To enable short planned outages every 3 years, the ACR-700 design includes the following improvements in maintenance, compared to existing CANDU plant designs:

- The systems are being designed such that no off-power maintenance or testing is required for a minimum of 3 years.
- The application and removal of the reactor shutdown guarantee is simplified such that it can be applied in a single shift.

- Two 100% long term cooling trains (divisions) are provided.
- The use of light water in the heat transport systems reduces the amount of work in plastic suits, thus speeding up operator/maintenance work in the reactor building, and results in reduced dose to workers.
- The elimination of the liquid zone control system from the ACR-700 removes a significant work load from the outage.
- The ACR-700 has fewer fuel channels and feeders to inspect. The normal practice for a comprehensive fuel channel inspection program is a 10% sample over 10 years.
- The ACR-700 has two steam generators vs. four in CANDU 6 to inspect, which is a significant saving in both required inspection equipment and manpower to open, close, and set up.
- The use of flow assisted corrosion (FAC) resistant feeder piping reduces feeder thinning concerns and hence inspections. Additionally, insulating panels are designed for quick access.
- The ACR-700 design has a service elevator for tool carts and equipment situated next to the main airlock.
- The ventilation is sized to allow airlock doors to be open during an outage. The airlock frame design accommodates a single aluminium conventional door, thus allowing a much faster movement of personnel without risk of airborne contamination flowing out of the reactor building.
- Hoists and cranes are provided for critical path maintenance. A maintenance specialist reviews all systems during layout.
- Normal shutdown maintenance provisions, such as temporary electrical, water, and air supplies are built in. Piping analyses of the HTS include provisions for lead blankets and removal of valves from lines, while retaining seismic capability.
- Insulation on the secondary side is removable to allow FAC inspections.
- Dedicated lay down areas for parts staging are provided.
- Office areas for outage management are provided.

2.7.2.2 Forced Outage Improvement

Equally important to the station's lifetime capacity factor is the number and duration of unplanned, or forced, outages. Many of the design improvements listed in Section 2.7.2.1 are equally applicable in reducing the duration of a forced outage. However, elimination of forced outages altogether is the design target. Hence the following features are inherent in the ACR-700 design:

- A reliability centred maintenance (RCM) approach is used throughout the design. By identifying critical components early in the design, the highest quality equipment can be

provided. With a clear understanding of failure modes that must be avoided, the sub-components of the equipment can be evaluated for reliability.

- Accessibility is provided in the design for critical components to allow easy routine maintenance.
- An overview plan will be provided to the utility.
- A recommended major spares list will be provided to the utility.
- The necessary infrastructure is provided for condition based maintenance (vibration, oil, AOV, MOV, thermography, etc.).
- Adequate inspection provisions are provided for major equipment (e.g., diesel generators, major heat exchangers, etc.) to facilitate comprehensive inspection.
- Provisions are made for an engineering analysis/trending surveillance system.

With these features the ACR-700 design will be able to meet, with confidence, a 93% year-to-year capacity factor target. A utility with superior leadership can further improve the performance since there are no inherent technical limitations in achieving higher capacity factors. It has been determined that the upper limit provided by maintenance constraints is an outage every four years to refurbish equipment.

2.7.3 O&M Cost Improvements

The most significant way to cut operating costs is through the reduction of staff needed to run the plant. It is apparent that a unit with short planned outages and limited forced outages will require less staff and overtime costs than an unpredictable unit. Hence the focus of ACR-700 has predominantly been in that direction. In addition to the features noted above, two additional design initiatives have also been taken.

1. An electronic equipment data system is provided, which can be easily loaded in the utility work management system. This contains all aspects of design information for each piece of equipment in the plant. Vendor information can also be added to the same database. This reduces engineering, supply, and maintenance effort to perform day-to-day functions.
2. Design requirements are itemized, measurable, and contain both normal and minimum acceptable performance, with clear reference to supporting rationale. The design description documents will address how each requirement is met. This will reduce station engineering assessments of equipment operability when faced with degraded performance.

The above two innovations will contribute significantly to maintain configuration management during the operating life of the plant. As these processes are developed during the design phase, it will be possible to reap the rewards, which will include:

- Standardization of most components to two suppliers, thus reducing inventory, training and installation time.

- All equipment which is part of the preventative maintenance program will be fully accessible and provided with the necessary lifting devices.
- Major spares are identified, allowing replacement and refurbishment in station machine shops.
- Elimination of major maintenance problems identified in current CANDU plants.

2.8 Radiation Protection & Zoning

2.8.1 Radiation Protection

The ACR-700 plant is designed to ensure that plant staff and members of the public are provided with adequate protection from radiation throughout the operating life and into the de-commissioning phase. The radiation protection provisions ensure safety for all normal, abnormal, and accident conditions. The plant is designed to comply with the recommendations of the International Commission on Radiological Protection (ICRP) as set out in ICRP-60. The radiation protection provisions on the plant are designed to reduce the exposure to an individual below the annual limits set out in ICRP-60.

The principles used in developing the radiation protection features are based largely on previous CANDU plants. The emphasis is on taking advantage of advances in the CANDU technology that lead to lower exposures, and also to introduce design changes that reduce the hazard arising from the largest contributors to station exposures. The ACR-700 incorporates a system of contamination control by classifying all areas of the plant into one of the contamination control zones (see Figure 2.8-1).

The layout of the ACR-700 groups the principal radioactive systems inside the reactor building. As a result, personnel access to the radioactive systems can be readily controlled. Access controls inside containment employ interlocks and locked doors to prevent unauthorized access to areas where external radiation fields are high during reactor operation or irradiated fuel transfer.

The moderator system equipment and the moderator auxiliary system equipment are located on the ‘B’ side of the reactor building. With this arrangement the moderator equipment that has a tritium hazard is installed in rooms or vaults that are atmospherically separated from other areas of the reactor building. The air in the rooms and vaults with a tritium hazard is circulated continuously through vapour recovery driers to recover any heavy water vapour escaping from trace leaks from the moderator equipment. A system of radiation monitors complements the zoning system to control and reduce the spread of surface contamination.

The limitation of external and internal radiation exposure to persons at the site boundary and to plant personnel is accomplished by a combination of facilities incorporated into the plant design and by adherence to a set of approved operating procedures and regulations. In general, the measures employed follow the principles used at previous CANDU plants.

The exposure of plant personnel to radiation is limited by control of access to areas of high activity or of possible contamination, and by plant layout and structural shielding arrangements. In addition, protective clothing, air masks, and decontamination facilities are available for use when required. Personnel monitoring and dosimetry facilities are provided.

Exposure to the public is limited by exclusion of all unauthorized persons from the plant area and by preventing any habitation within the exclusion boundary. The release of all effluents, liquid

and gaseous, which might conceivably carry significant radioactivity is monitored and controlled as described in Chapter 11. Active solids are stored in a manner that prevents the release of activity.

The as low as reasonably achievable (ALARA) principle is applied through the design stage to ensure radiation exposures are as low as reasonably achievable, economic and social factors being taken into account (see Chapter 12).

2.8.2 Zoning

The various buildings in the plant are laid out in a manner that assists in the necessary segregation of radioactivity and other hazards from plant personnel and from the population. The features described below form part of the plant arrangements for this purpose.

Contamination control has the primary purpose to protect personnel and the general public from the hazards associated with station production, and/or use of radioactive material. To prevent contamination spread, personnel traffic is controlled, and appropriate radiation detection instruments and monitors are used to ensure adequate radiation control. The plant layout is divided into zones according to the potential contamination in each. The zones are defined as follows:

- Zone 1
  This zone contains no radioactive equipment and is free from contamination. No form of radioactivity is allowed to enter this zone. Typically, this includes the service building and turbine building. Eating is permitted in this zone.
- Zone 2
  This zone is normally free of contamination and radioactive equipment. However, maintenance or the movement of radioactive material from Zone 3 can temporarily create contamination, which is then cleaned up as soon as discovered, or suitably controlled.
- Zone 3
  This zone contains the principal sources of contamination, radioactive material, and equipment. Contamination may sometimes be present, i.e., it should be expected. Sources of contamination are localized and kept under control. This includes the reactor building, parts of the reactor auxiliary building (fuel handling and irradiated fuel storage bay areas), and parts of the maintenance building.

Physical barriers such as railings and procedural controls are provided to direct the movement of traffic between zones. To assist in traffic control, a number of contamination monitor locations are provided at the boundaries between Zones 1 and 2, and zones 2 and 3, with the exception of movement from Zone 1 to out-of-doors. Persons leaving a zone to enter one with a lower number designation are required to use the monitors. A doorway monitor automatically monitors all persons before leaving the plant. Radioactivity above the permissible limit is alarmed. Emergency exits to the outdoors are provided at the grade level elevation at convenient locations near stairwells and traffic routes.

Regulation of personnel entry to the exclusion zone is set forth in the plant procedures and is generally restricted to qualified personnel and to those under escort by them. Wherever possible, use is made of permanent signs and procedures to warn and instruct personnel of any possible danger from radiation. However, there are "Access Controlled Areas" where the radiation hazard is such that entrance must be made only with the knowledge and consent of the control room staff, and by using a special key.

The access control system is employed to guard against approach by personnel to high radiation areas. The access control system is based on the use of locks and interlocks on the doors to the access controlled areas and adhering to strict operational procedures. Access to the keys for these locks is under the direct control of the station supervisor. The keys are retained in and issued from a special keyboard(s) in the control room. All personnel access doors are equipped with devices to permit escape, irrespective of the status of access locks. Emergency exits to the outdoors are provided at the grade level at convenient locations near stairwells and traffic routes.

2.8.3 Building Zones

The following building zones are used for the ACR-700 plant layout;

Zone 1: The service building and turbine building.

Zone 2: The crane hall, main control building, non-active areas of the maintenance building, and the reactor auxiliary building process/electrical areas.

Zone 3: The complete reactor building, equipment marshalling area, long-term cooling enclosures, the main and auxiliary airlocks in the reactor auxiliary building, and the active areas of the maintenance building.

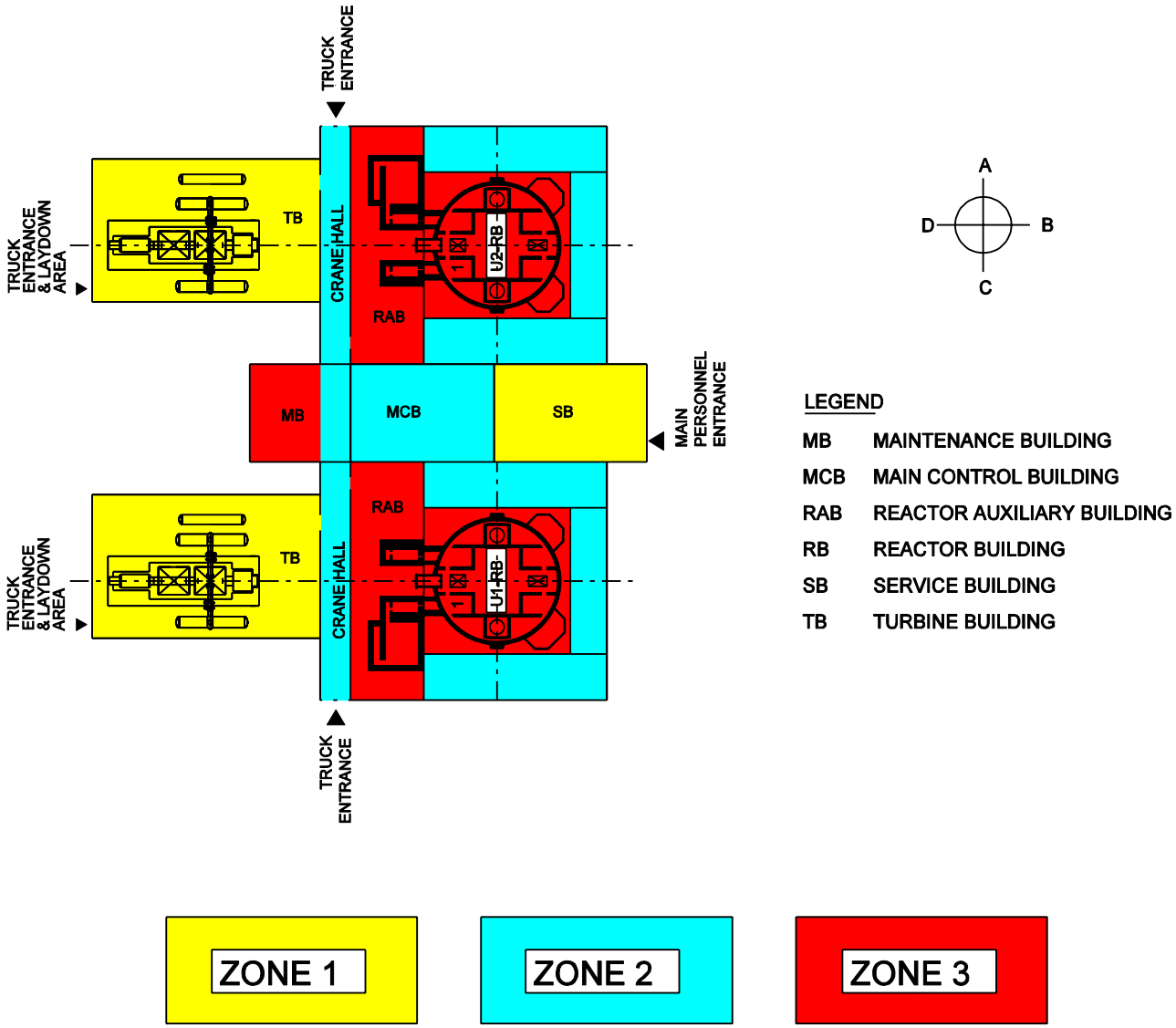

Figure 2.8-1 ACR-700 Building Zones

2.9 References

2-1 IAEA, INFCIRC/164, Agreement Between The Government Of Canada And The International Atomic Energy Agency For The Application Of Safeguards In Connection With The Treaty On The Non-Proliferation Of Nuclear Weapons.

2-2 IAEA, INFCIRC/164/Add. 1, Protocol Additional To The Agreement Between The Government Of Canada And The International Atomic Energy Agency For The Application Of Safeguards In Connection With The Treaty On The Non-Proliferation Of Nuclear Weapons.

2-3 CNSC (formerly AECB) Regulation - Nuclear Safety and Control Act, Nuclear Security Regulations.

2-4 CNSC (formerly AECB) Regulatory Guide G-274, "Security Programs for Category I or II Nuclear Material or Certain Nuclear Facilities".

2-5 IAEA Safety Series Standard No. NS-R-1.

2-6 CAN/CSA-N285.0, "General Requirements for Pressure-Retaining Systems and Components in CANDU Nuclear Power Plants."

2-7 CAN3-N289.1, "General Requirements for Seismic Qualification of CANDU Nuclear Power Plants."

2-8 CAN/CSA-N293, "Fire Protection for CANDU Nuclear Power Plants."

2-9 CNSC (formerly AECB) Consultative Document C-6, "Requirements for the Safety Analysis of CANDU Nuclear Power Plants", Rev. 1.

2-10 CNSC (formerly AECB) Companion Document to Consultative Document C-6.

2-11 CNSC (formerly AECB) Regulatory Document R-7, "Requirements for Containment Systems for CANDU Nuclear Power Plants."

2-12 AECL Overall Quality Assurance Manual, 00-01913-QAM-010.

TABLE OF CONTENTS

SECTION **PAGE**

3. BUILDINGS AND STRUCTURES 3-1

3.1 Reactor Building 3-1
3.1.1 General 3-1
3.1.2 Design Bases 3-2
3.1.2.1 Containment Structure 3-2
3.1.2.2 Internal Structure 3-4
3.1.3 Description 3-4
3.1.3.1 Containment Structure 3-4
3.1.3.2 Internal Structure 3-5
3.1.3.3 Airlocks 3-17
3.1.3.4 Shielding Doors 3-17
3.1.3.5 Linings and Finishes 3-17
3.1.3.6 Access Control 3-17
3.1.3.7 Maintenance 3-17
3.2 Reactor Auxiliary Building 3-18
3.2.1 Design Bases 3-18
3.2.1.1 Functional Requirements 3-18
3.2.2 Description 3-21
3.2.2.1 Main Steam and Feedwater Lines Support Structures 3-22
3.3 Turbine Building 3-25
3.3.1 Design Bases 3-25
3.3.2 Description 3-26
3.4 Main Control Building 3-30
3.4.1 Design Bases 3-30
3.4.2 Description 3-30
3.5 Service Building 3-32
3.5.1 Design Bases 3-32
3.5.2 Description 3-32
3.6 Maintenance Building 3-33
3.6.1 Design Bases 3-33
3.6.2 Description 3-33
3.7 Cooling Water Structures 3-35
3.7.1 Condenser Cooling Water Pumphouse 3-35
3.7.2 Raw Service Water Pumphouse 3-35
3.8 Diesel Generator Buildings 3-36
3.8.1 NSP Diesel Generator Building 3-36
3.8.2 BOP Diesel Generator Building 3-36
3.9 Auxiliary Buildings and Structures 3-37

3. BUILDINGS AND STRUCTURES

The conceptual layout arrangement of the ACR-700, which includes the nuclear steam plant (NSP), nuclear steam plant services (NSPS) and balance of plant (BOP), is designed as a two-unit, self-sufficient plant containing all the facilities required for day-to-day operations. The plant is an integrated design using the same power block for each of the units. The main structures of each unit define the repetitive power blocks of the two-unit plant. A basic power block consists of the reactor building (RB), the reactor auxiliary building (RAB), and the turbine building (TB).

An area between the two units is dedicated to common services and facilities to support the operation of the plant. The individual units of the two-unit plant share control, maintenance, administration, service areas and some common process systems. The buildings composing the shared area are the maintenance building (MB), main control building (MCB), and service building (SB).

A typical two-unit plant layout of the main structures is shown in Figure 2.3-1.

In order to control the spread of contamination through the buildings, they are divided into contamination control zones.

It is noted that the relationship between site grade elevation of 106.00 m is based on elevation 100.0 m (reactor building main operating floor).

3.1 Reactor Building

3.1.1 General

The reactor building houses the reactor, the reactor refuelling systems, the heat transport system including the steam generators, and the moderator system, together with their associated auxiliary and special safety systems. The reactor building is divided into two major structural components. These are:

- the steel lined prestressed concrete containment structure
- the internal reinforced concrete structure.

Both containment structure and internal structures are supported on a common base slab. They are designed to withstand a design basis earthquake (DBE) and the site environmental requirements. The building is seismically qualified for a DBE of 0.3 g peak ground acceleration at rock or firm strata level and a wide range of soil/rock foundation conditions.

The containment structure perimeter wall is separate from the internal structure. This provides flexibility during construction and eliminates structural interdependence between the cylindrical containment wall and the internal structures.

The reactor building plans and structures are shown in Figures 3.1-1 to 3.1-11.

3.1.2 Design Bases

3.1.2.1 Containment Structure

The design bases of the containment structure are as follows:

- The containment structure houses the nuclear steam supply system components such as the reactor, heat transport system, other process system and safety systems. The containment structure protects the nuclear steam supply system and its associated systems and components against external hazards (i.e. earthquakes, floods, tornado, etc.).
- Consideration of the requirements for standardization of the structural elements and components of the plant.
- Provision of a layout and support facilities that facilitate access in and out of the building for installation, inspection, maintenance and replacement of all major equipment located in the reactor building.
- Facilitates the recovery of water including heavy water in case of a spill inside the building.
- Mitigation of the release of radioactivity to the environment during normal operation, and during and after an accident event.
- Provision of a sufficient margin of safety with respect to the strength of the containment structure, including access openings and penetrations and isolation valves. These margins of safety apply to the potential internal pressures, negative pressures, temperatures, dynamic effects such as missile impacts, and reaction forces anticipated to arise as a result of design basis accidents. The effects of other potential energy sources, including, for example, possible chemical and radiolytic reactions, have also been considered. In calculating the necessary strength of the containment structure, natural phenomena and human induced events were be taken into consideration, and provision has been made to monitor the condition of the containment and its associated features.
- Provision of assurance that no damage to the containment structure will occur during design basis events.
- Assurance that the prescribed maximum leakage rate is not exceeded for any design basis accidents that release radioactive materials within the containment boundary.
- Design of the containment structure affecting the leak tightness of the system has been designed so that the leak rate can be achieved at the design accident pressure after all penetrations have been installed. Determination of the leakage rate of the containment system at periodic intervals over the service lifetime of the reactor is possible at reduced pressures that permit estimation of the leakage rate at the containment design pressure.
- Assurance of compliance with the maximum allowable leakage rate from the containment envelope. This is the value used in the safety analyses, which demonstrate that the reference dose limits are not exceeded, with appropriate allowance for uncertainties.

- Sufficient provision for radiation shielding to ensure that radiation fields are not excessive in areas of the plant that must remain habitable.
- Assurance that the containment structure is designed to retain its pressure boundary and structural integrity during and following an earthquake. The containment structure is qualified to the DBE Seismic Category 'A' level.
- Maintenance of containment boundary during and after fires that could cause release of fission products from the reactor. The perimeter wall and penetrations are designed such that fires that could occur on either side of the wall will not propagate to the other side.
- The area inside the reactor building is considered as one single fire compartment for the purpose of design.
- The space inside the reactor building is divided into a number of fire zones for identification of fire origin. These zones are not necessarily separated by fire barriers. However, local fire barriers are provided for the following cases:
- Provision of two routes for exit from and entry to the containment structure during a fire.
- The containment structure is designed to withstand the design accident pressure without any structural impairment.
- Assurance of maintaining structural integrity during the construction, testing, normal operation and environmental events, loss of coolant accident (LOCA), and main steam line break (MSLB) event.
- Design meets the requirements of the applicable codes.
- Meet the functional and performance requirements under the internal environmental conditions that may occur within the containment structure during normal, abnormal and postulated accident conditions combined with the external environmental conditions that are specified for the site.
- Ensure that flooding from external sources will not cause functional impairment of the containment system or any safety related system within the containment structure. Internal flooding due to the failure of any process system containing fluids has been taken into consideration.
- Protection against internal missiles that could arise from failure of primary heat transport system components, have been provided, where necessary. Missile impact effects on the structural component (target) including the overall response and the local effects are considered. The design of the containment structure satisfies the following:
    - Ensure that dynamic effects of a postulated pipe rupture in the heat transport, main steam, and feedwater systems do not cause consequential damage to the containment envelope, the containment heat removal and their supporting systems to the extent that containment pressure could not be maintained below the design value. In this respect, containment leak tightness is maintained within the limit credited for accident analysis, and radioactive releases are limited to prevent exceeding regulatory dose criteria. Where

necessary, pipe whip restraint and jet deflector are provided to protect essential structures, systems and components from the dynamic effects of pipe rupture.

- Resist the tornado conditions including tornado missiles. The resulting design is such that: the containment structure and the safety related structures within the containment structure remain functional so that a safe shutdown of the facility can be accomplished without danger to operating personnel or to the surrounding environment; no rupture of heat transport system occurs; and there is no release of radioactivity in excess of regulatory limits.

3.1.2.2 Internal Structure

The design bases of the internal structure are as follows:

- Provide support to the reactor process systems, equipment, pipes and cables within the reactor building and is a safety related structure.
- Provide shielding against radiation to the operating personnel under normal operating condition.
- Layout is designed to make possible, access in and out of the building for installation, inspection, maintenance and replacement of all major equipment that is required to be replaced.
- The reactor building internal structures is constructed of a non-combustible material. When the use of combustible materials cannot be avoided, efforts were made to reduce the combustibility by reducing the proportion of combustibles, by using fire retardant additives or by providing fire resistant coatings.
- Internal structures are designed for a service life of 60 years.
- Designed for the effects of the most severe seismic events (DBE), for the effects of a LOCA and of a MSLB event. The effects of accident pressure, accident temperature and pipe rupture including pipe reactions; impact and jet impingement have been included.
- Retain its structural integrity for all the above design basis events; to enable safety and safety related components to continue functioning as required.

3.1.3 Description

3.1.3.1 Containment Structure

The containment structure consists of a steel lined, prestressed cylindrical wall with a hemispherical dome and a flat base slab. It houses, protects and supports various structures including the primary nuclear steam supply system components and is a part of the containment system. It has the basic function of limiting the release of radioactive material to the environment during normal operation and during and after accident conditions.

The prestressing cables are located in ducts or holes in the concrete, which are filled with grease after tensioning.

To achieve acceptable leakage control the containment structure has an internal metal lining applied to the inner surfaces of the prestressed concrete dome and walls. All penetrations through the containment envelope are designed minimize any leakage through the penetrations.

3.1.3.2 Internal Structure

The internal structure supports reactor process systems and is therefore a major nuclear support structure. The internal structure as a whole is structurally independent of the perimeter wall and is only connected to the containment structure through the base slab on which it is founded.

The major internal structures are reinforced concrete and include the reactor vault walls, the fuelling machine vault walls, the steam generator enclosure walls, the heat transport pump support walls, the reactivity mechanism floor, and intermediate floors. These walls and floors are designed to support all imposed loads and arranged to integrate process equipment spaces with shielding. Minor internal structures include steel floors and steel frames providing equipment support, crane runway support, pipe restraints, walkways, and stairs. The layout of the internal concrete structure walls, floors, active equipment, and components is arranged to minimize personnel exposure to radiation while maximizing access for testing and maintenance of components, and to minimize construction costs and schedule.

The internal structure divides the reactor building into two areas as follows:

- An area called “the accessible area” to which operating and maintenance personnel have an access during normal plant operation. A large portion of the reactor building is accessible while the reactor is operating, facilitating on–power maintenance, inspection and testing. All the systems and items of equipment to which access is routinely required for operation, servicing or maintenance, are housed in rooms within the accessible area. All of the accessible rooms and areas are contained within a reinforced concrete structure, which forms a boundary between the inaccessible and accessible areas. The walls and slabs of this boundary structure are designed for transient accident pressures as well as for other structural loads, and are also designed to provide necessary shielding from radiation sources adjacent to operating areas.
- An area called “the inaccessible area” which is not accessible during plant operation, but to which access can be obtained after plant shutdown. Outside of the accessible area, the remainder of the reactor building forms the inaccessible area containing the reactor and its vault, the heat transport and moderator systems, the fuelling machine operating areas, and the areas for auxiliaries. Service cranes are provided as required in this area. The steam generator room is designed for limited access during operation.

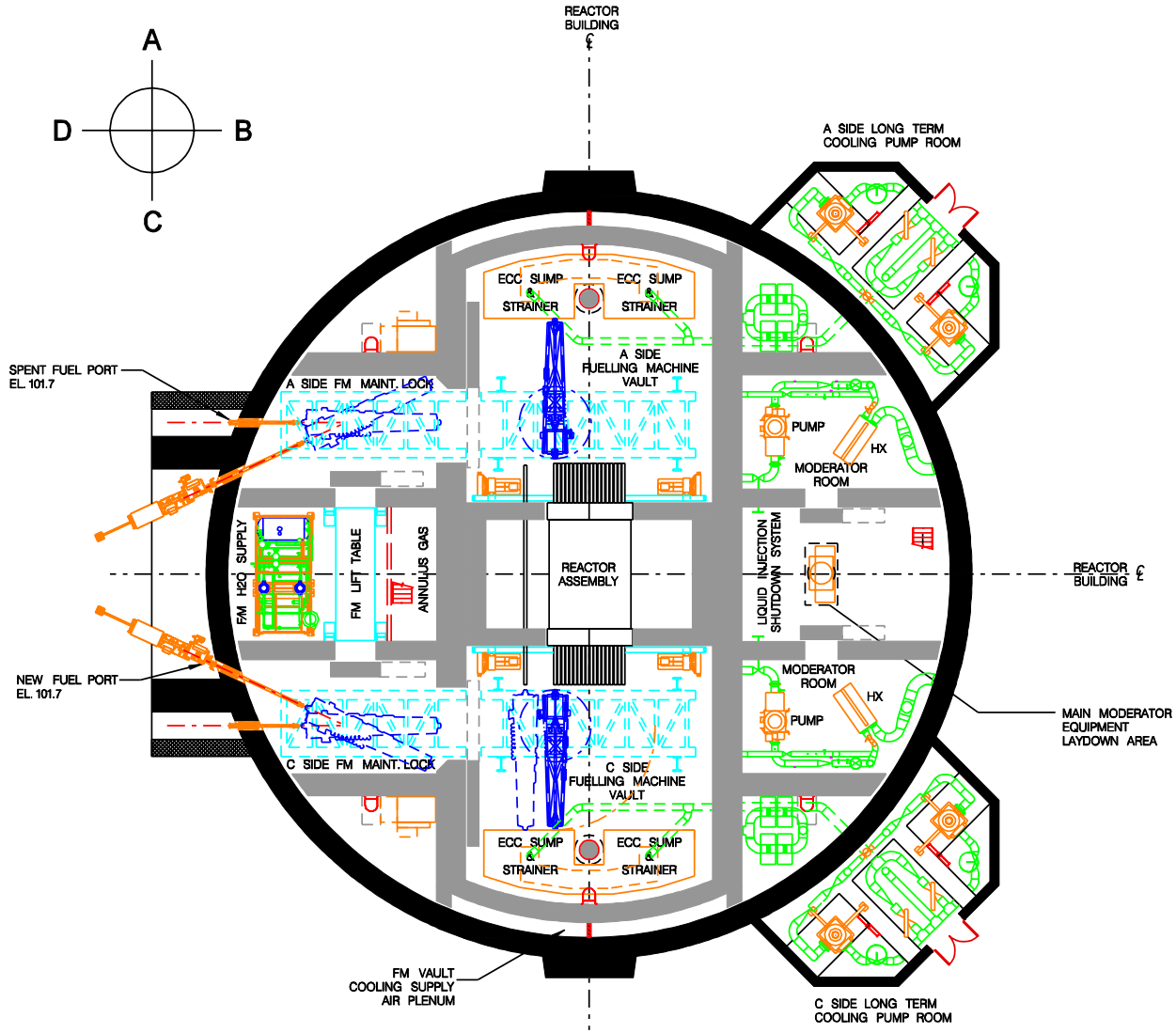

Figure 3.1-1 ACR-700 Reactor Building - Plan @ Elevation 100

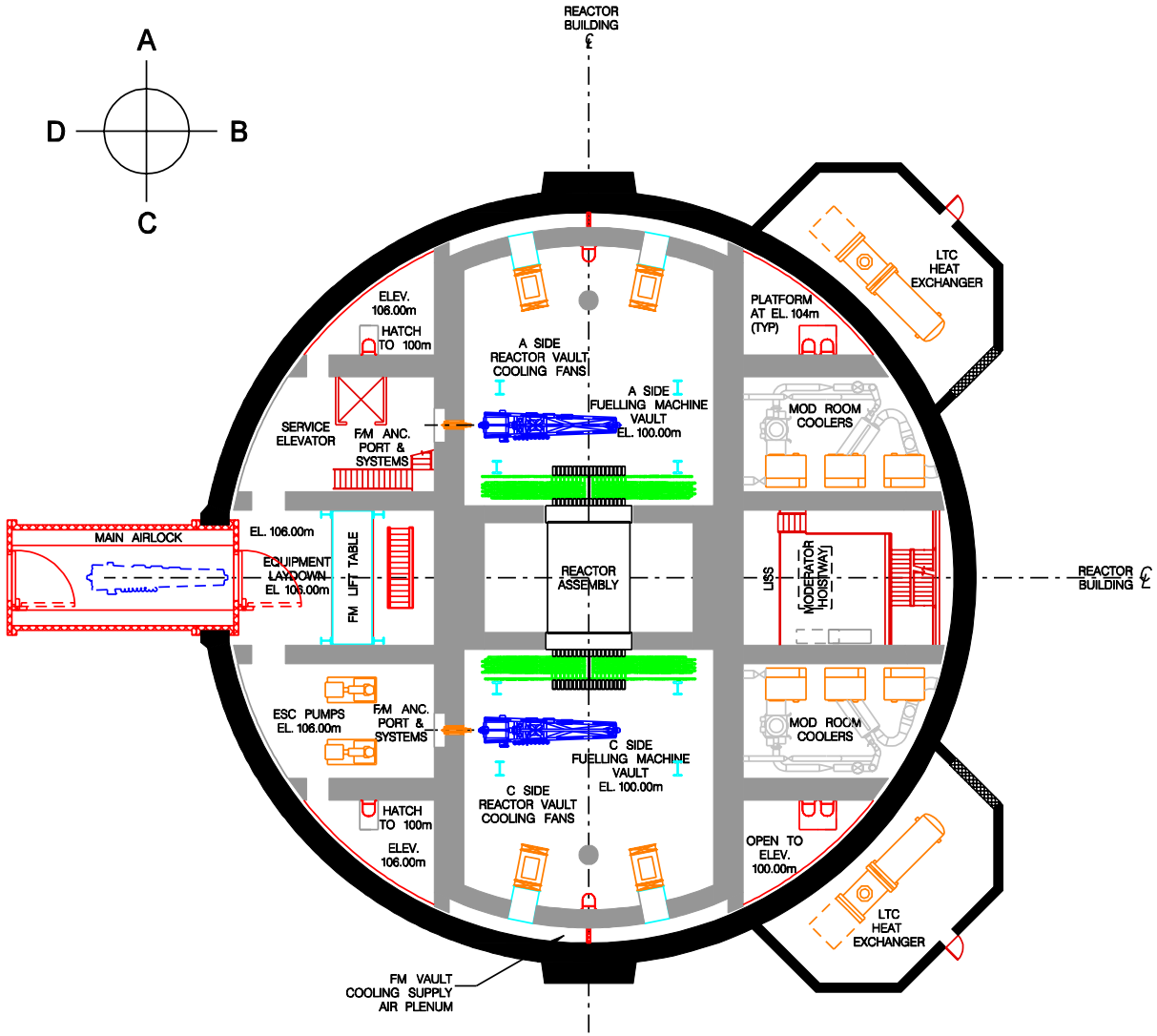

Figure 3.1-2 ACR-700 Reactor Building - Plan @ Elevation 106

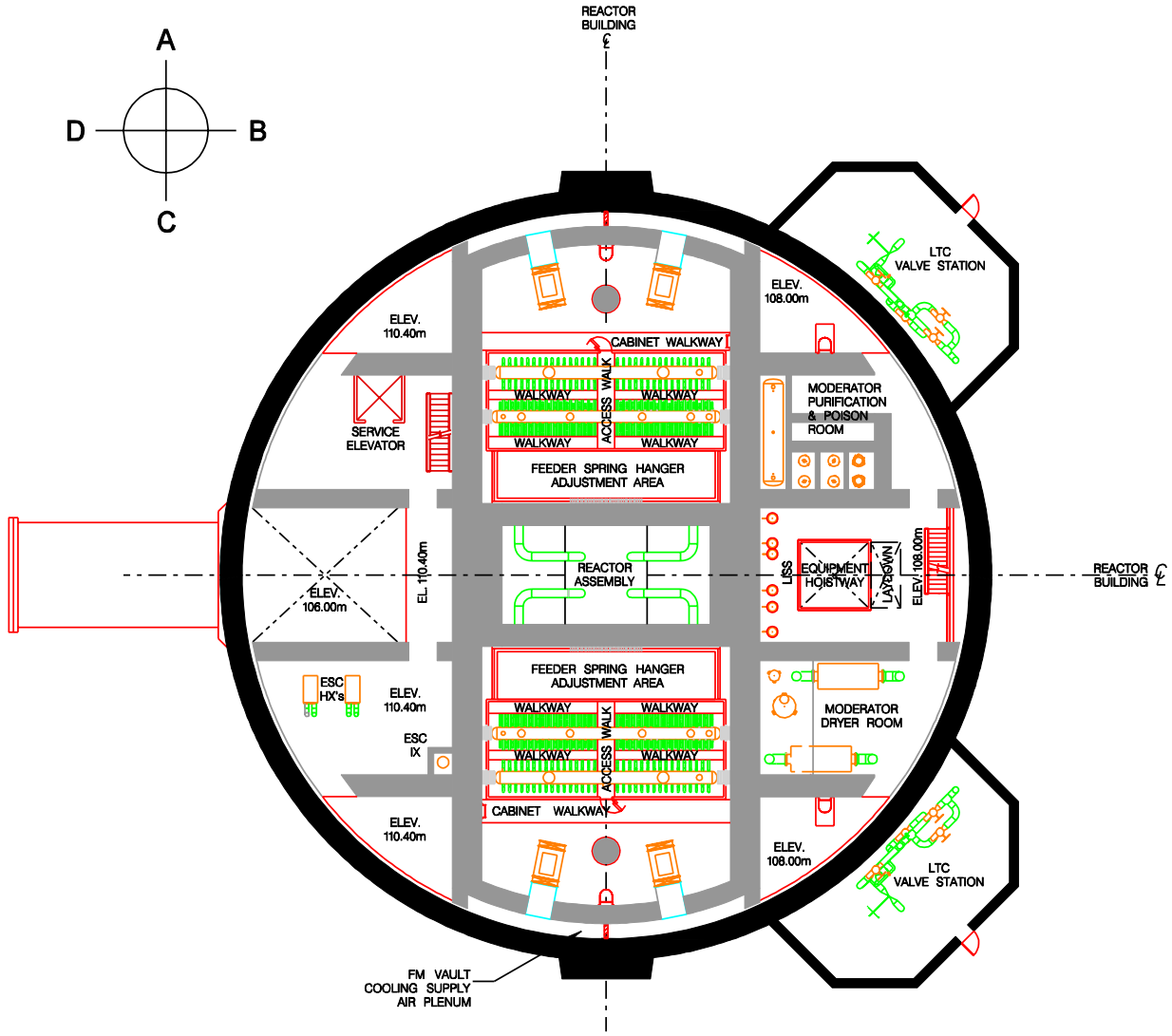

Figure 3.1-3 ACR-700 Reactor Building - Plan @ Elevation 110

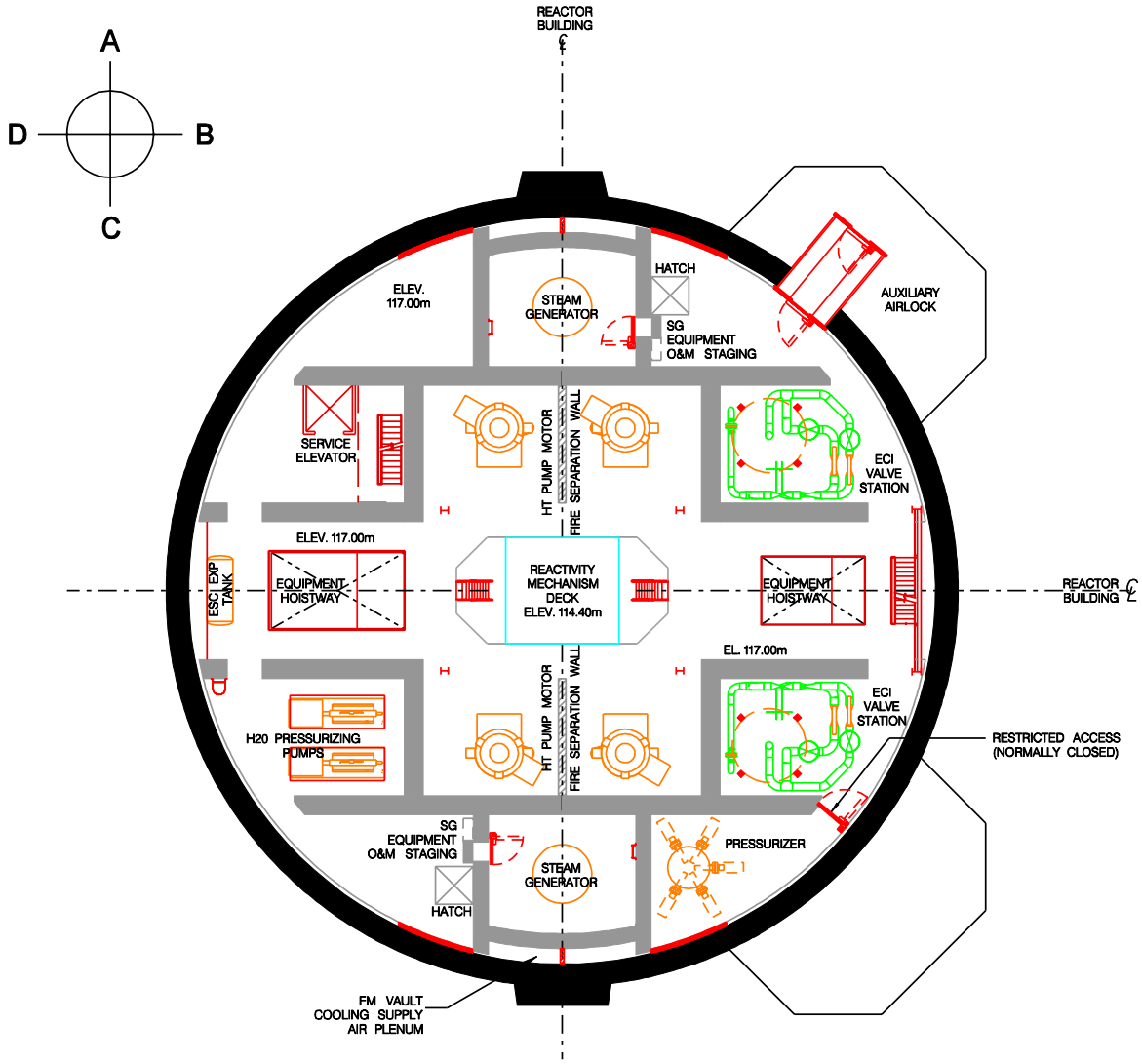

Figure 3.1-4 ACR-700 Reactor Building - Plan @ Elevation 117

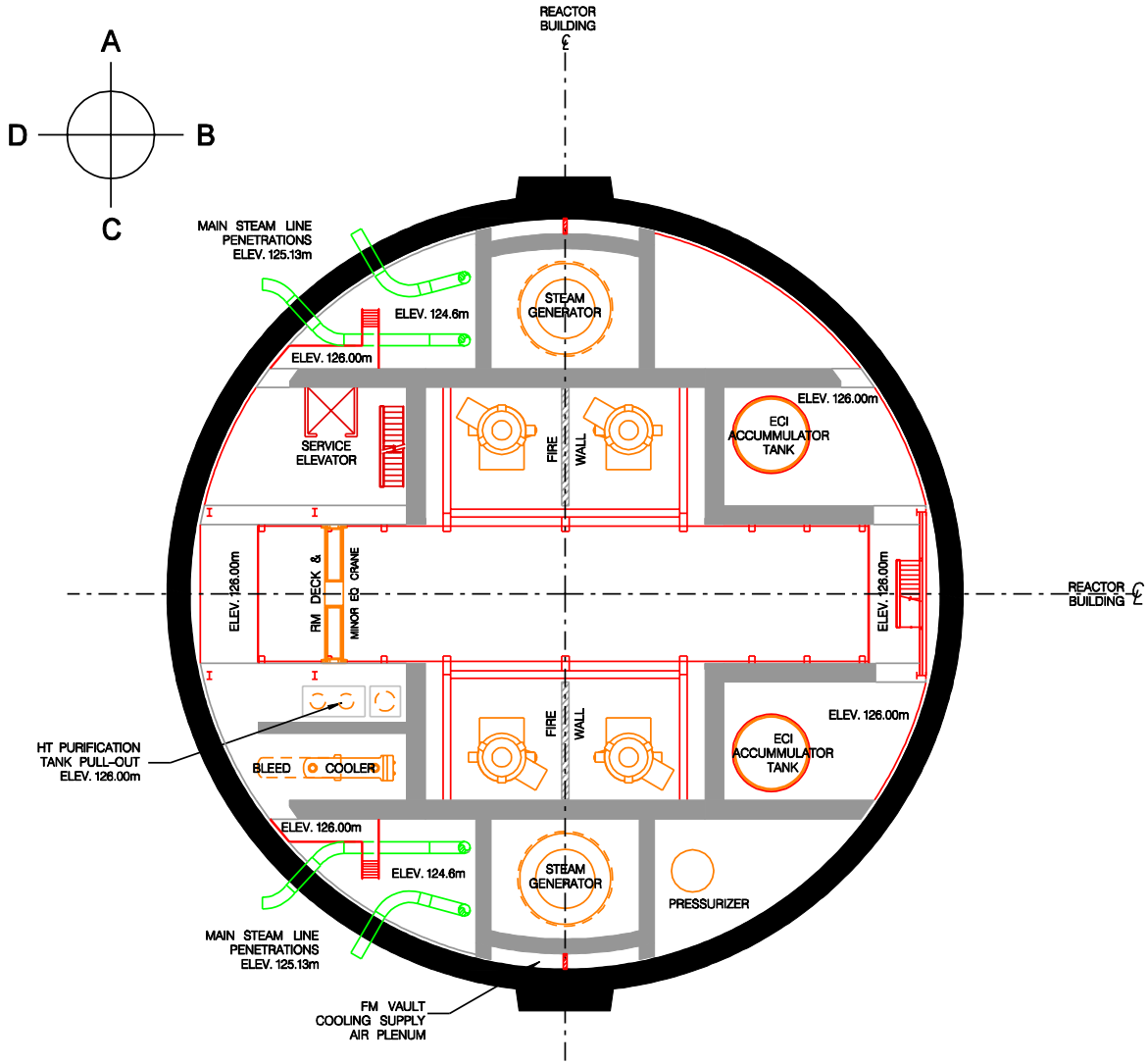

Figure 3.1-5 ACR-700 Reactor Building - Plan @ Elevation 126

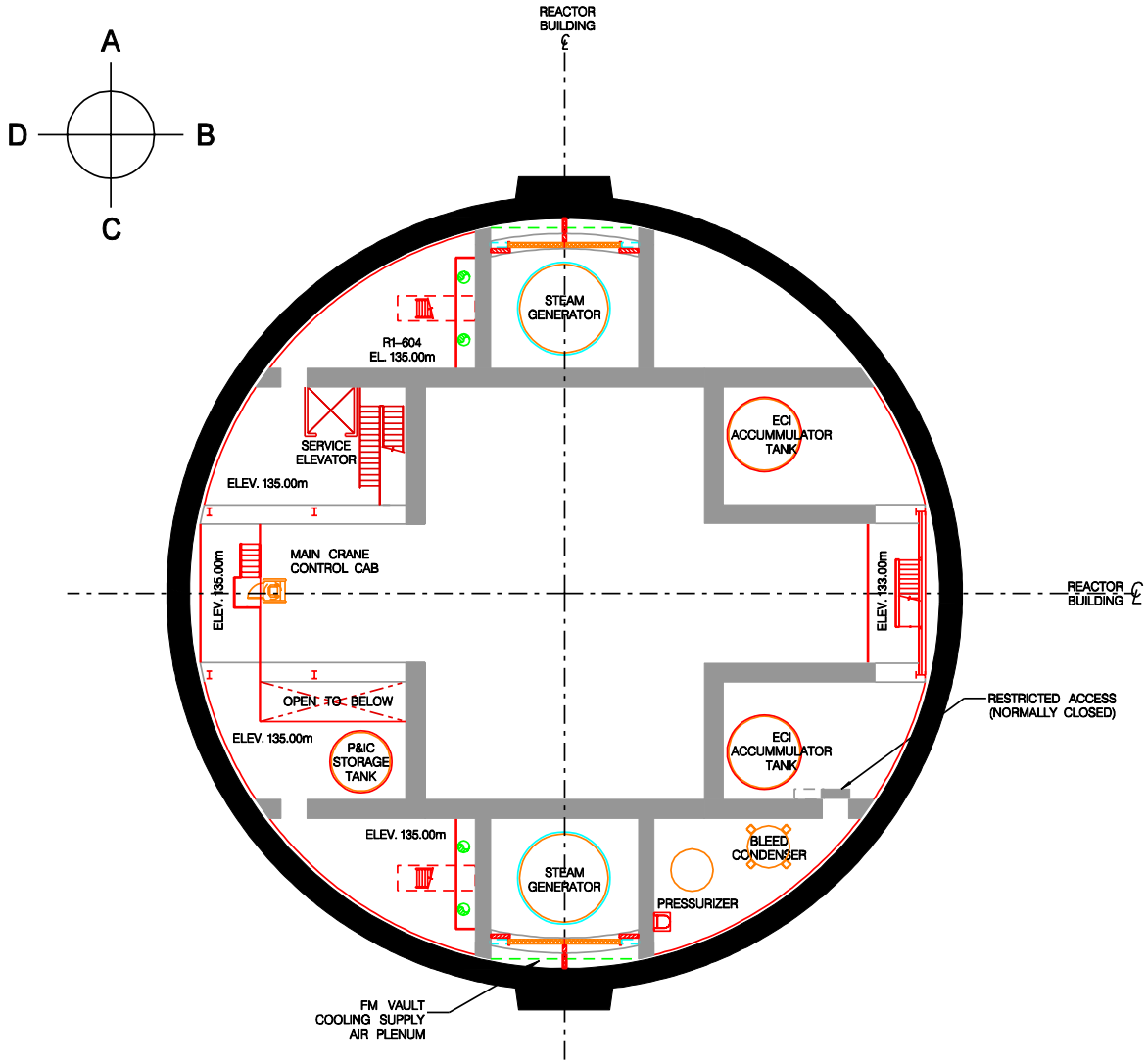

Figure 3.1-6 ACR-700 Reactor Building - Plan @ Elevation 133

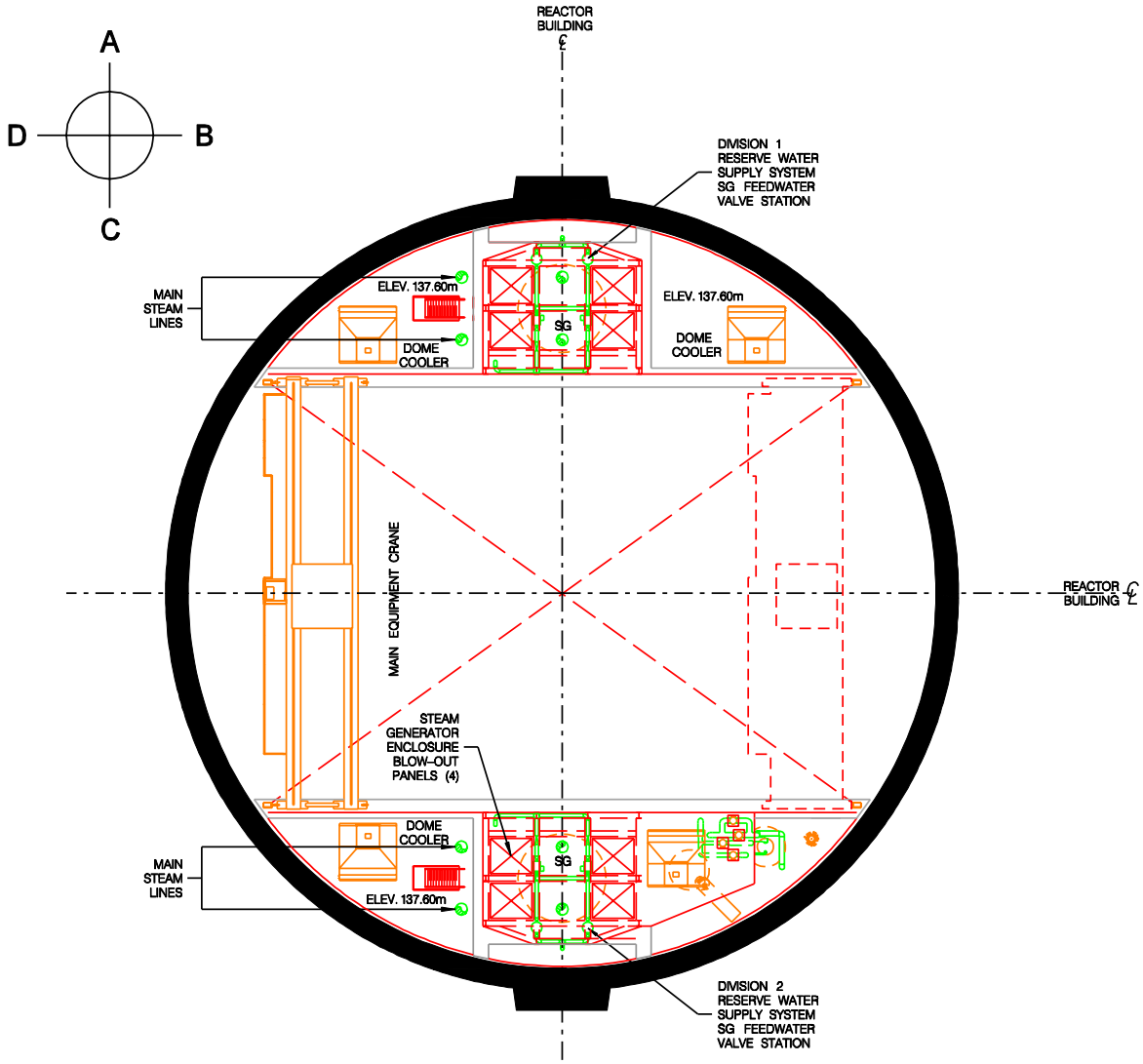

Figure 3.1-7 ACR-700 Reactor Building - Plan @ Elevation 137.6

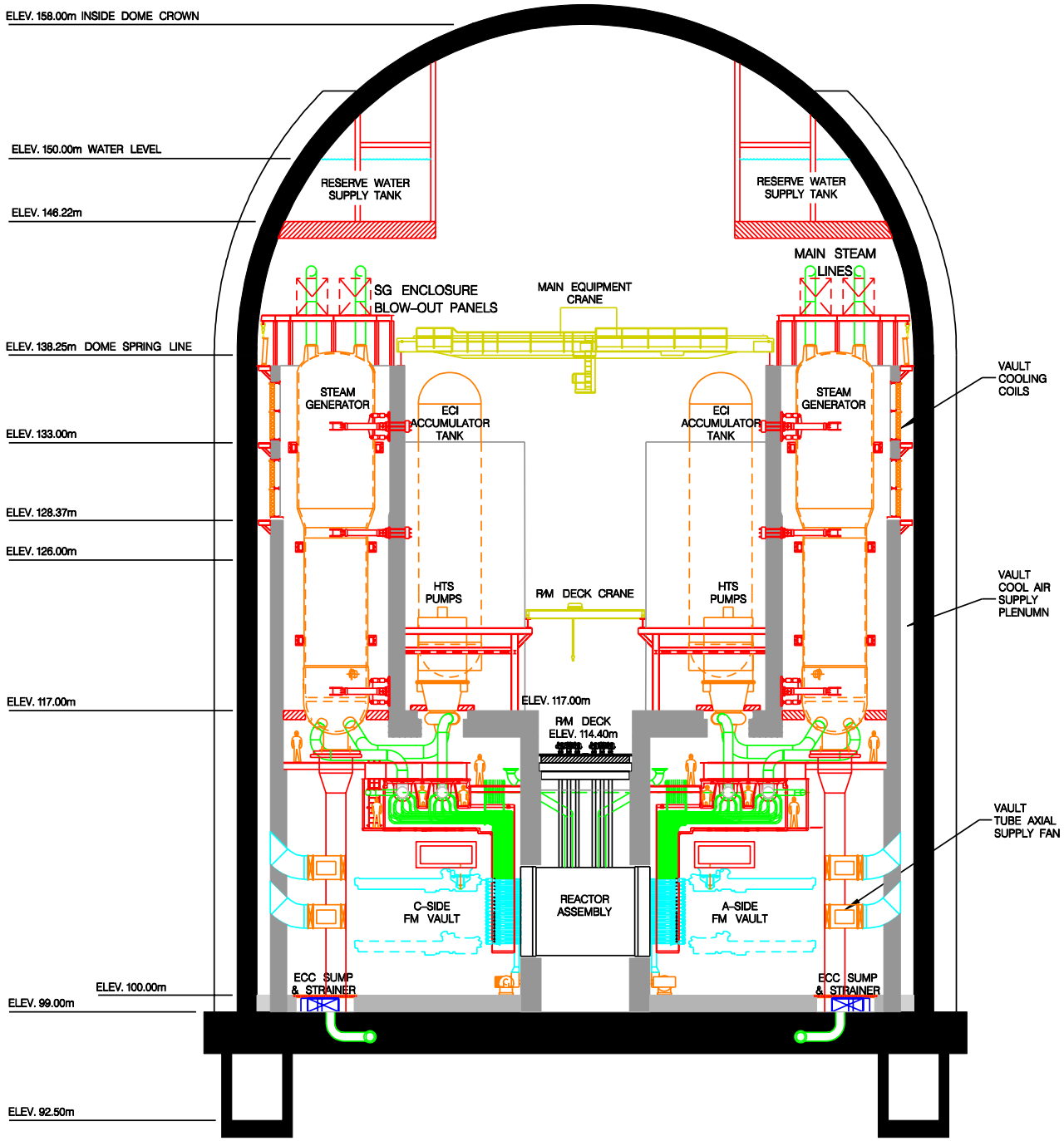

Figure 3.1-8 ACR-700 Reactor Building - A-C Axis Cross Section

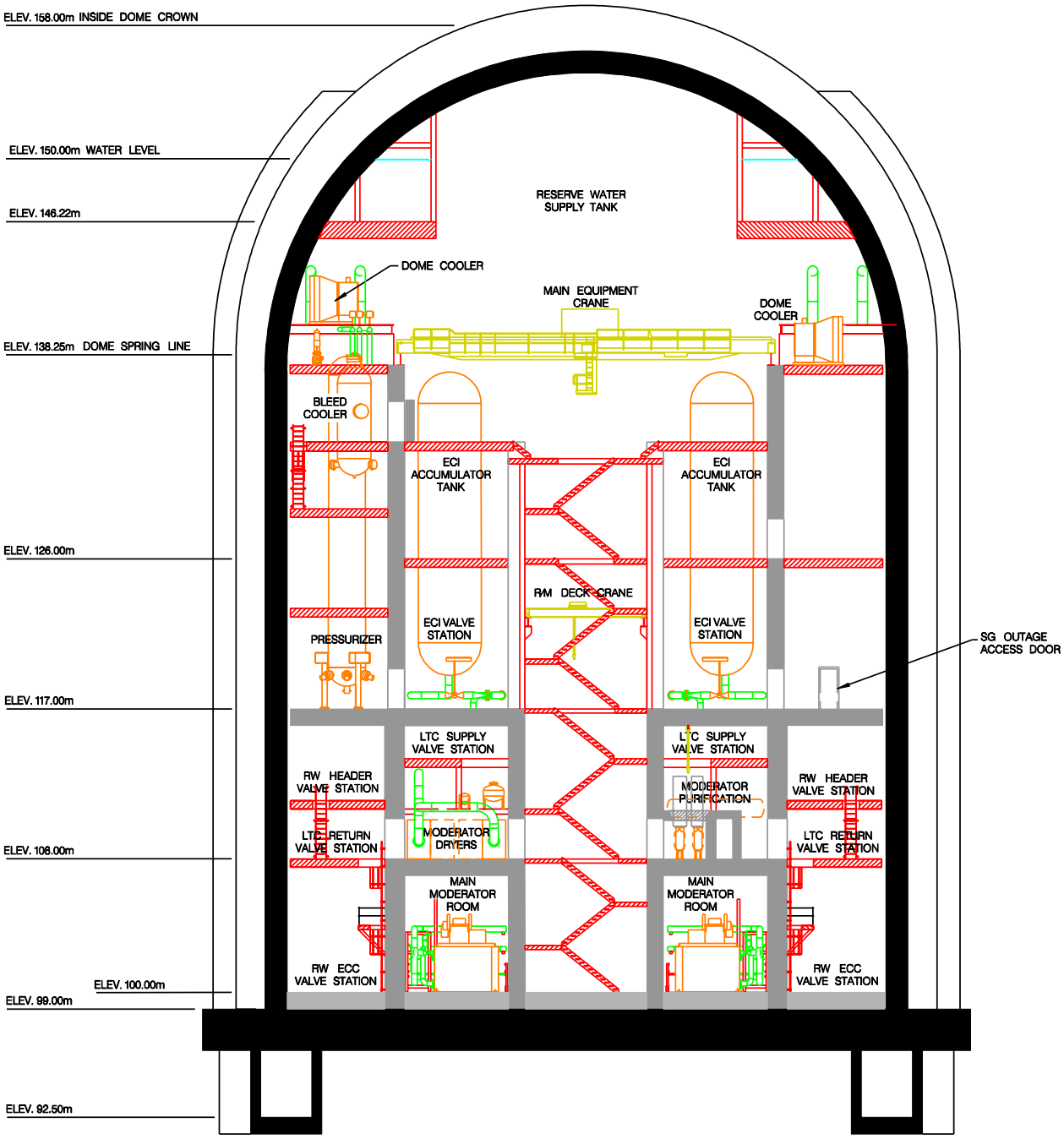

Figure 3.1-9 ACR-700 Reactor Building – B Side Section

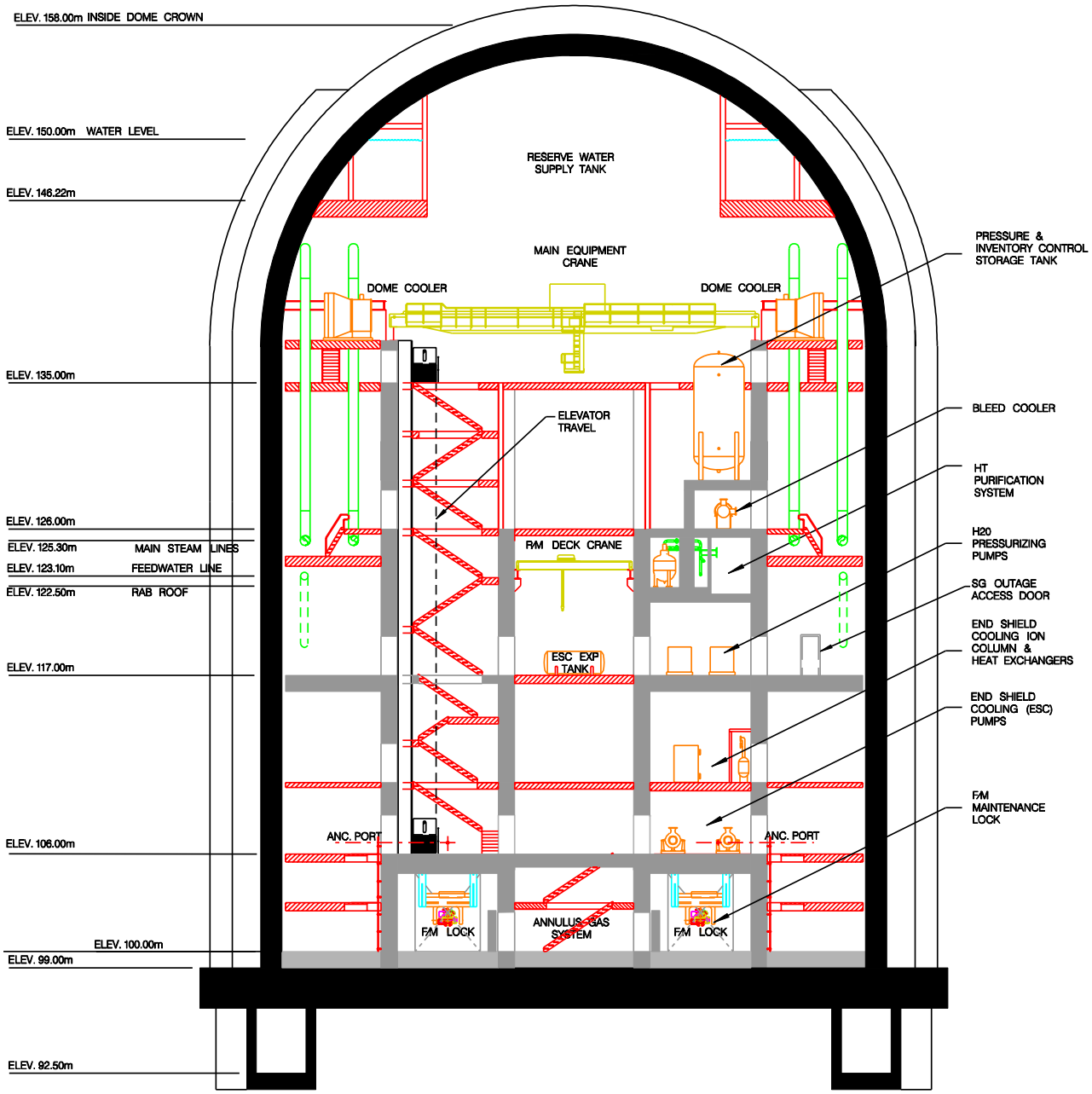

Figure 3.1-10 ACR-700 Reactor Building - D Side Section

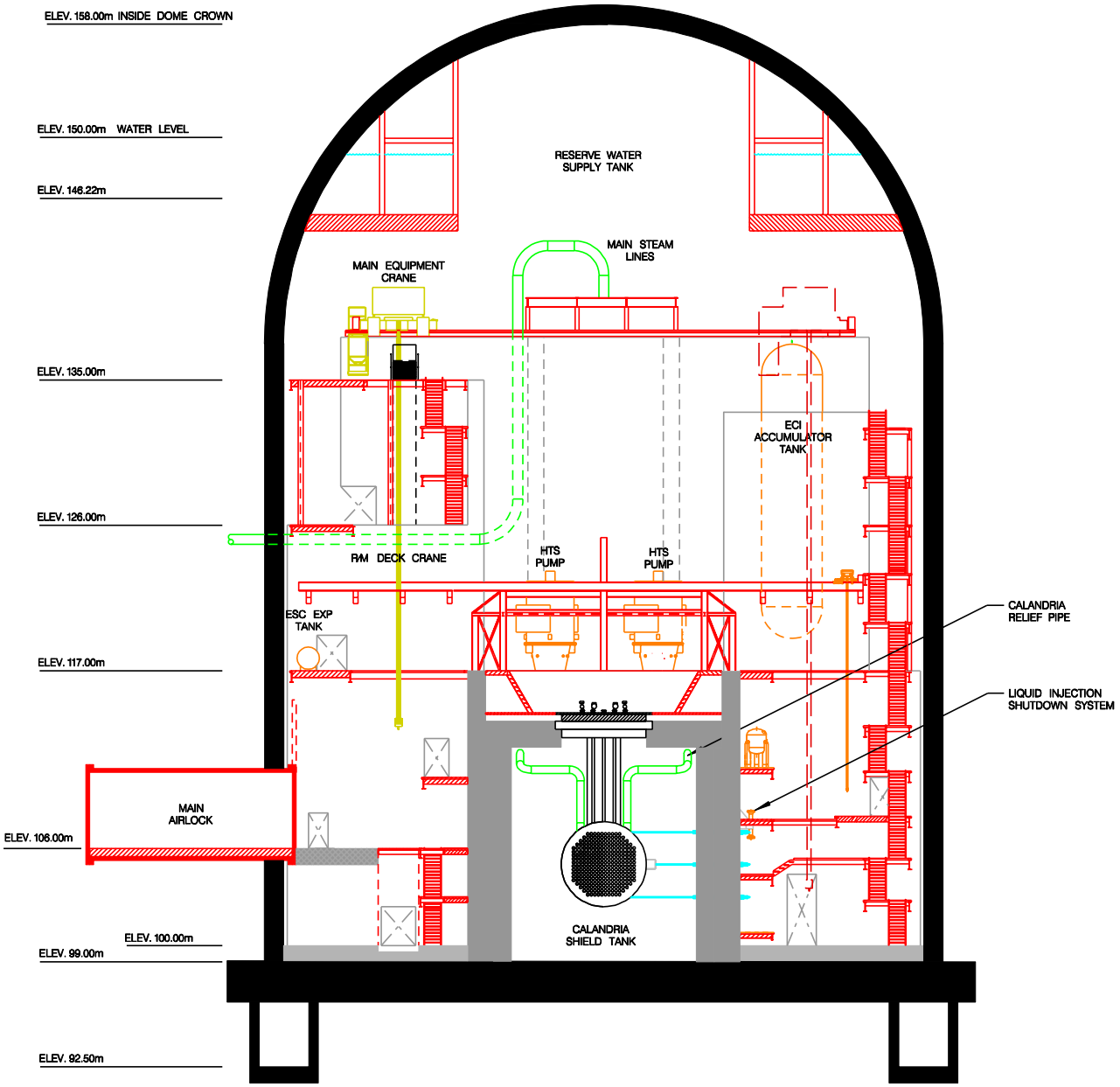

Figure 3.1-11 ACR-700 Reactor Building - B-D Axis Cross Section

3.1.3.3 Airlocks

Entry into the reactor building is provided from two airlocks. The main airlock, set at grade elevation, is sized to accommodate the largest equipment and components required for routine maintenance including a fuelling machine, and flasks for transferring reactivity mechanisms and heat transport pump motors. Personnel traffic, small maintenance and service supplies are via a small door installed within the door of the main airlock.

The auxiliary airlock is located approximately opposite to the main airlock at a higher elevation. Its purpose is to provide a geographically separate, secondary means of egress from the reactor building.

Each airlock is provided with hermetically sealed pressure doors and with an air valve for pressurization and depressurization which maintain the integrity of containment at all times. All airlock operations relating to containment safety function are performed pneumatically and can be carried out either from within the airlock or from outside or inside the reactor building.

3.1.3.4 Shielding Doors

Shielding doors located within the reactor building separate the accessible areas and the fuelling machine vaults from the fuelling machine maintenance locks. Shielding doors are also provided between the accessible areas and the moderator HX rooms and the steam generator enclosures.

3.1.3.5 Linings and Finishes

With the exception of the containment liner, which is carbon steel, the concrete surfaces and walls within the reactor building are finished with one of the following coatings:

- a fibreglass reinforced epoxy,
- a non–metallic lining of containment quality, or
- an epoxy paint of decontamination quality.

3.1.3.6 Access Control

Access control between the accessible and inaccessible areas is provided by doors and hatches, which are locked during reactor operation.

3.1.3.7 Maintenance

Rooms containing potential heavy water leakage sources, such as the main moderator rooms, have controlled atmospheres.

The reactor building main crane, augmented by monorails and hoists, facilitates maintenance of equipment in the reactor building.

3.2 Reactor Auxiliary Building

The RAB houses and protects nuclear safety related systems and components that are required for the safe operation and safe shutdown of the reactor. The reactor auxiliary building (RAB) areas interface with the reactor building (RB) through the main and auxiliary airlocks. The RAB surrounds the RB to provide maximum RB perimeter wall access to accommodate system umbilicals required for the systems listed below.

3.2.1 Design Bases

3.2.1.1 Functional Requirements

- The RAB houses and supports the following:
  - Secondary control area (SCA);
  - Spent fuel bays (SFB);
  - SFB purification and cooling systems;
  - Long term cooling (LTC) pumps, heat exchangers and valves;
  - Main and auxiliary air locks;
  - Main steam safety valves (MSSV), main steam isolation valves (MSIV) and atmospheric discharge valves (ASDV) enclosures;
  - Main steam and feedwater line supports and anchors;
  - Seismically qualified electrical distribution equipment and battery rooms;
  - RAB and RB ventilation equipment rooms and related ducting;
  - New fuel storage
  - New fuel loading areas and equipment;
  - Fuelling machine emergency water system;
  - Major maintenance workshop for fuel handling equipment such as the fuelling machine and its maintenance transport carriage;
  - Spent fuel transfer equipment and related process equipment;
  - Dry fuel flasking and shipping facilities;
  - RCW valve station / RSW valve station;
  - RCW pumps, heat exchangers and piping;
  - Chilled water equipment;
  - NSP electrical power distribution system equipment;

  - UPS for each unit;
  - RSW supply and return lines;
  - Instrument air supply (no compressors, no tanks);
  - Decontamination facility.
- The RAB provides storage and handling of spent resin waste.
- The RAB provides facilities for leakage detection and collection for the SFB and spent resin waste tanks.
- The RAB provides protection for systems, components and equipment against:
  - external events such as DBE, wind, precipitation, tornadoes and, when warranted, site specific conditions such as floods.
  - internal events such as fires and flooding.
  - missiles and pressure differentials of a tornado, when required.
- The layout:
  - is suitable for normal access and maintenance of systems, components and equipment and provides shielding against radiation from areas containing radioactive sources.
  - provides access for the inspection and testing of RB containment penetrations and prestressing system.
- The RAB structure is designed for strength (to prevent failure) and for serviceability (not to restrict the intended use and occupancy of the building). The design of the RAB structural elements includes the following conditions:
  - Construction loads, including loads due to installation (heavy duty cranes, vehicles, construction equipment, etc.).
  - Normal operating and shutdown conditions.
  - Accident and environmental conditions.
- The RAB structure is designed for a fire event. When the use of combustible materials cannot be avoided, efforts are made to reduce the combustibility by minimizing the proportion of combustibles, by using fire retardant additives or by providing fire-resisting coatings. Separation between various systems, structures and components is provided.
- Certain areas of the RAB are enclosed or shielded from radiation. The thickness and material provides adequate shielding to protect the workers.
- Safety requirements for the RAB are as follows:
  - Physical separation is provided to ensure that fire or flooding in the building or in the other areas of the plant does not impair the safety function of safety related systems; and the ability to operate the plant.

- The RAB and the MSSV/MSIV enclosure are protected from the missiles and pressure differentials of a tornado, when warranted by site environmental conditions.
- The following is required during and after a DBE:
  - Structural integrity of the RAB and MSSV/MSIV areas are maintained;
  - Qualified structures maintain their integrity despite the collapse of unqualified systems and components;
  - The water in the spent fuel bays does not drain during and after DBE;
  - Structural integrity of all tanks holding active wastes.
- Barriers are designed to prevent the spread of harsh environment:
  - Between systems required for normal operation of the plant, systems required to mitigate accident conditions and safety support systems;
  - accident conditions and safety support systems;
  - between areas containing safety related systems;
  - from the turbine building (TB) to the RAB;
  - between long term cooling system rooms and other area of the RAB; and
  - between the feedwater and the RAB internals to avoid harsh environmental conditions due to flooding inside the RAB after feedwater line break.
- For protection of systems and components the following is provided:
  - Safety related systems are located above the maximum flood levels resulting from failure of systems containing substantial amounts of water such as RCW, RSW, etc; and
  - Separation or barriers are provided between safety related systems and non-safety related systems for fire, flooding, missiles including pipe whip, and extreme structural loads.
  - Separation is provided between safety related systems and between their redundant divisions or components for fire, flooding, missiles including pipe whip, and extreme structural loads.
  - Where separation cannot be achieved due to physical or operational constraints, an assessment is carried out to show that hazards impair the safety functions. If hazards are present, components are qualified to withstand the hazard, or designed to fail to a state where the required safety function will be performed.
- For fire protection, the following requirements apply for fire protection in the RAB:
  - Separation of systems required for normal operation of the plant areas and systems required to mitigate accident conditions as well as safety support systems areas are provided with fire walls, floors, doors and penetrations.

- Fire barriers are provided to prevent the spread of fire from the surrounding buildings to areas in RAB containing systems required for normal operation of the plant;
- Fire barriers are provided between RB and RAB.
- Fire separations are provided within areas that contains redundant safety related systems or their divisions of the RAB to ensure that at least one system/division of the redundant safety related systems or their divisions can perform the essential safety functions;
- Fire barriers are provided between the redundant safety related systems or their divisions within each safety and safety support system in the RAB. This will ensure that fires do not affect redundant equipment within the same system/division and provide high reliability that the system/division will remain available during a fire event initiated within the system/division.
- Exits provided on the basis of National Building Code of Canada (NBCC) requirements for personnel safety. Fire assessment is useful to determine hazard levels and influence material choice and addition of barriers or enclosures.

- For radiation protection the RAB has been provided with adequate shielding to suit both normal and post LOCA operating requirements.
- For tornado protection, the RAB has been designed to provide adequate protection against tornado conditions including tornado missiles. The design of RAB is such that the RAB structure is able to withstand the tornado loads and tornado missiles and to ensure that the release of radioactive material to the environment following tornado is within regulatory limits and to ensure that the safety related system inside the RAB remains functional.

3.2.2 Description

The reactor auxiliary building (RAB) is a multi storey, reinforced concrete/structural steel structure. Figure 3.2-1 shows a typical floor plan of the RAB. A typical section is shown in Figure 3.2-2.

The reactor auxiliary building surrounds the reactor building and is seismically qualified to design basis earthquake and tornado protected.

Internally, it is divided into three major areas.

A horseshoe surrounding the A, B and C sides of the RB defines two of these areas. This shape is divided equally into two halves along the B-D axis into Division 1 process or Electrical ODD equipment area, A and B sides, and Division 2 process or Electrical EVEN equipment area, B and C sides.

The third area of the building, on the D side of the RB, accommodates an equipment marshalling RB/RAB interface area and RB main airlock, the spent fuel storage bay, the two spent fuel reception bays and associated fuel handling facilities, the spent fuel bay cooling and purification

system pumps and heat exchangers, and the clean air discharge ventilation system. In addition, there is a sub floor below the spent fuel bays for leak detection and storage space for spent resin and active liquid waste tanks.

Three major corridors are provided along the A, B and C sides of the RB for access to all areas within the two divisions. They also, in turn, define a structural interstitial space between the RB and RAB allocated for power and control cable routes.

3.2.2.1 Main Steam and Feedwater Lines Support Structures

The main steam lines (MSLs) and the feedwater lines (FWLs) between the reactor building and the turbine building are routed on the roof of the reactor auxiliary building. For this reason, the roof has been designed to withstand the loads from the steam and feedwater lines and prevent ingress of steam and water into the RAB.

Main steam safety valves (MSSV), main steam isolation valves (MSIV) and atmospheric discharge valves (ASDV) enclosure structure is also located in this area, above the reactor auxiliary building roof.

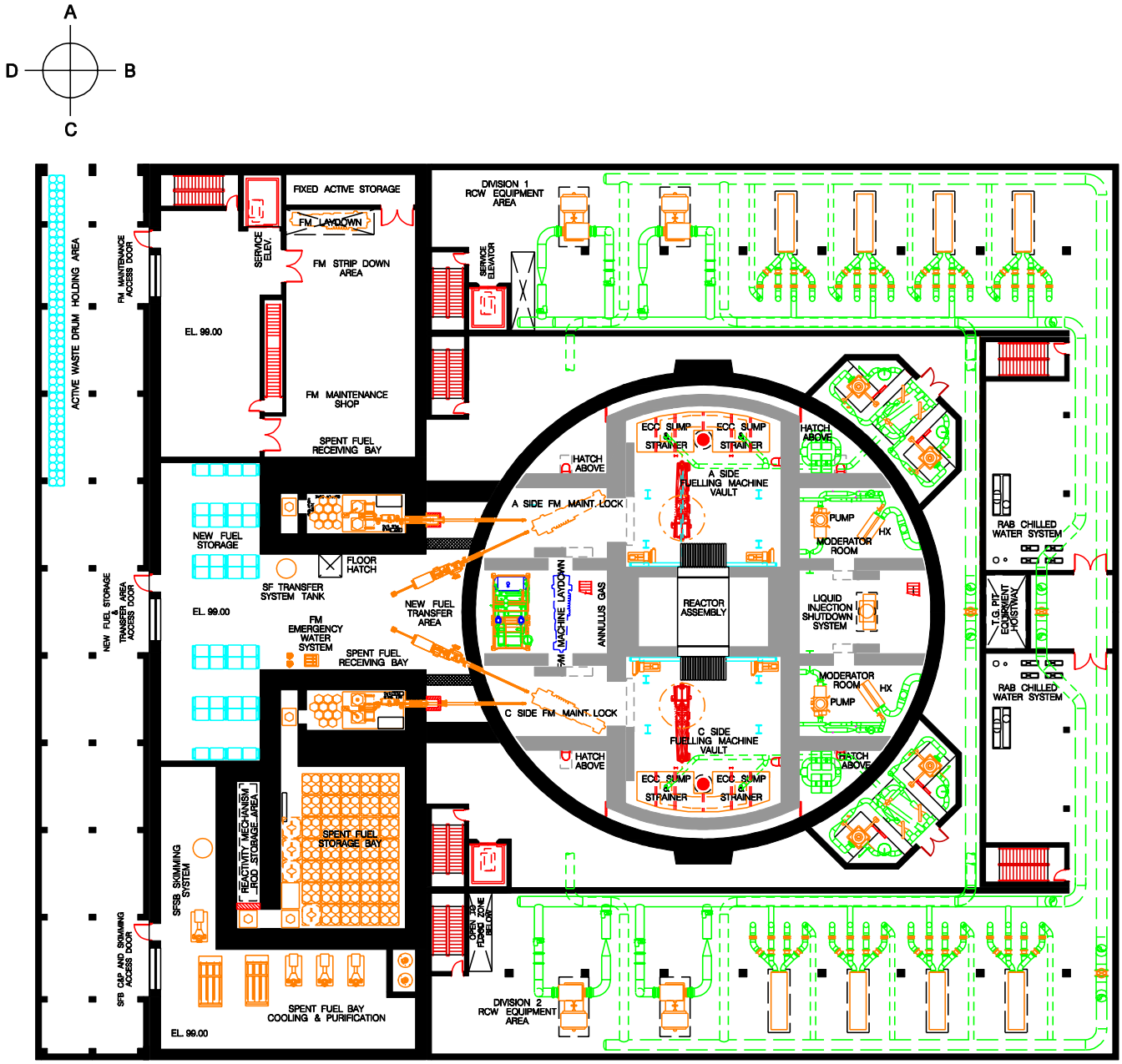

Figure 3.2-1 ACR-700 Reactor Auxiliary Building – Plan at Elevation 99.0 m

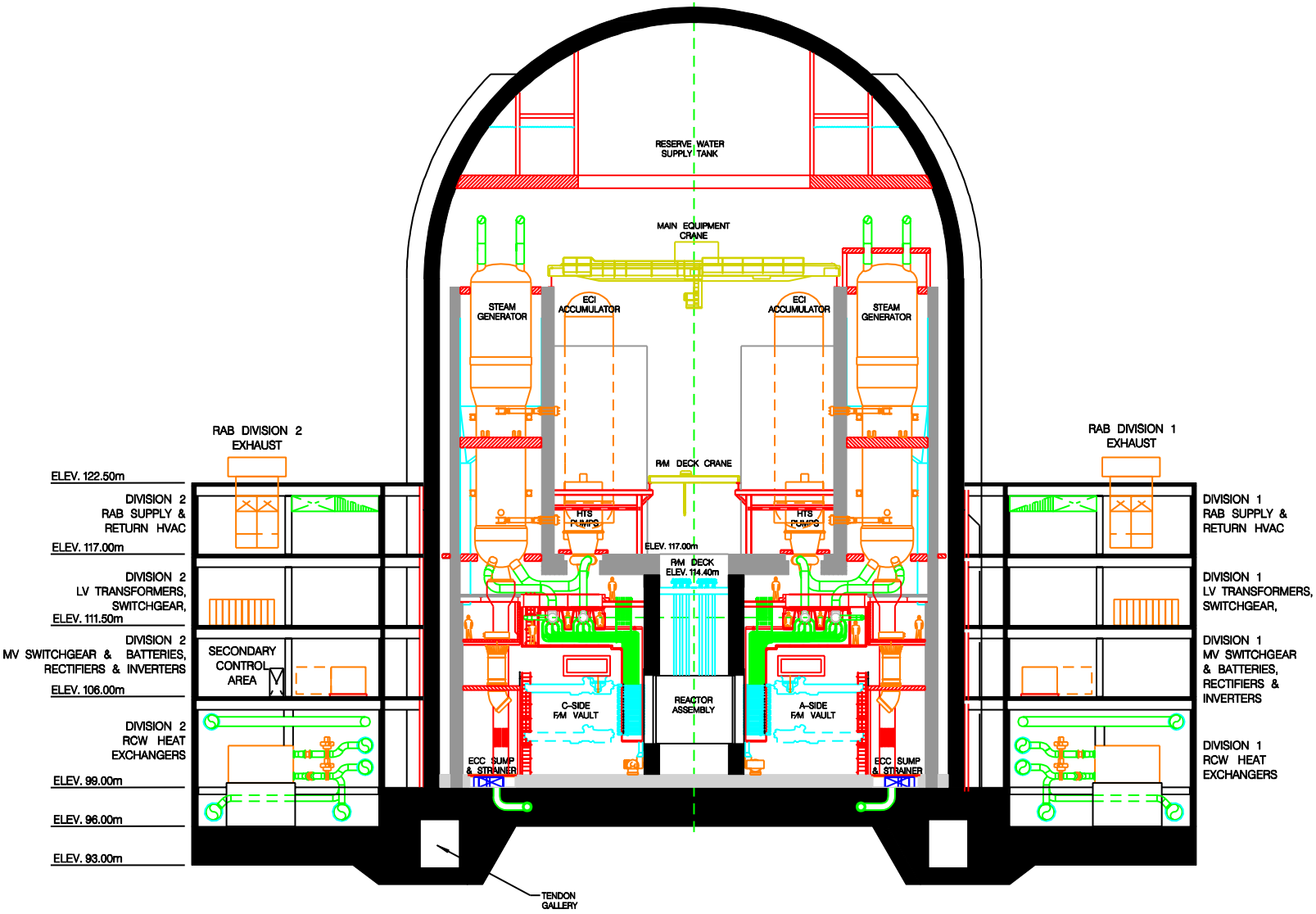

Figure 3.2-2 ACR-700 Reactor Auxiliary Building A-C Axis Cross Section

3.3 Turbine Building

The turbine building houses the turbine generator and its auxiliary systems, the condensers, the condensate and feedwater heating plant. The turbine generator, feedwater and condensate plant are of conventional design following standard commercial practice.

3.3.1 Design Bases

- The Turbine Building structure houses and supports the following:
  - High and low pressure turbines;
  - Turbine generator;
  - Main steam headers;
  - High and low pressure heaters;
  - Main steam control valves;
  - Turbine bypass piping and valves;
  - Drain storage tanks;
  - Condenser units and supporting systems;
  - Main and auxiliary feedwater pumps;
  - Condensate pumps;
  - BOP RCW heat exchangers;
  - BOP electrical power distribution system equipment;
  - Miscellaneous systems such as oil purifier, shaft seal oil, drain cooler systems;
  - Feedwater heating;
  - Turbine building crane;
- The turbine building structure also:
  - protects the systems, components and equipment against external events such as seismic, wind, precipitation and, when warranted, site specific conditions such as tornado and floods.
  - provides a layout that is suitable for normal access and maintenance of systems, components and equipment.
  - provides a controlled environment for staff and equipment.
  - minimizes the spread of fire, smoke and steam from the turbine building to adjacent buildings through use of fire walls and penetration seals.

- The turbine foundation block functions as a structurally independent supporting system to carry the weight of the turbine generator machine.
- Safety related systems in the turbine building are minimized. No safety support systems are located in the TB;
- Prevent damage to RAB, main steam safety valves (MSSVs) through appropriate seismic qualification, fire protection, pressure resistant walls, and blow out panels.
- Areas subjected to fire hazard are separated from other areas by firewalls and concrete floors.
- The turbine generator is provided with a fire protection system such as a sprinkler or foam system.
- Where necessary to maintain an essential safety related function, outdoor oil filled transformers are separated by a fire wall or equivalent spatial separation.
- Outdoor oil filled transformers have been provided with dikes to contain any oil spillage or leakage. They are also provided with a deluge fire extinguishing system.
- Provides pipe rupture protection against:
  - The dynamic effects of a postulated pipe rupture in any high-energy system. These effects shall not cause consequential damage to the following safety related systems and structures, to the extent that their safety functions could not be performed:
    - Condenser steam discharge valves (CSDVs)
    - Turbine stop valves

3.3.2 Description

The turbine building is located on the 'D' side of the reactor building with the turbine shaft alignment perpendicular to the RB thus assuring that any turbine generated missiles will not impact on containment, safety system areas of the reactor auxiliary building, the main control building or secondary control area. This is also the optimum location with respect to ease of access to the main control room.

The turbine building is connected to the reactor auxiliary building via the maintenance building and crane hall. The turbine building consists of a turbine hall, and an auxiliary bay. The turbine hall and its auxiliary bay form an integral steel–framed building on a common foundation and comprise the main structure in the balance of plant.

The turbine auxiliary bay is adjacent and parallel to the turbine hall. It contains electrical equipment compressors, cooling units, heat exchangers,pumps, and derator tank.

The loading bay in the turbine building is at grade level and is situated at the end of the turbine hall.

The building complex has a reinforced concrete mat foundation. The turbine-generator pedestal is a reinforced concrete structure rising from its foundation slab, which in turn rests on the foundation. The suspended floors are reinforced concrete slabs with structural steel supports.

The turbine building is enclosed on all sides with steel cladding, and a built-up roof. Blow-out panels are placed in the walls and roof to release the internal pressure in the event of a main steam line break within the turbine . The turbine building is seismically qualified and designed to prevent any collapse causing damage to safety related structures and systems.

Figure 3.3-1 shows a conceptual plan layout of the turbine building and Figure 3.3-2 shows a section.

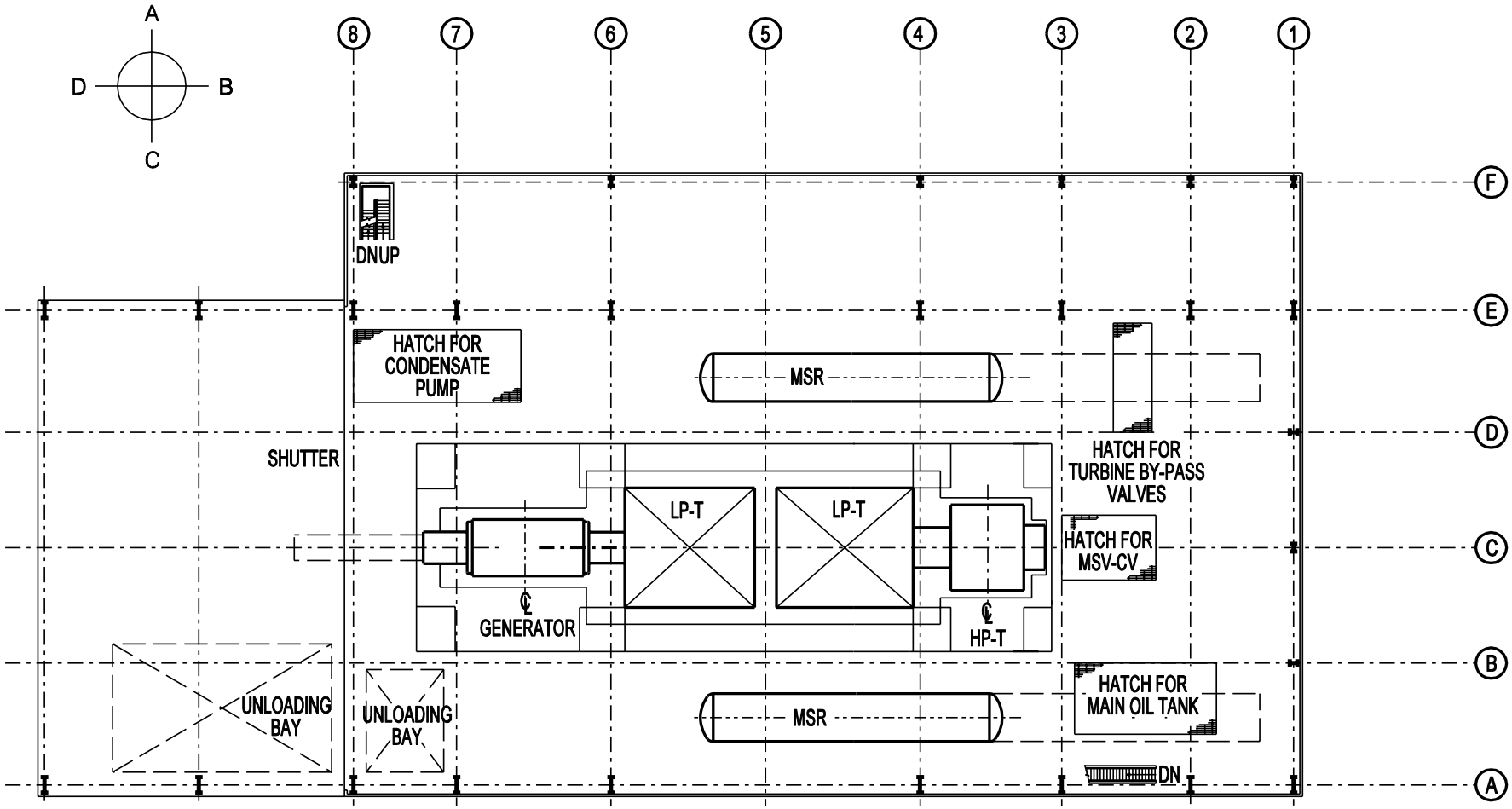

Figure 3.3-1 Conceptual Plan of the Turbine Building

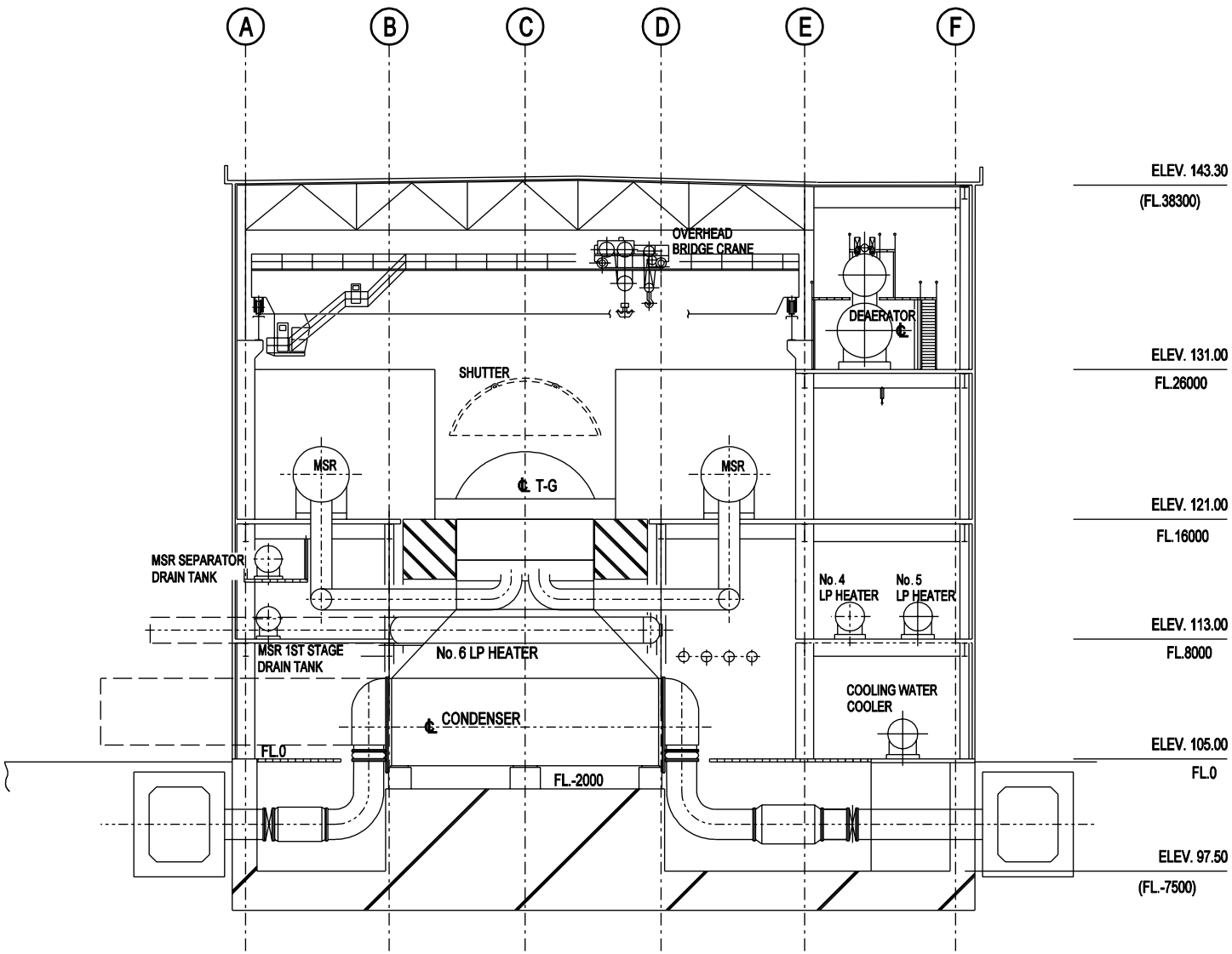

Figure 3.3-2 ACR-700 Turbine Building Section

3.4 Main Control Building

3.4.1 Design Bases

The main control building (MCB) provides the facilities and environment for the operating staff to monitor, control, and operate each unit in both normal and abnormal modes, including communication system and post accident management (PAM). The MCB houses control equipment and main control rooms for each unit, a common work control waiting and assembly area, a common work control, outage management, technical support centre, miscellaneous offices, kitchen and washroom facilities, and ventilation systemThe building structure is seismically qualified to the DBE and tornado protected.

3.4.2 Description

The main control building (MCB) is a multi storey structure consisting of a reinforced concrete substructure and a braced steel frame superstructure. The building structure is seismically qualified to design basis earthquake, and tornado protected.

Figure 3.4-1 shows a conceptual plan layout of the main control room and technical support areas.

Access to the MCB is from the service building. Personnel working within the MCB have access to all other buildings via the MCB crane hall. An environmentally and seismically qualified route is also provided from the main control room to the secondary control area from each unit in the respective RAB.

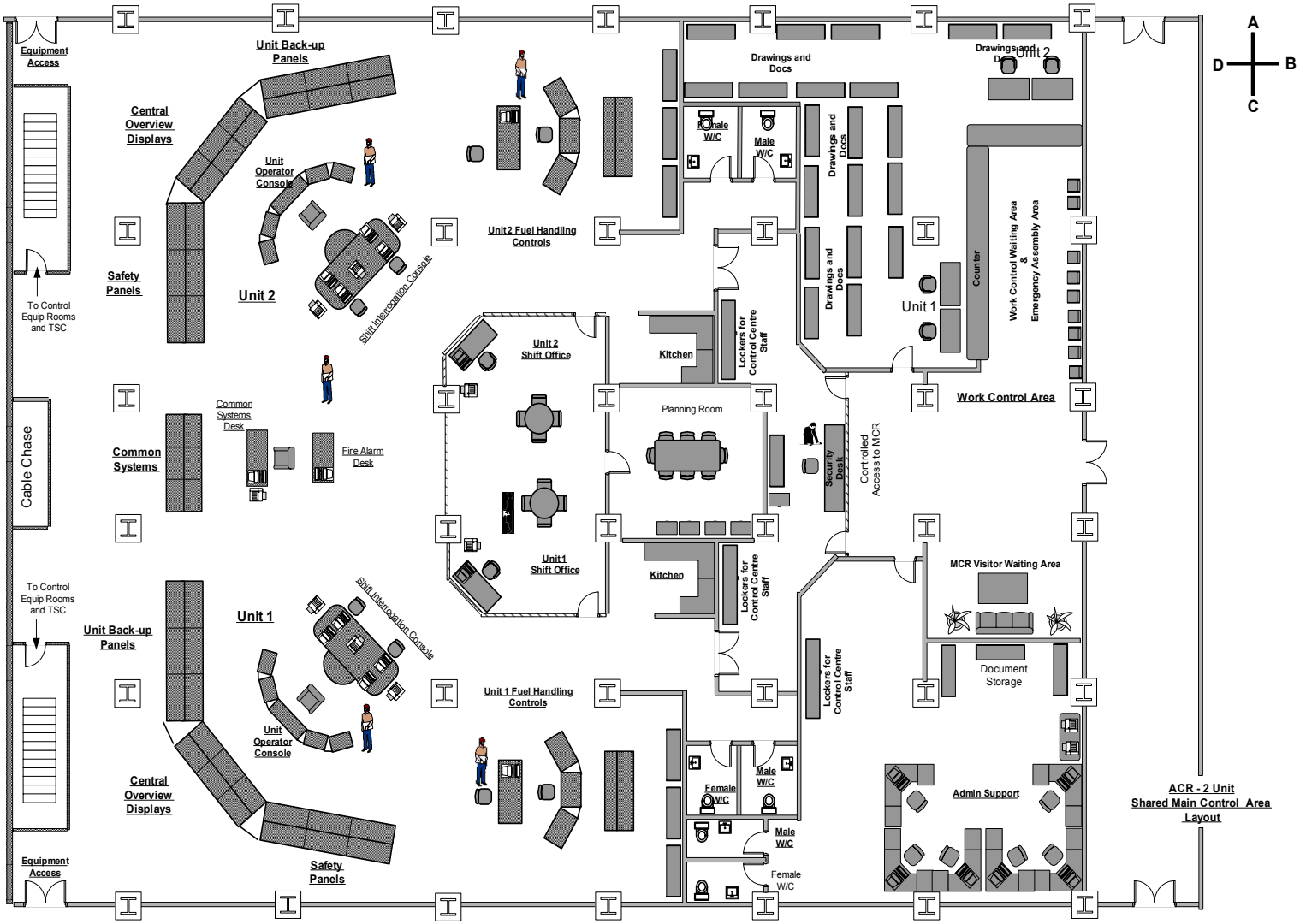

Figure 3.4-1 ACR-700 Main Control Building – Plan at Elevation 117 m

3.5 Service Building

3.5.1 Design Bases

- The two unit dedicated SB houses and supports maintenance and administrative services and facilities which are not accommodated in the maintenance buildings. These facilities and services are divided into the following categories:
  - Conventional plant services which include:
    - control maintenance and stores area;
    - zone 2 personal tool storage lockers and crew tool box storage areas;
    - control and instrumentation maintenance shop;
    - security controlled personnel and visitors entrance for the station;
    - personnel badge and radiation monitoring area with health physics facilities;
    - male and female change and shower facilities for all normal site staff including offsite visitors and administration staff;
    - laundry facility.
  - Administration services which include:
    - reception and waiting area;
    - health physics work area;
    - clerical facilities; and
    - telephone control room
  - Safety requirements: The service building shall be seismically qualified not to collapse causing damage to safety related structures.

3.5.2 Description

The service building (SB) is a conventional multi storey structure consisting of a reinforced concrete substructure and a braced steel frame superstructure. The service building is seismically qualified not to collapse causing damage to the main control building (MCB) and the reactor auxiliary building (RAB).

3.6 Maintenance Building

3.6.1 Design Bases

- The maintenance building houses and supports the following:
  - all the required workshops, laydown areas and equipment handling facilities required for day–to–day operations and maintenance of two-unit plant equipment and service including;
    - active liquid waste tanks and filtration system
    - D_2O and H_2O supply and cleanup
  - access for personnel, equipment and maintenance systems and services to, and between, the RB and the RAB via crane hall;
  - offices and planning rooms required for maintenance teams;
  - adequate washrooms for both male and female personnel;
  - radiation protection and maintenance shop;
  - active (zone 3) and non-active (zone 2) chemical laboratories;
  - main compressed air system supply equipment room;
- Provide storage and sorting area for the solid waste;
- Provide adequate shielding for normal operating requirements;
- Provide a suitable zoning concept to prevent or limit the spread of contamination and to ensure that radiation exposure of staff and plant emission levels will not exceed established limits;
- Safety requirements: The maintenance building is seismically qualified not to collapse causing damage to safety related structures.

3.6.2 Description

The maintenance building (MB) is a multi storey structure consisting of a reinforced concrete substructure and a braced steel frame superstructure. It includes the crane hall, which is a multi-storey open space, likewise consisting of a reinforced concrete substructure and a braced steel frame superstructure.

The building is seismically qualified.

The MB houses facilities for maintenance of the two-unit plant. The crane hall acts as an internal traffic route, allowing large vehicles entry for transport of material, services or equipment to each unit. The crane hall acts as a buffer between the major buildings, TB, RAB,

MB, and main control building (MCB). A grade level connection is provided for direct access to the reactor building main airlock through the RAB equipment marshalling area.

3.7 Cooling Water Structures

3.7.1 Condenser Cooling Water Pumphouse

The condenser cooling water pumphouse structure has a reinforced concrete substructure and a braced steel frame superstructure. The pumphouse contains the condenser cooling water (CCW) pumps, screen wash pumps, trash racks, screens, and chlorination equipment, if required. Depending on site conditions and utility preference, a common condenser cooling water pumphouse and related intake and outfall structures can serve a twin-unit ACR-700 provided adequate separation is provided.

3.7.2 Raw Service Water Pumphouse

The raw service water pumphouse contains the Division 1 and Division 2 raw service water (RSW) pumps, and related facilities. It has a reinforced concrete substructure and superstructure. The RSW pumphouse, with all contained systems, is seismically qualified to the design basis earthquake, and tornado protected. Physical separation is provided between Unit 1 and Unit 2 RSW pumps.

3.8 Diesel Generator Buildings

3.8.1 NSP Diesel Generator Building

The seismically qualified NSP diesel generator buildings are reinforced concrete structures. The buildings are separated from all other building structures by a minimum distance of 6.0m, or by a fire wall with a fire rating of at least 3 hours. The diesel generator sets rest on foundation structures separate from adjacent structures to minimize vibration transmission to other areas of the plant. They have been designed to be stand-alone units and are complete with all auxiliaries, day tanks, and cooling and ventilation systems. Diesel component removal is provided by large access doors directly to the exterior.

The diesel generator buildings are shared between the two units.

3.8.2 BOP Diesel Generator Building

The BOP diesel generator building consists of a reinforced concrete substructure and a structural steel superstructure.

3.9 Auxiliary Buildings and Structures

Water Treatment Plant

The design and location of the water treatment plant is dependent on site conditions and utility preference. Typically, the water treatment building has a reinforced concrete substructure with a braced steel frame superstructure.

The water treatment plant is normally designed for two ACR-700 units, but can be increased to serve multiple units.

TABLE OF CONTENTS

SECTION **PAGE**

4. REACTOR 4-1

4.1 Reactor Assembly 4-1
4.1.1 Calandria Assembly 4-1
4.1.1.1 Design Bases 4-2
4.1.1.2 Component Description 4-3
4.1.2 Fuel Channel Assembly 4-5
4.1.2.1 Design Bases 4-5
4.1.2.2 Component Description 4-6
4.1.2.3 Fuel Channel Pressure Boundary 4-7
4.1.3 Reactivity Control Units 4-12
4.1.3.1 Design Bases 4-12
4.1.3.2 Component Description 4-13
4.2 Fuel Design 4-26
4.2.1 Design Bases 4-26
4.2.2 Design Description 4-27
4.2.2.1 Addition of Burnable Neutron Absorber 4-27
4.2.2.2 Uranium Enrichment 4-27
4.2.2.3 Fuel Elements with Increased Internal Voidage 4-27
4.2.2.4 Bearing Pad Arrangement 4-27
4.2.2.5 Flat Endcaps 4-28
4.2.2.6 Endplate Orientation 4-28
4.2.3 Fuel Management 4-28
4.3 Nuclear Design 4-30
4.3.1 Design Bases 4-30
4.3.1.1 Coolant Void Reactivity and Fuel Burnup 4-30
4.3.1.2 Flux and Power Distribution Control 4-32
4.3.1.3 Reactivity Feedback and Coefficients 4-32
4.3.1.4 Maximum Controlled Reactivity Insertion Rate 4-33
4.3.1.5 Shutdown Margins 4-34
4.3.1.6 Stability 4-35
4.3.2 Design Description 4-36
4.3.2.1 Nuclear Design Description 4-36
4.3.2.2 Power Distribution 4-36
4.3.2.3 Reactivity Coefficients 4-39
4.3.2.4 Delayed Neutrons and Reactor Kinetics 4-42
4.3.2.5 Control Requirements and Reactivity Worth 4-43
4.3.2.6 Shutdown Systems 4-44
4.3.2.7 Reactivity Variations due to On-Power Refuelling During Equilibrium Operation 4-45
4.3.2.8 Reactor Dynamics and Control 4-45
4.3.2.9 Calandria and Fuel Channel Irradiation 4-47

TABLE OF CONTENTS

SECTION **PAGE**

4.4 Thermal Hydraulic Design 4-63
4.4.1 Design Bases 4-63
4.4.2 Thermal and Hydraulic Design of the Reactor Core 4-64
4.4.2.1 Critical Channel Power 4-64
4.4.2.2 Channel Flow Distribution 4-64
4.4.2.3 Header-to-Header Pressure Drop 4-64
4.4.2.4 Influence of Power Distribution 4-64
4.4.2.5 Fuel Channel Flow Determination 4-65
4.4.3 Testing and Verification 4-65

4. REACTOR

The ACR-700 reactor is designed to use SEU fuel and light water coolant. Similar to the CANDU 6 design, the ACR-700 reactor has an efficient, low pressure heavy water moderator and uses low neutron absorbing zirconium alloys for the core structures, including horizontal fuel channels and fuel cladding that contains the fuel.

4.1 Reactor Assembly

The reactor assembly comprises a cylindrical structure (the calandria assembly) within a water-filled, carbon steel-lined concrete structure (the calandria vault), fuel channel assemblies, and reactivity control units.

The calandria vault is built of ordinary concrete, and is filled with light water. The water serves both as a thermal shield and as a cooling medium.

The ACR reactor design retains the small diameter horizontal fuel channels that contain high pressure, high temperature heat transport system coolant. This allows the use of a separate low pressure moderator system in which the reactivity control devices operate. In order to maintain sufficient positive reactivity fuel is replaced while the reactor is on power. This feature contributes to high availability factors and improved outage flexibility since refuelling outages at fixed cycle times are not required.

The CANDU heavy water-moderated, slightly enriched uranium-fuelled, pressurized light water reactor utilizes the ‘pressure tube’ concept. This consists of an array of horizontal pressure tubes containing the reactor fuel that pass through a large cylindrical vessel (the calandria) containing the heavy water moderator and reflector.

Pressurized light water coolant is pumped through the pressure tubes, cooling the fuel and conveying heat from the fuel to the outlet headers and to the steam generators.

There are separate circuits for the moderator and the heat transport system. Any local failure of the moderator pressure boundary will not result in the failure of the heat transport boundary.

During normal operation, control absorber and zone control units are used to control the reactivity in the reactor core. Under accident conditions, the reactor is shut down rapidly either by inserting the shutoff rods into the reactor core, or by injecting liquid poison into the heavy water moderator in the calandria.

4.1.1 Calandria Assembly

The calandria assembly comprises the calandria vessel, two end shields, two end shield supports, two embedment rings and internal piping for end shield and vault cooling. This assembly forms a multi-compartment structure which supports and contains the fuel channel assemblies, reactivity control units, heavy water moderator and reflector, demineralised light water, carbon steel balls, and plate shielding (see Figure 4.1-1).

The calandria assembly (including calandria tubes) has a target operating life of 60 years at a lifetime plant capacity factor of 90%.

The highest level of quality assurance has been assigned to the calandria assembly for improved reliability, and to minimize the prohibitive actions needed to access and maintain the components within the structure.

4.1.1.1 Design Bases

The calandria assembly is designed to satisfy the following design bases:

4.1.1.1.1 Calandria

a) To contain the heavy water moderator and reflector enveloping the in-core portions of the fuel channels;

b) To support the in-core components of the reactivity control units;

c) To support the fuel channels;

d) To support the moderator piping, and any other piping attached to it.

4.1.1.1.2 End Shields

a) To shield the fuelling machine areas from the reactor during reactor operation and during shutdown;

b) To support the calandria;

c) To support and align the fuel channels in their respective lattice positions;

d) To provide a gas-filled annulus between the end fittings and lattice tubes in order to minimize the heat loss.

4.1.1.1.3 Calandria Tubes

a) To act as axial stays to help hold the end shields and calandria vessel together;

b) To surround the fuel channel pressure tubes and separate them from the moderator;

c) To support and accommodate pressure tube sag;

d) To support post accident heat transfer.

4.1.1.1.4 Selection of Materials

All materials used in the calandria assembly are selected based on their ability to withstand prolonged exposure to a variety of environments. These environments include radiation, high purity heavy water (moderator), helium cover gas, carbon dioxide annulus gas, demineralized and treated light water, reactor vault atmosphere, and various combinations of the foregoing.

Depending on location and use, the materials generally meet the following requirements:

a) Minimal effect of radiation on embrittlement of material, i.e., minimal shift in nil-ductility transition temperature due to integrated neutron flux.

b) Good corrosion resistance in general, and specifically to the free oxygen content of the heavy water moderator, and also the occasional presence of boric anhydrides and gadolinium nitrate (liquid poison) in the moderator.

c) Immunity to intergranular corrosion in heat-affected zones (due to welding).

d) Permit established techniques for fabrication and inspection.

Low carbon austenitic stainless steel Type 304L meets the above requirements and is used for all calandria assembly components (including nozzles and piping attachments).

The material for the calandria tubes satisfy the requirements stated above, as well as the following:

a) Low neutron absorption characteristics, necessary for use in the reactor core.

b) Corrosion resistance to the moderator and channel annulus gas atmosphere.

Zirconium alloly is the selected material for the calandria tubes. This material is made from ASTM B350 ingots (Reactor Grade R60804 material) but conforms to the higher mechanical properties required by the AECL technical specifications.

4.1.1.2 Component Description

4.1.1.2.1 Calandria

The calandria is a horizontal cylinder enclosed at each end by circular flat plates (calandria tubesheets). The calandria tubes (292) pass horizontally through the calandria and are rolled into the calandria tubesheets at each end.

Each calandria tube is roll expanded at both ends into bores in the calandria tubesheets, thereby completing the calandria vessel pressure boundary. Each of the pressure tubes is isolated from the heavy water moderator by a calandria tube.

This configuration results in the moderator system being independent of the high temperature, high pressure reactor coolant in the pressure tubes, and allows the calandria to be designed for low temperature and low pressure, with the following attendant advantages:

- The calandria operates at nearly atmospheric pressure, avoiding the need for a high-strength pressure vessel.
- The cool moderator can act as a heat sink under certain accident conditions.
- Reactivity devices penetrate only the low pressure moderator, not the high pressure reactor coolant. They are within the moderator pressure boundary, and therefore not subject to expulsion from the core by coolant pressure.

- Each pressure tube is surrounded by a calandria tube, the two being held concentric by bearings at both ends, located in the end shield lattice tubes, supplemented by annulus spacers positioned at approximately one-metre intervals along the length. The space between the tubes is filled with the annulus gas (carbon dioxide) that insulates the hot pressure tube from the relatively cold moderator, thereby improving thermal efficiency.

Tubular thimbles, which separate the calandria vault light water from the moderator heavy water and cover gas, provide access for the reactivity control units into the calandria.

Absorber guides for the reactivity control units penetrate the calandria, passing between the calandria tubes and locking into locators on the opposite wall of the calandria shell.

The calandria vessel is connected to the moderator system via inlet and outlet nozzles. Heat is generated in the moderator, mainly by the moderation of neutrons and gamma ray absorption. Heat is also transferred to the moderator from the calandria tubes and other in-reactor components. Moderator circulation within the calandria promotes uniform temperature through good mixing.

Rupture discs are provided at the top of the calandria at the upper ends of four discharge pipes to provide adequate discharge area for heavy water flow during certain accident conditions. A moderator cover gas system is provided in the discharge pipes above the moderator, to provide the calandria with normal pressure regulation, and to limit deuterium concentration in the calandria discharge pipes.

4.1.1.2.2 Calandria Tubes

The calandria tubes span the calandria shell horizontally on a 220 mm square pitch to form a circular lattice array. Calandria tubes are in-core components, and form a part of the calandria vessel pressure boundary as described above.

The calandria tubes are annealed and stress-relieved zirconium alloy grade R60804, which was specifically developed for in-core components because of its good mechanical properties, resistance to corrosion and radiation, and high neutron economy. The calandria tubes are blackened on the inside.

4.1.1.2.3 End Shields

Two end shields are integral parts of the calandria assembly, one end shield being welded to each end of the calandria. Each end shield is composed of lattice tubes (292), one shell, and two tubesheets (the calandria tubesheet and the fuelling tubesheet).

The calandria tubesheet is common to both the end shield and the calandria. It is exposed to heavy water moderator on the calandria side, and to a flow of cooling light water on the end shield side. The balance of the end shield consists of the fuelling tubesheet (which faces the fuelling machine vault), the end shield shell, and the lattice tubes. The lattice tubes are concentric to the pressure tubes and are joined to the tubesheets by a combination of rolling and

welding techniques. The lattice tube-to-tubesheet joints are designed to eliminate any geometry that could lead to crevice corrosion between the austenitic stainless steel components of the end shields. The end shield shell encloses the tubesheets and the lattice tubes.

The space within each end shield between the tubesheets and outside the lattice tubes is filled with cooling water and carbon steel balls. These balls, and the cooling light water, provide the necessary biological shielding during shutdown. The light water removes the waste heat conducted through the calandria tubesheets and the fuel channels. In addition to cooling the end shields, the shield cooling light water is circulated through the calandria vault to provide the required cooling and shielding.

4.1.2 Fuel Channel Assembly

The fuel channel assemblies support and locate the fuel within the reactor core, facilitate the cooling of the fuel by the Heat Transport System, provide shielding from radiation streaming from the core, and permit on-power fuel changing (see Figure 4.1-2).

4.1.2.1 Design Bases

Each fuel channel assembly is designed to satisfy the following:

a) Support and locate the nuclear fuel in a twelve bundle fuel string within the reactor core.

b) Provide a low neutron-absorbing containment for the fuel within the reactor core.

c) Permit the cooling of the fuel by the heat transport system.

d) Form the pressure boundary for the heat transport system coolant.

e) Provide shielding to attenuate radiation streaming through the channel.

f) Position the fuel channel with respect to the calandria end shield assembly.

g) Permit the free passage of fuel during fuel changing.

h) Provide for connections with the primary heat transport system feeder pipes and fuelling machines.

i) Withstand the loads and conditions defined in the fuel channel design specification.

j) Ensure that the relative axial positions of end fittings allow fuelling machine access to all end fittings without interference, and also avoid feeder-to-feeder interference.

k) Provide flexible seals* between the channel and the reactor end shield at both ends to seal the annulus gas system (AGS), and to accommodate axial movement of the fuel channel from irradiation creep/growth and thermal effects.

---

* These seals are part of the annulus gas system. They have provision for the AGS tubing, which provides a flow of dry CO_2 and O_2 to the channel annulus (to monitor any water leakage into the channel annulus from either the moderator or the heat transport system coolant - refer to Section 9.5.5).

l) Permit continuous AGS gas flow in the annulus between the pressure tube/end fitting assembly and the calandria tube/lattice tube assembly.

m) Prevent direct contact between the pressure tube and calandria tube during all normal and upset operating conditions by means of annulus spacers.

n) Provide a removable channel closure and removable fuel support plug that will permit on-power fuel changing.

4.1.2.2 Component Description

Each fuel channel assembly consists of a pressure tube, two end fittings, and associated hardware. The pressure tube is connected to an end fitting at each end by a roll-expansion mechanical joint. The pressure tube forms the in-core portion of the fuel channel and contains the fuel bundles. The end fittings are out of core extensions of the pressure tube, and extend out of the end shields past the feeder cabinets. The end fittings provide connections to the fuelling machine and feeder pipes. The outboard end of the end fitting is sealed by a removable channel closure with the inboard end containing a fuel support plug. The end fittings are supported inside the lattice tubes on a bearing sleeve at the inboard end and a journal ring mounted in the fuelling tubesheet. These sliding supports permit axial movement of the channel due to thermal expansion, creep, and irradiation induced growth.

Each pressure tube contains the fuel bundles and is positioned inside the calandria tube. Spacers in the annulus between the pressure tube and calandria tube separate the two tubes. The annulus between the fuel channel components and the reactor components is sealed at both ends by bellows. The annulus is supplied with a recirculating, dry gas from the annulus gas system through tubing connected to the bellows. This annulus gas is used to detect leaks by monitoring the moisture content of the gas, and it also provides an insulating and protective atmosphere for the pressure tube.

Feeder pipes connect the inlet and outlet end fittings to the reactor inlet header and reactor outlet header, respectively, to complete the heat transport system loop. Each feeder pipe is connected to an end fitting by a bolted connection. Coolant flows into the inlet end fitting, through holes in the liner tube, through the inlet fuel support plug, through and around the fuel bundles, through the downstream fuel support plug, through the liner tube, and out into the downstream feeder.

Each end fitting houses a fuel support plug which locates the fuel in the channel and provides some of the required radiation shielding. The fuel support plug is removed and stored in the fuelling machine during fuel changing.

The outboard end face of each end fitting makes a sealed connection with the fuelling machine so that the fuelling machine becomes an extension of the heat transport system during fuel changing. The channel closure is removed and stored by the fuelling machine during fuelling and is re-installed in the end fitting before the fuelling machine detaches from the channel.

4.1.2.3 Fuel Channel Pressure Boundary

This sub-section summarizes the nuclear pressure boundary design of the fuel channel assembly described in Section 5.1.1.2. The pressure-retaining items of the fuel channel assembly are: pressure tube, end fittings, rolled joints, channel closures, and the feeder to end fitting connection.

The objective is to design fuel channel assemblies to reliably provide containment for the nuclear fuel and the heat transport system coolant for the design life. The design allows access for the fuelling machines to replace the spent fuel bundles with fresh fuel during full-power reactor operation.

Selecting materials that minimize in-core neutron loss is a primary design requirement.

4.1.2.3.1 Fuel Channel Materials and Fabrication

The materials used in the fabrication of pressure boundary components of the fuel channel assembly and channel closures, as well as the fabrication and non-destructive examination (NDE) requirements, are defined in the AECL Technical Specifications and are discussed in the following:

Pressure Tube

Pressure tubes are made from extruded, cold-worked Zr-2.5Nb alloy. Samples from the front end of each pressure tube are tested for tensile properties. The front end of the pressure tube is the end which exits the extrusion press first.

The tubes are stronger in the circumferential (hoop) direction than in the longitudinal (axial) direction and show an increase in strength from the front end to the back end. These arise because the grain orientations (texture) of the tubes cause the circumferential direction to be stronger, and, during extrusion, the gradual cooling of the material in the extrusion press results in the end that emerges last from the extrusion press (the back end) having a slightly smaller grain size and higher strength than the front end.

The pressure tubes are installed in the reactor with their front ends at the outlet end of the fuel channels.

Fast neutron irradiation increases the tensile strength of Zr-2.5 Nb pressure tube material and reduces its fracture toughness. The majority of these changes have occurred before a fluence of approximately 10^{25} n/m^2 is reached. At higher fluences than this, the effects of irradiation are more gradual.

The material used for the pressure tubes comes from ingots that contain alloy and impurity elements in concentrations that are known to produce pressure tubes with good fracture toughness after irradiation.

The processing of the material from the ingots through the forging, machining, piercing, extrusion, and cold drawing stages is carried out using processes optimized to minimize the H concentration in the finished tubes.

End Fitting Body

End fittings require a combination of high strength and good corrosion resistance. The high strength and accompanying hardness are required mainly in the pressure tube rolled joint area to assure a strong, leak-tight connection. Corrosion resistance is also required to prevent deterioration of various seal faces. A modified Type 403 stainless steel meets all of these requirements.

End fitting material is examined volumetrically using ultrasonic angle beam methods in both the circumferential and longitudinal directions for internal flaws, and by magnetic particle or liquid penetrant methods for surface flaws.

Feeder Connection

The feeder connection consists of a type 403 stainless steel flanged elbow (ASME SA-487 CA6NM) connected to the end fitting sideport via a metallic gasket and eight cap screws. The elbow has a 90-degree bend and gradually transforms from a circular cross section same as the connecting feeder to an oval port. The cicular end of the elbow is welded to the type 316 stainless steel feeder pipe. The metallic gasket is made from Inconel and is not considered to be a pressure boundary component. The material for the cap screw is Inconel (ASME SB 637, Grade UNS- No7718).

Channel Closure

A general description of the materials for the fabrication of channel closure pressure boundary components is listed in Table 4.1.2-1.

Pressure Tube Creep and Growth During Service

Neutron irradiation at reactor operating temperatures induces irradiation creep (slow deformation caused by applied stress) and irradiation growth (deformation in the absence of applied stress) of zirconium components (pressure tube and calandria tube). Creep and growth contribute to the elongation of the pressure tubes and to their diametral expansion. The calandria tubes experience little change in length or diameter because they operate at low stress and at a low temperature and growth rates of the material are very low. The fuel channel also sags under the weight of the pressure tube, the fuel, and the coolant. Part of the resistance of the fuel channel to sag is derived from support by the calandria tube that has a low sag rate at the cooler moderator temperatures.

Irradiation induced growth occurs because the point defects (vacancies and interstitial atoms) produced by the neutrons and escape immediate recombination, migrate to preferred sites, such as dislocations and grain boundaries. Detailed transmission electron microscopy has shown that the dislocation density increases gradually during neutron irradiation. When dislocations (absent

in the starting material) appear in annealed Zirconium alloys, there is also an increase in the in-reactor deformation rate, and the deformation rate starts to increase from the lower rate of the annealed Zironium alloys toward the higher value more appropriate for the cold worked material. The pressure tubes are made from cold-worked Zr-2.5Nb that already contains some dislocations before installation in the reactor, and pressure tubes exhibit deformation rates expected for cold worked materials. Pressure tubes removed from a reactor have been examined to determine if there is any evidence of a sudden increase in the concentration of dislocations. No sudden increase has been found; it is a gradual increase. Similarly, no rapid increase in deformation rate has been observed in cold-worked Zr-2.5Nb pressure tubes. Additional material from pressure tubes removed from power reactors is being irradiated in high flux test reactors to confirm that no abrupt change in deformation rate occurs during pressure tube lifetime. The predicted maximums of pressure tube elongation and percentage diametral expansion due to creep and growth are 190 mm and 4.5%, respectively.

4.1.2.3.2 Overpressure Protection

As part of the heat transport system, the fuel channel assembly is protected from overpressure by devices and methods described in Section 5.1.3.3.

4.1.2.3.3 Rolled Joint Design

Pressure tubes are connected to the end fittings by roll-expanded mechanical joints, which provide a strong, leak-tight connection. The roll-expansion process reduces the pressure tube wall thickness as a result of pressure tube material extension in the radial and longitudinal directions.

When the rolled joint is being made, the pressure tube undergoes a wall reduction. The material extrudes radially into grooves in the end fitting (producing local ridges on the outside of the pressure tube) and axially inboard and outboard. The material that has extruded into the grooves is responsible for the axial strength of the joint and making the joint leak-tight. The tube rotates relative to the end fitting slightly, when the joint is being made and tight tolerances are imposed to allow the feeder connections to be made easily.

Many evaluations have been performed on roll expanded joints during various qualification programs and on assemblies removed from reactors. Among the parameters monitored have been the helium leak rate, the residual stress distribution in the Zr-2.5Nb and in the stainless steel, the pull-out strength, the stress relaxation effects, and the hydride re-orientation in the Zr-2.5Nb.

Zero clearance rolled joints (ZCRJ) have been used in all initial builds of reactors commissioned after Bruce ‘A’. The design makes use of an interference fit between the pressure tube outside diameter and the end fitting inside diameter prior to rolling. It results in a design that produces very low tensile residual stresses in the pressure tube.

4.1.2.3.4 Channel Closure

The function of the channel closure is to seal each end of the fuel channel assembly and to be removable so that fuel changing is possible. The basis of the channel closure design is a flexible metallic seal disc that makes a face seal against a ring in the end fitting. The seal disc is supported and retained by the body of the closure, which is held in position by jaws engaging a groove in the end fitting.

During fuel changing, the fuelling machine removes the channel closure and stores it in its magazine. Following the fuelling operation, the closure is re-installed in the end fitting and then the fuelling machine is disconnected. All of this is done at the full pressure and temperature operating conditions.

Table 4.1.2-1
Materials for Fuel Channel Pressure-Retaining Components

Item	Material
Pressure Tube	Cold-worked Zr-2.5 wt% Nb alloy (comply in general with Alloy R60901 in CSA Standards CAN/CSA-N285.6.1 and N285.6.7
End Fitting	Modified Type 403 stainless steel to the requirement of CSA Standard CAN/CSA-N285.6.8
Channel Closure components including housings, seal disc, jaws, and spider	SA564, Type 631
Feeder Connection flanged elbow	Type 403 stainless steel casting (ASME SA-487 CA6NM)
Feeder Connection cap screws	Inconel (ASME SB637, Grade UNS- No7718)

4.1.3 Reactivity Control Units

Reactivity control units (RCU) include the in-reactor sensor and actuation portions of the reactor regulating and shutdown systems. The layout of the reactivity mechanisms deck and the horizontal reactivity control units are shown in Figure 4.1-3. Reactivity control units include neutron flux measuring devices (self-powered flux detectors, fission chambers and ion chamber units), power regulating devices (zone control units and control absorber units) and shutdown devices (shutoff units for shutdown system 1 [SDS1] and a liquid gadolinium injection system for shutdown system 2 [SDS2]). The reactivity worth of these devices are shown in Table 4.3-5.

The reactor shutdown systems are independent of one another and of the reactor regulating system (RRS). All reactivity mechanisms, which operate in the low temperature, low pressure moderator environment, are simple, rugged, require little maintenance, and are highly reliable.

The reactivity mechanisms for the RRS and for SDS1 are installed vertically through the reactivity mechanisms deck. The reactivity mechanisms for SDS2 are installed horizontally through the calandria vault wall.

4.1.3.1 Design Bases

4.1.3.1.1 Design Philosophy

The reactivity control units of the CANDU reactors fall into two main categories:

- Assemblies with working parts which can alter the reactivity and hence the power output of the reactor,
- Assemblies which serve as mountings for reactor control and indication instrumentation.

The most important aspect of all the units is reliability, and great care is taken in the selection of materials, the design of moving parts, the laboratory test programs, and final installation at site.

The design of each assembly is carefully studied for radiation shielding and streaming so that the parts external to the reactor can be safely approached and maintained as required.

Stresses due to movements caused by temperature changes, earthquakes, etc., are maintained at safe levels under all conditions by suitable design features.

Particular attention is paid in the use of materials and design to avoid corrosion of all kinds, including crevice corrosion.

Because reliability is of such importance for control mechanisms, a high level of quality control is warranted. Although some parts of the reactivity control units can be replaced, it is more economical to institute a high level of quality assurance and benefit from the resulting longer life, reduced exposure to workers, and lessened unavailability.

4.1.3.1.2 Reactivity Mechanism Deck

The reactivity mechanisms deck closes off the top of the calandria vault. It must also provide support and access to the vertical reactivity control units for maintenance.

Other requirements:

- Provide lateral support for the vertical reactivity control units,
- Provide required shielding for the equipment and services above the deck,
- Provide biological shielding for maintenance,
- Provide support and protection against mechanical damage for the electrical cables and process piping which serve the vertical reactivity control units,
- Provide support for the RCU maintenance flask and other flasking equipment when required,
- Provide access for limited inspection of the components in the calandria, and
- Provide access into the calandria for startup instrumentation.

4.1.3.1.3 Reactivity Control Units

The reactivity control units provide reactivity sensing and control functions during normal operating and upset conditions. The horizontal and vertical flux detector units (HFD and VFD), ion chamber units (IC) and fission chambers (FCBR) provide the sensing capability, supplying signals to the RRS, SDS1 and SDS2 control systems. The zone control units (ZCU) and control absorber units (CA) respond to control system inputs by moving neutron-absorbing materials into and out of the reactor to maintain power at the desired level. The shutoff rods (SORs) and liquid injection shutdown system (LISS) respond to control system inputs by inserting neutron-absorbing materials into the reactor to shut down the reactor.

Access to the reactor for these reactivity control units is provided by thimbles. These are cylindrical tubes extending from the calandria shell, either up through the reactivity mechanisms deck for the vertically oriented RCUs or horizontally through the calandria vault wall for the horizontally oriented RCUs.

4.1.3.2 Component Description

The locations of the reactivity control units (RCUs) are shown in Figure 4.1-3.

4.1.3.2.1 Reactivity Mechanisms Deck

The reactivity mechanisms deck closes the top of the calandria vault and provides a mounting area for the reactivity control units and shielding for maintenance personnel.

The deck is a concrete-filled, closed steel box structure, internally stiffened with bi-directional webs, and penetrated by the inserts for the thimbles of the vertical reactivity control units. A

removable heavy tread plate is supported above the structure to provide a protected free space for cabling and services to the control units, while leaving an uncluttered walkway above for maintenance access. The tread plate also provides added shielding for personnel on the reactivity mechanism deck.

The reactivity mechanisms deck structure is fabricated from structural grade carbon steel. Below the services space, the spaces between the internal webs and reactivity control unit inserts are filled with concrete for biological shielding.

The structure is joined to the vault through a skirt-like web, which transmits all loads, maintains correct location, and minimizes restraint loads due to differential thermal expansion. Datum bosses allow the reactivity mechanisms deck to be precisely aligned with the calandria at installation to ensure that the guides for the absorbers and flux detectors can pass comfortably between the calandria tubes to their locators in the bottom of the calandria.

One view port is installed in the reactivity mechanism deck. It is comprised of a capped shutoff rod type thimble and provides for the insertion of inspection and monitoring equipment, and startup instrumentation into the reactor core.

Figure 4.1-3 shows the plan views of the reactivity mechanism deck. Figure 4.1-3 shows the general configuration of the vertical reactivity control units.

4.1.3.2.2 Reactivity Control Units Absorber Guides

To allow free vertical movement of the various reactivity control unit absorber elements, but ensure that they stay in the correct horizontal position and orientation, absorber guide assemblies are provided for each device. Each assembly consists of two main segments. For both segments, the internal profile is shaped to allow free passage of its absorber element vertically but closely control horizontal movement. The connection between the upper and lower segments is configured to prevent any impediment to insertion or withdrawal of the absorber it guides. Straightness is carefully controlled through the selection of manufacturing processes that manage residual stresses and maintain proper alignment during assembly, by using handling procedures during shipping and installation. At installation, an axial load is applied to the guide assembly by a helical compression spring to minimize any bowing and to reduce the amplitude of any vibration that may occur in the guide.

The lower segment, which resides in and spans the calandria vertically, has a hollow rectangular cross-section and is fabricated from zirconium alloy for strength, corrosion resistance and good neutron economy. Large open areas in the sides of the guide perpendicular to moderator flow provide for unimpeded flow through and around the guides and minimize the parasitic loss of neutrons to the guides. Its bottom is anchored to the bottom of the calandria through a self-aligning locator assembly. Each locator assembly is precisely located and welded to a bracket in the bottom of the calandria to ensure proper alignment and positioning of the guide to which it is attached.

The upper segment, which resides in the thimble above the calandria, is connected to the top of the lower portion and extends upwards to the top of its thimble. It is fabricated from austenitic stainless steel for strength and corrosion resistance. The top and bottom of the upper segment reside in sleeve bushings that have been precisely located to ensure proper alignment of the guide assembly.

4.1.3.2.3 Reactivity Control Units Thimbles

Each reactivity control unit has a thimble which extends from the calandria shell to an access point either on the reactivity mechanisms deck for vertical reactivity control units or on the outside of the reactor vault wall for the horizontal reactivity control units. In addition to these thimbles, each zone control unit also has a lower thimble running off the bottom of the calandria, aligned with that zone control unit's upper thimble to provide a space to withdraw the lower ZCU absorber element when it is not required in-core. These thimbles are extensions of the moderator system pressure boundary.

The lower portion of each vertical thimble is filled with liquid heavy water. Above the liquid surface, the atmosphere inside the vertical thimbles is helium saturated with heavy water vapour. Each vertically oriented thimble connected to the top of the calandria has two connections to the moderator cover gas system arranged to provide forced circulation of this cover gas. The horizontal thimbles and the lower zone control unit thimbles are filled with heavy water. The outsides of all thimbles are surrounded by demineralized light water for shielding.

The thimbles are fabricated from austenitic stainless steel. Type 304L stainless steel was chosen because it is well suited to the environmental conditions and its low carbon content, which improves its amenability to welding.

The loads carried by the thimbles arise from the weight or dynamic forces generated by the operation of internal components, internal and external pressures, thermal stresses, earthquake loads and distortions of the calandria and reactivity mechanisms deck structures. Conservative design ensures that the resulting stresses are low.

Each thimble has a flexible bellows joining the top of the thimbles to its insert in the reactivity mechanisms deck, sealing the calandria vault shield water from the steam generator room atmosphere and allowing axial movement of the thimble due to differential thermal expansion.

Nested steps and internal shield plugs attenuate line-of-sight radiation along the thimbles, allowing limited access to the reactivity mechanisms deck and the liquid injection shutdown system equipment room.

4.1.3.2.4 Shutoff Units

Twenty-four vertical shutoff units are provided, each comprised of a shutoff rod (rectangular absorber element), a vertical guide assembly, and a drive mechanism. A typical shutoff unit is illustrated in Figure 4.1-4.

The shutoff units are safety devices that provide for the rapid termination of reactor operation under emergency conditions. Shutdown is achieved by rapidly inserting boron carbide shutoff rods into the reactor core. This action is initiated automatically by the SDS1 control logic or by direct operator input. Insertion of the shutoff rods is ensured by a combination of gravity acting on the vertically oriented shutoff rods and an electromagnetic clutch in the drive mechanism that releases on loss of electrical power.

The shutoff rod consists of a rectangular cross-section tube fabricated from austenitic stainless steel. The tube is filled with sintered boron carbide blocks, which act as the neutron-absorbing agent. The top and bottom of the tube has plugs that are welded in place after installation of the boron carbide blocks. A connection is provided at the top of the shutoff rod for the attachment of the multi-strand wire rope that it is supported by.

The drive mechanism caps the top of the shutoff unit thimble and supports and positions the shutoff rod vertically. The wire rope connecting it to the shutoff rod is wound onto a sheave inside the drive mechanism. The sheave is driven by an electric motor through a self-locking gear train and an electromagnetic clutch, allowing the shutoff rod to be moved up and down on command. Internal mechanical stops prevent absorber movement outside the envelope defining the poised and fully inserted positions. An internal hydraulic damper slows and stops the shutoff rod at its fully inserted position. Vertical position is sensed by a multi-turn resolver connected to the sheave drive shaft. Absorber availability for insertion is verified by a separate circuit that detects the top of the shutoff rod when it reaches its poised position. The portions of the drive mechanism housing the sheave and capping the thimble form part of the moderator system pressure boundary and must retain the integrity of that boundary under all expected normal, upset and accident conditions.

On command from the SDS1 control logic or the plant operator, the circuit supplying power to the electromagnetic clutch is opened. The clutch disengages, allowing the shutoff rod to drop into the reactor by gravity. The shutoff units are required to function during all expected normal, upset and accident conditions. When the reactor trip signal is cleared, the electromagnetic clutches are re-energized, allowing the shutoff rods to be withdrawn from the reactor.

4.1.3.2.5 Zone Control Units

There are nine zone control units (ZCUs) with one absorber unit in each of the upper and lower halves of the reactor.. The reactor is divided into 18 zones, 9 each in the upper and lower halves of the reactor. The units are arranged symmetrically in the reactor in three rows of three, with the middle row located on the reactor's axial centreline. (See Figure 4.1-3). An independently controlled absorber element is assigned to each zone for local power regulation. Control of local and bulk power is accomplished by adjusting the position of each absorber element in its assigned zone under the control of the reactor regulating system computer. Each zone control unit covers two zones and consists of two absorber elements suspended by wire ropes, a vertically oriented guide shared by the two absorber elements, and a drive mechanism to support and position the absorber element.

The absorber elements are rectangular in cross-section. A connection is provided at the top of each absorber element for the attachment of the multi-strand wire rope that it is supported by.

The upper and in-core portions of the absorber guide assembly is similar to that described in Section 4.1.3.2.2 with the following exceptions. First, each absorber guide can accommodate two independently controlled absorber elements in parallel guide ways. Second, the bottom of each guide extends down into a thimble running off the bottom of the calandria to provide a place for the lower absorber element to be withdrawn to when not needed in the reactor.

The drive mechanism provides for independent control of each of the two absorber elements it supports in a common housing. It caps the top of the upper zone control unit thimble and supports and positions its absorber elements vertically. The wire ropes connecting it to the absorber elements are wound onto a pair of sheaves inside the drive mechanism. Each sheave is independently driven by an electric motor through a self-locking gear train, allowing the absorber elements to be moved up and down on command. Internal mechanical stops prevent absorber movement outside the envelope defining the fully withdrawn and fully inserted positions. Vertical position is sensed by a multi-turn resolver connected to each sheave's drive shaft. The portions of the drive mechanism housing the sheave and capping the thimble form part of the moderator system pressure boundary and must retain the integrity of that boundary under all expected normal, upset and accident conditions.

4.1.3.2.6 Control Absorber Units

Eight control absorbers (CAs) are mounted vertically and adjust the flux level at times when greater reactivity rate or depth is required than that provided by the zone control system. The design is essentially the same as that of the shutoff units (see Section 4.1.3.2.4), except that there is no absorber availability indicator. Figure 4.1-3 shows the locations of these units.

The operation of the unit is similar to that of the shutoff unit. The absorber elements are normally motored down on command from the RRS computer. They can also be dropped when a rapid reduction in reactivity is required. The motor design allows insertion and withdrawal speeds to be varied within a predetermined range to suit plant needs. A bypass backup supply from the line permits the motoring of the absorber elements at maximum speed.

Operating conditions and design and operating loads are similar to those of the shutoff units.

The materials used in the control absorber units are the same as those used in the shutoff units.

4.1.3.2.7 Flux Detector Units

Several vertical and horizontal in-core flux detector units are installed in the reactor. The vertical flux detector units extend down from the reactivity mechanisms deck into the reactor. The horizontal flux detector units extend through the reactor vault wall in the liquid injection shutdown system equipment room into the reactor.

The vertical flux detector units use platinum clad flux detector elements to provide inputs to SDS1. Other platinum clad flux detector elements in the vertical units provide flux data to the RRS to control the zone control units in each of the eighteen zones. Additionally, a large number of vanadium flux detectors on the vertical units provide inputs to the flux mapping routine. The horizontal flux detector units use platinum clad flux detector elements to provide inputs to SDS1.

The horizontal and vertical flux detector units are comprised of a flux detector assembly, a guide tube assembly (including a guide tube tensioning system), a thimble, and penetration components. This flux detector design is known as hybrid encapsulated straight individually replaceable (HESIR) type. All components in contact with the heavy water moderator and most components that reside in the reactor core are fabricated from zirconium alloy.

The flux detector assembly is comprised of a capsule tube, a bundle of detector well tubes, a shield plug and a connector housing. The detector elements reside in the well tubes, which are tightly bundled to fit within the capsule tube. The tops of the well tubes end in the connector housing, which provides an access point for installing the individual detector elements and connecting them to feed lines connected to the RRS, SDS1 and SDS2 computers. Well tubes not housing detector elements are filled with appropriately sized shield plugs. The complete detector assembly is assembled, purged, filled with pure helium and sealed at the manufacturer's facility to ensure that the detectors obtain the maximum initial protection against possible corrosion effects due to contamination.

The detector assembly is designed to allow a simple and quick replacement process for individual detector elements should they fail or deteriorate. The housing cover is removed in-situ with the reactor shut down. A spare detector element is inserted quickly into a vacant well and connected in the failed element's place. The cover is then replaced and the assembly is purged with helium from a portable supply, through valves provided on the connector housing. The failed detector remains in place until a subsequent reactor shutdown, when the assembly can be reopened and the radioactive failed element drawn into a shielded flask and removed.

All materials in contact with the heavy water moderator are zirconium alloy.

4.1.3.2.8 Liquid Injection Shutdown Units

These units are part of the shutdown system No. 2 (SDS2), which can quickly terminate reactor operation. This is accomplished by injecting a neutron absorbing liquid ("poison") into the heavy water moderator between the calandria tubes in the calandria. Injection of the liquid into the moderator is initiated by the control logic of the SDS2.

The liquid injection shutdown system (LISS) is comprised of six liquid injection shutdown units, six pressure vessels containing a gadolinium nitrate solution, a helium supply tank, a mixing tank, valves, and piping.

Each liquid injection shutdown unit is comprised of an in-core injection nozzle tube spanning the calandria, an injection pipe connecting the nozzle tube to the LISS piping, a thimble extending from the calandria shell out to the bellows assemblies, a vault wall penetration assembly, heavy

and light water bellows assemblies and a tensioning device. Each unit is connected to a separate pressure vessel containing the gadolinium nitrate solution. The injection nozzle tube is fabricated from zirconium alloy. The bellows plies are fabricated from Inconel 600 or Inconel 625. Most other components are fabricated from 300 series austenitic stainless steel.

Helium is stored under pressure in a single pressure vessel, which is isolated from the pressure vessels containing the gadolinium nitrate solution by two pairs of channelized quick-opening valves. When the valves open in response to a trip signal from SDS2, the helium pressurizes the vessels, forcing the solution through the LISS piping and the injection pipes to the injection nozzle tubes. Holes in the nozzle tubes direct jets of the gadolinium nitrate solution to achieve a rapid dispersion of the solution in the reactor moderator. A solid polyethylene ball inside each pressure vessel acts as a check valve when the solution has been evacuated from the tanks, ensuring that the pressure rise within the calandria does not exceed the relief pressure of the calandria rupture discs. Each pressure vessel supplies one nozzle tube.

The bellows assemblies provide flexible seals for both the heavy water moderator and the calandria vault light water. A separate tensioning device holds the injection nozzle tube in tension to reduce sag. A freeze jacket is an integral part of the bellows assembly, and facilitates repairs to the bellows, conductivity probe, and isolation ball valve.

The bellows ply material is Inconel 600 or Inconel 625. The material of the thimble and other parts of the bellows assembly and the injection tube is type 304L stainless steel. The injection nozzle is zirconium alloy.

4.1.3.2.9 Ion Chamber/Fission Chamber Units

Six lead-shielded housing assemblies are mounted on the outside of the calandria shell, three on each side. Each housing contains three cavities. The three housings on the inaccessible side of the reactor are vertically oriented and are accessible from the reactivity mechanisms deck. The other three housings are horizontally oriented and are accessible from the liquid injection shutdown system equipment room.

Two of the three cavities in each vertically oriented housing contain fission chambers. One provides inputs to the RRS and the other provides inputs to SDS1. The third cavity contains a test shutter unit.

The cavities in each of the three horizontally oriented housings contain one ion chamber and test shutter unit for SDS2. The third cavity in each housing is a spare, available for the start-up instrumentation or backup ion chamber instruments if needed.

A number of different materials are used in the construction of the ion chamber units, each optimized for a particular duty. The main housing and access tubes are fabricated from type 304L stainless steel, while the insert tubes are fabricated from aluminium to ASTM B241 and B209. The shield plugs are also aluminium. The interior of the housing is filled with lead, poured during the manufacturing process.

4.1.3.2.10 View Port

A view port is installed in the reactivity mechanisms deck, providing limited inspection access to the calandria and an alternate location for start-up instrumentation. It is similar to the shutoff unit thimbles, but contains only a shield plug and a cap. An absorber guide locator is mounted on the calandria shell below the view port to provide a lower anchor point if required by any inspection tools.

Table 4.1-1
Reactor Assembly Major Characteristics

Characteristics	Data
No. of Channels	292
Fuel Bundles Per Channel	12
Shutdown System Number 1	24 Shutoff Units
Shutdown System Number 2	6 Nozzles
Pressure Tube Material	Zr-2.5Nb alloy
Calandria Assembly Material	SS Type 304L
Calandria Tube Material	Zirconium alloy Grade R60804
Core Length	5.94 m
Calandria Main Shell Inside Dia.	5.2 m
Temperature at the Fuel Channel Inlet	280°C
Temperature at the Fuel Channel Outlet	328°C
Pressure at the Fuel Channel Inlet	13.2 MPa (g)
Pressure at the Fuel Channel Outlet	12.3 MPa (g)
Operating Life of the Reactor	60 years at 90% capacity factor
Target Design Life of the Pressure Tube	30 years at the reactor's 90% capacity factor (236,500 effective full power hours – EFPH)

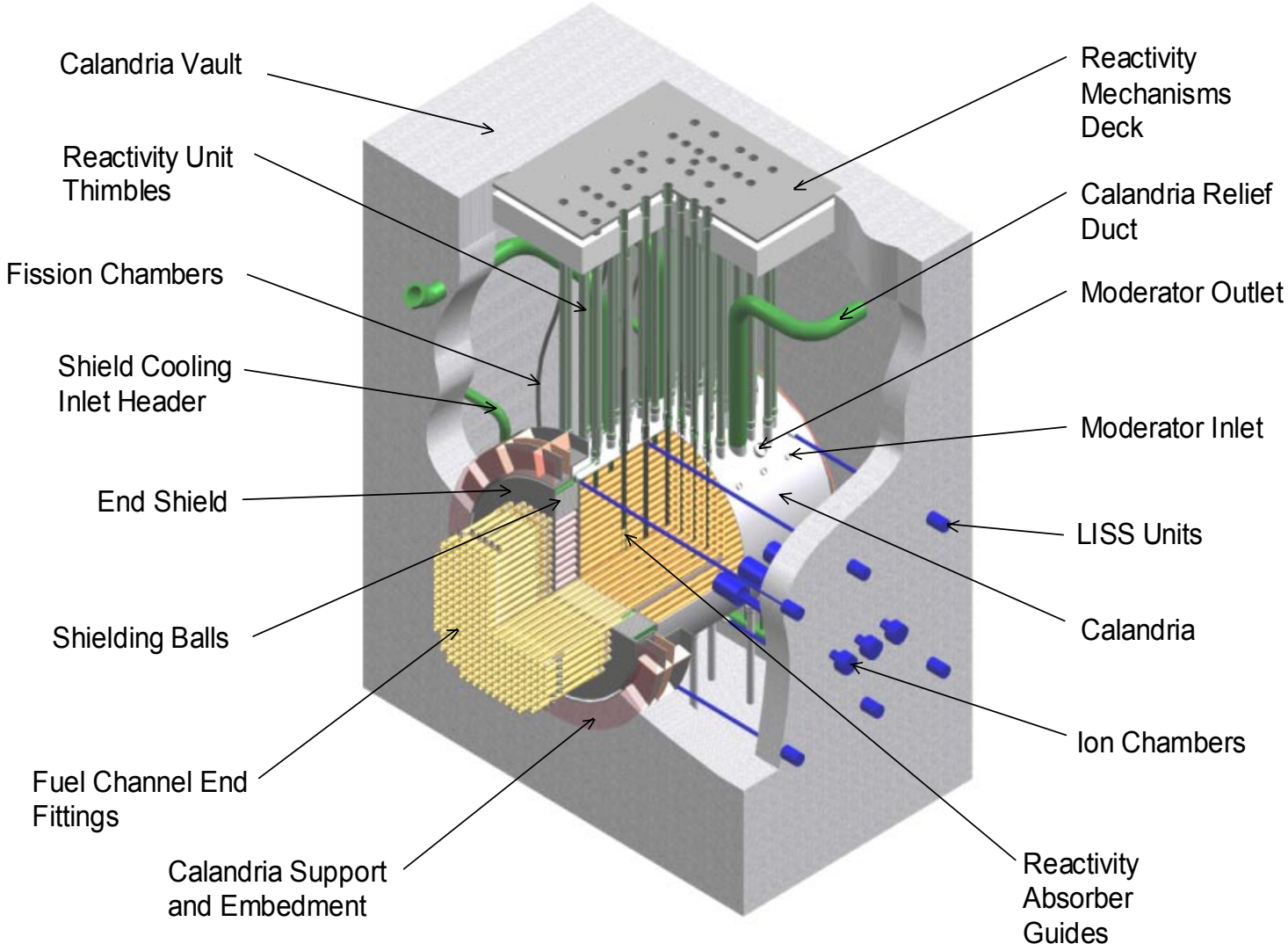

Figure 4.1-1 Reactor Assembly

1. End Fitting
2. Channel Closure
3. Feeder Connection
4. Liner Tube
5. Positioning Assembly Stud
6. Fuel Support Plug
7. Pressure Tube
8. Position Assembly Yoke
9. Bellows Attachment Ring
10. Bellows Assembly
11. Fuelling Tubesheet
12. Lattice Tube
13. Calandria Tubesheet
14. Calandria Tube
15. Fuel Bundle
16. Channel Annulus Spacer
17. Inboard Journal Bearing
18. Outboard Journal Bearing
19. Pressure Tube Rolled Joint
20. Shielding Sleeves
21. Channel Closure Seal Insert

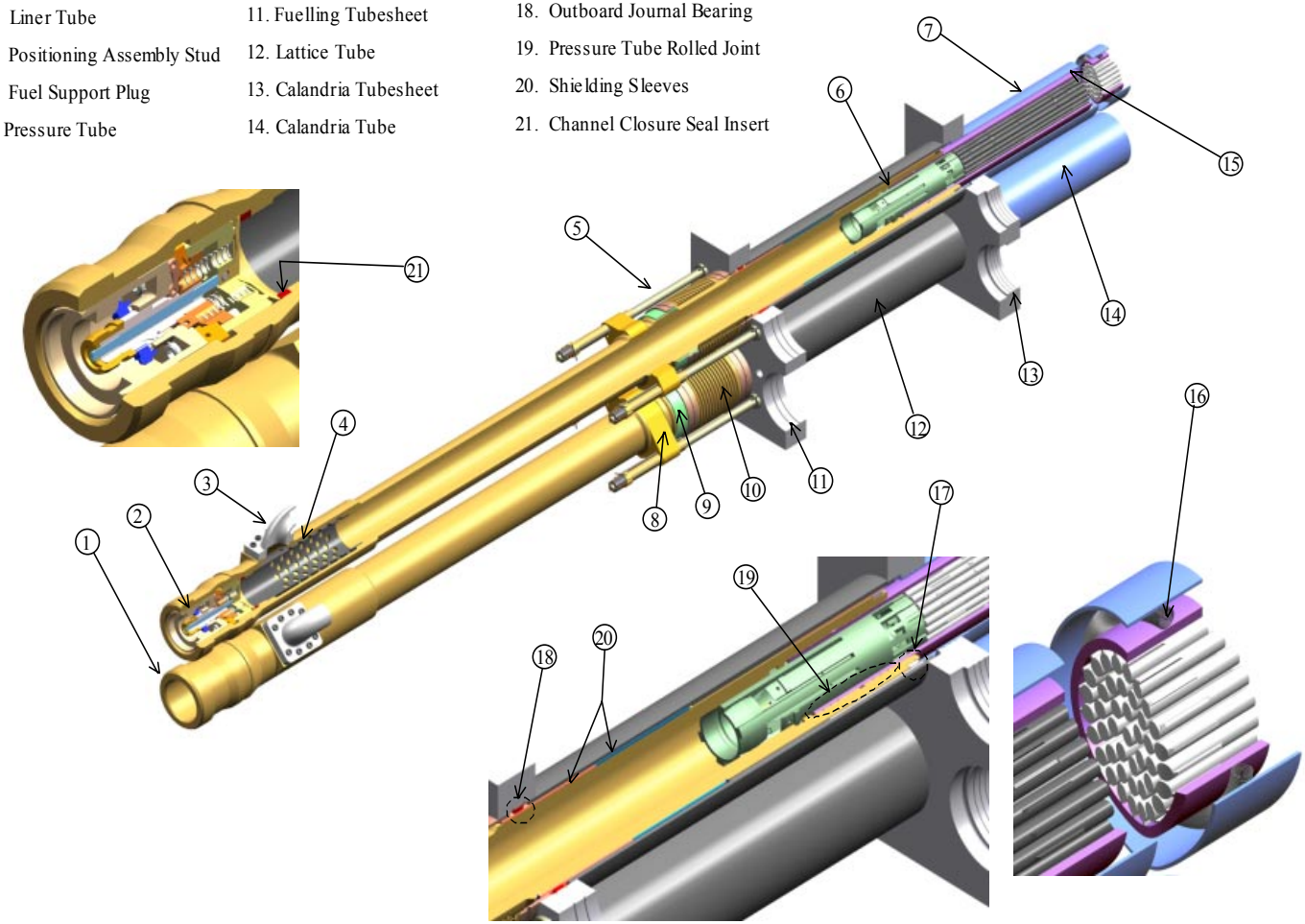

Figure 4.1-2 Fuel Channel Assembly

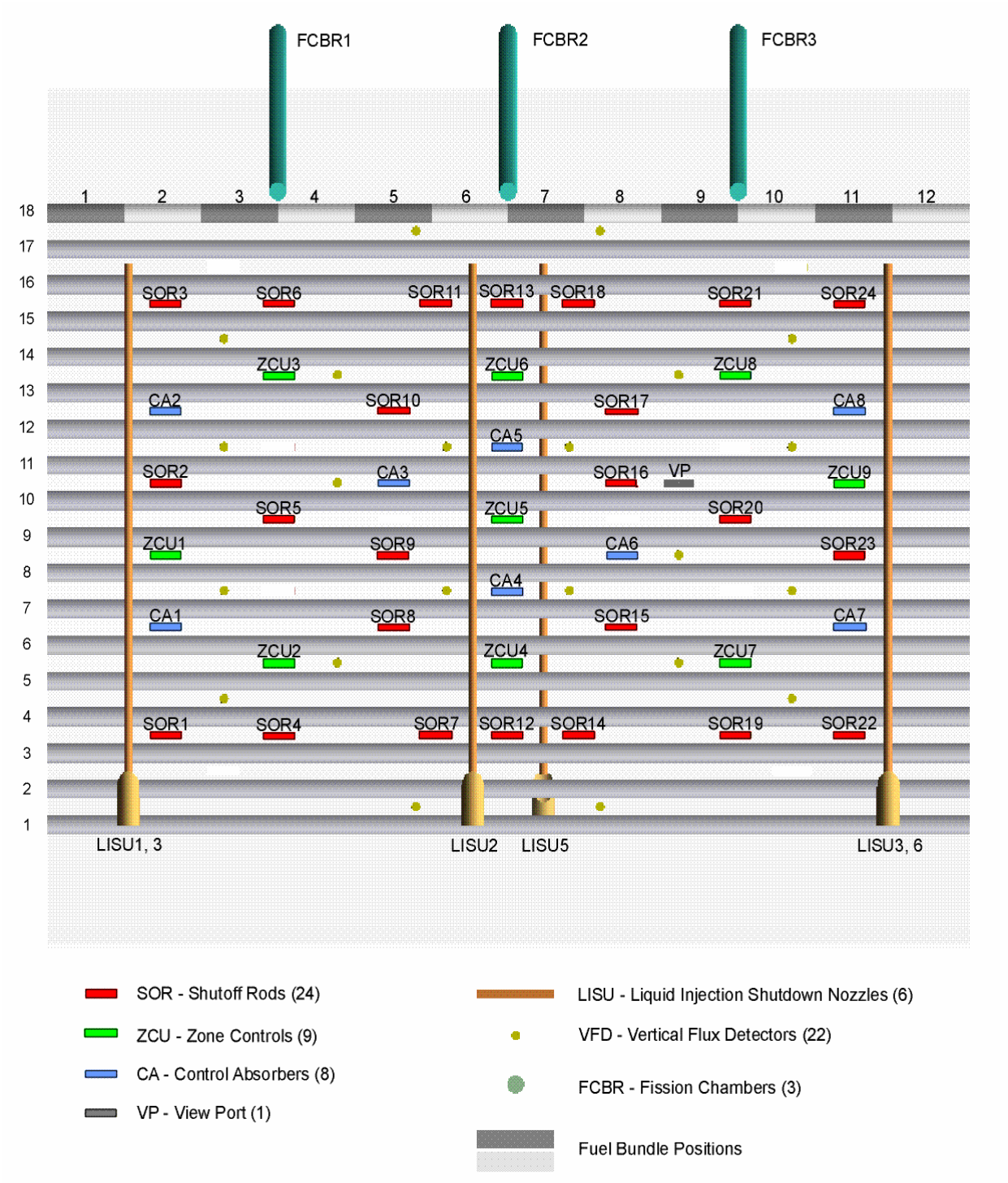

Figure 4.1-3 ACR Reactivity Mechanism Layout

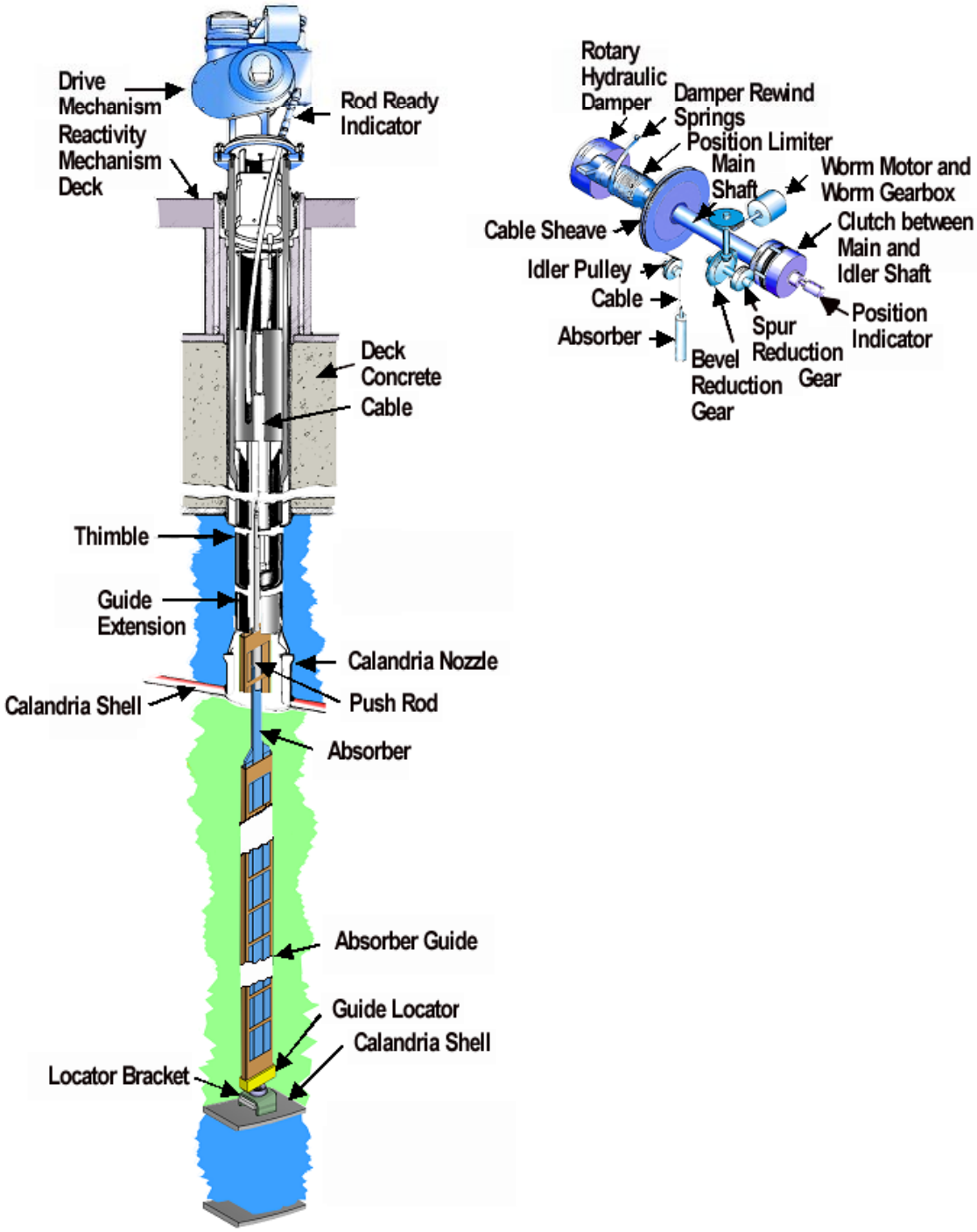

Figure 4.1-4 Shutdown System No. 1 - Shutoff Units

4.2 Fuel Design

The 43-element CANDU 6 CANFLEX Mk 4 fuel bundle forms the basis for the ACR bundle design. The bundle includes 2 different element sizes. The centre and inner ring consist of eight elements with a diameter of 13.5 mm, whereas the outer two rings consist of 35 elements with a smaller diameter of 11.5 mm.

The outer three rings of fuel elements contain enriched uranium pellets with an average enrichment of 2.1 wt% U-235, while the central fuel element contains burnable neutron absorber (dysprosium) in natural uranium. A layer of graphite CANLUB covers the inside surface of all claddings and protects them from systematic fuel failures due to a damage mechanism known as stress corrosion cracking. Endcaps are resistance welded to the cladding extremities to seal the elements. To facilitate leak testing and to improve pellet-to-cladding heat transfer, the void within the fuel elements is filled with unpressurized He/air or He/other inert gas mixture prior to endcap welding.

Endplates are welded to the endcaps to hold the elements in a stable bundle configuration. Inter-element spacers are brazed to the adjacent elements at their mid-planes to maintain the desired minimum inter-element separation. Buttons are brazed to the elements at two planes, each one-quarter length from the end, to promote local flow turbulence and mixing of coolant between sub-channels in the bundle. Bearing pads are brazed to the outer elements, at the mid-plane and near the ends, to support the bundle in the fuel channel. The fuel claddings, endcaps, endplates and appendages are made of Zircaloy-4 because of its excellent nuclear characteristics of low neutron absorption, good corrosion resistance and low hydrogen/deuterium pickup.

4.2.1 Design Bases

The fuel bundle is designed to meet the operating conditions imposed on it by the heat transport system, the fuel handling system, the fuel channel design, the reactor nuclear design, and seismic loads. The fuel bundle is designed to satisfy the following design bases:

a) The fuel transfers its heat to the coolant without experiencing dryout under normal operating conditions.

b) The fuel bundle will maintain sufficient clearances between the fuel cladding and the pressure tube during normal operation.

c) The bundles accommodate fuel expansions due to irradiation and pressure-tube sag and creep.

d) The bundles withstand impact loads during the refuelling operation when the coolant flow sweeps new bundles downstream, causing them to strike the stationary bundles.

e) The fuel bundle inside the pressure tube can withstand the combined axial loads caused by the coolant hydraulic drag and fuelling-machine rams.

f) The endplates hold the fuel elements together in the required bundle configuration and must be sufficiently strong and flexible to allow differential axial expansion of the elements in the

bundle. The endplates and endcaps can withstand the drag and fatigue loads imposed by the coolant and the fuel handling system.

g) The endplates are as thin as possible, to minimize neutron absorption and to minimize the gap between the UO_2 in adjacent bundles; the bundles must withstand the resultant end flux peaking that occurs at the ends of the stack of fuel pellets.

h) The fuel bundles can withstand power changes caused by refuelling and by reactivity control device movements.

i) In the event of an earthquake the fuel bundles maintain a coolable geometry, and will not jeopardize the integrity of the heat transport system during a design basis earthquake at the reactor site.

4.2.2 Design Description

The ACR-700 fuel bundle design is based on the CANDU 6 CANFLEX Mk-4 NU fuel bundle design, with the following design features:

4.2.2.1 Addition of Burnable Neutron Absorber

To reduce the coolant void reactivity during postulated accidents, dysprosium is added as a burnable neutron absorber to the centre fuel element of the bundle.

4.2.2.2 Uranium Enrichment

To operate at extended burnup conditions and to compensate for the loss of reactivity due to the use of burnable absorber material in the centre fuel element, an average enrichment of 2.1 wt % U-235 in total U is used for fuel pellets in the fuel elements of the inner, intermediate and outer rings.

4.2.2.3 Fuel Elements with Increased Internal Voidage

To accommodate the fission gases released at high burnup, the internal void spaces in the fuel elements located in the outer two rings of elements are more than those of the CANDU 6 CANFLEX Mk-4 bundle. The extra voidage is achieved through shorter pellets, deep end dishes, and larger chamfers.

4.2.2.4 Bearing Pad Arrangement

The 3 planes of bearing pads on an ACR bundle are higher and longer than those on the CANDU 6 CANFLEX Mk-4 bundle. The height is increased to provide additional CHF margin gains. The pad length is increased to provide bridging support for the circumferential groove in the endfitting.

4.2.2.5 Flat Endcaps

The endcaps of all fuel elements have a square profile, similar to those in other operating CANDU reactors. The flat endcaps are designed to permit compatibility between the outer fuel elements of the ACR bundle and the fuel separators.

4.2.2.6 Endplate Orientation

To minimize the sideway bowing of the outer elements observed on the CANFLEX Mk 4 bundles irradiated at Point Lepreau NGS, the endplate to element orientation is the same at both ends of the bundle.

4.2.3 Fuel Management

The two bundle shift is the reference fuelling scheme for ACR. One fuelling machine unloads two irradiated bundles from the downstream end of the channel while the other inserts two new bundles.

Another important feature of ACR is that defected fuel can be removed after suspect channels are identified, by refuelling on-power. Provided the gamma activity levels in the coolant remain below the shutdown limits and fuel defects can be located and removed on-power, these defects should not have any effect on the station capacity factor.

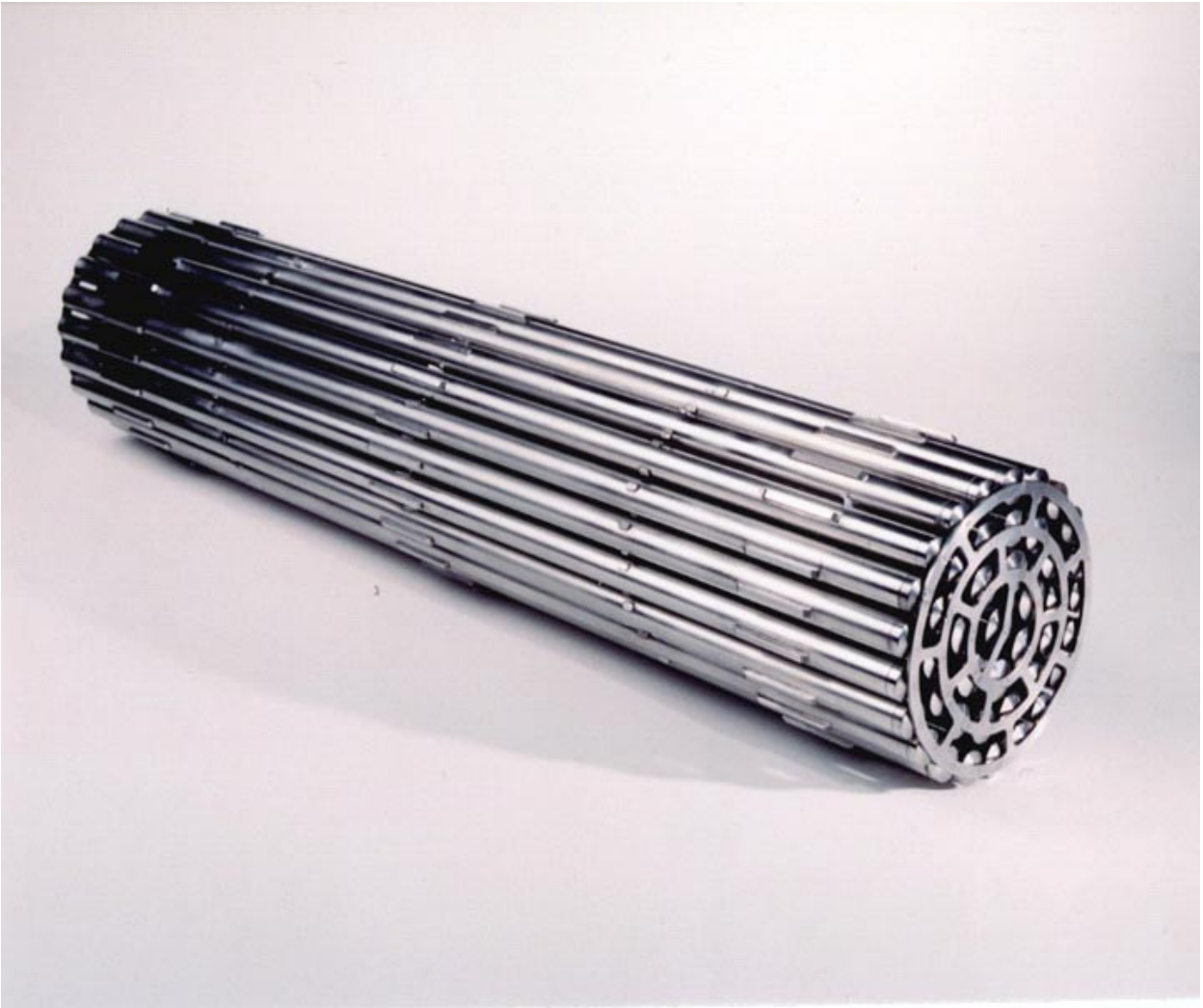

Figure 4.2-1 CANFLEX Fuel Bundle

4.3 Nuclear Design

4.3.1 Design Bases

The bases for the nuclear design and the neutronic features of the Advanced CANDU Reactor (ACR) lattices and core design are described in the following subsections. Furthermore, the influence of the neutronics on regulating and shutdown systems designed to meet requirements set for the normal and abnormal (accident) conditions is discussed.

4.3.1.1 Coolant Void Reactivity and Fuel Burnup

4.3.1.1.1 Design Bases

The ACR uses D_2O moderator, H_2O coolant, and slightly enriched uranium (SEU) fuel in CANFLEX fuel bundles. The central element is natural uranium (NU) mixed with burnable neutron absorber (dysprosium). The remaining 42 fuel elements contain SEU fuel withan average enrichment of 2.1 wt% of U-235. The inside diameter of the ACR pressure tube is the same as that used in the CANDU 6 design, but the thickness has been increased from the CANDU 6 value of 4.5 mm to 6.5 mm. The thicker pressure tube enables the ACR to achieve higher thermal/electric conversion efficiency by operating at higher coolant temperature and pressure. The calandria tube in the ACR is 2.5 mm thick with an outside diameter of 156 mm. This large calandria tube is designed to further reduce the amount of D_2O moderator between the fuel channels, which are arranged in a compact square lattice pitch of 220 mm.

4.3.1.1.2 Discussion

A CANDU reactor with H_2O coolant would have a high positive coolant-void reactivity (CVR) at the CANDU 6 lattice pitch of 286 mm. The key parameter that determines the coolant-void reactivity is the moderator-to-fuel volume ratio in the lattice cell. For the purpose of this discussion, moderator is defined as the D_2O between the fuel channels and coolant is the heat-removal medium inside the fuel channels. The CANDU 6 reactor lattice has a large moderator-to-fuel ratio of 16.4:1, resulting in a well-moderated lattice that is optimized for the natural uranium fuel cycle. An effective way of reducing the coolant-void reactivity, for a CANDU reactor using H_2O coolant and SEU fuel, is to reduce the lattice pitch until an under-moderated lattice condition is reached. The lattice becomes under-moderated when the D_2O moderator volume alone cannot provide sufficient moderation to achieve maximum reactivity. The H_2O inside the fuel channel then functions as both coolant and moderator. Coolant-void reactivity is determined by the net result due to the loss of absorption (a positive reactivity change) and the loss of moderation (a negative reactivity change). Spatial and spectral changes of the neutron flux in the lattice cell due to voiding of the coolant, as well as the nuclide composition in the fuel, also affect the coolant-void reactivity.

The space requirements between feeders in adjacent fuel channels in a CANDU reactor determine the minimum lattice pitch that is permissible. A detailed engineering assessment

recommended a minimum lattice pitch of 220 mm and a maximum calandria tube outside radius of 78 mm. However, the moderator-to-fuel volume ratio is about 7.1.

Using a small quantity of burnable absorber in the central element of a CANDU fuel bundle can further reduce the coolant-void reactivity. There is an increase in the thermal neutron flux towards the centre of the fuel bundle upon voiding of the coolant. Depending on the amount of burnable absorber incorporated in the central fuel element, this increase in neutron absorption could generate a negative reactivity component strong enough to reduce the overall coolant-void reactivity from a slightly positive value to a slightly negative value.

In order to meet licensing requirements in some national jurisdictions, the ACR has been designed with a negative full-core void reactivity.

The CVR has been calculated for the ACR using widely accepted tools (WIMS, RFSP, MCNP) validated against a large range of experiments in a heavy-water moderated channel geometry. This is considered to be sufficiently negative that the coolant void reactivity is negative when all of the uncertainties are taken into account.

An experimental program is underway at AECL Chalk River Laboratories which will measure CVR in the ZED-2 reactor, in an ACR geometry with CANFLEX fuel. The results from the experiments are expected to reduce the size of the uncertainty in code predictions, and to enable a reduction in the uncertainty allowance in the ACR design. Such a reduction can be achieved by small changes to the enrichment, the dysprosium content or both. Since the changes would be small, and since the plant behaviour is insensitive to CVR, there would be little change in safety characteristics.

The reference ACR fuel design uses an average enrichment of 2.1 wt% U-235 fuel in 42 of the fuel elements, with the central element containing NU mixed with burnable neutron absorber (dysprosium). This fuel design gives a core-averaged discharge burnup of about 20.5 MWd/kgU. The geometrical specifications of the CANFLEX fuel bundle for lattice-cell calculations are presented in Table 4.3-1. The design data of the fuel channel is presented in Table 4.3-2, while Table 4.3-3 gives the design data for the ACR fuel. Dysprosium is the best candidate to use as burnable absorber in the ACR fuel because its burnout rate is most compatible with that of U-235. Also, its chemical and physical properties are similar to those of gadolinium, which is widely used as a burnable absorber in LWR fuel.

There are two main causes of using a burnable absorber for coolant-void reactivity reduction:

1. Higher fuel enrichment is required to overcome the parasitic load of the absorber, which also increases the fuel-fabrication cost, and
2. The relative power in the central element that contains neutron absorber is reduced; however, the contribution of the central element to the total power production in the bundle is small, and.

The fuel enrichment and the burnable absorber concentration can be tailored to meet the design targets of fuel burnup and coolant-void reactivity.

Figure 4.3-1 shows the dimensions of the lattice pitch (LP), pressure tube (PT), calandria tube (CT), and the moderator-to-fuel volume ratio (VM/VF) in NU CANDU and ACR lattices. The small ACR lattice results in a highly compact reactor core. The savings in D_2O cost is clearly demonstrated in Figure 4.3-2, which compares the size of this compact ACR core with those for other CANDU designs. The reference ACR-700 core has 292 fuel channels inside a 5.20 m diameter calandria shell. This is much smaller than the 7.6-metre-diameter calandria shell that is required to accommodate 380 fuel channels in the current NU CANDU 6 reactor. The ACR-700 core characteristics are presented in Table 4.3-4.

The slightly negative coolant-void reactivity results in moderately negative power feedback, enhanced core stability, and other benign neutronic characteristics.

4.3.1.2 Flux and Power Distribution Control

4.3.1.2.1 Design Bases

The control of the neutron flux distribution by the action of the reactor regulating system (RRS) in the short-term and by on-power refuelling to adjust the reactivity distribution in the long-term is an effective method of shaping the power distribution in the core and thereby maintaining the rated power output without violating channel and bundle power limits.

4.3.1.2.2 Discussion

Primary control of the neutron flux distribution is carried out by the RRS. Long-term neutron flux shaping is carried out by distributing the reactivity available for fuel burnup judiciously over the core. This is achieved by controlling the fuel residence time as the fuel is progressively irradiated at different locations in the core. On-line monitoring of the neutron flux shape, together with off-line calculations, is used in support of the fuel management.

The bundle and channel powers in the reactor core will be constantly tracked, both by the reactor regulating program in the station computers and off-line by physics calculations. The on-line flux-mapping program produces an approximate channel power map every 2 minutes. The more accurate power-mapping physics calculations will be executed several times a week and will be used to demonstrate compliance with the channel and bundle power limits.

4.3.1.3 Reactivity Feedback and Coefficients

4.3.1.3.1 Design Bases

The two major components of reactivity feedback associated with a small increase in reactor power level are the coolant density coefficient and the fuel temperature coefficient of reactivity. Both of these coefficients of reactivity in the ACR are negative, resulting in negative power coefficients at all operating power levels.

4.3.1.3.2 Discussion

Table 4.3-5 summarizes the major reactivity effects in the ACR-700 core, based on lattice-cell calculations at mid-burnup. All the temperature reactivity feedback coefficients, including coolant, fuel, and moderator, are negative in the ACR at all operating power levels.

The reactivity change due to an increase in reactor power is the combined effect due to the increase in coolant temperature and the increase in fuel temperature. The reactivities were calculated for the mid-burnup fuel lattice using core-averaged fuel and coolant temperatures for the various power levels. The reactivity change from 0% power to 100% power in ACR is estimated to be about -8.0 mk. Between 95% and 105% power levels, the power coefficient is about -0.07 mk/% full power. The magnitude of the negative power coefficient is sufficient to guarantee smooth power control during normal reactor operation, but it is not strong enough to interfere with the reactor control system.

4.3.1.4 Maximum Controlled Reactivity Insertion Rate

4.3.1.4.1 Design Bases

The RRS device mechanisms are designed to limit the reactivity insertion rate to a level required for control of reactivity perturbations and for power manoeuvring. The design of the reactivity devices and the low pressure operating environment in the moderator, rules out the high speed absorber element ejection scenario from consideration. The maximum possible rate of positive reactivity insertion by the RRS devices leads to transients which can be terminated by either shutdown system before the specified acceptable fuel design limits are exceeded. The ACR is designed to compensate for xenon transients to enable power manoeuvring between 100% full power and 75% full power.

4.3.1.4.2 Discussion

The major reactivity perturbations during reactor operation are as follows:

- The change in zone controller insertion in the core to compensate for reactivity insertion during on-power fuelling.
- The change in zone controller insertions to maintain the neutron flux shape during on-power fuelling.
- The change in zone controller insertions during xenon override following a reactor shutdown, during operation in the absence of refuelling capability, or during power manoeuvring to follow a load demand or cycle.
- The change in zone controller insertions and control absorber element movement during a power setback or following a power stepback or during an approach to rated power following a xenon poison out.
- The addition or removal of moderator poison during periods of operation without refuelling.

All zone controller movements are carried out to maintain criticality or to provide sufficient reactivity imbalance to produce the desired power manoeuvring rate. However, during a malfunction of the RRS, it can be postulated that reactivity devices may move to insert positive reactivity into the reactor core at the rate corresponding to their mechanical design limit. The maximum possible positive insertion rate is no higher than 0.5 mk/s. Such a transient is terminated by either one of the two Reactor Shutdown Systems before any damage to the fuel or the internals of the reactor can occur.

Reactivity insertion rate due to moderator boron removal by manual operator action is dependent on the current poison concentration. The half-time of the poison concentration removal is approximately 6-10 hours, and each ppm of boron removed will increase the system reactivity by approximately 2.1 mk.

4.3.1.5 Shutdown Margins

4.3.1.5.1 Design Bases

Sufficient negative reactivity margin to shut down the reactor under all reactor conditions, including the condition of maximum excess reactivity, is provided independently, by each of the two shutdown systems (SDS). In the case of SDS1, negative reactivity margin is provided with the two most effective of the 24 shutoff units not available. The assumption is that one SOR is unavailable due to maintenance and the second does not fall due to malfunction. For SDS2, negative reactivity margin is provided with one out of 6 poison tanks not available. Furthermore, the speed of detection of the onset of postulated accidents such as loss-of-coolant accidents (LOCA) and the speed of negative reactivity insertion by each of the two SDS is such that the power transient is terminated and the reactor brought to a shutdown state without excessive fuel damage or pressure boundary failure.

4.3.1.5.2 Discussion

In each reactor unit there are two shutdown systems that are physically and functionally independent of the RRS and of one another. The reactivity depth of each SDS should be sufficient to shut down the reactor in the absence of:

- All fission products in the fuel.
- All negative reactivity feedbacks.
- All RRS devices.

The above criteria apply at any time during reactor life and encompass all situations at operating power, the hot standby shutdown condition, and the cold shutdown condition. If the depth of an SDS is insufficient to keep the reactor at the guaranteed shutdown state indefinitely, it must have enough depth to keep the reactor shutdown long enough to allow other measures, such as manual addition of boron or gadolinium into the moderator system, to be taken to keep the reactor at the guaranteed shutdown state indefinitely.

In addition to providing sufficient reactivity depth in each of the two SDS, there is provision to add soluble neutron poison (either boron or gadolinium) to ensure a guaranteed shutdown state following re-arming of the SDS. The poison addition can compensate for the most reactive fuel condition and for accidental removal of all reactivity devices.

4.3.1.6 Stability

4.3.1.6.1 Design Bases

The use of enriched fuel, H_2O coolant, and D_2O moderator in the ACR results in a harder spectrum in the fuel than that in the CANDU 6. The prompt neutron lifetime in the ACR is 0.33 ms, which is shorter than the value of 0.9 ms in the CANDU 6, but it is still more than a factor of 10 longer than that in the light water reactors (LWRs) as shown in Figure 4.3-12. This relatively long prompt neutron lifetime, which in combination with a negative power coefficient of reactivity, makes it relatively easy to control the total power and the power distribution. The RRS is capable of preventing oscillations in the reactor power distribution over a wide range of frequencies although such power oscillations are unlikely to occur in the ACR. Should such oscillations occur they are readily detected and suppressed.

4.3.1.6.2 Discussion

There are no de-stabilizing reactivity feedback effects with time constants of the order of the prompt neutron lifetime present. The reactor period resulting from an external reactivity insertion of more than a dollar (total delayed neutron fraction reactivity worth, equivalent to 5.6 mk in the ACR) is characterized by the relatively long prompt neutron lifetime of 0.33 ms and modulated with the negative fuel temperature feedback reactivity which appears without delay due to heating of the fuel.

The response of the reactor to reactivity insertions of less than a dollar is characterized by the relatively long half lives of the delayed photoneutron precursors that make a significant contribution to delayed neutrons by photoneutron production in heavy water. The negative fuel temperature coefficient in the ACR enhances reactor stability.

There are no feedback effects, either neutronic or thermalhydraulic, that contribute to reactor instability with time constants of the order of delayed neutrons.

Xenon-135 reactivity feedback could induce space-dependent instability. The flux shape mode that is susceptible is in the azimuthal and the axial directions. The RRS is designed to control xenon-135 induced instability in the radial reactor planes as well as in the axial direction.

4.3.2 Design Description

4.3.2.1 Nuclear Design Description

The reactor consists of 292 fuel channels arranged on a square pitch of 220 mm. Each fuel channel consists of a zirconium/niobium alloy pressure tube, which is surrounded by a zirconium alloy calandria tube with a gas gap in between (Figure 4.3-3). The pressure tube is separated from the calandria tube by a set of garter springs placed at strategic locations along the channel. The calandria tubes are fixed at each end to the cylindrical calandria. The inside radius of the calandria is 2.60 m, which is large enough to accommodate a heavy water reflector of about 480 mm thickness that surrounds the 292-channel core.

Each channel operates with twelve fuel bundles, which are replaced on-power at a rate that compensates for reactivity loss due to fission product build-up in the core. The ACR-700 requires about 6 new fuel bundles per full power day. This requires fuelling approximately 3 fuel channels using a 2-bundle-shift fuelling scheme.

Tables 4.3-2 and 4.3-3 and 4.3-4 show the nominal design data of the fuel channel, fuel bundle, and core characteristics, respectively.

The on-power refuelling rate of each fuel channel during equilibrium operation is adjusted to maintain criticality of the reactor. The refuelling locations are selected to maintain the desired global flux and power distributions. This makes the average global distribution of fuel burnup essentially invariant over the reactor life. An exception to this occurs during the initial start-up of the plant when the entire core load consists of fresh fuel with the appropriate combination of fuel enrichment level and dysprosium content necessary to achieve criticality and a negative full-core coolant-void reactivity. In addition, soluble boron can be added to the moderator as necessary for further reactivity suppression.

Theoretically, after the initial start-up, the reactor may operate for several months without refuelling, until the excess reactivity and the boron concentration approach zero. In practice, refuelling may commence about 20 full power days (FPD) before the excess reactivity reaches zero. This eases demands on the RRS and avoids excessively high fuelling rates at the onset of fuelling. After refuelling starts, the rate of refuelling approaches the equilibrium value within a few months; however, it takes at least one full-power year before the distribution of burnup in the core reaches an equilibrium or steady state.

4.3.2.2 Power Distribution

The accuracy of the power distribution calculations in the ACR will be confirmed through neutron flux measurement during the commissioning of the ACR plant and through comparisons of measured (by heat balance) and calculated channel powers, and of measured and calculated neutron fluxes at the location of in-core detectors during the operation of the plants.

4.3.2.2.1 General

Power distributions in the form of channel and bundle power maps are calculated using computer codes that simulate the operation and fuel management of the reactor. In addition, the linear heat generation rate (kW/m) of the fuel elements in the core is plotted against their fuel burnup. This is done at regular intervals (as frequently as 3 FPD). These regular snapshots of the core state are used to ensure that the fuel is operating within specified limits.

The power distribution is controlled to prevent any violation of power density and channel power limits when operating at rated power. Several methods of control are used and each is related to a different time scale.

- Eight control absorber units (physically the same as the shutoff units) are used to provide rapid controlled reductions of reactor power.
- The zone control system provides bulk (overall) reactor power level control and spatial control.
- Long term control of power shape is carried out by adjustment of refuelling rate according to channel location.

The fuelling engineer chooses the channel to be refuelled by selecting one of the high-burnup channels in the region he wants to refuel. The burnup of each channel is obtained from a numerical simulation of reactor operation, which produces bundle neutron flux, power, and burnup as a function of reactor history. The information from this simulation identifies the maximum bundle power and maximum channel power in the reactor. The channel burnups are printed out at regular intervals, showing the fuelling engineer at a glance which channels have high burnup, and are therefore possible choices for refuelling. Additional information to aid the fuelling engineer in selecting channels for refuelling is provided by the on-line flux mapping system.

For design calculations the core is divided into several regions radially, with different average burnup in each region. The fuel burnup distribution is adjusted to obtain the desired power shape. These burnup values are maintained by adjustment of the refuelling rate in each burnup zone. A typical grouping of fuel channels into irradiation zones is shown in Figure 4.3-4. The average exit burnup per each irradiation zone is shown in Figure 4.3-5.

4.3.2.2.2 Global Power Distribution

The power distribution in a channel is time-dependent. In the ACR, ^{239}Pu is continuously created from ^{238}U and burnt in situ to produce power. The reactivity gained from the net production of fissile plutonium is insufficient to compensate for the continuous depletion of U-235 and build-up of fission products. Hence, channel power increases immediately as a channel is refuelled, then decreases slowly until the minimum power is reached just before refuelling. Neighbouring channels are also affected, with their power increasing slightly when the channel is refuelled, and decreasing as the local neutron source decreases. Neighbours farther removed produce smaller changes.

Over larger areas of the core, these local effects average out and the mean power distribution remains steady, provided the fuelling rates are adjusted correctly in each region. Without refuelling, power would decrease in the high-power region but increase in the low-power region (as the total reactor power is constant), since burnup proceeds more rapidly in the high-power region.

A time-average channel power distribution for the ACR-700 equilibrium core is shown in Figure 4.3-6. This distribution is calculated assuming, for the fuel at each bundle position, cross sections averaged over the residence time of the fuel bundle at that position using the reference 2-bundle-shift fuelling scheme. In this 2-bundle-shift scheme, 2 fresh fuel bundles from the upstream fuelling machine are pushed into the fuel channel and 2 irradiated bundles are discharged to the spent fuel bay. None of these bundles is recycled or swapped. However, in practice there is at any instant a complete distribution of burnups ranging from zero to discharge values in each region, with corresponding varying cross sections. This results in a power distribution which is not as smooth as the one calculated with time-averaged cross sections. A typical snapshot power distribution for the ACR-700 with channel-to-channel burnup variations shows channel power "ripple" effects of the order of 7% about the time-average values. Recently refuelled channels have highest powers and channels near maximum burnup have lowest powers.

Table 4.3-6 summarizes the characteristics of the core with the typical average channel power distribution shown in Figure 4.3-6. The maximum time-average channel and bundle powers for the ACR-700 are 7.3 MW and 850 kW, respectively. The core-average equilibrium discharge fuel burnup is 20.5 MWd/kgU.

The global power distribution is shaped by differential fuelling in the long term and by differential deployments of the zone controllers in the short term. Figures 4.1-3 and 4.3-7 show the location of the nine zone control assemblies in the ACR-700. Each assembly consists of two independently moveable segments. Hence, there are 18 independently moveable zone controllers, which can be used for both bulk and spatial control in the ACR-700. The length of each zone controller absorber element that is inserted into the core region is adjusted every two seconds and is based on the deviations of neutron flux (obtained by flux detectors over each of the reactor control zones) from a reference neutron flux distribution. The reference neutron flux distribution is the volume-averaged thermal neutron fluxes associated with the region controlled by each zone controller.

4.3.2.2.3 Limiting Power Distribution

The ACR-700 will be equipped with a regional overpower protection (ROP) system to protect the reactor against overpower in the fuel, whether due to a localized peak or as a result of an uncontrolled power excursion due to a loss of reactivity control.

A large number (around 1000) of global power distributions that represent various modes of reactor operation, both normal and off-normal, will be used in the design analysis of the ROP systems. Three-dimensional core calculations will be performed to obtain the power distributions for these possible reactor states and reactivity device configurations. Specifically,

these power distributions are used in the calculations of the critical channel powers and subsequently in shutdown system instrumentation settings for protection against dryout. These large number of analysed power shapes represent the bounds of power distribution so that compliance with the specified acceptable fuel design limits is ensured.

4.3.2.2.4 Power Distribution within Fuel Bundle

In addition to monitoring channel and bundle powers that are inferred from a combination of measurement and calculation, the distribution of power amongst the fuel elements of the bundle is taken into account in setting the limit on bundle power. This is carried out with computer codes that have been validated over the range of conditions that exist during the life of the fuel.

End-flux peaking occurs at the ends of all fuel bundles during normal operation, since the Zircaloy material and H_2O absorb fewer thermal neutrons than UO_2. Flux peaking occurs in only the first few cm of the elements, in a region where the cooling of the fuel is enhanced. Consequently although the flux peaking in that small region may be high, the effect on fuel temperature is small.

4.3.2.2.5 Axial Power Distribution

Axial power distribution along the channel is a function of the refuelling scheme. It depends on the fuelling history of that particular channel. The bundle power profile for a 7.3 MW high-power channel is shown in Figure 4.3-8. Proximity of a channel to one or more zone controllers also affects the axial power profile.

4.3.2.2.6 Uncertainties in Power Distribution

The accuracy of power distribution calculations will be confirmed through neutron flux measurements during commissioning of the ACR-700, and through comparisons of measured and calculated channel powers and neutron fluxes during the operation of the plant.

4.3.2.2.7 Monitoring

Fast-responding in-core flux detectors monitor the power distribution. The signals from these detectors are processed to determine adjustments needed to maintain the reactor bulk power as demanded, and differential movement of the zone controllers to maintain a spatially balanced power distribution. Since these detectors only sense the flux at local regions, they are automatically calibrated every two minutes by the processed output of the flux mapping system based on the signals of a set of vanadium detectors distributed throughout the core.

4.3.2.3 Reactivity Coefficients

“Reactivity coefficients” are defined as small reactivity changes about the nominal operating conditions. “Reactivity changes” are calculated as differences between given initial and final

operating states. The results of the calculated reactivity coefficients and reactivity changes are given in the following subsections.

The important parameters that influence the dynamic system reactivity (i.e., including the effect of delayed neutrons) are coolant density (or void), fuel temperature (based on the current bundle power and the coolant temperature), coolant temperature, and moderator poison concentration.

4.3.2.3.1 Fuel Temperature

The lattice parameters are affected by variations in fuel temperature due to changes in the neutron cross sections in the neutron energy spectrum. During operation at constant power, the fuel temperature distribution is related to the power distribution. However, the effect of the fuel temperature distribution on the overall neutron balance can be reproduced by using a spatially constant value, which is a typical effective fuel temperature from a neutronic point of view. The effective fuel temperature is the single uniform fuel temperature value, which, when used in a three-dimensional time-average calculation, results in the same core reactivity as would be obtained by the distributed fuel temperature calculation.

Figure 4.3-9 shows the reactivity change (from the effective fuel temperature of 687°C) expected as a function of fuel temperature for equilibrium fuel. For the ACR equilibrium core, the lattice fuel temperature coefficient is –0.014 mk/°C.

4.3.2.3.2 Moderator Temperature (Including Density Effects)

Reactivity effects due to changes in moderator temperature including density effects are calculated over the range from 70°C to 90°C. The moderator temperature coefficient for the ACR equilibrium core is –0.024 mk /°C. Since the moderator temperature is controlled independently of the coolant temperature and the time constant for any significant change in the moderator temperature is very long compared to the duration of most reactivity transients, the moderator temperature reactivity effect is not important in reactor dynamics. However, the negative moderator temperature feedback in the ACR does enhance reactor stability in the medium-term time frame.

4.3.2.3.3 Coolant Temperature (Including Density Effects)

Lattice reactivity effects due to changes in coolant temperature are calculated over the range of 290°C to 310°C. The calculations assume an average effective temperature for the whole core. The density change accompanying a change in coolant temperature at constant pressure is included in these calculations. The coolant temperature coefficient including density effects for the ACR equilibrium core is –0.010 mk/°C. This negative coolant temperature feedback tends to stabilize the spatial power distribution following a global power perturbation.

4.3.2.3.4 Coolant-Void Reactivity

Void reactivity is calculated as the total reactivity change due to the complete loss of coolant from all the fuel channels. The ACR-700 is designed to operate with a slightly negative full-core coolant-void reactivity. Full-core coolant-void reactivity calculated with a time-average model is about –7 mk. Figure 4.3-10 shows the shift in reactor power (thermal flux) distribution from the reactor centre towards the edge due to full core LOCA. This increase in neutron leakage from the ACR-700 upon LOCA results in a significantly more negative CVR than that indicated by the lattice code calculations. Because of the large change in reactor thermal flux distribution upon LOCA, the lattice code calculations alone cannot predict the full-core coolant-void reactivity accurately. Hence, the full-core coolant-void reactivity for the ACR should always be obtained from full-core simulations using nuclear parameters generated by the lattice calculations.

4.3.2.3.5 Moderator Poison Concentration

Reactivity effects due to changes in moderator poison (boron) are calculated for the range from zero to 10 ppm of boron concentration. Each ppm of boron in the moderator makes the full core coolant-void reactivity less negative by about 0.5 mk. Gadolinium is also used as a moderator poison. The reactivity effect of one ppm of gadolinium is equivalent to that of 3.5 ppm of boron. Each ppm of boron in the moderator increases the full core coolant-void reactivity by about 0.5 mk. Therefore, it is important to minimize the usage of moderator poison in the ACR-700 in order to keep the full core coolant-void reactivity at a slightly negative value.

4.3.2.3.6 Moderator Purity

The nominal moderator D_2O purity is 99.78 weight % with the remaining 0.22 weight % made up of H_2O. A decrease in moderator D_2O purity implies an increase in H_2O concentration. Due to the rather large absorption cross section of H_2O, even a small increase in H_2O concentration will lead to a significant loss of reactivity and burnup.

Over the range of 99.5 to 99.9 atom percent, the purity coefficient of reactivity are 2.3 mk/wt% for equilibrium fuel. It should be noted that these coefficients are calculated for an infinite lattice. In the actual reactor, there is on the outside a D_2O reflector which has a purity coefficient different from that of the moderator. A realistic core simulation showed that the system D_2O purity coefficient is roughly 10% higher than the lattice value.

The small amount of H_2O in the moderator also reduces the magnitude of the negative coolant-void reactivity in the core. Figure 4.3-11 shows the relationship between full core coolant-void reactivity and the D_2O purity over the range of 99.95 to 99.50. The coefficient is almost linear and predicts an increase in full-core coolant-void reactivity of 10 mk per percent reduction in D_2O purity. There is a strong incentive to keep the D_2O purity as high as possible in order to achieve good fuel burnup and a sufficiently negative coolant-void reactivity.

4.3.2.3.7 Coolant Purity

The reactivity effect of the coolant purity is irrelevant in the ACR since H_2O is used for coolant.

4.3.2.3.8 Reactor Power

The concentration of certain neutron absorbers in the fuel (i.e., isotopes of xenon, samarium, and rhodium) is dependent on the neutron flux level. In addition to changes in fuel temperature and neutron spectrum, these nuclides strongly contribute to the reactivity effects that follow changes in power level.

Changes in power level affect reactivity due to its dependence on fuel and coolant temperature. The power coefficient of reactivity is related to the fuel temperature coefficient through the change in fuel temperature per percent change in power. In addition, power level changes are followed by changes in coolant temperature and density, which contribute to the reactivity effect. The power coefficient of the ACR-700 is –0.07 mk/% of full power calculated between 95% and 105% full power. This coefficient is non-linear and the total reactivity change from 0% to 100% full power is –8.0 mk.

4.3.2.3.8.1 Shutdown Negative Reactivity Insertion Rate and Amount

In the case of an accident terminated by SDS1, it is assumed that 2 of the 24 SORs are unavailable. The missing SORs are chosen so that the remaining 22 have the least worth. The drop curve for the SORs is taken from the design (and measured) curve and then 150 ms delay is added for conservatism. The trip time is taken as the second neutronic trip, and requires that all three logic channels are tripped before it is credited. The trip setpoints are also adjusted upward from their design values to account for uncertainties in the electronics and calibration.

In the case of SDS2 termination, it is assumed that one of the 6 poison tanks or nozzles is not functioning. Again this is chosen on the basis that the remaining nozzles have a minimum reactivity worth. The same assumptions as for SDS1 are applied to the trip time. An additional delay of 50 ms is introduced into the actuation time to account for possible additional uncertainties.

4.3.2.4 Delayed Neutrons and Reactor Kinetics

The dynamic characteristics of CANDU reactors are strongly influenced by the presence of delayed neutrons. Delayed neutrons in CANDU reactors are produced both by direct neutron decay of some of the fission products and by photo-disintegration of the deuterons in heavy water.

The total delayed neutron fraction decreases with irradiation due to the depletion of U-235 and the buildup of Pu-239. The delayed neutron fraction from Pu-239 fissions is about one-third of that from U-235 fissions. The contribution from the photo-disintegration of the deuterons is relatively independent of fuel irradiation, and it constitutes less than 5% of the total delayed neutron fraction.

Prompt neutron lifetime in a CANDU lattice is relatively long (between 0.33 ms for ACR and 0.9 ms for NU CANDU) due to the relatively long diffusion time of the thermal neutrons. Furthermore, the delayed neutron fraction is enhanced due to the presence of delayed photoneutrons. These two factors considerably slow down a potential power excursion and hence relax the performance requirements on the shutdown systems. The influence of the longer neutron lifetime is illustrated in Figure 4.3-12, which shows the reactor period as a function of reactivity insertion for reactors with various neutron lifetimes. Evidently, for reactivity insertions at or near prompt critical, the CANDU lattice with the long neutron lifetime does not experience a drastic reduction in reactor period (time needed for an e-fold increase in neutron population) and hence does not experience a sudden increase in power excursion rate.

4.3.2.5 Control Requirements and Reactivity Worth

Day-to-day reactivity control is done by on-power refuelling and zone control action. This includes control of refuelling perturbations and suppression of xenon-oscillations.

During off-normal operations, especially those that involve large changes in power, feedback reactivity due to changes in temperature, density, and level of saturating fission products appears and is controlled by the use of control absorbers (CAs), and soluble boron addition to the moderator.

Because the negative reactivity load at 100% power due to xenon-135 disappears after a long shutdown (>30 h), soluble poison in the moderator is used to suppress the excess reactivity.

4.3.2.5.1 Zone Control Units

The zone control system consists of nine vertical assemblies with two independently moveable segments in each assembly. Reactivity is adjusted by varying the lengths of the absorbers inserted into the core, based on a signal from the station computer. The zone controller system is designed so that, during normal operation, the average zone control absorber element remains in the range 20% to 80% of full insertion.

The zone control system is designed to perform two main functions:

a) Bulk control - i.e., control of power output

   The zone control system will provide short-term fine control of reactivity to maintain reactor power at demanded level during normal operation.

b) Spatial control - i.e., control of flux and power shapes

   The zone control system will maintain the desired global flux and power distributions by counteracting any power distortion or oscillation brought on by a space dependent reactivity perturbation. In practice, the perturbations can be caused by:

   1) fuel burnup and refuelling of channels,

   2) power level changes,

3) changes in the heat transport system conditions,
4) xenon oscillations,
5) movement of absorber elements, and
6) small variations in moderator poison concentration.

4.3.2.5.2 Control Absorber Units

Eight control absorber units (CAs) are provided for rapid controlled power reductions and to compensate for the fuel temperature reactivity effect for shutdown under fresh fuel conditions. The control absorber elements are physically similar to the shutdown SORs. Normally, the control absorbers are positioned outside the core. Their arrangement is shown in Figure 4.1-3.

Since the reactivity increase following a power reduction is significant and usually rapid, the zone controllers alone are incapable of counteracting the increase in all cases. In particular, the reactivity increase is the highest following a hot shutdown (when fuel temperature drops to coolant temperature), and for fresh fuel. In this case, CAs are used to compensate for the reactivity increase.

The control absorbers are normally inserted in banks (of two absorber elements each) but can also be inserted individually. The percentage insertion depends on the degree of reactor power reduction. The optimum speed of insertion is determined primarily from control considerations.

In summary, the maximum rate of positive reactivity insertion due to any set of reactivity devices of the reactor regulating system ranges between 0.05 mk/s for CAs and 0.2 mk/s for the ZCU.

4.3.2.6 Shutdown Systems

The ACR-700 reactor is equipped with two physically independent shutdown systems. These systems are designed to be both functionally different and geometrically separate. The functional difference is achieved by the use of 24 shutoff units for SDS1 and six liquid injection nozzles for SDS2.

The 24 shutoff rods are inserted vertically by gravity drop. Their locations are shown in Figure 4.1-3. The six poison injection nozzles are positioned horizontally, as shown in Figure 4.3-7 (indicated on the figure as LI1 through 6). A concentrated solution of gadolinium in D_2O is injected under pressure into the moderator space between the calandria tubes.

The in-core instrumentation feeding flux signals to the shutdown systems is also separated in a geometrical sense. Vertical flux detector units and fission chambers on side ‘D’ are used for SDS1 while horizontal flux detector units and ion chamber units on side ‘B’ are used for SDS2. Other instrumentation monitoring the core conditions also feed into SDS1 and SDS2.

4.3.2.6.1 Shutdown Margins

Owing to its large negative reactivity worth, SDS2 provides more than adequate shutdown margin for any conceivable core condition. Normally both shutdown systems are active and the shutdown margin provided by SDS2 is further augmented by the action of SDS1. The systems are, nevertheless, designed to be independently capable of providing adequate shutdown margin.

The normal operation of the regulating system would insert all zone control absorber elements and drop the control absorbers on a reactor trip, and it could automatically add moderator poison, if required. This would increase the shutdown margin further.

As already stated, the shutdown margin of SDS2 acting alone is much greater than needed for any conceivable core condition.

4.3.2.7 Reactivity Variations due to On-Power Refuelling During Equilibrium Operation

Since the reactor is fuelled continuously and on-power at a rate which keeps the reactor critical, the control requirements for refuelling are within the range of the zone controller response. Soluble poison concentration is normally near zero.

For a standard 2-bundle shift fuelling scheme, the reactivity increase due to refuelling in an average channel is less than 0.2 mk. This reactivity change is sufficiently controlled by the zone controllers.

4.3.2.8 Reactor Dynamics and Control

4.3.2.8.1 Spatial Instability and Sources of Perturbation

The ACR-700 is expected to be stable at all operating power levels up to 100 % full power because of the tight neutronic coupling in the compact core and the strong negative power feedback coefficient. However, the ACR-700 is equipped with a powerful spatial control system, which is designed to provide effective control of all spatial disturbances so that oscillatory behaviour of the flux distribution does not occur.

Flux perturbations arise routinely from on-power refuelling operations and from movements of control devices. Apart from exciting higher flux harmonics, on-power refuelling leads to local channel power variations with a nominal value of about 7%. These are local effects and hence are allowed for in the design margins. The spatial control system prevents any global flux tilts which asymmetric fuelling would tend to induce. In typical refuelling operations at power, regional power tilts (i.e., power difference between two symmetrically opposite reactor regions) are controlled to within one percent.

Under normal equilibrium full power operation, side-to-side, top-to-bottom, and end-to-end flux tilts are controlled to within ± 3%.

The spatial control system is designed to maintain stable control of the power distribution for any of the normal movements of other control devices (control absorbers). If any one zone is greater than 110% of its nominal value or if any 4 zones exceed 106% of their nominal values, setback or stepback is automatically initiated.

4.3.2.8.2 Automatic Spatial Control

The zone controllers are used both for bulk reactivity and for spatial flux control. Bulk reactivity is controlled by varying the average insertion length of all zone control absorbers. Spatial flux control is achieved by varying the insertion length of individual absorbers.

A prompt measurement of zone flux is made with self-powered platinum-clad inconel straight individually replaceable (SIR) in-core detectors (two per zone). A slightly delayed calibrated zone power signal is obtained from an on-line flux mapping system. These signals are processed in the on-line digital control computers. Individual zone controllers respond to zone power "errors" between the measured values and their respective nominal setpoints.

4.3.2.8.3 On-Line Flux Mapping

The ACR-700 reactors are equipped with an on-line flux mapping system. This system produces detailed flux and channel power distributions based on self-powered in-core vanadium flux detectors. This information is used to provide a calibrated average zone flux signal for use by the spatial control system, a power setback parameter for the setback routine, and on-line data for operator information. A flux map is calculated automatically at two-minute intervals.

The technique of flux mapping consists essentially of synthesizing the flux distribution from a pre-selected set of flux modes. The amplitudes for the various modes are calculated using a least square fit to the relative fluxes measured by an array of in-core flux detectors.

The flux mode basis consists of the fundamental mode flux, the higher flux harmonics, and a set of perturbation modes. These flux modes are pre-calculated once, off-line. A set of coupling coefficients is obtained from these simulations and stored in the on-line digital computer. The least squares algorithm involves essentially one matrix-vector multiplication to obtain the mode amplitudes, and a second matrix-vector multiplication to obtain the extended flux map.

The input to the flux mapping system is provided by flux measurements made with a large number of vanadium detectors. These detectors are located in the vertical flux detector assemblies.

4.3.2.8.4 Trip Recovery

When the reactor trips or the power is reduced in a controlled manner because of load following requirements, a temporary increase in the xenon-135 concentration occurs. The magnitude of the increase depends on the time period that the reactor is shut down or is operated at a reduced power level. It also depends on the magnitude by which the power level has been reduced and the rate at which it is reduced in the case of a controlled change in power level.

In the event of a reactor trip, power must be raised again within about 12 minutes or the xenon concentration will rise beyond the capacity of the regulating system to compensate. At this point, all of the zone controllers will be almost completely withdrawn to compensate for the xenon buildup. This results in peaking of the power distribution relative to the normal steady state full power condition. Consequently, power cannot be increased immediately to 100%. However, the power can be raised high enough to "burn out" the excess Xe-135 and as this happens the zone controllers can be reinserted, which in turn permits increasing power.

If the reactor remains shut down long enough (>30 hours) for the Xe-135 concentration to decay to a level that is less than or equal to the normal equilibrium full power level, the rate of increase of reactor power on restart is no longer limited by Xe-135 in the fuel.

4.3.2.9 Calandria and Fuel Channel Irradiation

The calandria vessel in CANDU operates at near-atmospheric pressure. There is a heavy-water reflector surrounding the core so that irradiation by high-energy neutrons is minimal.

The fuel channel is considered to be the pressure boundary in CANDU. The pressure tube is made of a Zr-2.5% Nb, 104 mm in inside diameter and 6.50 mm thick. Irradiation induced changes in the pressure tube are caused by high energy neutrons of 1 MeV or higher. For a typical channel producing 7.3 MW(th) power, the maximum fast-neutron flux level in the pressure tube is about 0.4×10^{14} n/cm^2.s.

Table 4.3-1
ACR Fuel Lattice Data

Description	**Unit**	**Value**
Bundle length	mm	495.3
Lattice pitch	mm	220
Fuel stack length	mm	481.1
Fuel bundle - number of fuel elements in the bundle	-	43
Radius of the UO_2 pellets – inner elements	mm	6.29
Fuel-cladding outside radius – inner elements	mm	6.75
Radius of the UO_2 pellets – outer elements	mm	5.33
Fuel-cladding outside radius – outer elements	mm	5.75
Cladding material	-	Zircaloy-4
Cladding density*	$g \times cm^{-3}$	7.48
Number of elements in the innermost ring	-	1
Number of elements in the inner ring	-	7
Number of elements in the middle ring	-	14
Number of elements in the outer ring		21
Pressure tube inner radius	mm	51.7
Pressure tube outer radius	mm	58.189
Pressure tube material	-	Zr-2.5%Nb
Pressure tube temperature	K	573.16
Pressure tube density	$g \times cm^{-3}$	6.57
Calandria tube inner radius	mm	75.5
Calandria tube outer radius	mm	78
Calandria tube material	-	Zirconium alloy grade R60804
Calandria tube density	$g \times cm^{-3}$	6.44

* effective density to include Zr in the end region

Table 4.3-2
Design Data of Fuel Channel

Number of fuel channels	292
Length of 12 bundles in the fuel channel	594.4 cm
Pressure tube (Zr-2.5% Nb) inside radius (uncrept)	5.17 cm
Average pressure tube wall thickness (uncrept)	0.65 cm
Calandria tube inside radius	7.55 cm
Average calandria tube wall thickness	0.25 cm

Table 4.3-3
Fuel Design Data

Bundle design	**ACR CANFLEX 43-Element***	
	11.5 mm OD Els.	**13.5 mm OD Els.**
Pellet Data:		
Pellet OD (mm)	10.65	12.58
Pellet Length (mm)	10.60	16
Nominal Density (g/cm^{33})	10.65	10.65
Fuel Element Data:		
Number of Elements	35	8
Number of Pellets per stack	45	30
Stack length (mm)	481.1	481.1
Bundle U Mass (kg)	17.98	
Bundle Zr Mass (kg)	2.3	

* Arranged in concentric rings of 1, 7, 14 and 21 elements.

Table 4.3-4
Design Data of ACR-700 Core

Number of fuel channels	292
Lattice pitch	22.0 cm (square)
Reactor core radius	520.0 cm
Reflector thickness (average)	48 cm

Number of zone control units (stainless steel)	9
Number of control absorbers units (boron carbide)	8
Number of shutoff units (boron carbide)	24
Number of liquid injection shutdown system nozzles	6

Table 4.3-5
Major Reactivity Effects in ACR-700 Core

Parameter	Unit	Value
Moderator Temperature (including density) Effect (70°C to 90°C)	mk/°C	-0.024
Coolant Temperature (including density) Effect (290°C to 310°C)	mk/°C	-0.010
Fuel Temperature Effect (from 687 to 787 °C)	mk/°C	-0.014
Boron increased from 0 to 5 ppm in Moderator	mk/ppm	-2.1
Power Coefficient (95% -105% Full Power)	mk/% power	-0.07
Reactivity change from 0% to 100% full power	mk	-8.0
Full-core Coolant-Void Reactivity	mk	-7

Table 4.3-6
Typical Results of Time-Average Simulation
(Average Zone Controller Level = 50% Inserted)

Core Configuration	CAs and SORs out
Total Fission Power	2114.4 MW
Core Thermal Power	2037 MW (th)
Fuelling Scheme	2-bundle shift
Radial Form Factor	0.95
Peak Channel Power	7.3 MW
Peak Bundle Power	850 kW
Core-average Exit Irradiation	3.5 n/kb
Core-average Discharge Bundle Burnup	20.5 MWd/kgU
Channel Average Exit Burnup	24 MWd/kgU
Maximum Fuel Element Burnup	28 MWd/kgU
Core-average Dwell Time	100 FPD

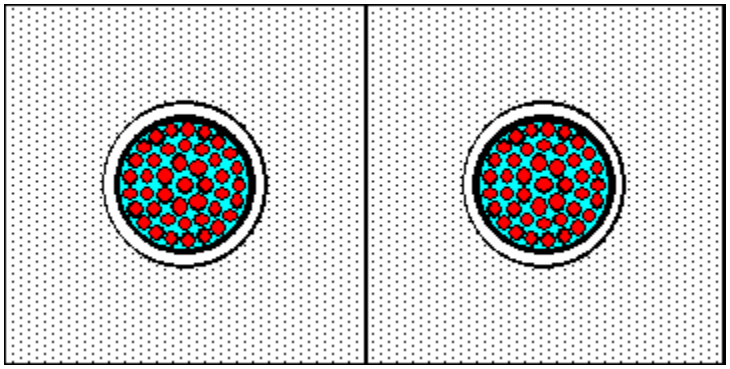

NU CANDU Lattice
LP = 286 mm.
PT_{OR} = 56 mm.
CT_{OR} = 66 mm.
V_M/V_F = 16.4

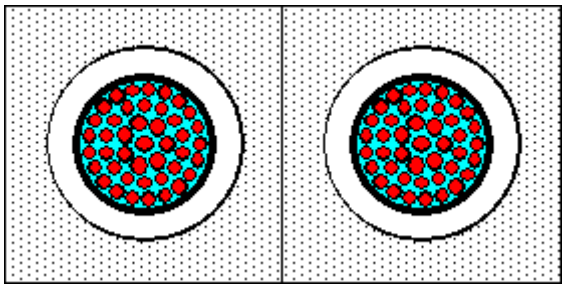

ACR-700 Lattice
LP = 220 mm.
PT_{OR} = 58 mm.
CT_{OR} = 78 mm.
V_M/V_F = 7.1

Figure 4.3-1 Lattice-Cell Configurations for NU CANDU and ACR-700

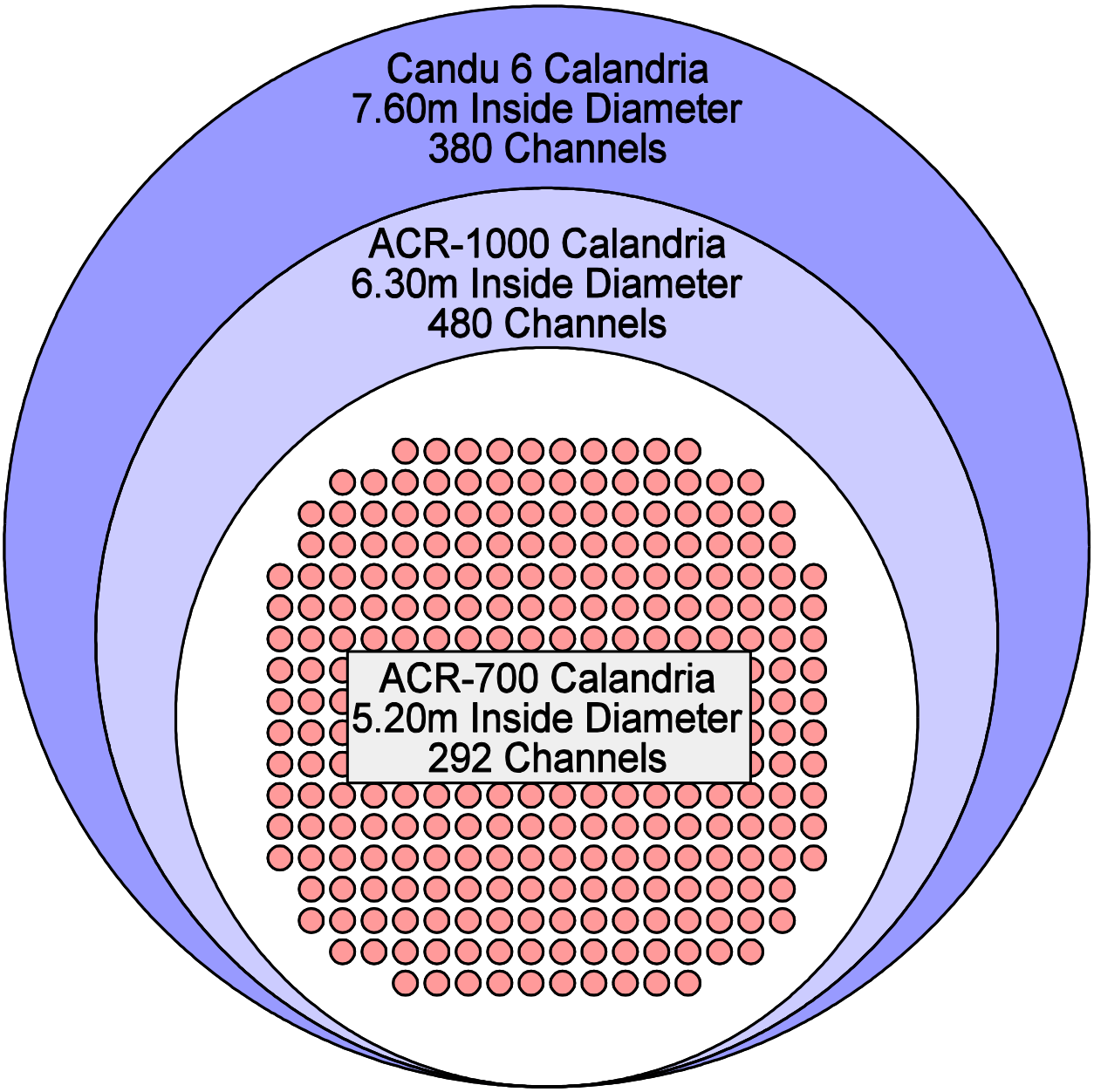

Figure 4.3-2 Comparison of Reactor-Core Sizes

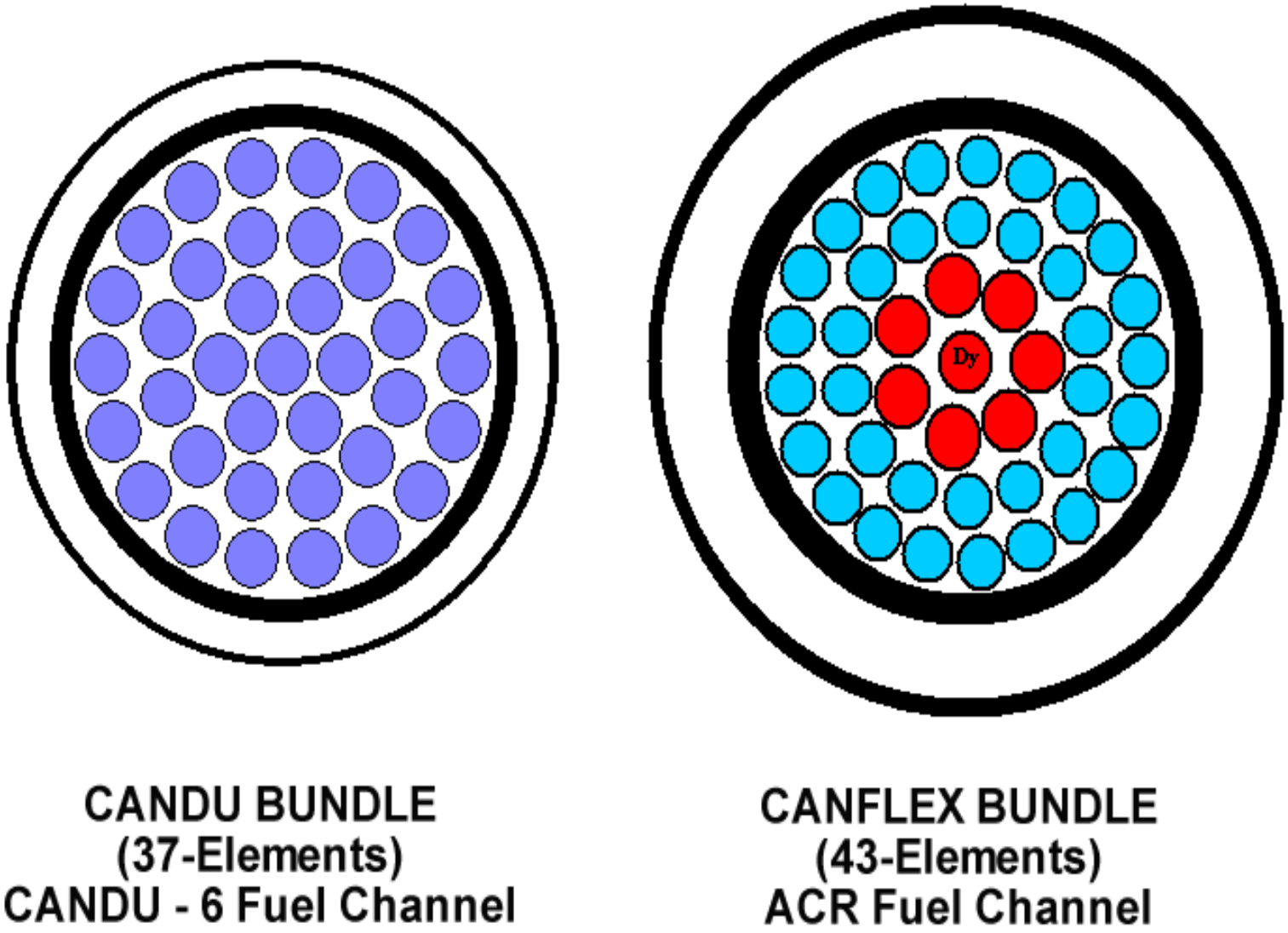

Figure 4.3-3 CANFLEX Fuel Bundle

	1	2	3	4	5	6	7	8	9	10	11	12	13	14	15	16	17	18
A					1T	1T	1T	1T	1T	1T	1T	1T	1T	1T				
B			CRN	1T	1T	1T	2T	2T	2T	2T	2T	2T	1T	1T	1T	CRN		
C		CRN	1T	1T	2T	2T	2T	4T0	4T0	4T0	4T0	2T	2T	2T	1T	1T	CRN	
D		1T	2T	2T	3T0	3T0	3T0	4T0	4T0	4T0	4T0	3T0	3T0	3T0	2T	2T	1T	
E	1T	1T	2T	3T0	3T0	3T0	4T1	4T0	4T0	4T0	4T0	4T1	3T0	3T0	3T0	2T	1T	1T
F	1T	3T	3T	3T	3T	4T1	5T0	5T0	5T0	5T0	5T0	5T0	4T1	3T	3T	3T	3T	1T
G	2T0	3T	3T	4T	4T1	4T1	5T0	6T	6T	6T	6T	5T0	4T1	4T1	4T	3T	3T	2T0
H	2T0	4T	4T	4T	5T	5T	5T	6T	6T	6T	6T	5T	5T	5T	4T	4T	4T	2T0
J	2T0	4T	4T	4T	5T	5T	5T	6T	6T	6T	6T	5T	5T	5T	4T	4T	4T	2T0
K	2B0	4B	4B	4B	5B	5B	5B	6B	6B	6B	6B	5B	5B	5B	4B	4B	4B	2B0
L	2B0	4B	4B	4B	5B	5B	5B	6B	6B	6B	6B	5B	5B	5B	4B	4B	4B	2B0
M	2B0	3B	3B	4B	4B1	4B1	5B0	6B	6B	6B	6B	5B0	4B1	4B1	4B	3B	3B	2B0
N	1B	3B	3B	3B	3B	4B1	5B0	5B0	5B0	5B0	5B0	5B0	4B1	3B	3B	3B	3B	1B
O	1B	1B	2B	3B0	3B0	3B0	4B1	4B0	4B0	4B0	4B0	4B1	3B0	3B0	3B0	2B	1B	1B
P		1B	2B	2B	3B0	3B0	3B0	4B0	4B0	4B0	4B0	3B0	3B0	3B0	2B	2B	1B	
Q		CRN	1B	1B	2B	2B	2B	4B0	4B0	4B0	4B0	2B	2B	2B	1B	1B	CRN	
R			CRN	1B	1B	1B	2B	2B	2B	2B	2B	2B	1B	1B	1B	CRN		
S					1B	1B	1B	1B	1B	1B	1B	1B	1B	1B				

Figure 4.3-4 ACR-700 Irradiations Regions

	1	2	3	4	5	6	7	8	9	10	11	12	13	14	15	16	17	18
A					14.4	14.5	14.5	14.4	14.5	14.5	14.4	14.5	14.5	14.4				
B			8.2	14.6	14.7	14.7	21.6	21.6	21.7	21.7	21.6	21.6	14.7	14.7	14.6	8.2		
C		8.2	14.7	14.8	21.7	21.6	21.6	25.1	25.1	25.1	25.1	21.6	21.6	21.7	14.8	14.7	8.2	
D		14.5	21.6	21.7	25.0	24.9	24.9	25.1	25.1	25.1	25.1	24.9	24.9	25.0	21.7	21.6	14.5	
E	14.3	14.7	21.6	24.9	24.9	24.9	25.4	25.0	25.1	25.1	25.0	25.4	24.9	24.9	24.9	21.6	14.7	14.3
F	14.4	24.4	24.4	24.4	24.4	25.4	25.6	25.6	25.6	25.6	25.6	25.6	25.4	24.4	24.4	24.4	24.4	14.4
G	16.4	24.4	24.4	24.1	25.4	25.4	25.6	25.8	25.8	25.8	25.8	25.6	25.4	25.4	24.1	24.4	24.4	16.4
H	16.4	24.1	24.1	24.1	25.8	25.8	25.8	25.8	25.8	25.8	25.8	25.8	25.8	25.8	24.1	24.1	24.1	16.4
J	16.4	24.1	24.1	24.1	25.8	25.8	25.8	25.8	25.8	25.8	25.8	25.8	25.8	25.8	24.1	24.1	24.1	16.4
K	16.4	24.1	24.1	24.1	25.8	25.8	25.8	25.8	25.8	25.8	25.8	25.8	25.8	25.8	24.1	24.1	24.1	16.4
L	16.4	24.1	24.1	24.1	25.8	25.8	25.8	25.8	25.8	25.8	25.8	25.8	25.8	25.8	24.1	24.1	24.1	16.4
M	16.4	24.4	24.4	24.1	25.4	25.4	25.6	25.8	25.8	25.8	25.8	25.6	25.4	25.4	24.1	24.4	24.4	16.4
N	14.4	24.4	24.4	24.4	24.4	25.4	25.6	25.6	25.6	25.6	25.6	25.6	25.4	24.4	24.4	24.4	24.4	14.4
O	14.3	14.7	21.6	24.9	24.9	24.9	25.4	25.0	25.1	25.1	25.0	25.4	24.9	24.9	24.9	21.6	14.7	14.3
P		14.5	21.6	21.7	25.0	24.9	24.9	25.1	25.1	25.1	25.1	24.9	24.9	25.0	21.7	21.6	14.5	
Q		8.2	14.7	14.8	21.7	21.6	21.6	25.1	25.1	25.1	25.1	21.6	21.6	21.7	14.8	14.7	8.2	
R			8.2	14.6	14.7	14.7	21.6	21.6	21.7	21.7	21.6	21.6	14.7	14.7	14.6	8.2		
S					14.4	14.5	14.5	14.4	14.5	14.5	14.4	14.5	14.5	14.4				

Figure 4.3-5 ACR-700 Channel Average Exit Burnup (MWd/kgU)

	1	2	3	4	5	6	7	8	9	10	11	12	13	14	15	16	17	18
A					5974	6595	7023	7151	6984	6984	7150	7022	6594	5972				
B			6100	6375	6700	7188	6912	6899	6707	6707	6899	6911	7186	6698	6373	6097		
C		6191	6464	6921	6835	7186	7285	6975	6770	6770	6974	7284	7184	6833	6919	6461	6187	
D		6608	6589	6923	6925	7130	7198	7153	7023	7023	7152	7197	7129	6923	6921	6587	6605	
E	6185	6809	6897	6956	7129	7234	7245	7268	7225	7224	7267	7244	7232	7127	6953	6894	6806	6181
F	6500	6365	6844	7117	7270	7263	7270	7282	7262	7261	7281	7269	7262	7268	7114	6841	6361	6496
G	6724	6514	6935	7205	7243	7289	7289	7290	7276	7275	7289	7288	7287	7241	7202	6932	6511	6720
H	6959	6652	7027	7249	7224	7257	7277	7297	7286	7286	7297	7276	7255	7222	7246	7024	6648	6954
J	7079	6719	7069	7272	7231	7257	7277	7300	7290	7290	7299	7276	7255	7229	7269	7066	6716	7074
K	7079	6719	7069	7271	7231	7257	7277	7299	7290	7290	7299	7276	7255	7229	7269	7066	6716	7074
L	6958	6651	7026	7248	7223	7256	7277	7297	7285	7285	7296	7275	7255	7221	7246	7023	6648	6953
M	6723	6513	6934	7203	7241	7287	7288	7289	7274	7274	7288	7287	7286	7239	7201	6931	6510	6719
N	6499	6363	6843	7115	7268	7262	7268	7280	7260	7260	7279	7267	7260	7266	7113	6840	6360	6495
O	6183	6807	6895	6954	7127	7232	7243	7266	7223	7222	7265	7242	7230	7125	6951	6892	6804	6179
P		6606	6587	6921	6922	7128	7196	7151	7021	7020	7150	7194	7126	6920	6918	6584	6602	
Q		6188	6461	6919	6832	7183	7282	6972	6767	6767	6971	7281	7181	6830	6916	6458	6185	
R			6097	6372	6697	7184	6908	6896	6703	6703	6895	6907	7183	6695	6370	6094		
S					5970	6591	7018	7146	6979	6979	7145	7017	6589	5968				

Figure 4.3-6 ACR-700 Time-Average Channel Power (kW) Map for 2-Bundle-Shift Fuelling Scheme

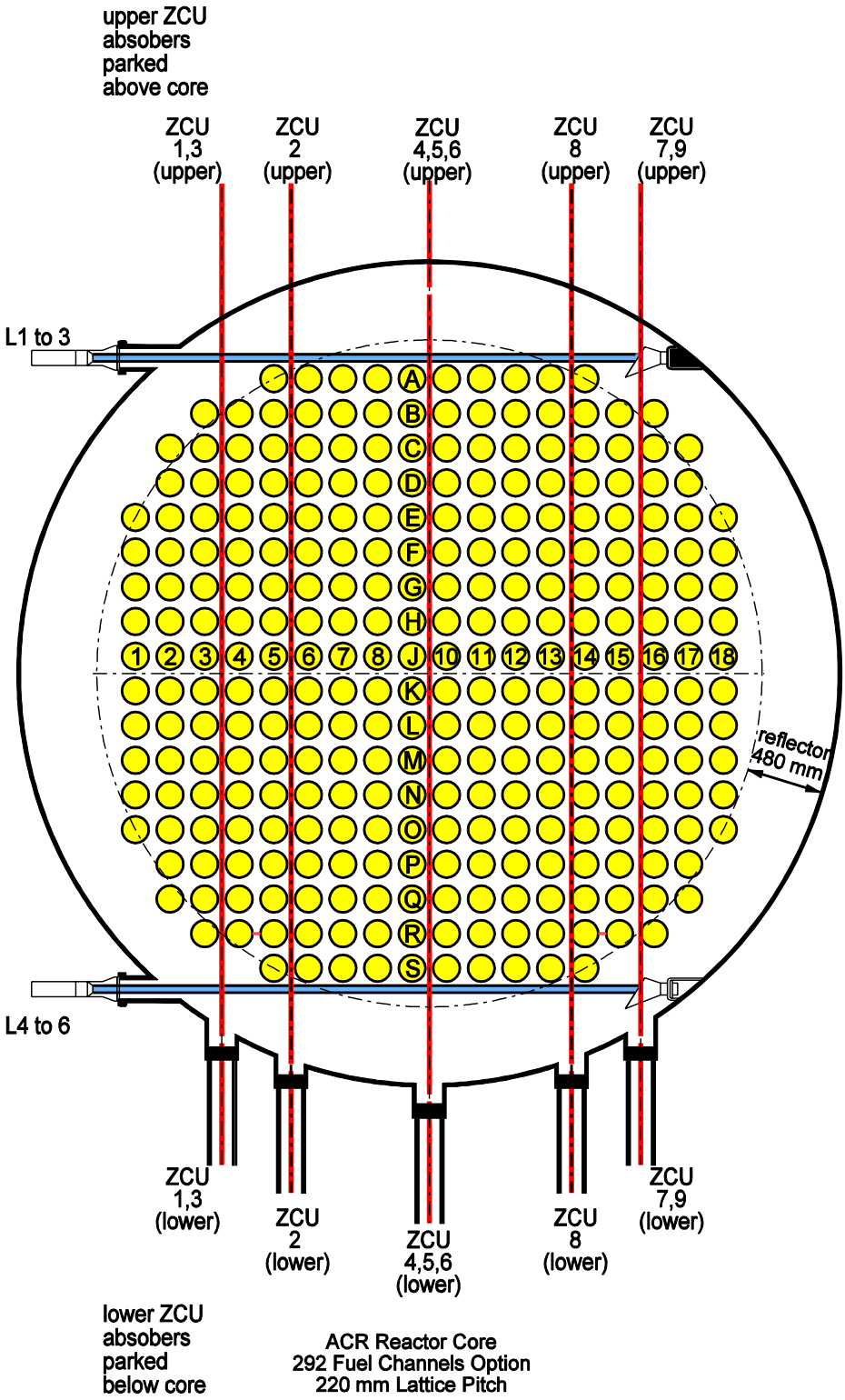

Figure 4.3-7 End-View of ACR-700

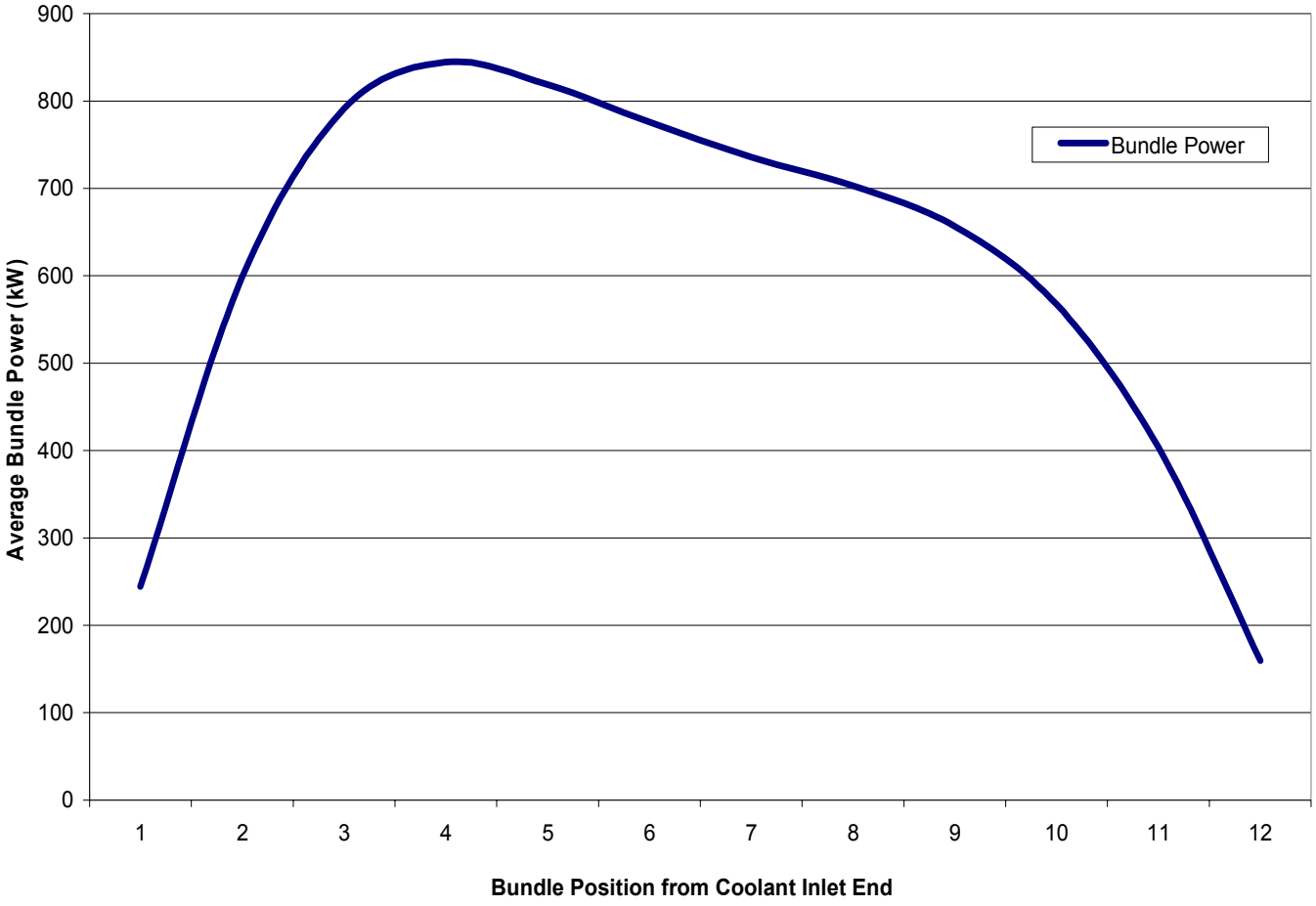

Figure 4.3-8 Bundle-Power Profile for 7.3 MW High-Power Channel

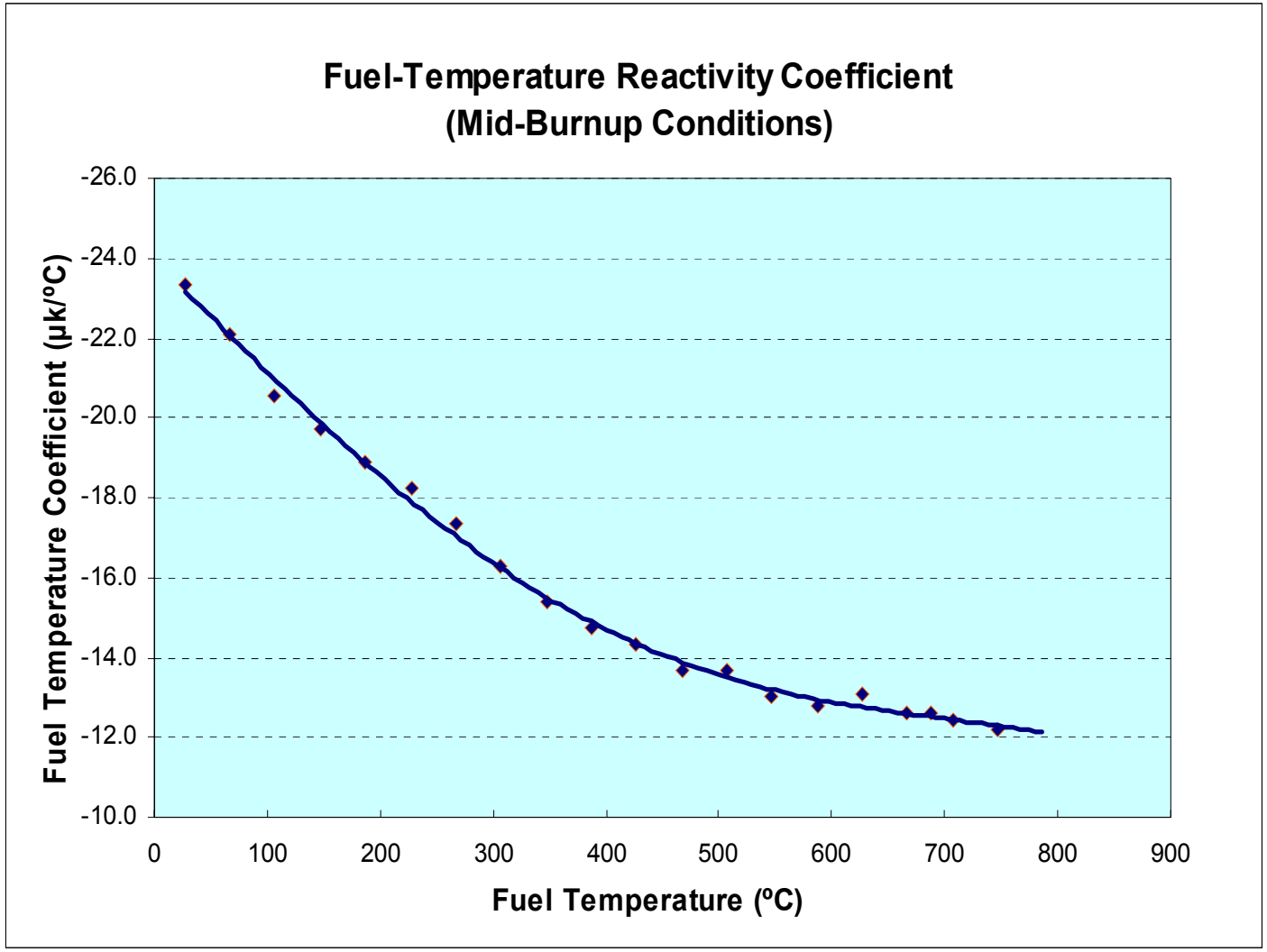

Figure 4.3-9 Reactivity Change Due to Instantaneous Change in Fuel Temperature

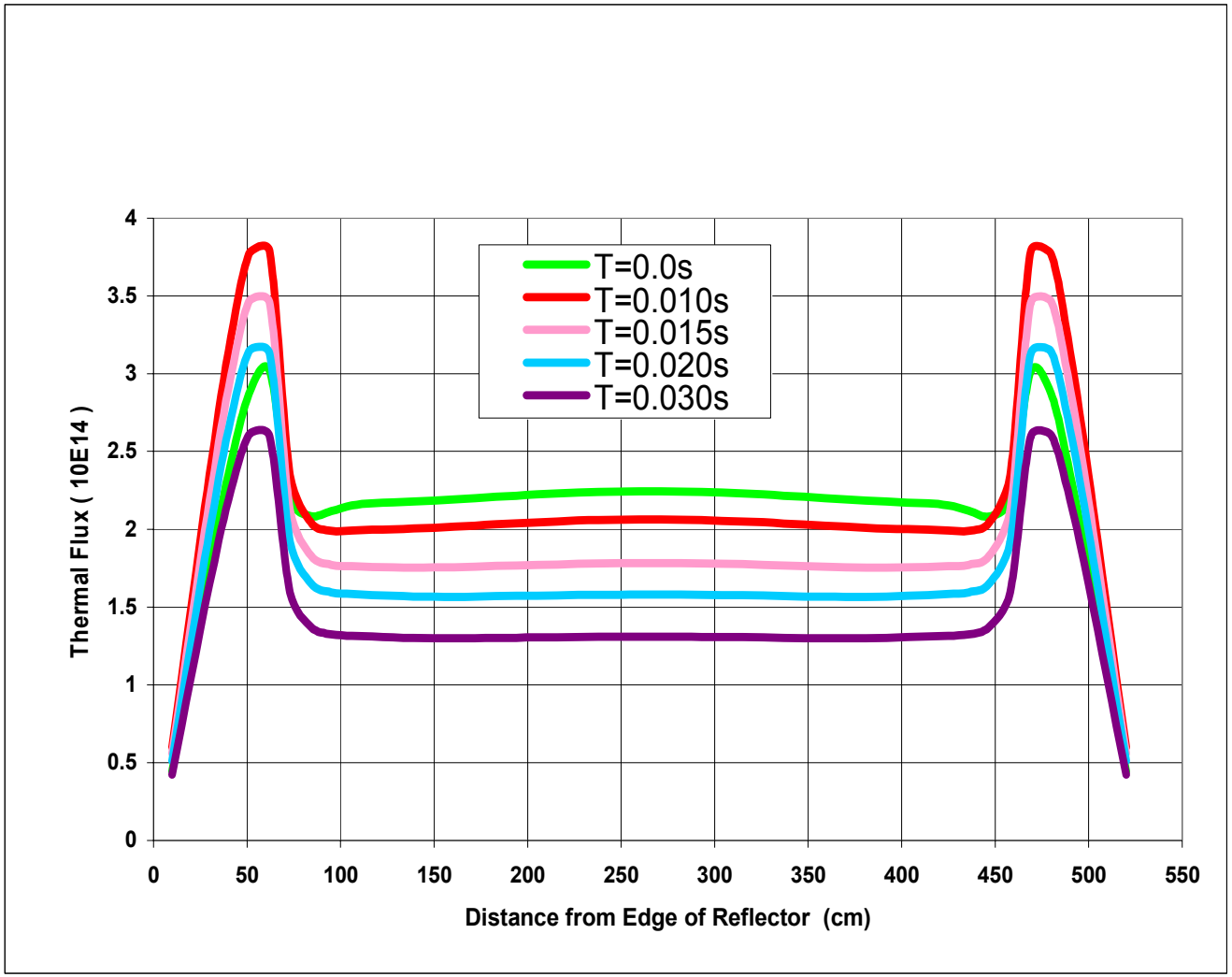

Figure 4.3-10 Voiding Effect on the Flux/Power Profile upon LOCA (Normalized to Constant Reactor Power)

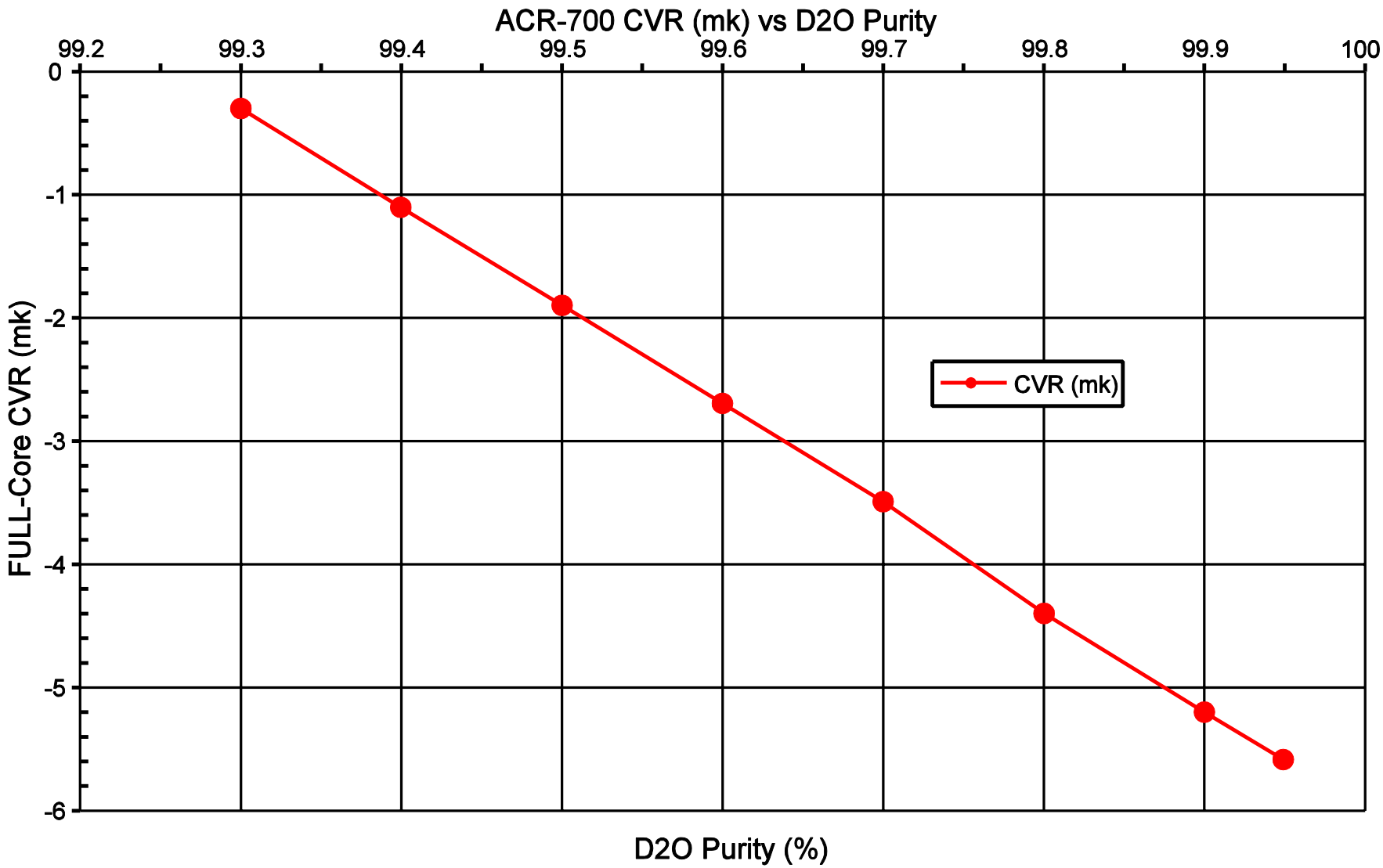

Figure 4.3-11 Coolant Void Reactivity upon Changing the Moderator Purity

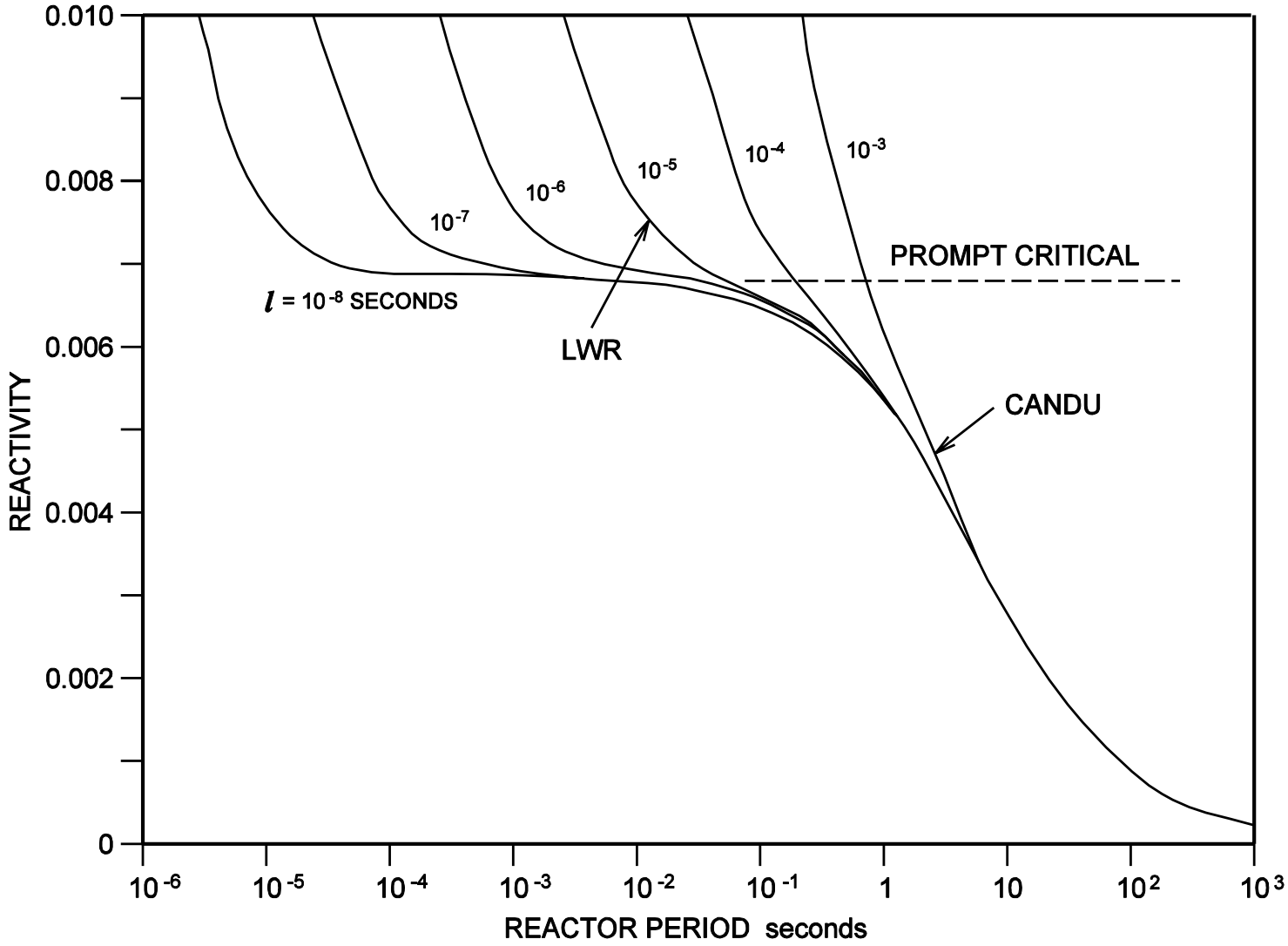

Figure 4.3-12 Relationship between Reactor Period and Reactivity for Various Neutron Lifetimes

4.4 Thermal Hydraulic Design

This section addresses the thermal and hydraulic analysis of the reactor core and the analytical method. The main objective of the thermal and hydraulic design of the reactor core is to ensure that performance and safety requirements are met.

4.4.1 Design Bases

The prevention of thermally or hydraulically induced fuel failure during normal operation, operational transients, and accidents of moderate frequency is one of the performance and safety requirements for the reactor core design. The following design bases have been established, but violation of these design bases will not necessarily result in fuel failure. The shutdown systems provide for automatic reactor trip to ensure fuel integrity.

a) The margin to onset of intermittent dryout is expressed in terms of the critical power ratio (CPR). The CPR is defined as the ratio of the channel power to attain onset of intermittent dryout, at constant header-to-header pressure drop, to the nominal time-averaged full power of the channel examined.

   The design base limit is established so that thermally induced fuel failure will not occur during normal operation and slow loss of regulation control (LORC) events, which are slow with respect to fluid transport delays in the primary system. The shutdown systems ensure that the design base CPR limit is not violated. The regional overpower protection trip system provides that fuel cladding dryout following a gradual increase in either local or bulk neutron power does not occur. In the case of fast transients, specific protection functions provide that fuel failure following a relatively fast increase in power does not occur.

b) Normal operation and overpower transients shall not cause fuel channel flow instability.

c) The actual flow in each fuel channel with all four pumps in operation shall be equal to or close to the design flow and shall be less than the upper flow limit. The upper flow limit for a fuel channel is based on the endurance test results, and is defined as the flow below which flow-induced vibration levels of fuel bundles and fretting wear of bundles and pressure tubes are acceptable. To-date, single-phase flow tests have been undertaken up to 30 kg/s for which no excessive flow-induced vibration and fretting wear have been observed. Similarly, two-phase flow tests at have shown acceptable flow-induced vibration and fretting wear of the bundles and pressure tubes. The design flow in the fuel channel is based on the fuel channel power so that approximately 2% quality is obtained at the outlet header during normal full power operation for the aged core conditions.

d) The peak temperature of the fuel shall be less than the melting point during normal operation and accidents of moderate frequency.

e) The reactor outlet header quality is limited to 2% so that the key parameters, including pressure drop, critical heat flux margin, erosion, and corrosion are acceptable.

f) The aging effects (such as fouling of steam generator and deformation of pressure tube) on the thermalhydraulic design of the HTS are considered to ensure design requirements are met at the end of life condition.

4.4.2 Thermal and Hydraulic Design of the Reactor Core

4.4.2.1 Critical Channel Power

The critical channel power (CCP) is defined as channel power required to reach dryout on the fuel cladding. The CCP of a fuel channel is predicted assuming nominal (full power) constant header-to-header pressure drop, inlet temperature, and outlet pressure. Predictions of dryout power depend on both the predicted flow and the local heat flux.

Owing to a large number of parallel channels between the inlet and outlet headers, variations in flow resistance in one or more channels do not significantly change the header-to-header pressure drop. Thus, simulating the limiting channel with constant header-to-header pressure drop as a boundary condition adequately represents a multi-parallel channel situation.

4.4.2.2 Channel Flow Distribution

The flow in the fuel channel of an ACR-700 is governed by the geometry of the channel, channel power, header-to-header pressure drop, inlet header temperature, and outlet header pressure. The feeders are sized such that the channel flow distribution matches the nominal power distribution and the CPRs are within the design target.

4.4.2.3 Header-to-Header Pressure Drop

The header-to-header pressure drop includes the inlet feeder, inlet end fitting, fuel string, outlet end fitting, and outlet feeder pressure drop at nominal operating condition.

4.4.2.4 Influence of Power Distribution

The core power distributions in normal operation are controlled by RRS and refuelling by the reactor operator to maintain adequate margin to satisfy the design base for critical power ratio, and to maintain the channel power and bundle power within specified limits.

The axial power distribution can vary as a result of the normal manoeuvering of the reactivity control system, power change, or due to spatial xenon transients. It is necessary to consider these variations of axial power distribution in the evaluation of CPR. In the calculation of critical channel power, the axial flux profiles resulting from various configurations of the reactivity control devices are used for all 292 fuel channels.

The radial power distribution of the ACR-700 used in thermal hydraulic design analysis is composed of the channel axial power distribution and the bundle radial power (i.e., ring power)

distribution. In the critical channel power assessment, the bundle radial power distribution is required.

The maximum channel power is continuously monitored by on-line flux mapping system. The reactor operator will restrict operation of the plant such that the maximum channel powers will be maintained below their limits.

4.4.2.5 Fuel Channel Flow Determination

With given boundary conditions of outlet header pressure, header-to-header pressure drop, channel geometry, power to fuel channel, and inlet header temperature, the fuel channel flow is determined iteratively. During the calculation process, if boiling is encountered, the two-phase multiplier is applied.

4.4.3 Testing and Verification

Before operating the reactor at high power levels, the actual channel coolant flows must be determined and verified to be equal to or greater than the design values for beginning-of-plant life conditions within uncertainty. The channel flow verification measurements during commissioning are taken over a wide range of its operating conditions, from 0% full power cold up to 100% full power.

The verification process involves comparisons of the measured flows of the twelve instrumented safety channels and the measured header-to-header pressure drop, ΔP_{HH}, with the corresponding design predictions for beginning-of-plant life conditions.

In the ACR-700, there is an on-line flux mapping system as part of the RRS. Therefore, the channel powers are continuously monitored to be lower than the channel power limit.

TABLE OF CONTENTS

SECTION **PAGE**

5. REACTOR PROCESS SYSTEMS 5-1

5.1 Heat Transport System 5-1
5.1.1 Design Bases 5-1
5.1.2 Design Description 5-2
5.1.2.1 Fuel Channel Assembly 5-3
5.1.2.2 Steam Generators 5-3
5.1.2.3 Heat Transport Pumps 5-3
5.1.2.4 Valves 5-4
5.1.2.5 Feeders 5-4
5.1.2.6 Headers 5-4
5.1.3 Heat Transport System Pressure Boundary Design 5-5
5.1.3.1 Design Bases 5-5
5.1.3.2 Safety Functions 5-5
5.1.3.3 Overpressure Pressure Protection 5-7
5.1.3.4 In-Service Inspection 5-9
5.1.3.5 Heat Transport System Boundary Leakage Detection Systems 5-9
5.1.4 HTS Component Design 5-10
5.1.4.1 Fuel Channels Assembly 5-10
5.1.4.2 Steam Generators 5-10
5.1.4.3 Heat Transport Pumps 5-14
5.1.4.4 Headers 5-16
5.1.4.5 Piping and Supports 5-16
5.2 Heat Transport Auxiliary Systems 5-21
5.2.1 Pressure and Inventory Control System 5-21
5.2.1.1 Design Bases 5-21
5.2.1.2 Design Description 5-22
5.2.1.3 Overpressure Protection 5-24
5.2.1.4 Component Description 5-24
5.2.2 Heat Transport Purification System 5-25
5.2.2.1 Design Bases 5-25
5.2.2.2 Design Description 5-26
5.2.3 Heat Transport Pump Seal System 5-26
5.2.3.1 Design Bases 5-26
5.2.3.2 Design Description 5-27
5.2.4 H_2O Leakage Collection System 5-28
5.2.4.1 Design Bases 5-28
5.2.4.2 Design Description 5-28
5.2.5 Steam and Feedwater System 5-29
5.2.5.1 Design Bases 5-30
5.2.5.2 Design Description 5-31
5.2.5.3 Component Description 5-33

TABLE OF CONTENTS

SECTION		PAGE
5.3	Moderator Systems	5-41
5.3.1	Design Bases	5-41
5.3.2	Design Description	5-42
5.3.3	Component Description	5-44
5.3.3.1	Pumps	5-44
5.3.3.2	Heat Exchangers	5-44
5.3.3.3	Head Tank	5-45
5.4	Moderator Auxiliary Systems	5-47
5.4.1	Moderator Purification System	5-47
5.4.1.1	Design Bases	5-47
5.4.1.2	Design Description	5-48
5.4.1.3	Component Description	5-49
5.4.2	Moderator Cover Gas System	5-49
5.4.2.1	Design Bases	5-49
5.4.2.2	Design Description	5-50
5.4.2.3	Component Description	5-50
5.4.3	Moderator Liquid Poison System	5-51
5.4.3.1	Design Bases	5-52
5.4.3.2	Design Description	5-52
5.4.3.3	Component Description	5-53
5.4.4	Moderator D_2O Collection	5-53
5.4.4.1	Design Bases	5-53
5.4.4.2	Design Description	5-54
5.4.4.3	Component Description	5-55

5. REACTOR PROCESS SYSTEMS

The reactor process systems include heat transport system and auxiliaries, moderator system and auxiliaries and steam and feedwater systems.

5.1 Heat Transport System

The heat transport system (HTS) circulates pressurized light water (reactor coolant) through the reactor fuel channels to remove heat produced by fission of slightly enriched uranium fuel. The heat is carried by the reactor coolant to the steam generators where it is transferred to ordinary water to produce steam, which subsequently drives the turbine generator.

The major components of the heat transport system are the 292 reactor fuel channels, two vertical steam generators, four motor driven pumps, two reactor inlet headers (RIH), two reactor outlet headers (ROH), and inter-connecting piping. The HTS is arranged in one closed circuit. A simplified heat transport circuit schematic is shown in Figure 5.1-1.

The fuel channels are horizontal and allow access to both ends by the fuelling machines. The headers, steam generators and pumps are located above the reactor to provide thermosyphoning if power is lost to the heat transport pumps. The general layout of the heat transport system in the reactor building is illustrated in Figure 5.1-2.

The HTS is complemented by auxiliary systems that support its operation and maintain its parameters within specified operating ranges. Refer to Section 5.2 for design details of these systems.

5.1.1 Design Bases

The design bases of the heat transport system are:

a) To transport heat produced by the fission of slightly enriched uranium fuel in the reactor fuel channels to the steam generators, where the heat is transferred to light water to produce steam.

b) To provide cooling of the reactor fuel at all times during reactor operation and provide for the coolant to remove decay heat when the reactor is shut down.

c) To contain the heat transport system water inventory with minimum leaking.

d) To design the heat transport pump with sufficient rotational inertia to prevent a sudden decrease in flow if power to the pump motor is lost.

e) To control the inventory via the pressure and inventory control system for all normal modes of operation.

f) To control the chemistry of the reactor coolant via HT purification system

g) To be seismically qualified to the design basis earthquake.

h) To provide containment for fission products that may be released from defected fuel during normal operating conditions.

i) To limit the effects of postulated loss-of-coolant accidents to within the capability of the safety systems and provide a path for emergency coolant flow to the reactor fuel in the event of such an accident.

j) To prevent overpressurization by means of the pressurizer, liquid relief valves and shutdown systems during pressure transients.

k) To provide process measurements for tripping and shutting down the reactor to ensure that system pressure is within allowable limits.

l) To provide process measurements for detection of loss-of-coolant conditions and initiation of emergency core coolant injection, in conjunction with other process signals.

m) To allow decay heat removal by natural circulation under total loss of pumping power.

5.1.2 Design Description

Figure 5.1-1 shows a schematic of the HTS. The general layout of the HTS in the reactor building is illustrated in Figure 5.1-2.

There are two pumps, one steam generator, an inlet header and an outlet header, located at each end of the reactor. The bottom of each steam generator has two inlet pipes that connect to the reactor outlet header. Each steam generator also has two outlets that are connected to the suction line of two heat transport pumps. Each heat transport pump has double discharge pipes that connect to the reactor inlet header. Each inlet header supplies coolant flow to the inlets of the fuel channels located at each end of the reactor via individual feeder pipes.

The coolant flow is in the figure-of-eight loop configuration used in the CANDU 6 plant, with the heat transport pumps in series and the coolant making two core passes. The equipment arrangement results in bi-directional coolant flow through the core. The headers and feeders are arranged so that 50 percent of the fuel channels are served by each inlet header and are uniformly distributed throughout the core. The headers, steam generators and pumps are all located above the reactor.

The pressure in the reactor outlet headers is controlled by a pressurizer connected to the reactor outlet header at one end of the reactor.

The two reactor outlet headers are interconnected to assure flow stability in the HTS. The interconnect line is equipped with two restriction orifices to optimise the effectiveness of the interconnect line.

The major components of the HTS are described below. Additional details of the design and requirements of these components are given in Section 5.1.4.

5.1.2.1 Fuel Channel Assembly

The fuel channel assemblies support and locate the fuel within the reactor core. They allow for flow of the heat transport coolant without leakage, and they also provide for shielding.

Each fuel channel assembly consists of a pressure tube, two end fittings and associated hardware.

Feeder pipes connect the inlet and outlet end fittings to the reactor inlet header and reactor outlet header, respectively, to complete the heat transport system loop. Each feeder pipe is connected to an end fitting sideport by a bolted connection.

Light water coolant flows into the inlet end fitting, through the holes in the liner tube into the central circular section, then into the concentrically aligned shield plug in the end fitting and is directed into the pressure tube.

The outboard end face of each end fitting makes a sealed connection with the fuelling machine to perform on-power fuel insertion and removal. The channel closure is removed and stored by the fuelling machine during refuelling and is re-installed in the end fitting before the fuelling machine comes off the channel.

5.1.2.2 Steam Generators

Two identical steam generators with integral preheaters transfer heat from the reactor coolant on the steam generator primary side to raise the temperature of, and boil, feedwater on the steam generator secondary side. The steam generator consists of an inverted vertical U-tube bundle installed in a shell. Steam-separating equipment is housed in the upper portion of the shell. A steam generator is shown in Figure 5.1-3. A description is provided in Section 5.1.4.2.

5.1.2.3 Heat Transport Pumps

The four heat transport pumps are vertical, single stage centrifugal pumps with single suction and double discharge. A typical heat transport pump is illustrated in Figure 5.1-4.

When maintenance of the shaft seals or the pump internals is required, the coolant level in the HTS can be lowered to a level below the pumps. The long term cooling system cools and maintains the HTS after a reactor shutdown to a temperature suitable for maintenance.

A gland seal circuit supplies cooled and filtered water for lubricating and cooling the mechanical seals. A leakage recovery cavity takes the seal leakage to the H_2O leakage collection system. The gland seal circuit is discussed in Section 5.2.2.

Each pump is driven by a vertical, totally enclosed, air–to-water cooled squirrel cage induction motor. The motor has built-in inertia to prolong pump rundown on loss of power.

5.1.2.4 Valves

There are no valves in the heat transport system main circuits except at interfaces with auxiliary systems. This is because the potential cost of maintenance man-rem for valves and the capital cost of valves exceed the value of benefits attributable to the valves.

In the event of an excessive rate of leakage from a steam generator or from the shaft seals of a heat transport pump, using valves to isolate the components cannot prevent a reactor shutdown or increase the delay until a reactor shutdown is required. The incidence of tube leakage from a steam generator is reduced to a practical minimum by very high standards in design and manufacture. Triplicated shaft seals are provided for the HT pumps to minimize the incidence of excessive leakage.

Valves are not required to isolate the heat transport system components for maintenance. When maintenance of the pump or steam generator is required, the reactor coolant level can be lowered below the components and heat sink maintainedby means of the long term cooling system in shutdown cooling mode.

5.1.2.5 Feeders

The feeders at each end of the reactor run from the fuel channels horizontally or vertically up the face of the reactor and then horizontally across and above the fuelling machine area to the reactor headers.

The feeders are sized to provide the necessary flow to each channel and to fit in the space between the end fittings. They are bolted to the feeder connection provided on each end fitting. Both the inlet and outlet feeders are stainless steel pipes to prevent flow-assisted corrosion.

Access is provided for inspection of feeder spring hangers and feeder pipe and header welds.

5.1.2.6 Headers

There are two reactor outlet headers, one at each end of the reactor. Each of the reactor outlet headers receives the flow from the outlet feeders on one reactor face and conducts the flow to two steam generator inlet lines, which lead to a single steam generator.

There are two reactor inlet headers, one at each end of the reactor. Each of the reactor inlet headers receives the flow from two heat transport pumps through four discharge lines and channels the flow to the inlet feeders on one reactor face.

Design margin is provided in the steam generator to cater for fouling and tube plugging if required as the plant matures. The ACR-700 reactors are designed for reactor inlet header operating temperature value of about 280°C, expected with steam generator fouling corresponding to ageing maturity at mid life of the plant.

The headers are carbon steel with minimum 0.2% Cr.

5.1.3 Heat Transport System Pressure Boundary Design

The reliability of the heat transport system pressure boundary is assured by applying the best currently available technology in design, manufacture, and installation, and by making provision in design and manufacture for monitoring the level of integrity of the pressure boundary at intervals during the life of the plant.

5.1.3.1 Design Bases

The principal safety design objective for the heat transport system is to provide reliable cooling of the reactor fuel under all operating conditions, for the life of the plant and with minimal maintenance. To this end, achieving minimum leakage, maximum reliability and minimum radiation fields, providing good access for personnel, and making provision for maintenance, are assigned high priorities in design.

The heat transport system also provides a barrier to the release of radioactive fission products. It is designed to retain its integrity under normal and abnormal operating conditions.

5.1.3.2 Safety Functions

The system has the following safety functions:

a) Maintain the capability to remove heat from the fuel.

b) During normal operation, provide a barrier to the release of radioactive materials to ensure that doses to plant staff remain within acceptable limits.

5.1.3.2.1 Seismic Qualification

During and after a design basis earthquake (DBE), it is required that the heat transport system maintain its pressure boundary integrity, the heat transport pumps remain free wheeling, and the main circuit maintain its natural circulation capabilities. Steam generators are designed such that during and following a DBE, the equipment maintains its heat transfer capability in addition to retaining structural and pressure boundary integrity.

5.1.3.2.2 Environmental Qualification

Where appropriate, the effects of corrosion and other chemical effects (erosion, deposition, irradiation, vibration, earthquake, fire, immersion, missiles, humidity, ageing, etc.) are considered in design, and adequate design and precautionary measures are provided. All component specifications include applicable requirements on temperatures, pressure, fluid environment, radiation fields, ageing, seismic, and atmospheric conditions including LOCA and main steam line break.

5.1.3.2.3 Fire Protection

The design requirements for fire protection for CANDU nuclear power plants are considered in the system design. Fire protection design in terms of prevention, detection, suppression and mitigation of the effects of fires are provided and addressed in the "Fire Hazard Assessment for the Reactor Building". Provisions are made to minimize fire hazards by limiting combustibles and ignition sources in appropriate areas and by providing fire barriers and fire extinguishing equipment.

5.1.3.2.4 Tornado Protection

The heat transport circuit is designed to maintain the capability to remove heat from the fuel during and following a design basis tornado (DBT). The system is located inside the reactor building, which is capable of withstanding a DBT including missile impact, wind load and differential pressure.

5.1.3.2.5 Operating Conditions

The operating conditions considered in the design of the heat transport system are listed below. Temperatures, pressures, and other parameters change from one location to another in the heat transport main circuit for each operating condition. Descriptions of the operating conditions, including the design loading combinations and associated stress or deformation limits for a particular location in the heat transport main circuit, are given in the technical specification for the component closest to the location.

a) Normal Operating Conditions (Level A Service Limit)
   - Operating at 100% reactor power - continuous
   - Warmup from cold depressurized state and cooldown from zero power hot conditions
   - Reactor startup and shutdown
   - Power manoeuvering

b) Upset Operating Conditions (Level B Service Limit)
   - Reactor trip from 100% power
   - Turbine trip (loss of offsite load)
   - Reactor stepback
   - Loss of regulation/reactor overpower
   - Loss of Class IV power from 100% power
   - Rapid cooldown
   - Loss of pressure and inventory control during warmup
   - Total loss of feedwater from 100% power

c) Emergency Conditions (Level C Service Limit)

- System overpressurization
- Heat transport pump shaft seizure
- Loss of Class IV power with DBE
- Loss of Class IV power with shutdown system 1 (SDS1) failure
- Reactor overpower/loss of regulation with SDS1 failure
- Total loss of feedwater from 100% power with SDS1 failure
- Small loss of coolant

d) Faulted Conditions (Level D Service Limit)

- System overpressurization with SDS1 failure
- Pump shaft seizure with SDS1 failure
- Loss of Class IV power with DBE and SDS1 failure
- Main steam line break
- Feedwater line break
- Loss of coolant (large break)

e) Test Conditions

- Hydrostatic test
- Leak test
- Hot conditioning
- Commissioning without fuel

5.1.3.3 Overpressure Pressure Protection

5.1.3.3.1 System Boundaries

The boundaries of the heat transport system extend to the first isolation valve of all interconnecting systems. There are no valves within the heat transport system; all components are, therefore, protected by the relief devices.

5.1.3.3.2 Overpressure Protection Methods

Overpressure protection for the heat transport system is provided by liquid relief valves in conjunction with shutdown systems No. 1 and 2 (Sections 7.2.1, 7.2.2). With the reactor at power, overpressure protection is provided by the two protective shutdown systems. Each shutdown system acting alone, is capable of preventing the failure of the heat transport system

due to overpressure. The regulating system also acts to minimize pressure transients, but it is not credited in the overpressure protection analysis.

5.1.3.3.3 Relief Devices

- Description:

  The heat transport system is provided with two 100% liquid relief valves connected to the reactor outlet header at one end of the reactor. The valves are fully instrumented globe valves. The discharge from the relief valves enters the bleed condenser.

  The bleed condenser is protected from overpressure. Pressure relief from the bleed condenser is by two spring loaded relief valves.

  Pressure relief for the pressurizer when it is isolated from the heat transport circuit is provided by duplicated and fully instrumented relief valves which also discharge into the bleed condenser (see Section 5.2.1 for more details).

- Capacities and Pressure Setting

  The liquid relief valve capacity is determined by considering postulated process failures, which lead to a pressurization of the heat transport system when the reactor is not at power. In all cases, it is assumed that the bleed condenser pressure is at the set point of its relief valves plus accumulation.

  The liquid relief valves are sized such that each valve capacity is adequate to prevent HTS overpressurization.

  Pressure transmitters for the instrumented liquid relief valves are located in the reactor outlet headers. The valves are actuated by high pressure in any outlet header. The set point for the liquid relief valves is chosen to ensure adequate overpressure protection of the HTS while providing adequate operation margin.

  Since the HTS temperature is still sufficiently higher than the lowest allowable temperature, the design margin will ensure that the pressure boundary behaves in a non-brittle manner during the HTS overpressurization at low temperature operation.

- Independence and Redundancy

  Two 100% instrumented liquid relief valves are provided; the connecting pipes to the bleed condenser are also independent.

  The sensing and control for the instrumented liquid relief valves have the same redundancy and independence as the shutdown systems.

- Failure Positions

  The liquid relief valves fail open on loss of air to the actuator and on loss of electrical power. To ensure reliability, each valve is actuated by two pilot solenoid valves on different power supplies. The valve will open if one or both of the two solenoids is energized. The valves and/or control circuit are required to be regularly tested.

5.1.3.4 In-Service Inspection

Periodic inspection is the mandatory inspection carried out on nuclear plant equipment whose failure could cause a radioactive hazard. Inaugural inspection is the pre-startup phase of periodic inspection providing data on initial conditions.

The inspection program follows the requirements for the heat transport system.

The components in the heat transport system which are subject to inspection include the pumps, the steam generator primary side, the reactor headers, and the main piping within the heat transport system pressure boundary.

5.1.3.5 Heat Transport System Boundary Leakage Detection Systems

Because of potential radiological hazards, minimizing leakage and emphasizing leakage detection are important aspects of the design.

To minimize leakage from the heat transport system, wherever possible, all components are interconnected by an all-welded piping system. Some components require flanged openings and these are suitably gasketted to minimize leakage.

The whole of the heat transport system and its auxiliaries are located within the pre-stressed concrete containment structure, and the majority of the systems are within the dry vault. Any leakage within this vault increases the dewpoint of the recirculating air and is detected.

Facilities are provided to collect leakage from flanged mechanical joints, and pump shaft glands.

The following systems are used to monitor for and detect reactor coolant leakage during normal plant operation, primarily to permit plant personnel to monitor process variables and take required actions:

1. HT System Inventory Monitoring: Water leakage from the HT system is detected by monitoring of the coolant storage tank level. A reduction in the water level which does not reflect the normal pattern of level variations, or changes in the systems inventory, are alarmed and annunciated to the control room operator.
2. Steam Generator and Heat Exchangers Tube Leak Detection Method: One set of potential leakage paths from the HT system is to the steam generator secondary side, or to the light water side of various heat exchangers. Radioactivity in light water monitoring devices monitor the steam generator and heat exchanger tubes and analyze the concentration of radioactive element in light water for detecting primary coolant leaks. High dose and analyzer failure are alarmed in the control room.
3. Annulus Gas System: Dry carbon dioxide gas is supplied to the annuli between the pressure tubes and the calandria tubes. The dewpoint and rate of change of dewpoint for the recirculated gas is continuously monitored. Sampling and analyzing the gas for moisture content provides a means for leak detection from the pressure tubes.

4. H_2O Leakage Collection System: The H_2O leakage collection system collects leakage from HT system components. Connections are provided to collect leakage from flanged mechanical joints and pump shaft glands.

5.1.4 HTS Component Design

The general description given in Section 5.1.2 describes the important design, performance characteristics and safety functions for systems and components. Additional information is given in this section.

5.1.4.1 Fuel Channels Assembly

The HTS is arranged in one closed circuit. 292 reactor fuel channels are connected by inter-connecting piping between two reactor inlet headers (RIH), and two reactor outlet headers (ROH).

For design bases, pressure boundary design and more detailed description of fuel channel assembly refer to Section 4.1.2.

5.1.4.2 Steam Generators

5.1.4.2.1 Design Bases

a) Functional Requirements

1) To transfer heat from the heat transport system to the feedwater from the turbine cycle for the purpose of generating steam at conditions appropriate for power production.
2) To be capable of sustained operation at any power level between 0 and 100 percent of rated output.
3) To be able to operate under cyclic conditions, for the operating modes.
4) To transfer heat from the heat transport system to the emergency feedwater during postulated accident conditions in which this water is utilized.
5) To store an appropriate amount of liquid H_2O in the secondary side of the steam generator for reactor control and safety reasons.
6) To provide a reliable pressure boundary between the heat transport system and the feedwater circuits for normal and abnormal modes of operation.
7) To maintain both primary and secondary pressure boundaries and heat sink requirements during the design basis earthquake.
8) To maintain primary pressure boundary integrity during postulated pipe break accidents.
9) To allow thermosyphon cooling of primary coolant at decay power levels. Thermosyphoning capability of steam generators is demonstrated during commissioning tests.

10) The steam generator is designed to meet the mechanical loads for normal operation, transient and accident conditions including commissioning conditions.
11) The steam generator is required to produce steam at a normal quality of 99.9% quality or higher at the steam outlet nozzle, for any steam flow up to 106% of rated condition with the water level in the drum within its operating range.
12) The emergency feedwater will be supplied from the reserve water system at high elevation into the secondary side of the steam generator to remove decay heat following a total loss of feedwater and/or steam line break.
13) The steam generator internals in the preheater region are designed to withstand low temperature feedwater conditions during the various transient operating conditions.
14) The blowdown design follows good engineering practice of providing the best possible flowrate to remove suspended materials from the recirculating water at the point of highest concentration.
15) The steam generator must satisfy a number of water storage requirements based on safety, control and production reliability considerations. The steam generator and drum design must ensure that the swell/shrinkage between 100% and zero reactor power levels is minimized and contained within the drum to the extent possible by incorporating a large drum volume and a small riser volume.
16) The level of radiation present in the steam generator during operation will not cause damage to materials normally used for steam generator construction. However, the build-up of long term fields will be such that access via the man-holes for inspection and repair will be difficult. The design shall take account of this and be such that minimal maintenance of internal components will be required for the steam generators.

5.1.4.2.2 Design Description

The primary side of the steam generator consists of the steam generator primary head, the primary side of the tubesheet and the tube bundle. A welded divider plate separates the inlet half of the steam generator head from the outlet half. The U-tubes are welded to the primary side of the clad carbon or low-alloy steel tubesheet and rolled into it. The steam generator head is carbon steel and is provided with two manways (one on each side of the divider plate).

At full power, reactor coolant enters the steam generator primary head as a low quality steam-water mixture; as the flow passes through the tubes, the steam is condensed and cooled so that the water leaving the steam generator is subcooled.

The secondary side of the steam generator consists of the shell, the steam separating equipment, the tube bundle shroud, the secondary side of the tubesheet, the secondary side of the tube bundle, the preheater baffles, and the tube support plates. The steam drum is provided with a manway and connections for water blowdown and water level measurements.

Incoming feedwater is pumped into the baffled preheater section and flows over the primary outlet portion (cold leg) of the U-tube bundle in a cross flow pattern. The feedwater emerges

from the preheater section at saturation temperature and mixes with the recirculated saturated water flowing upward from the hot leg of the U-tube bundle.

The flow passes through the flow holes around each tube in the tube support grids. The tube bundle is designed to prevent damage due to vibration from fluid elastic instabilities, random excitation and vortex shedding mechanisms as specified in the steam generator technical specification. The analysis is required to show that the potential for the flow-induced vibration damage of the tube bundle has been minimized in the design, by meeting the following acceptance criteria:

The steam generator is designed and constructed and the tubes supported such that no injurious vibration will occur in service.

The tube U-bends are supported at appropriate locations around the bends. Tube U-bend support design avoids areas of poor circulation and yet can adequately support the tube.

The steam-water mixture rising from the upper end of the U-tube bundle then passes through the steam separators. The separated water recirculates to the tube bundle and the steam leaves the steam generator through the outlet nozzle. The water level in the steam generator is controlled by a combination of level measurement, steam flow measurement and feedwater flow measurements. At the outlet nozzles of each steam generator, venturi flow restrictors are installed to reduce the blowdown rate in the event of a main steam line break.

The steam produced on the secondary side of the steam generator will normally contain a negligible amount of radioactivity. In the event of a tube failure, leakage from the primary side is detected by monitoring the steam for radioactivity, and the reactor is shut down for steam generator maintenance.

Corrosion of the steam generator secondary side is controlled through feedwater chemistry by adding chemicals to the feedwater prior to entry into the steam generator and by continuous blowdown of water from the steam generator secondary side. The feedwater chemistry is controlled to limit dissolved solids, and the feedwater oxygen concentration and pH are controlled to minimize corrosion products.

Provisions for continuous blowdown have been made to remove suspended solids from the secondary side of the steam generators and to control the concentration of dissolved solids in the water.

In addition, openings are provided in the secondary shell of the steam generators to allow mechanical (such as water jet) and chemical cleaning of the secondary side of the tubesheet, the tubes and the tube supports. The size of these openings is consistent with the requirements of water lancing and chemical cleaning equipment currently available in the industry. Sufficient corrosion allowance has been provided in both the primary and secondary side of the steam generator to allow for chemical cleaning.

The steam generator support system consists of a base support, lateral seismic restraints and back-up cable supports. The material for all the supports meets the ASME Code Section III,

subsection NF requirements. It is required to be impact-tested to meet the specifications of the ASME Code. This ensures adequate fracture toughness of the material during operation.

The rupture of any pipe connected to the steam generator is classified as a Level D condition.

The vessel, vessel internals and vessel support attachments are capable of withstanding the primary and secondary pipe (feedwater and steam outlet pipe) ruptures. In particular, the tubing is designed to retain its pressure integrity during and following such an occurrence. Level D stress limits, per NB-3225 of the ASME Code, Section III, are satisfied for tubes and any other pressure boundary region of the steam generator. Requirements for supports are the same as for the pressure boundary.

Seismic loads are combined with pipe rupture and other mechanical loads for the analysis of earthquake induced pipe break cases.

Materials for pressure boundary parts and supports meet ASME Code Section III Class 1 requirements and any additional requirements given in this section. Materials for internal components are selected to suit the functional requirements of the components.

The materials for the internal parts requiring design analysis meet the requirements of the ASME Code Section II. Certified material test reports are obtained for these materials.

Materials designated as in conformance with an ASTM or ASME Standard are tested as required by such standard. Also, for materials using Section III of the ASME Code for design, all the special requirements given in sub-article NB-2000 shall be complied with by the material manufacturers who shall issue a certification to this effect. To accomplish this the supplier shall provide the materials manufacturer with the total heat treatment time and temperature required in the manufacturing process.

Supplier's drawings as well as the steam generators installation, operation and maintenance manual will list the material used.

Materials for all pressure boundary components and the steam generator supports are impact tested. The reference temperature RT_{NDT} shall be -12.2°C (Max.) for pressure boundary components.

The steam generator is designed to allow for sludge lancing. Also, it is designed to allow for a wide range of inspection and repair procedures, as well as chemical cleaning.

Access to the tubesheet region of the steam generator via inspection openings provides access to all parts of the first tube span and to the tubesheet and lowermost lattice support for sludge lancing, video probe, or fibre-optic inspection.

The steam generator is designed to allow for full inaugural and periodic in-service inspection.

5.1.4.3 Heat Transport Pumps

The heat transport pump motor rotor design incorporates additional inertia to prolong the pump rundown time after loss of power. A long rundown time permits core heat removal. The additional inertia is chosen such that the decrease in the rate of flow approximately matches the power rundown following a reactor trip.

5.1.4.3.1 Design Bases

a) To provide continuous circulation of pressurized light water (H_2O) coolant through the reactor fuel channels and the steam generators; the objective is to transfer the heat from the reactor fuel to the light water on the secondary side of the steam generators. The normal operating conditions, rated at 100% reactor power, for a single heat transport pump are given in Section 13.2 (ASI 33100), Table 13.2-1.

b) To maintain the pressure boundary integrity during the entire range of normal operating conditions, during all postulated pipe breaks, loss of coolant accident (LOCA) and during a design basis earthquake (DBE).

c) To continue removal of decay heat from the reactor core during the loss of Class IV power by extended run down time.

d) To provide pump heat energy to assist in the warm-up operation of the heat transport system.

e) To contain the primary fluid (H_2O) inventory with minimal leakage during the pump operation through the pump shaft mechanical seals during all normal and abnormal modes of operation of the heat transport pump.

f) To provide back-up gland injection supply to the mechanical seals in the event of failure of the normal gland injection supplied by HT pressurizing pumps.

g) To consider the effects of critical speeds, shaft stability, bearing performance, shaft seal performance, and other aspects of the mechanical performance of pumps in design for the operating spectrum.

h) The pump and motor is designed for a design basis earthquake (DBE) Category A, such that the pump/motor assembly shall maintain its pressure retaining capability and structural integrity during and following a DBE. The pump and motor bearings shall sustain the earthquake loads without any damage. The pump and motor set may be operating, running down, or at standstill during the earthquake.

i) The heat transport pumps are qualified to operate for defined accident conditions.

j) The pump motor is designed to be protected from fire hazard. Any oil leakage from the oil reservoir is collected in the trays provided.

5.1.4.3.2 Design Description

There are four identical heat transport pumps. They are vertical, single stage, single suction, double discharge centrifugal pumps driven by a directly coupled electric motor mounted above

the pump. A typical pump is shown in Figure 5.1-4. Table 13.2-1 lists the principal parameters of the heat transport pump.

The volute casing is a casting with a single axial suction nozzle at the bottom and two symmetrical, tangential, discharge nozzles, terminating in elbows, for connecting to the header below. The double discharge, besides having mechanical and manufacturing advantages, provides better burst pipe safety analysis results.

Shaft sealing for the pump consists of three mechanical face type seals in series mounted on a replaceable sleeve. The seals are pressure staged so that normally each seal stage takes one third of the system pressure but each is capable of withstanding the full system pressure. A backup seal is provided at the top of the seal flange; besides confining vapour leakage under normal conditions, it contains the gross seal leakage should all three stages seal fail. A removable spacer and pump half-coupling allows space for the seal cartridge to be replaced without removing the motor.

Cooled and purified H_2O is injected into the pump gland from the heat transport pump seal system. Part of the flow is routed up through the seal pressure staging system and the remainder down via the pump volute into the heat transport system. A recirculation system is provided comprising an auxiliary impeller in the pump gland, and an external heat exchanger. Cooling water to the heat exchanger is provided by the recirculated cooling water (RCW) system. This ensures adequate cooling capacity for the pump seals with and without normal gland injection. The seal pressure de-staging coils are integral to the seal cartridge assembly.

The rotor bearing system consists of a water lubricated carbon graphite guide bearing in the pump and tilting pad type, oil lubricated, radial guide bearings at top and bottom of the drive motor. Axial thrust, either up or down, is taken by a double acting, tilting pad type thrust bearing located at the top of the motor. An oil lift system is provided to eliminate any possibility of wear of the motor bearings during the start up and shutdown stages of the pump motor set.

A brake is provided on the motor to prevent rotation of an unpowered pump due to flow initiated by an operating heat transport pump or a long term cooling pump.

Shielding is installed around the pump, at the level of the top of the volute case, to reduce radiation fields for maintenance.

To protect the heat transport pump motor from damage, which would be caused by operating under conditions of insufficient cooling to the bearings, a trip circuit is incorporated, which is initiated by a high temperature of the upper thrust bearings. Another trip also protects the pump from unacceptable vibration.

5.1.4.3.3 Inspection and Testing

The heat transport pump is designed to allow for full inaugural and in-service inspection. The design allows for periodic inspection of all pressure boundary welds. The purpose of the inaugural inspection is to provide the base line data on the condition of various pressure boundary welds and components.

All materials for pressure-retaining components are in accordance with and conform to the specifications for materials in Table I-1.0 of Section III of ASME Code and to all examination and special requirements of Sub-article NB-2000, subject to the exceptions and additions to these requirements as given herein.

The material and design of the pump internal components is suitable for the service conditions and is governed by Appendix "U" of the ASME Code.

All materials are in accordance with ASME or ASTM standards unless there are materials not covered by such standards, but which are suitable for the application.

Materials for all pressure boundary components and the supports are impact tested. The lowest service metal temperature is 21°C.

5.1.4.4 Headers

There are two reactor outlet headers and two reactor inlet headers: one of each at each end of the reactor.

Each reactor outlet header receives flow from 146 outlet feeders and conducts the flow to the dual inlet lines of a single steam generator.

Similarly, each reactor inlet header receives flow from two double discharge heat transport pumps and conducts the flow to 146 inlet feeders.

The header nozzle for the feeders, steam generator inlet lines and pump discharge lines are cold extruded from the header wall. Instrument connections are welded to the headers.

The reactor headers are designed and manufactured from ASME SA 106 Grade C carbon steel.

The upper portion of each feeder is welded to the appropriate header by the feeder manufacturer before the support frames are shipped to site. After the headers are positioned at site and the lower portion of each feeder is field welded to the upper portion, the support frames are removed. Access is provided for inspection of the welds between the feeders and the headers.

5.1.4.5 Piping and Supports

Tees are used for major pipe intersections in the heat transport system. The small connections on large piping use forged nozzle fittings. The number of piping welds is kept to a practical minimum.

The equipment and piping constraints are arranged so that weight is supported and thermal expansion and other movements are accommodated.

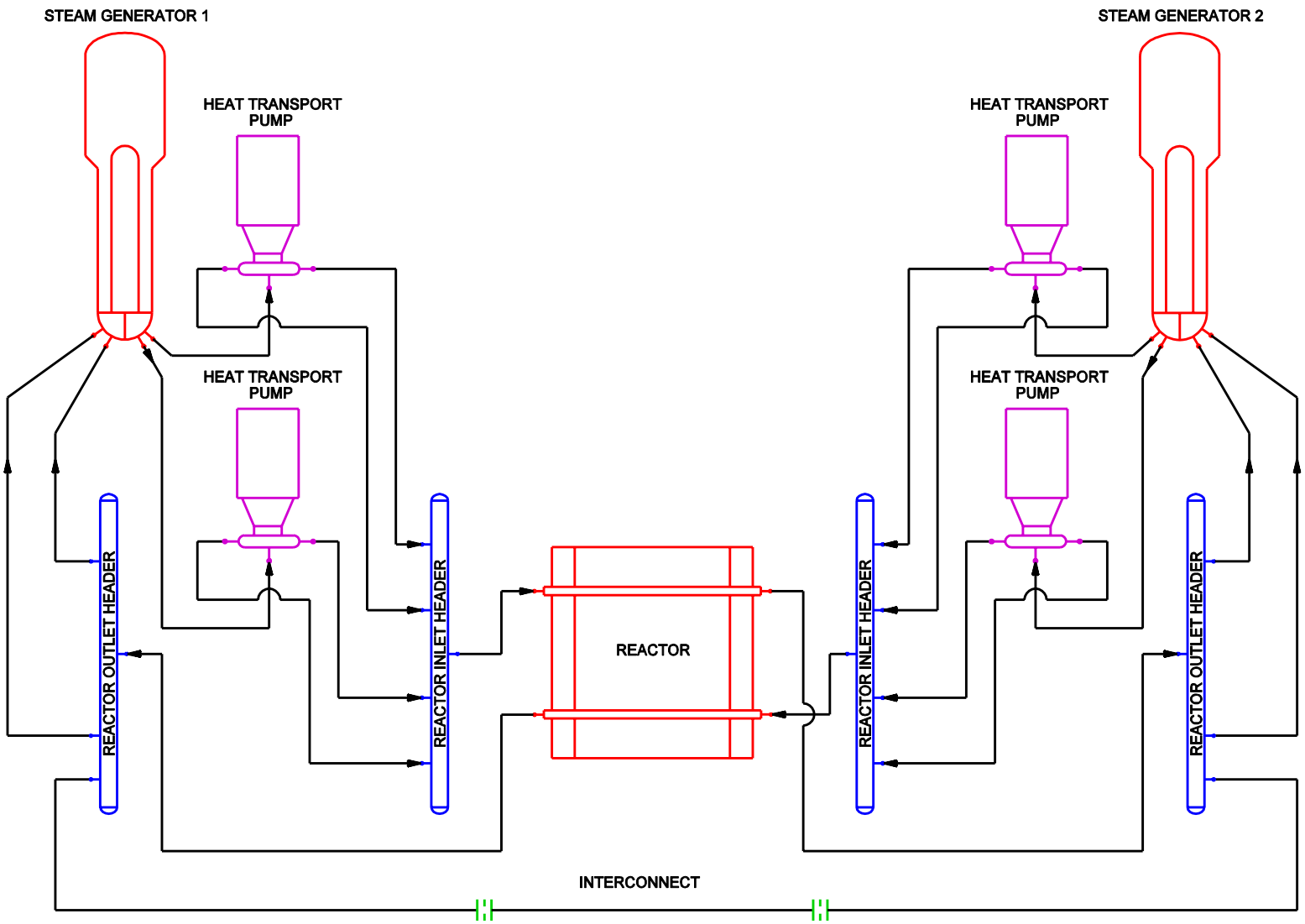

Figure 5.1-1 Heat Transport System Flow Diagram

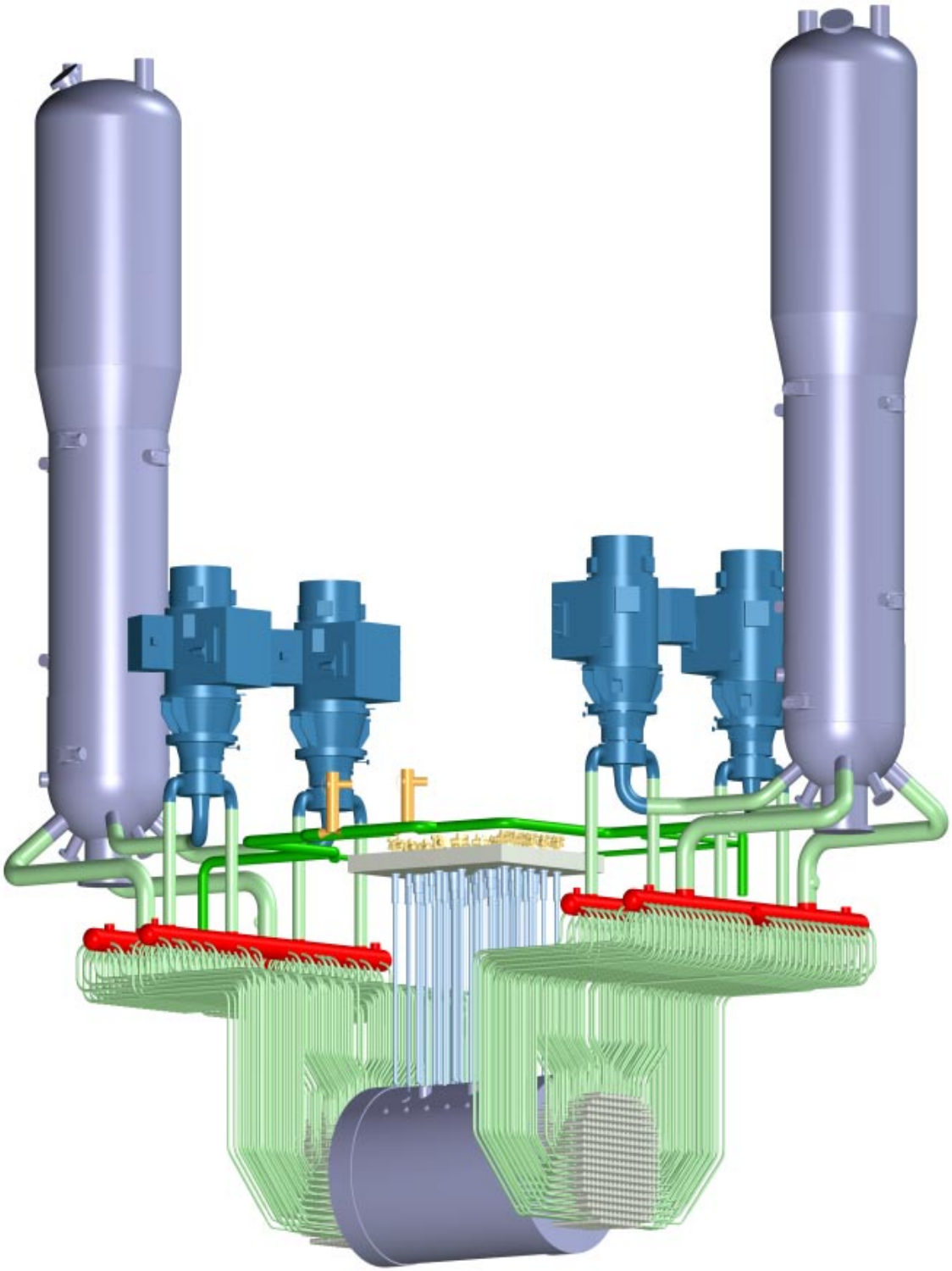

Figure 5.1-2 Heat Transport System Layout

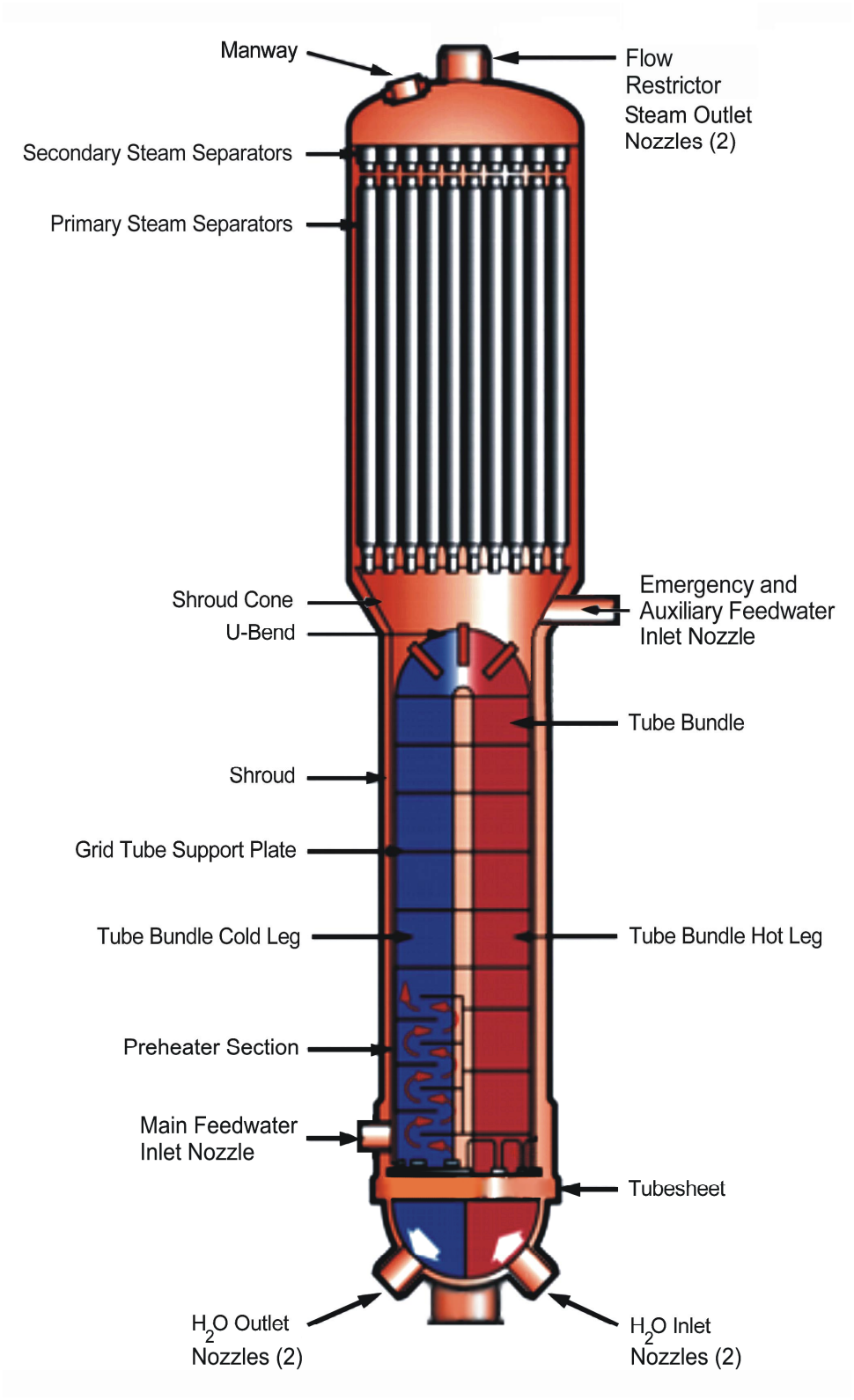

Figure 5.1-3 ACR-700 Steam Generator

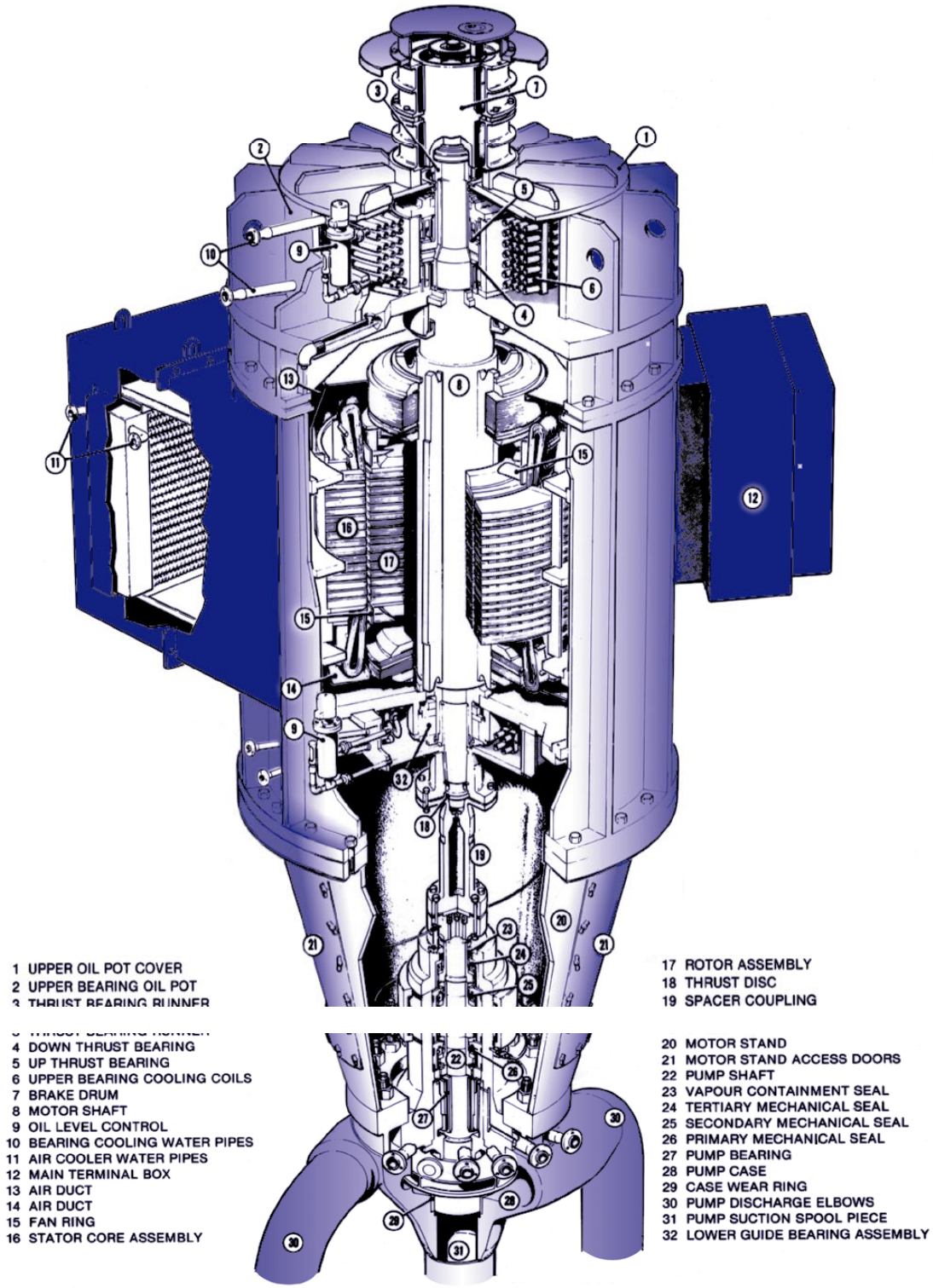

Figure 5.1-4 ACR-700 Heat Transport Pump

5.2 Heat Transport Auxiliary Systems

The heat transport auxiliary systems are directly connected to the HTS and consists of the following:

- Pressure and Inventory Control system
- HT Purification system
- HT Pump Seal system
- H_2O Leakage Collection system

5.2.1 Pressure and Inventory Control System

The heat transport system is a pressurized light water closed loop. The heat transport pressure and inventory control (P&IC) system is designed to provide a means of pressure and inventory control for this closed loop as well as to provide adequate overpressure protection. The control of pressure and inventory is achieved using a distributed control system (DCS). Overpressure protection is independent of the DCS.

The flow diagram of P&IC system is shown in Figure 5.2-1.

5.2.1.1 Design Bases

a) To accommodate the HT coolant swell and shrink associated with warmup, startup, shutdown, cooldown, power manoeuvring and various unit disturbances.

b) To provide adequate relief capacity for overpressure protection of the HT system as well as a means to contain any relief from it.

c) To provide a means of controlling the HT system pressure due to various transients at acceptable values and to limit pressure fluctuation in the HT system over the full range of HT system operating conditions.

d) To provide a means of HT system pressure recovery following sudden power reductions as in the case of a reactor trip or a stepback.

e) To provide a cooling flow of purified H_2O at sufficient pressure and at controlled temperature to the HT pump seal system.

f) To provide a cooling flow to the fuelling machines for refuelling.

g) To limit pressure decrease so as to ensure the adequate NPSH (net positive suction head) for the HT pumps.

h) To provide a means of degassing the HT system coolant.

i) To provide a means of controlling the bleed condenser pressure and liquid level.

j) The isolation valves at the HTS pressure boundary shall be qualified to design basis earthquake (DBE) to ensure that the pressure boundary integrity of the HT system is maintained.

5.2.1.2 Design Description

The pressure and inventory control system is designed to provide a means of pressure and inventory control for the HTS, as well as to provide adequate overpressure protection.

Basically, the system consists of a pressurizer, a bleed condenser, a bleed cooler, and a feed and bleed circuit. The pressurizer controls the pressure of the heat transport loop; the feed and bleed circuit controls inventory in the heat transport system. The bleed condenser is provided to receive liquid relief and bleed flow directly from the heat transport system.

The P&IC system consists of several subsystems described below.

5.2.1.2.1 Pressurizer and Pressure Control Circuit

The pressurizer is a major component of the pressure and inventory control system. The pressure vessel is partly full of coolant in liquid phase with the remainder being saturated vapour in equilibrium with the liquid. During normal operating condition, the pressurizer is connected to the HT system. This is called ‘normal mode’ operation of the HT pressure control system. The reactor outlet header pressure is controlled at the setpoint by controlling the pressure of the vapour space in the upper region of the pressurizer. The pressure is increased by activating the heaters in the vessel and reduced by a controlled spray flow supplied by a line connected to a reactor inlet header. When the HT system is stable under normal conditions one variable heater is used to compensate for pressurizer heat loss. During an upward manoeuvering condition, the pressurizer spray is used to control increasing pressure.

The pressurizer level setpoint increases with reactor power and the water level is automatically controlled at the setpoint by the feed and bleed circuit under the control of the unit computers.

In solid mode, the pressurizer is isolated from the HT system circuit. In this case, the pressure control of the HT system is achieved by feed and bleed. Duplicated and instrumented steam relief valves connecting to the bleed condenser provide overpressure protection for the pressurizer. During a shutdown, the isolated pressurizer normally remains pressurized.

Swell and shrinkage in the heat transport system, during warmup, startup, shutdown and cooldown, are accommodated in the pressurizer and the coolant storage tank, and are compensated for by bleeding from the system via the bleed circuit or feeding into the system via the feed circuit.

5.2.1.2.2 Feed and Bleed Circuit

The feed and bleed circuit is provided for the inventory control of the HT system. The feed and bleed circuit is designed to handle the shrinkage and swell rates which take place during warmup

and cooldown. Two high pressure multi-stage pressurizing pumps are provided, one of which is normally operating with the other on standby.

The bleed flow is discharged from the HT system into the bleed condenser and cooled by a reflux tube bundle with a flow from the discharge of HT pressurizing pumps. By passing through the bleed cooler, the coolant is further cooled down to 66°C (150°F). The water is routed to the heat transport purification system for filtering and purification.

The normal feed flow is taken from HT purification circuit and the coolant storage tank. During some abnormal situations (for example, design basis events such as relief valve failure, small loss of coolant accident, etc.), the heat transport system pressure falls and the HT pressurizing pump flow subsequently increases. In order to avoid the pressurizing pump from tripping due to low suction pressure, override of the feed valves is provided such that the feed valves begin to throttle to reduce the flow.

During normal operation, the pressurizing pump also supplies purified coolant flow to the fuelling machines via a booster pump for the refuelling operation.

5.2.1.2.3 Pump Seal Supply Flow

The HT pressurizing pump supplies a controlled cooling flow to the HT pump seals.

5.2.1.2.4 Bleed Condenser Circuit

During normal reactor operation, the bleed flow is directed into the bleed condenser tank. In addition, a flow is provided from the discharge of the HT pressurizing pumps to the reflux tube bundle to assist in controlling the vessel pressure and the liquid temperature.

Two bleed condenser level control valves downstream of the bleed cooler control the outflow from the bleed condenser tank in order to maintain a constant tank level. The bleed cooler is provided to reduce the high temperature of the outlet flow from the vessel.

A temperature of 66°C (150°F) at the outlet of the bleed cooler is acceptable from the standpoint of the pump seal cooling flow temperature, HT purification temperature and the pressurizing pumps' net positive suction head. A temperature override is provided on the level control valves. In addition, the two level control valves are designed to close automatically on high coolant storage tank level, to ensure bottle-up of the bleed condenser to back up the temperature override valve closure action.

The level control valves are on the DBE pressure boundary of the HTS and will be closed during such an event.

A vent connected to the bleed condenser tank is provided to remove non-condensable gases (nitrogen and other gases) and to bleed off to the off-gas system.

Cooling water flow through the bleed cooler is supplied by the recirculated cooling water (RCW) system. A continuous flow is required to prevent boiling of the RCW.

5.2.1.3 Overpressure Protection

The two liquid relief valves in conjunction with the SDS1 and SDS2 systems provide overpressure protection for the heat transport system. The valves are actuated by triplicated pressure measurements.

5.2.1.4 Component Description

5.2.1.4.1 Pressurizer

The pressurizer is a vertical cylindrical vessel, which is connected to the HTS at one of the steam generator inlet lines. Flow to and from the HTS is through a nozzle at the bottom of the vessel.

A spray valve station connects the top of the pressurizer to one of the reactor inlet headers. The pressurizer spray controls the pressure in the vapour volume of the pressurizer.

There are 5 electric heaters located at the bottom of the vessel. Two of them are variable heaters. The other heaters operate as on-off types. One variable heater is required to operate to compensate for pressurizer heat loss during normal operation.

In shutdown conditions, the pressurizer is isolated from the HT system circuit by a motorized isolation valve in the interconnecting line. Duplicated and instrumented steam relief valves at the top of the pressurizer provide overpressure protection for the vessel.

The pressurizer accommodates the HTS swell and shrinkage between the reactor hot conditions at zero power and full power.

5.2.1.4.2 Bleed Condenser and Bleed Cooler

The condenser is a vertical cylindrical vessel with a reflux tube bundle. The condenser receives steam relief from the pressurizer and liquid relief, bleed and degassing flow directly from the heat transport system. In normal operation, the cooling flow supplied from the HT pressurizing pump flows through the reflex tube bundle, and cools and condenses the bleed flow, thus controlling the pressure of the vessel and recovering significant portion of the heat. The liquid flows through the bottom nozzle of the condenser tank to the bleed cooler. The level in the condenser is controlled by the two level control valves.

The bleed cooler is a horizontal shell-and-tube type heat exchanger. It is used to cool the water, that flows from the bleed condenser to HT purification system.

5.2.1.4.3 Coolant Storage Tank

The coolant storage tank is a vertical cylindrical tank. It connects to the suction side of the HT pressurizing pumps and acts as the head tank for the feed circuit. The coolant storage tank together with the pressurizer is designed to accommodate the swell and shrinkage from the HTS during warmup and cooldown.

5.2.1.4.4 Liquid Relief Valves

Two instrumented relief valves provide overpressure protection for the HT system main circuit. During reactor operation, the instrumented relief valves operate in conjunction with the reactor safety systems to limit abnormal transient pressures in the HT system.

5.2.1.4.5 Bleed Condenser Relief Valves

Two spring loaded relief valves on the bleed condenser provide overpressure protection for the vessel as well as the heat transport system. The relief set pressure is selected at above the normal operating pressure of the reactor outlet headers to preclude any spills from the bleed condenser in case of spurious liquid relief valve opening.

5.2.1.4.6 HT Pressurizing Pumps

The two HT pressurizing pumps are horizontally mounted, high pressure multi-stage, 100% capacity pumps.

5.2.2 Heat Transport Purification System

The heat transport (HT) purification system is provided to keep the heat transport clean, that is, free of impurities which may be hazardous to the operation and maintenance of the station. These impurities include radioactivated corrosion products, fission products, non-active ionic impurities and particulate matter.

The heat transport purification system is designed with the necessary equipment and chemical reagents to allow maintenance of the chemistry of the HT system within specifications.

The flow diagram of the HT purification system is shown in Figure 5.2-2.

5.2.2.1 Design Bases

a) Control the concentration of fission products (iodine) released from fuel defects.

b) Minimize the build-up of radioactivated corrosion products around the HT circuit.

c) Maintain proper pH control of the coolant.

d) Monitor and provide manual adjustment to achieve the desired maximum flow rate.

e) Monitor the differential pressure across the filter, ion exchanger columns and strainers to detect crudding.

f) Provide for purification to the HT system during shutdowns.

g) Remove suspended crud and ionic derivatives from the HT system.

h) Filter the bleed flow from the HT system via the bleed condenser based on the minimum purification half-life requirement.

5.2.2.2 Design Description

The purification system limits the activity and corrosion product buildup in the reactor coolant by removing soluble and insoluble impurities, and by maintaining the pH of the coolant at the required value. It can also remove crud at a high rate following a crud burst caused by a chemical, hydraulic, or temperature transient. In this manner the activity buildup due to active corrosion products can be minimized.

The HT Purification system consists of a filter in series with two parallel ion exchangers. The filter is used to remove insoluble impurities. The filtrate at the outlet of the filter flows into the two ion exchangers with resins which remove soluble impurities and maintain the water chemistry specifications in the HTS. A filter bypass is provided to facilitate the filter element replacement, while the purification process can continue with the two ion exchangers.

The heat transport purification system is connected to the heat transport circuit via the bleed condenser and the bleed cooler. Flow is bled from the suction side of one HT pump into the bleed condenser. The purification flow is taken from the outlet of the bleed cooler and the purified water is returned to the HT pressurizing pump suction lines connected to the coolant storage tank in the normal operation mode.

This purification configuration is used when the HTS is in the shutdown mode of operation. The inlet flow is taken from the outlet of the long term cooling heat exchangers and the purified coolant is returned to the heat transport system via the long term cooling pump suction lines.

When the pressure differential across the filter exceeds the allowable limit, the filter elements must be replaced, in order to maintain the filtration process. A high pressure differential across the ion exchangers is the indication of clogged inlet flow distributor/outlet screen in the ion exchangers or the gradual formation of resin fines due to attrition resulting in the gradual compaction of the resin bed causing resistance to purification flow. The spent resin in the ion exchangers should then be replaced with new resin.

5.2.3 Heat Transport Pump Seal System

The HT pumps circulate pressurized, high temperature light water through the HT system. These pumps are vertical, single stage, single suction, double discharge, double volute, centrifugal pumps. Each pump has a gland, in which a system of shaft seals (three mechanical seals and a backup seal) is located to prevent leakage from the HT system. Due to the sensitivity of these seals to possible damage from system particulate matter and high temperature, a separate gland seal cooling system is required to satisfy the functional requirements listed in the next section.

The flow diagram of the heat transport pump seal system is shown in Figure 5.2-3.

5.2.3.1 Design Bases

a) To provide a clean, cooled and pressurized supply of light water to each pump gland for gland cooling when the HT system is pressurized.

b) To provide a backup flow from the heat transport pump casing in the event of normal injection flow failure.

c) To provide a return line to channel the staging flow from the pump gland through seal throttle to the HT pressurizing pump suction.

d) To detect a failure of any of the three mechanical seals.

e) To be seismically qualified to design basis earthquake (DBE) in order to ensure that the pressure boundary of the heat transport system is maintained following DBE.

f) To withstand harsh environmental conditions following a loss of coolant accident (LOCA) or main steam line break (MSLB) in order to provide cooling to pump seals for seal integrity.

5.2.3.2 Design Description

The HT pump gland houses the sealing arrangement, auxiliary impeller and the pump bearing. A supply of cool and clean high pressure water is required to flow through the gland for cooling and lubricating the seals and bearing.

The gland seal circuit consists of a take-off from the HT pressurizing pump discharge line feeding into four heat transport pump glands. The normal constant injection provides for the gland staging flow, and the flow is directed to the pump casing via the restriction bushing located between the casing and the pump gland.

Each injection line contains a manual isolating valve, a pressure-reducing device and a flowmeter with a low flow alarm. The flowmeter is used to monitor the flow to each pump gland and to alarm when the cooling flow is low.

The pressure-reducing device controls the magnitude of the injection flow, and is designed to provide the required flow during normal reactor operating conditions. For abnormal operating conditions when pressure differential is less than the normal minimum, the backup supply will be activated.

The injection water mixes with a recirculation flow, passes through the external heat exchanger and then enters the pump at the face of the lower seal and above the auxiliary impeller. The heat exchanger is provided with a cooling water flow from the recirculated cooling water (RCW) system. The RCW supply to the HT pump gland circuit is available following the loss of Class IV power, upon the Class III power establishment.

A small amount of flow is maintained through the seals to provide lubrication and cooling. The remainder of the flow is recirculated by the auxiliary impeller, and part of this flow passes through the restriction bushing into the HT pump volute case. This flow prevents high temperature primary coolant from entering the seal cavity.

The shaft sealing arrangement consists of three mechanical seals in series and a backup seal. Three seal throttles provide equal pressure drops across each of the three seals. The staging flow is directed to the suction of the HT pressurizing pump via the gland return lines. A leakage collection cavity, located above the third mechanical seal, provides for drainage of seal leakage

to the H_2O leakage collection tank. The backup seal is located above the leakage collection cavity to prevent leakage from the cavity to the motor stand. A drain from the stand to the H_2O collection tank is provided in case of leakage through the backup seal.

In the event that injection flow is lost, a backup supply of primary coolant for the gland is provided by outflow from the HT system via the HT pump casing. The hot outflow is mixed with the recirculation flow from the auxiliary impeller and flows through the external heat exchanger for cooling before it is returned to the gland. The staging flow through the gland remains the same as the normal mode of operation, although the temperatures are somewhat different.

5.2.4 H_2O Leakage Collection System

The H_2O leakage collection system is provided to collect leakage from the heat transport mechanical components, and to receive H_2O drained from equipment prior to maintenance. The collected H_2O, if not contaminated, is pumped to the coolant storage tank of the P&IC System. The major components of the H_2O leakage collection system are a collection tank, cooler, and pumps.

The flow diagram of H_2O leakage collection system is shown in Figure 5.2-4.

5.2.4.1 Design Bases

a) To collect heat transport system water leakage from equipment.

b) To provide a means of venting equipment.

c) To cool and transfer the collected water, if not contaminated, to the pressure and inventory control (P&IC) system.

d) To transfer the collected water, if contaminated, to the radwaste liquid management system for cleanup and storage.

e) To monitor the water leakage and drainage flows.

f) To provide connections to enable sampling of the collected water.

g) To provide alarm upon detection of water in the drain lines of HT system pumps motor stand and H_2O collection tank support floor.

h) To transfer HTS inventory to the H_2O Supply systems for temporary storage during plant shutdown.

5.2.4.2 Design Description

The H_2O leakage collection system collects water leakage, drainage and vented gases from equipment in the heat transport and auxiliary systems. Provision is made for monitoring the water flows and pumping the collected water either to the HT Purification system or, if contaminated, to the radwaste liquid management system. Except for the pumping facility, flows in this system are propelled by gravity.

Collection points are equipment drains and vents, pump seals and intergasket cavities. Collected flows are in part from high pressure, high temperature circuits; such flows will flash when entering the collection system, which operates at low pressure.

The collected water flows by gravity through a multiple inlet type flow gauge for visual monitoring. Leakage indicators are used for monitoring leakage flows from HT pump seals. Sight glasses are used for monitoring drainage from equipment drain and vent valves during maintenance and also for monitoring leakage through these valves during reactor operation.

The water collected in the H_2O collection tank is pumped out by the H_2O collection pumps. The purity of the collected H_2O is determined by periodic sampling.

For a normal pump-out of collection tank contents to the P&IC system, the pumps and power-operated discharge valve operate automatically in response to tank level signals. The discharge valve is designed to fail open so that in case of loss of power to the valve, the collection tank contents can be returned to the P&IC system, via the HT Purification system.

The system is designed to transfer the purified HTS coolant to the H_2O Supply tanks during the plant shutdown when draining to the header level is required to facilitate maintenance of the HT pumps and Steam Generators.

All piping and components of the H_2O leakage collection system are constructed of stainless steel. Stainless steel is used to reduce the generation of corrosion products.

5.2.5 Steam and Feedwater System

The steam and feedwater system is composed of the main steam lines and the feedwater supply to the steam generators. The main steam lines supply steam from the two steam generators in the reactor building to the turbine through the steam balance header at a constant pressure. Also at the outlet nozzles of each steam generator, venturi flow restrictors are installed to reduce the main steam line break pressure inside the RB containment. The system controls the feedwater flow to maintain the required steam generator level. The system controls the steam generator pressure using the condenser steam discharge valves (CSDVs) and the atmospheric steam discharge valves (ASDVs). Main steam safety valves (MSSVs) are provided for overpressure protection of the steam generator secondary side. The feedwater system takes hot, pressurized feedwater from the feedwater train and discharges the feedwater into the preheater section of the steam generators. Main steam isolation valves (MSIVs) are provided to limit blowdown to one steam generator in the event of a steam line break to limit containment pressure and also to isolate the main steam supply to the turbine in the event of steam generator tube leak, after reactor shutdown when the long term cooling system is placed in service and the heat transport system is depressurized.

The flow diagrams of steam and feedwater systems are shown in Figure 5.2-5 and Figure 5.2-6.

5.2.5.1 Design Bases

The steam and feedwater system has the following functional requirements:

a) The system supplies steam produced in the steam generators to the turbine generator, turbine gland steam sealing system, second stage reheaters, and auxiliary steam for deaerator.

b) Venturi flow restrictors are installed at the outlet nozzles to reduce the containment pressure due to MSLB to an acceptable value.

c) The ASDVs, CSDVs, turbine speeder, and reactor power shall be used to control steam pressure.

d) ASDVs shall be designed to dump steam to atmosphere during plant warmup, when the main condenser is unavailable or Class IV power is lost.

e) CSDVs shall be designed to dump steam directly to the condenser during balance of plant (BOP) upsets (e.g. turbine trip, loss of line) without causing the reactor to trip or the MSSVs to lift.

f) The main feedwater pumps shall continue to operate at full capacity following a turbine trip and pressure decrease at the deaerator. The standby main feedwater pump shall be started automatically in the event of a failure of an operating pump.

g) Two 4% capacity auxiliary feedwater pumps operating on Class III power shall be provided. One auxiliary feedwater pump shall be started automatically in the event of tripping that all main feedwater pumps trip. The condensate system shall be capable of maintaining the level in the deaerator storage tank when the auxiliary feedwater pump is in operation.

h) The system shall have suitable instrumentation as required for steam generator level and pressure control.

i) Strict control of steam generation water and feedwater chemistry shall be provided to protect the integrity of the steam generator tubes that separate the reactor coolant from the H_2O feedwater and steam systems.

j) MSSVs shall be provided to remove heat from the fuel, or rapidly depressurize the HT system during accident conditions, and to provide overpressure protection of the steam generator secondary side.

k) On a low steam generator level, conditioned with low feed water pump discharge pressure, auto depressurization shall be initiated. Depressurization shall be accomplished by opening the MSSVs to allow emergency feedwater supply make-up from the reserve water system (RWS).

l) The MSSVs shall be opened by the emergency core cooling system (ECCS) on an ECI signal (low pressure in the HT system combined with high pressure inside containment, high moderator level, or sustained low HTS pressure signal), following a time delay to crash cool the secondary side of the steam generators. This is to ensure rapid cooldown of the steam generators to depressurize the HT system and facilitate the emergency core injection.

m) The MSSVs shall be opened by the second steam generator crash cooldown system (on low reactor outlet header pressure combined with high Reactor Building pressure, high moderator level, or sustained low reactor outlet header pressure signal) following a time delay to crash cool the secondary side of the steam generators. This is to provide the steam generators with rapid cooldown, which is initiated independent of the ECCS in the event of a LOCA.

n) The capacity of the ASDVs shall be equal to at least 10% of the normal steam flow.

o) The capacity of the CSDVs shall be equal to steam flow corresponding to 100% reactor power following 100% load rejection. The turbine bypass system shall be sized to permit a continuous steam flow to the condenser of up to 75% of full steam flow.

p) There shall be a provision for automatic and/or remote manual operation of the MSIV on the individual steam line from each steam generator in the event of a main steam line break and to minimize the discharge of radioactive steam into the atmosphere or BOP systems in the event of steam generator tube leaks after the reactor is shut down.

q) With one main control valve per feedwater line wide open, the operating main feedwater pumps (excluding the standby pump) shall be capable of delivering at least 110% of MCR feedwater flow into the steam generators.

r) In the event of a main steam line break, the feedwater control valves shall limit the feedwater flow to prevent the main feedwater pumps from tripping.

s) In the event that the normal feedwater is unavailable, an emergency water supply shall be provided.

t) To ensure rapid automatic starting of the standby and auxiliary feed pumps, all services to the pumps shall be kept active (e.g. idle pumps shall be kept warm by warm-up flow circulation; lube oil cooling system and gland seal system shall be in service).

5.2.5.2 Design Description

Steam is produced in the two steam generators and fed into four separate steam mains, which pass through the reactor building wall and are routed to the turbine building where they connect to the turbine steam chest.

Main steam safety valves are provided in each steam main to protect the steam generators from overpressure and to remove heat from the fuel during accident conditions. Condenser steam discharge valves are also provided to discharge live steam to the turbine condenser and discharge steam during severe transients, such as loss of line or turbine trip, to avoid activating the main steam safety valves. Atmospheric steam discharge valves are used to control steam generator pressure and to provide a heat sink when the main condenser is either unavailable or inadequate.

One main steam isolation valve is installed on each steam line, downstream of the main steam safety valves and upstream of the atmospheric steam discharge valve, to isolate the steam generators for certain postulated scenarios involving main steam line breaks and steam generator tube leaks.

Provision is made to measure the steam flow rate in each steam main. Connections are provided for steam sampling and nitrogen gas addition.

Feedwater from the regenerative feed heating system is supplied to the steam generators through two separate feedwater mains.

The steam generator blowdown system is provided to control impurities in the steam generator.

5.2.5.2.1 Steam Flow System

The normal operating condition of the steam and feedwater system is given in the unit data list in Section 13.

Each steam generator is connected by two steam pipes penetrating the reactor building to the main steam header in the turbine building. The piping material is carbon steel.

Each steam line has two MSSVs, one MSIV and one ASDV. Each ASDV is provided for steam rejection under conditions when the turbine condenser is unavailable. CSDVs are provided to discharge live steam from the main steam header to the condenser.

Steam generator tube leakage will be indicated through monitoring of the radiation level emitted by N^{16} isotope in the steam lines and steam generator blowdown samples through the feedwater sampling system.

5.2.5.2.2 Feedwater Circuit

The feedwater is demineralized and preheated light water. The feedwater piping carries the feedwater from the deaerator through the steam generator feed pumps, high pressure feedwater heaters, and the feedwater control valves, to the steam generators.

Two feedwater mains run from the turbine building into the reactor building. Each main connects to one steam generator. Each feedwater main is equipped with a swing check valve located on the steam generator platform. This valve prevents back flow of feedwater out of the steam generator on a loss of feedwater supply.

Two 110% feedwater control valves with isolating valves are provided in each feedwater main. A smaller control valve is provided in parallel with the main feedwater control valves and is used during low flow operation. Flow elements measure feedwater flow rate to each steam generator. Flow measurement is required for gross power determination and for steam generator level control.

If normal feedwater to the steam generators is unavailable, the reserve water system provides emergency water coolant to the steam generators for long term decay heat removal. Supply line to each steam generator is provided for this purpose. A check valve in each line prevents backflow and circulation between steam generators during normal plant operation.

5.2.5.2.3 Steam Generator Blowdown Circuit

The steam generator blowdown circuit is provided to control the impurities in the steam generators.

Impurities from the steam generator, and those which originate in the make-up feedwater and condensate systems, and concentrate in the steam generator, are removed from the steam generator by the blowdown flow. Any system leakages in the form of either steam or water are replaced by high quality demineralized make-up water supplied from the reserve feedwater storage tank of the condensate system.

In order to accomplish this, provision has been made for a continuous blowdown from the tube-free lane area, the steam generator downcomer hot-leg area, and steam generator downcomer cold-leg area.

The steam generator blowdown system consists of one set of piping from each SG to the flash tank with the respective isolation valves, one flash tank, interconnecting piping to the dearator and two separate trains for conditioning the recovered blowdown liquid. Each conditioning train consists of one heat exchanger and one electro-deionization unit, which replaces the traditional mixed bed ion exchange column in terms of water purification. Crossties are available between trains to improve operational reliability of the system.

The blowdown water is drawn from the lower portion of each SG and directed to the flash tank. The flash tank produces two streams; one stream, which is directed to the dearator and the other is the liquid portion, which is cooled down in the plate type heat exchanger and then purified in the electrodeionization unit. The purified liquid stream is then discharged into the main condenser well.

5.2.5.3 Component Description

5.2.5.3.1 Steam Generators

Two identical steam generators of the recirculation type with integral preheaters, generate steam by heat transfer from the primary coolant on the heat transport side to the light water on the secondary side. The steam generators consist of an inverted vertical U-tube bundle installed in a shell. Steam separating equipment is housed in the upper end of the shell (see Section 5.1.4.2 for more details).

The steam generator design is improved for better control of the steam generator level during normal plant operation. The large steam generator inventory has an effect on trip coverage analysis, and analysis of the peak pressure in containment following a steam line break in containment.

5.2.5.3.2 Venturi Flow Restrictor

Each steam generator outlet nozzle contains an internal venturi flow restrictor arrangement, to limit flow in the event of main steam line break. Under this scenario, the flow restrictor limits rapid rise in containment pressure. The restrictor is sized to minimize the unrecovered pressure loss across the restrictor during normal operation.

The venturi flow restrictor installation in each SG nozzle results in reduction of containment pressure in the event of a MSLB.

5.2.5.3.3 Main Steam Safety Valves (MSSV)

A total of eight spring loaded and pneumatic operated safety valves are provided, four per steam generator. The combined capacity of three out of four MSSVs provides a capacity of 120% of the steam flow from each steam generator. The steam relief capacity of 120% has been chosen because the reactor power could, under a slow loss of regulation, go as high as 120% before a reactor is shut down.

5.2.5.3.4 Main Steam Isolation Valves (MSIV)

The MSIVs, installed downstream of the main steam safety valves and upstream of the atmospheric steam discharge valves, are motorized and will be automatic and/or remote, manually operated from the main control room. Appropriate MSIVs will be closed automatically on a high containment pressure signal following a main steam line break inside containment to limit the containment pressure. The isolation valves will also be closed remote manually after reactor shutdown when the long term cooling system is placed in service and the heat transport system is depressurized, following leakage from the primary side of the steam generator to the secondary side.

5.2.5.3.5 Atmospheric Steam Discharge Valves (ASDV)

A total of four globe type control valves are provided. These valves have a total capacity of 10% of the nominal steam flow.

These valves are used as a heat sink when the main condenser is either unavailable or is inadequate. The valves are actuated in response to the steam generator pressure control program demands.

The ASDVs are used during normal plant operation, plant warmup, under loss of Class IV power, loss of condenser, turbine trip, or loss of the line when MSIVs are available and open.

5.2.5.3.6 Condenser Steam Discharge Valves (CSDV)

The main function of these valves is to discharge live steam from the main steam balance header to the condenser. They are used to discharge steam during severe transients, such as turbine trip, to avoid activating the safety valves. Refer to Section 10.4.4.2 for further description.

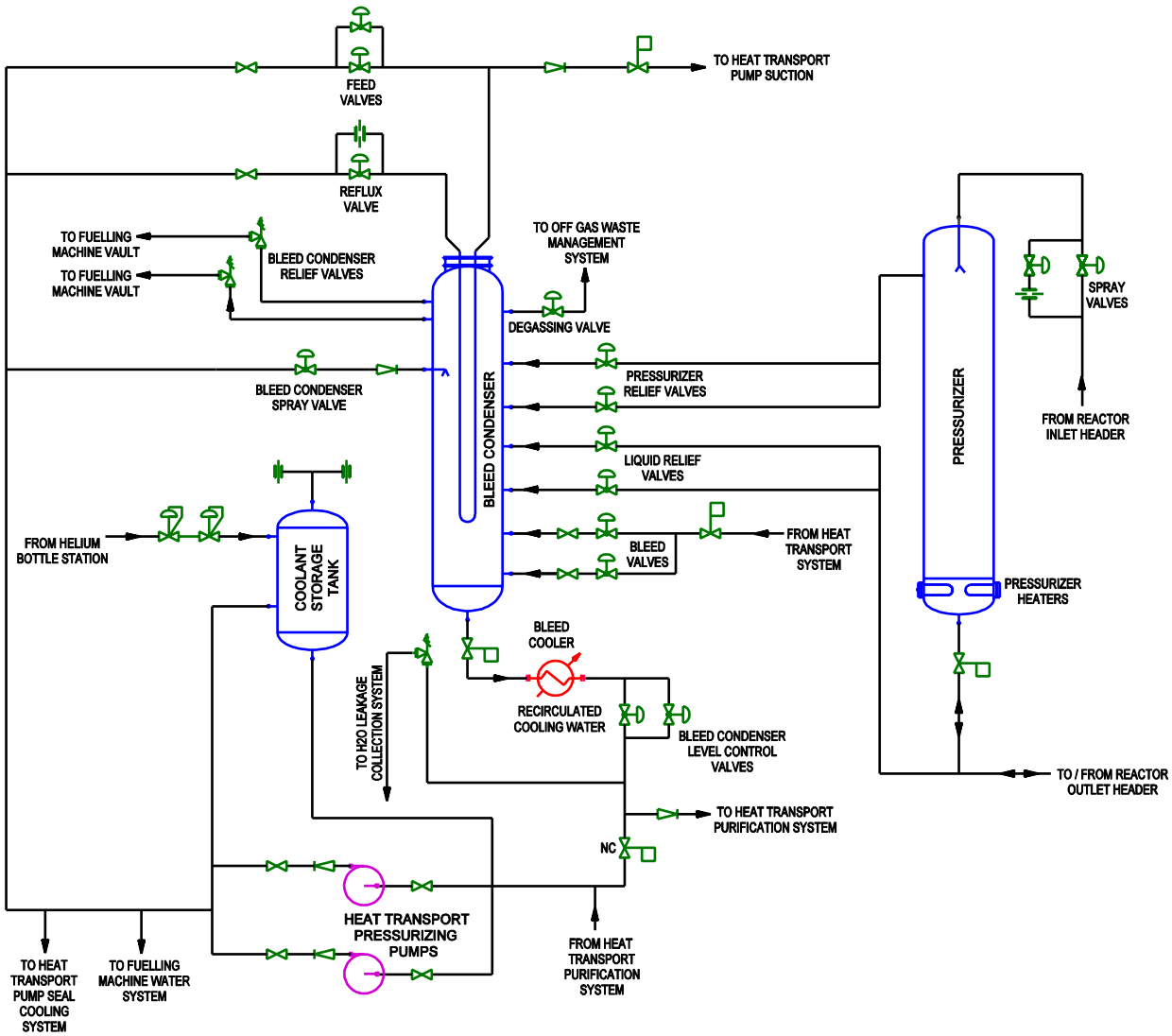

Figure 5.2-1 Pressure and Inventory Control System Flow Diagram

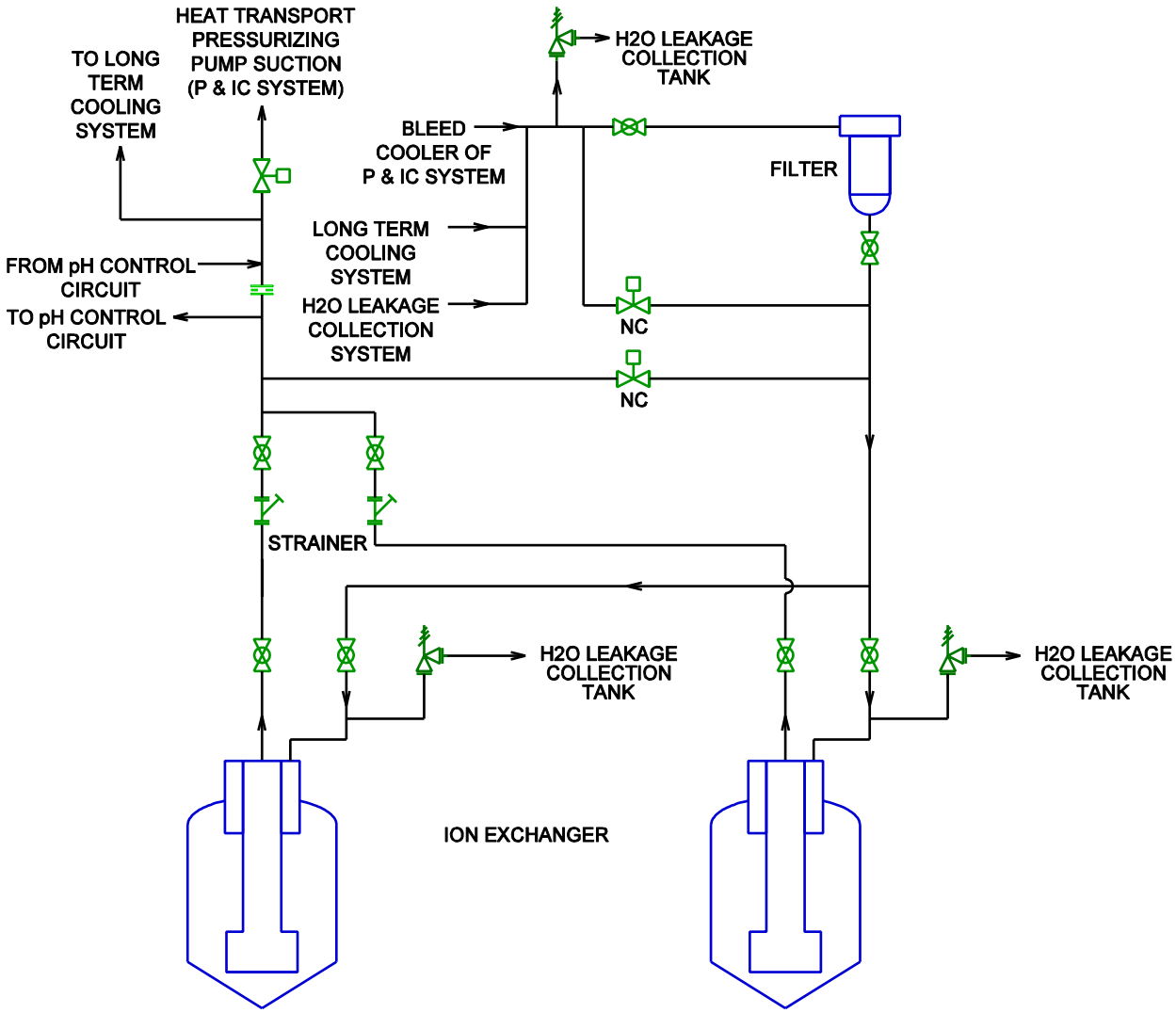

Figure 5.2-2 Heat Transport Purification System Flow Diagram

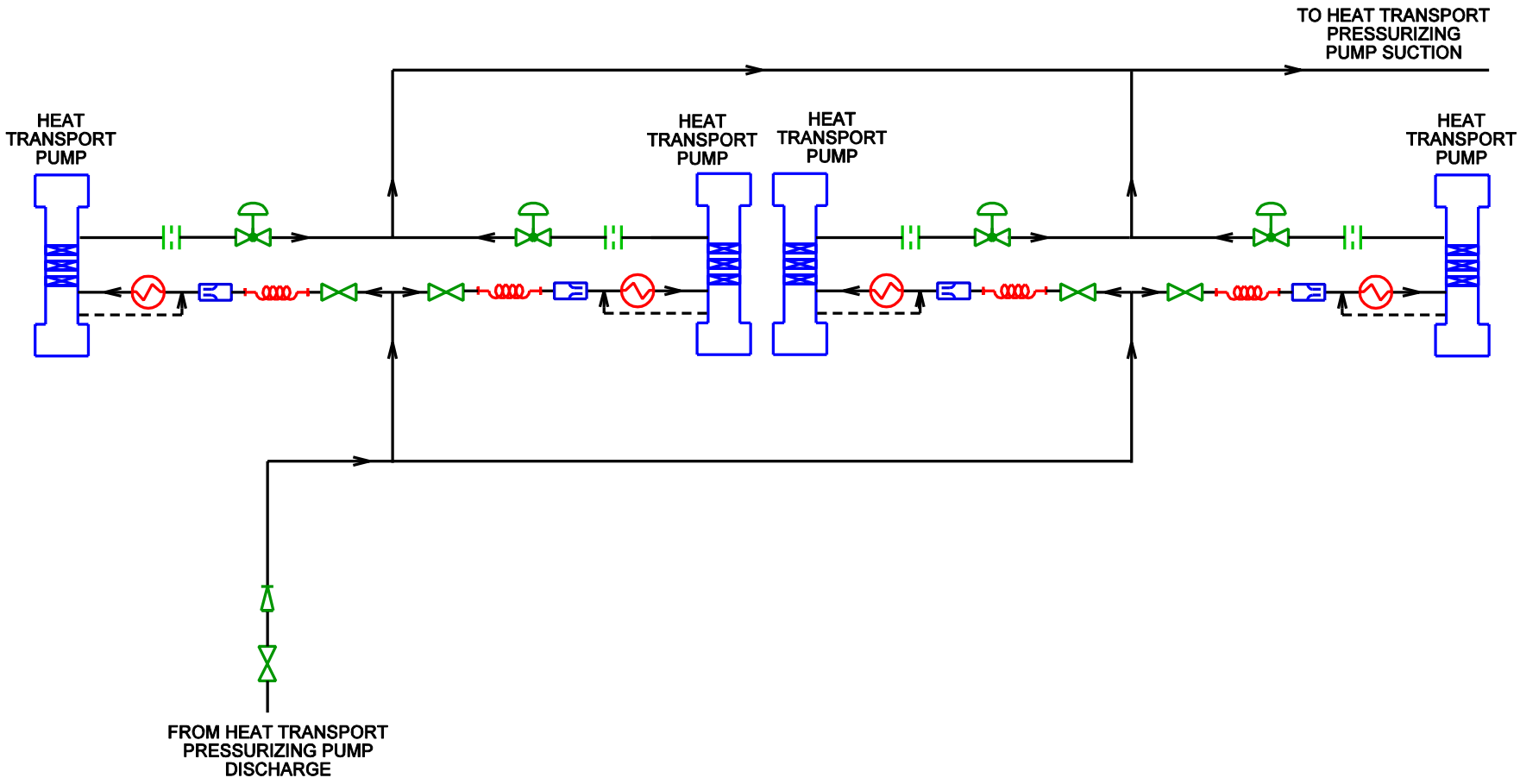

Figure 5.2-3 Heat Transport Gland Seal Cooling System Flow Diagram

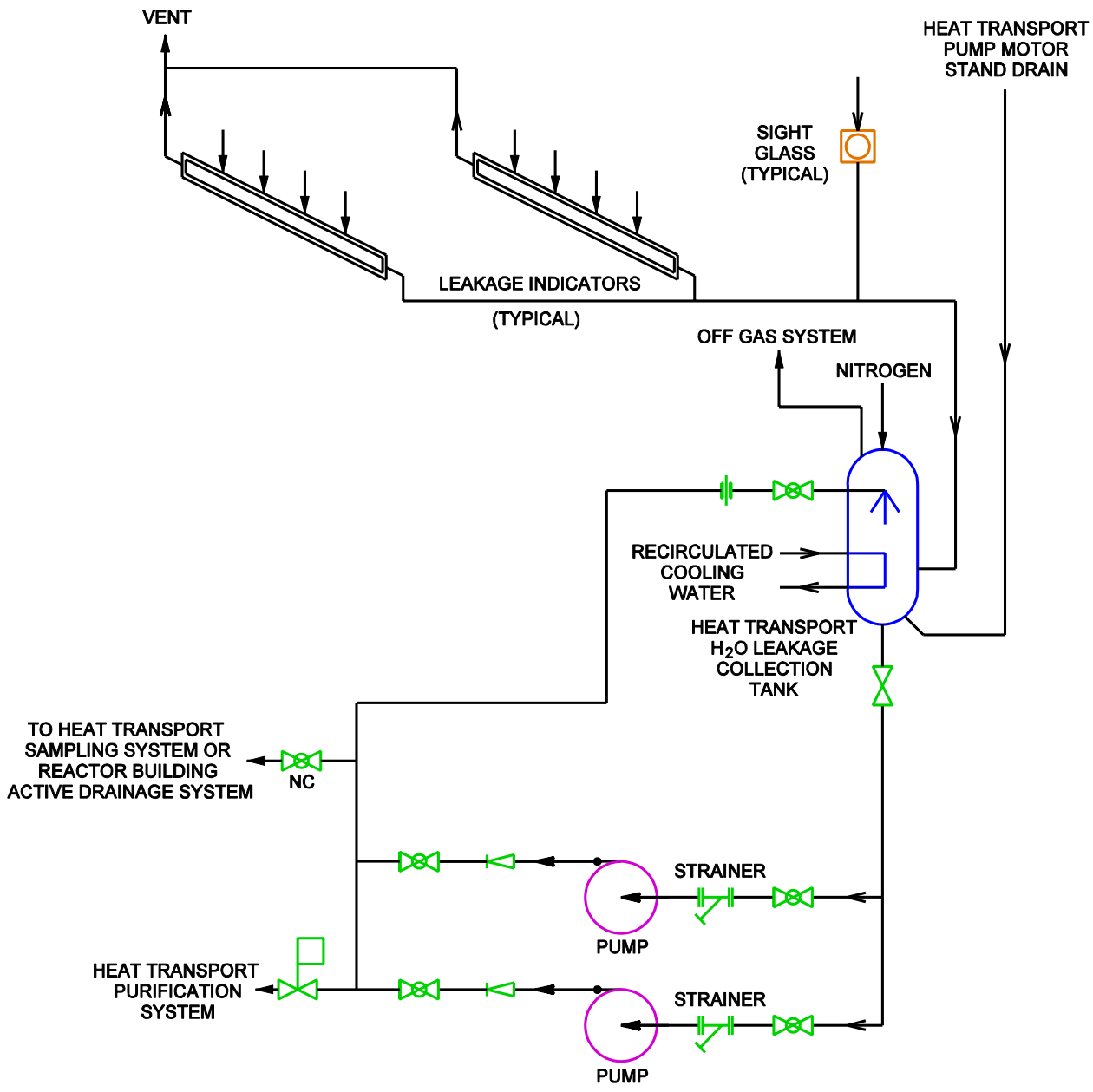

Figure 5.2-4 H_2O Leakage Collection System

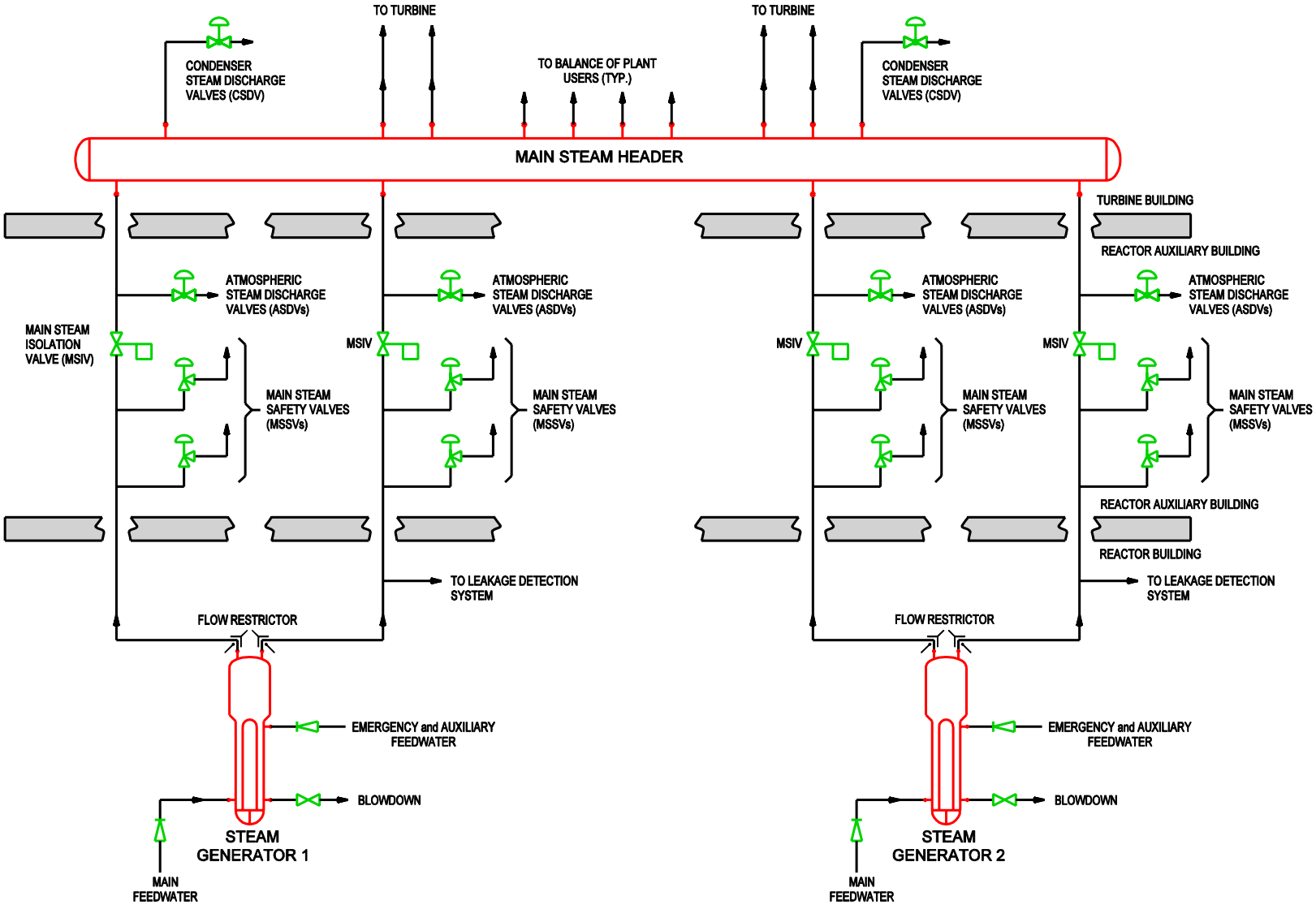

Figure 5.2-5 Main Steam System Flow Diagram

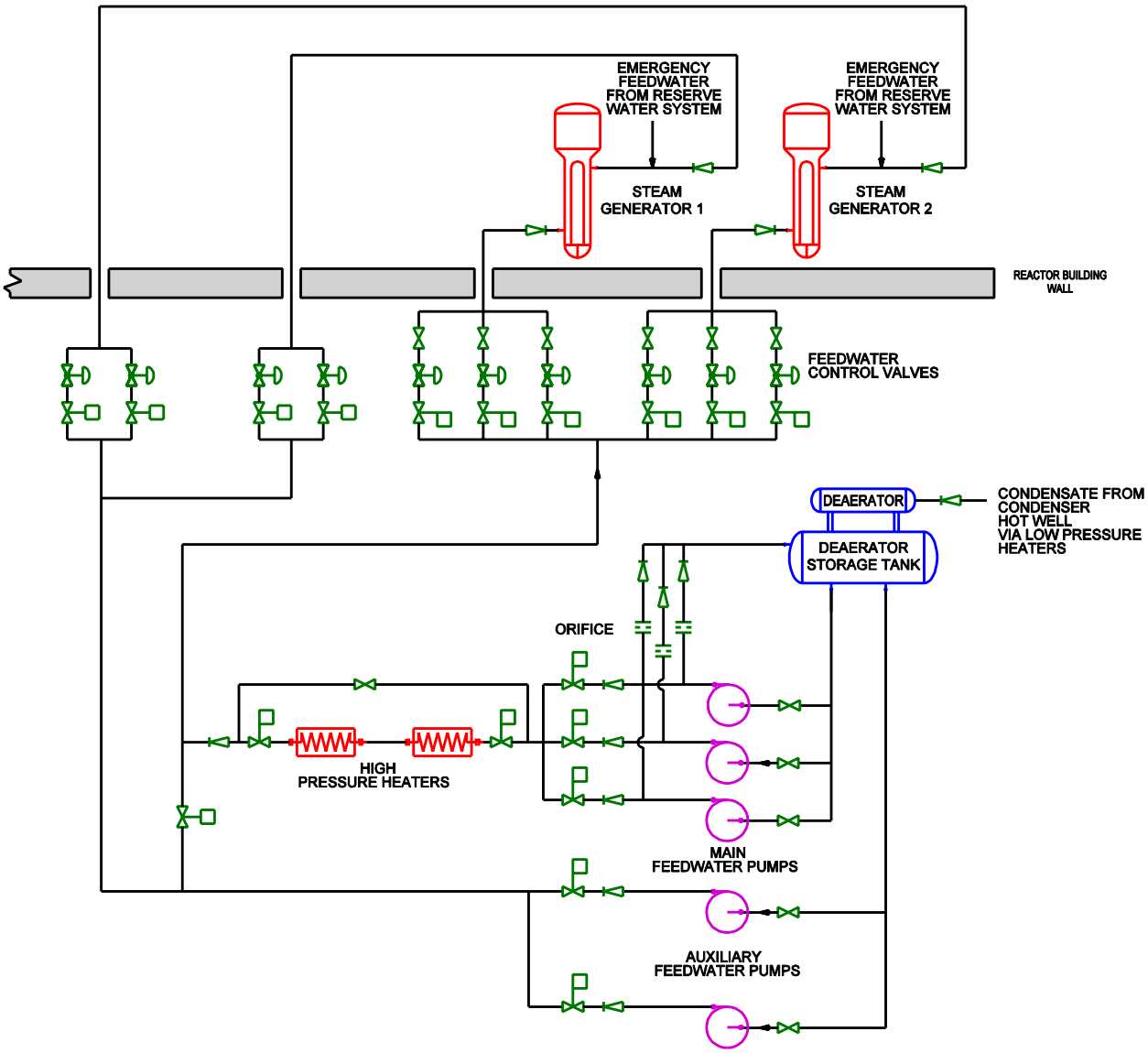

Figure 5.2-6 Feedwater System Flow Diagram

5.3 Moderator Systems

The moderator system consists of a closed heavy water recirculating loop which serves to cool and circulate the heavy water moderator through the calandria. The high purity D_2O moderator, used to slow fission neutrons to sustain criticality, is circulated through the main moderator circuit during normal operation. Heat generated within the moderator is removed in the moderator circuit to maintain a constant moderator temperature at the calandria exits. The moderator circuit also acts as a medium for dispersion of reactivity control agents. During a loss of coolant accident coincident with a loss of the long term cooling system, the moderator system acts as a heat sink, with heat being removed by the moderator heat exchangers.

Integrated moderator auxiliary systems, including moderator purification, inert cover gas pressure control, and D_2O collection and supply, aid in the main system's function.

Neutrons produced by nuclear fission are moderated predominantly by the heavy water in the calandria. The moderator heavy water is circulated through the main moderator system for cooling, and through the moderator purification system for normal clean up and removal of poisons. The system is also connected to the moderator liquid poison system for addition of substances used for reactivity adjustment.

Potential heavy water leak sources are kept to a minimum by using welded construction and bellows seals on valves wherever practical. Where potential leak sources do exist in the moderator system, the leak sources are connected to the heavy water collection system.

The reliability of the moderator system is assured by appropriate component, instrument and power supply redundancies. For economic reasons associated with preservation of heavy water, the moderator system is designed so that the integrity of the pressure boundary is retained during and following a seismic activity with a level equivalent to the design basis earthquake (DBE).

Fission product contamination of the moderator system is prevented by three distinct barriers between the moderator system and the reactor fuel: the fuel sheaths, the pressure tubes, and the calandria tubes.

5.3.1 Design Bases

a) To provide a medium by which to slow down the high energy fission neutrons in the reactor core to the thermal energy level required to promote nuclear fission.

b) To maintain the specified level of heavy water in the calandria in order to:

   1) Avoid power reductions due to inadequate moderator reflector thickness above the calandria tubes;

   2) Limit evolution of D_2 gas by minimizing the free surface area above the moderator; and

   3) Provide adequate cooling to the calandria shell, guide tubes, control elements and calandria tubes.

c) To maintain the calandria outlet temperature constant at the design value by removing the heat transferred to the moderator heavy water in order to:
   1) Prevent dry out of the calandria tubes following certain large LOCA or accidents resulting in pressure tube to calandria tube contact;
   2) Avoid excessive thermal stresses in the calandria shell, internal calandria components, and end shields;
   3) Prevent moderator boiling within the calandria;
   4) Minimize D_2 excursions in the cover gas.
d) To divert a portion of moderator flow through a purification loop in order to maintain the chemical purity of the moderator heavy water within specified limits.
e) To provide for injection and uniform dispersal of neutron absorbing chemicals in the moderator heavy water for short term and long term reactivity control.
f) To accommodate D_2O volume changes in the calandria due to shrinkage and swell.
g) To provide means for D_2O addition, draining, sampling and leakage collection.
h) To ensure leak tightness of the system components in order to avoid the economic penalty of D_2O losses and to minimize hazards associated with release of tritium.
i) To isolate the moderator system from systems providing the functions of sampling, purification and heavy water supply and draining following a LOCA or SDS2 initiation or placement of the reactor in the Guaranteed Shutdown State (GSS).
j) To provide means on the head tank to allow for:
   1) Circulation of cover gas above the free surface in the system;
   2) Overpressure protection;
   3) Makeup water from the reserve water system;
   4) Level measurements.
k) To ensure that the pumps can operate effectively during various service conditions.
l) To be seismically qualified to DBE, Category ‘A’.
m) To provide adequate overpressure protection of the system.

5.3.2 Design Description

The moderator system is a heavy water recirculating system composed of two 100% capacity centrifugal pumps, two 50% capacity heat exchangers, a head tank, valves, piping and associated instrumentation. A schematic diagram of the moderator system is shown in Figure 5.3-1.

The heavy water is drawn from the upper quadrant of the calandria through four pipes (two on each side) into a common suction header. It is pumped by either of the two pumps and discharged into the two heat exchangers. The piping layout and hydraulic design ensures that

flow is evenly distributed into the two heat exchangers. The cooled heavy water from the two heat exchangers is recombined in a common header. It then flows into the calandria via two sets of nozzles located on each side of the upper quadrants of the calandria slightly below the exit nozzles. The head tank located above the calandria maintains the moderator level in the calandria nearly constant by accommodating the moderator swell resulting from temperature fluctuations.

Each pump is designed for 100% design flow capacity and each heat exchanger for 50% design heat removal capacity. Hydraulically, the pumps are connected in parallel and this parallel loop is connected in series with the two heat exchangers. The heat exchangers are configured in a parallel arrangement. The series/parallel arrangement permits the operation of either pump with the two heat exchangers. The moderator system connections are provided for the purification, liquid poison addition, D_2O collection, D_2O supply, D_2O sampling and cover gas systems.

Adequate moderator circulation in the calandria during a failure of Class IV power and subsequent reactor shutdown will be maintained. In addition the main motors are connected to the Class III bus which is normally supplied by Class IV power.

Live-loaded double-packed stem seals are used on large valves in the main moderator system to reduce leakage and maintenance. Bellows stem seals are used on small valves. All of the equipment in the main moderator system is accessible for isolation and maintenance when the reactor is shut down.

Many moderator system components are designed and built to higher standards than required in order to minimize the possibility of heavy water loss and maximize reliability.

The pumps, valves and heat exchangers are located within D_2O vapour barrier enclosures. Temporary strainers are provided in the pump suction lines to protect the moderator pumps from damage due to debris material entering the pump during commissioning.

All piping and components of the moderator system equipment, which are in contact with heavy water, are made from austenitic stainless steel. In addition, the chemistry of the system D_2O must be controlled in order to minimize corrosion, maintain high purity and be compatible with soluble poisons.

Overpressure protection of the main system and calandria is provided by the moderator cover gas system. Two 100%, pneumatically actuated bellow-sealed globe valves are provided in the moderator cover gas system to protect the system from overpressure. These valves relieve helium and heavy water vapour to limit the cover gas pressure.

The ultimate overpressure protection is provided by four relief ducts at the top of the calandria, to limit the magnitude of the peak pressure in the calandria following a (postulated) rupture of one pressure tube/calandria tube combination. Each duct is equipped with a 100% capacity rupture disc.

5.3.3 Component Description

5.3.3.1 Pumps

The two 100% capacity moderator pumps are duplicated for reliability purposes such that, during normal reactor operation, one pump is operated while the other is on standby. Failure of the running pump motor automatically starts the standby.

Double mechanical seals operating in series are provided on each of the pump shafts. Each of the mechanical seals is capable of sealing the pump shaft in the event of failure of one of the seals. The mechanical seals are cooled by a heavy water flow from the pump discharge. An atmospheric seal is also provided on each of the pump shafts. The atmospheric seal is designed to function as a backup shaft seal in the event of a failure of both the mechanical seals.

Each pump main motor is directly coupled to the pump shaft so that the pump and the motor operate at the same speed. The main motors are three phase induction motors, totally enclosed and cooled by a water cooled heat exchanger. Heaters are provided to prevent condensation of moisture inside the enclosure when a main motor is not operating.

Instrumentation is provided to monitor the motor winding temperature, the motor bearing temperature, the pump inner and outer seal pressure, the pump/motor bearing and shaft vibrations. Pump suction and discharge pressures are measured by pressure gauges mounted locally in an accessible area. Pump head is measured by differential pressure transmitters. Annunciation of high and low pressure is made in the control room.

5.3.3.2 Heat Exchangers

The moderator heat exchangers are stainless steel, plate-type heat exchangers. Each heat exchanger is designed to remove 50% of the moderator system heat load.

During reactor normal operation, the heat exchangers cool the heavy water from 80°C to 57°C. By controlling the recirculated cooling water flow rate to the secondary side of the heat exchangers, the calandria outlet D_2O temperature is controlled at 80°C. The signal to the temperature control valves is provided from the calandria outlet D_2O temperature monitors through the station control computers.

To minimize the possibility of downgrading the moderator heavy water or tritium release into the cooling water, the recirculated cooling water on the secondary side is supplied at an almost equal pressure to that of the D_2O side. In addition, the possibility of heat exchanger D_2O leaks is reduced to a minimum by welding the primary side plates.

A duplicated control program in the standby computer takes over control in the event of failure of the operating computer. On failure of instrument air or control power, the recirculated cooling water valves will go to their fail-safe positions.

5.3.3.3 Head Tank

The moderator head tank, in conjunction with the calandria relief ducts, accommodates the fluctuations in D_2O volume due to bulk temperature changes. The cover gas in the head tank is helium.

Calandria levels are measured by a single wide range transmitter (to measure the full range of calandria levels) and three narrow range transmitters (to measure level from the top of the head tank to the centreline of the top row of calandria tubes). From the narrow range measurement, high and low levels are annunciated in the control room.

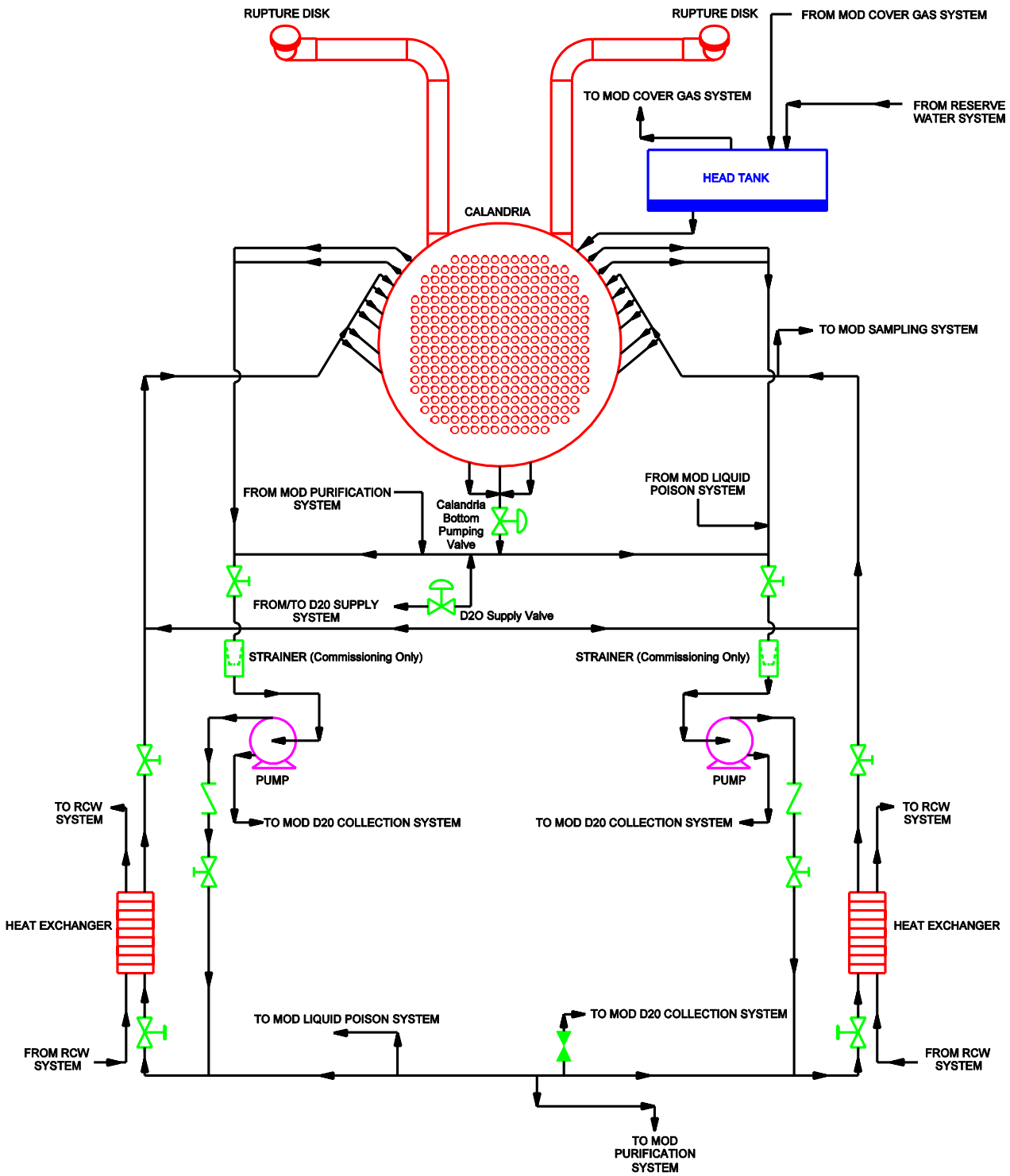

Figure 5.3-1 ACR-700 Main Moderator System

5.4 Moderator Auxiliary Systems

5.4.1 Moderator Purification System

The moderator purification system serves to maintain the purity of the heavy water moderator within specified limits by removing dissolved corrosion products, suspended solids, neutron absorbing soluble poisons which are periodically added to the moderator for reactor reactivity control, and maintaining the pD of D_2O within a specified range.

It also removes soluble poison content within the moderator in response to reactivity demand after a poison injection shutdown.

The purification system forms a closed recirculating circuit, taking flow from the moderator pump discharge line and returning it to the suction line. It comprises a heat exchanger, four ion exchange columns, two filters, and a strainer, appropriately shielded.

The purification system can be isolated from the main moderator circuits in order to prevent inadvertent removal of soluble poisons when reactor is shutdown.

The moderator purification system is provided to keep the main moderator system clean and to control the soluble poison in response to reactivity demand. The moderator purification system has been designed with the necessary equipment to allow maintenance of the chemistry of the moderator system within specification.

5.4.1.1 Design Bases

a) Maintain the purity of the moderator heavy water to minimize radiolysis, thus preventing excessive production of D_2 in the cover gas and to minimize corrosion of components.

b) Remove the soluble poisons, boron and gadolinium, used for reactivity control in response to reactivity demands. Boron is used to compensate for excess reactivity in the initial core. Gadolinium is used for short-term purposes such as Xenon transients during start-up.

c) Following reactor shutdown, remove the soluble poison, gadolinium, injected by the liquid injection shutdown system (LISS).

d) The moderator purification system shall be isolated from the main moderator system following shutdown by SDS2 to prevent poison removal from the moderator D_2O.

e) The main moderator system is seismically qualified to DBE Category ‘A’ except the inlet pneumatic valves to the ion exchange columns and isolation valves to the moderator system are seismically qualified to DBE Category ‘B’.

f) The system is not required to function under harsh environment conditions inside reactor building during accident. However, the inlet pneumatic valves to the ion exchange columns and isolation valves to the moderator system shall be environmentally qualified to prevent poison removal from the moderator D_2O.

5.4.1.2 Design Description

The system forms a closed circuit and recirculates a portion of the moderator heavy water. The supply comes from the common discharge header of the main moderator pumps, and the return connects back to the common suction header of the two main moderator pumps. The purification flow is taken from the pump outlet rather than from the main moderator heat exchanger outlet to maximize available pressure drop.

The system consists of the following major components (see Figure 5.4-1):

- Four ion exchange columns.
- Two filters downstream of the ion exchange columns for removal of insoluble debris.
- One purification heat exchanger for cooling the flow of moderator heavy water leaving the main moderator circuit before entering the valved in filter and ion exchange columns.
- One strainer downstream of the ion exchange columns for removal of resin beads which may escape due to failure of the resin retaining elements.
- All associated piping, valves in the ion exchanger columns, and sampling connections.

The purification heat exchanger cools the purification flow before the heavy water enters the ion exchange columns. The purification flow then passes through the ion exchange column(s). Two ion exchange columns are utilized for normal purification with one column used at a time. If boron removal is needed one of the column can be recharged for this purpose.

Overpressure protection is provided for the isolable pressure vessels of this system. Thus, each of the ion exchange columns, the filters, and the heat exchanger hot (D_2O) side are provided with a relief valve and sight glass.

The construction material for both the ion exchange columns and the filters, as well as all the valves, strainers, and piping, is stainless steel.

In order to safeguard against inadvertent criticality while the reactor is shut down over a long term, the moderator purification system is automatically isolated from the main moderator system by the closure of ion exchange column inlet valves and two additional power actuated isolation valves in series. These valves will remain closed until shutdown systems SDS1 and SDS2 have been repoised. The isolation of the moderator purification system will also occur in the event of unavailability of either SDS1 or SDS2. The pneumatic valves are designed to fail closed on loss of instrument air or control signal.

Other instruments are for indicating pressure drop across the ion exchange columns, filters and strainer, and total purification flow through the system.

Alarms are provided for high purification temperature, high pressure drop across ion exchange columns, filters and strainer, and low purification flow.

5.4.1.3 Component Description

5.4.1.3.1 Ion Exchange Columns

The four ion exchange columns are designed to prevent the resin from entering the main moderator system by use of inlet and outlet resin retention screens, and to be loaded and unloaded with resin using slurry techniques. For this purpose, the column incorporates a conical bottom to facilitate resin removal by resin slurry. Resin addition is via a penetration at the top of the column. The construction material is stainless steel wherever there is contact with D_2O.

5.4.1.3.2 Purification Cooler

This heat exchanger is sized to maintain a constant outlet temperature. The cooling water comes from the recirculated cooling water system.

5.4.1.3.3 Filters

The filter removes any insoluble debris from the flow from the ion exchangers.

5.4.2 Moderator Cover Gas System

The moderator cover gas system provides a controlled atmosphere for the moderator, prevents corrosion, and provides a means of pressure control in the calandria under various operating conditions.

The moderator cover gas system is a closed recirculating circuit, which controls the concentration of deuterium gas by catalytically recombining deuterium and oxygen gases to re-form heavy water. The deuterium gas diffuses into the cover gas after its formation by the radiolysis of heavy water. Reduction of the deuterium concentration in the cover gas controls a potential deflagration hazard. Helium is chosen as the cover gas for the moderator system because it is chemically inert and is not affected by neutron irradiation.

The moderator cover gas system comprises two compressors, two recombination units each equipped with heaters and flame arrestors, a delay tank and a cooler, as well as associated instrumentation and appropriate shielding.

5.4.2.1 Design Bases

a) To provide an inert gas cover for the moderator to prevent corrosion and reduce radioactivity.
b) To circulate the gas to control and prevent significant local concentrations of D_2 in the cover gas.
c) To maintain a nominal cover gas pressure.

5.4.2.2 Design Description

Figure 5.4-2 shows the flow diagram of the moderator cover gas system. The system forms a closed circuit for the circulation of cover gas through the calandria relief ducts. The system contains two compressors and two recombination units. During normal operation, one compressor and both recombination units are running, with the other compressor on standby. The redundancy permits continuous operation of the system in the event of failure of a compressor and/or a recombiner.

Helium is used as the cover gas because it is inert, it reduces corrosion in the system as compared to air, and because it contains less argon than air, resulting in lower radiation fields due to the activation product, Argon 41. The cover gas receives D_2 and O_2 by diffusion through the moderator cover gas interface. The D_2 and O_2 are produced by radiolysis of the moderator heavy water. The moderator cover gas system prevents accumulation of these gases by catalytically recombining them to form heavy water.

All of the equipment in the moderator cover gas system, except for the helium and oxygen bottle stations, are located in an accessible area inside the reactor building. The bottle stations are located in the reactor auxiliary building (RAB).

The recombination units recombine deuterium with oxygen, and are designed to operate at very high temperatures without damage. Heaters are provided on the inlet line to the recombiners so that the catalyst remains dry. Flame arresters are installed upstream and downstream of the recombination units.

Two control bleed valves are provided in the cover gas system.

Overpressure protection of the system is provided by the bleed valves and use of rupture discs, one for each of the four relief ducts. The bleed valves limit the pressure during “normal” and “upset” conditions to limit the magnitude of the peak pressure in the calandria for “emergency” conditions.

5.4.2.3 Component Description

5.4.2.3.1 Compressors

The two 100% capacity cover gas compressors are of the liquid ring type operating with a low differential pressure. The operation of the compressor is dependent upon a continuous supply of cool, clean service liquid (heavy water), which enters the compressor at the initial stage and is discharged from the final stage together with the compressed gas. Heavy water is supplied from the moderator system.

During normal operation, one compressor is running and the second is on standby.

5.4.2.3.2 Preheaters

The preheaters warm the gas entering the recombination unit so that no liquid water is present.

5.4.2.3.3 Recombination Units

The two recombination units provide catalytic recombination of D_2 and O_2 to reform D_2O. Both units are running during normal operation.

5.4.2.3.4 Helium Gas Cooler

The helium gas cooler cools the hot helium gas from the recombiners.

5.4.2.3.5 Booster Pumps

On loss of Class IV power, the moderator pumps generate an insufficient pressure head for the D_2O to reach the liquid ring compressor.

Two pumps boost the D_2O pressure in the supply line to the liquid-ring-seal type compressors during Class IV power failure. They are supplied with Class III power.

5.4.2.3.6 Flame Arresters

Four flame arresters are provided, one upstream and one downstream of each of the two recombiners. These prevent flame propagation in the circuit should explosive recombination of D_2 and O_2 occur.

5.4.2.3.7 Calandria Rupture Disc Assemblies

The calandria rupture disc assemblies are not the principal pressure relief devices required by the ASME Code for the calandria vessel, the moderator system, or the moderator cover gas system. They are backup devices to the normal means of pressure relief, which limit the magnitude of the peak pressure in the calandria for “emergency” conditions.

5.4.2.3.8 Delay Tank

The delay tank, located in an inaccessible area, holds up the D_2O supply flow from the moderator system, permitting O-19, F-17 and N-16 activity to decay to levels such that excessive radiation fields are not produced in the vicinity of the poison storage tanks in the accessible area.

5.4.3 Moderator Liquid Poison System

The purpose of the moderator liquid poison system is to supply neutron absorbing poisons in solution in the moderator for reactivity control and to adjust for excess reactivity, as well as to maintain the reactor in a safe shutdown condition. Soluble neutron absorbing poisons, such as

boron for long-term reactivity control, and gadolinium for short-term reactivity requirements, both with large neutron capture cross-sections, are added to the moderator in a controlled manner.

The liquid poison system comprises of poison mixing tanks and associated instrumentation. A heavy water stream is taken from the moderator cover gas system at a point downstream of the delay tank, where radioactive nitrogen-16, O-17 and F-17 decay before entering the poison mixing tank. Poison is added and mixed with the heavy water. The poison solution is conveyed, by gravity, to the moderator circuit at the moderator pump suction. Each return line is provided with a means to adjust the poison addition rate. In addition, an isolation valve is provided on the return line to the moderator system, which isolates the liquid poison system from the moderator system.

5.4.3.1 Design Bases

a) To add negative reactivity to the moderator D_2O to compensate for excess reactivity.

b) To provide a means of decreasing reactivity in conjunction with other reactivity control devices.

c) To provide a means to guarantee enough poison in the moderator to prevent criticality during shutdown.

5.4.3.2 Design Description

Figure 5.4-3 shows the flow diagram of the moderator liquid poison system.

The moderator liquid poison system is used to control the core reactivity. Soluble chemicals (neutron poisons) with large neutron capture cross-sections are added to the moderator in a controlled manner by this system. Boron and gadolinium are the poisons used.

Boron is used to compensate for the lack of neutron absorbing fission products in the new fuel at initial plant start-up.

Gadolinium is used on reactor start-up following a long shutdown since it is burned to a lower neutron capture cross section at approximately the same rate as the fission product xenon is produced.

Two poison storage tanks are provided, one for automatic poison addition and one for manual addition. Both poison storage tanks have agitators to aid in the preparation of the poison solution. The solution is prepared by mixing the poison with heavy water supplied to the poison storage tanks from the delay tank, which allows nitrogen-16, oxygen-19 and fluorine-17 to decay. The moderator liquid poison system is located inside the reactor building at an elevation that permits the addition of poison solutions to the moderator pump suction by gravity. This eliminates the need for injection pumps, and thus improves the reliability of the system. Separate lines from the mixing tanks carry the poison to the suction of the moderator pumps. Valves are manually adjusted to obtain the required rate of poison flow from the tanks, and operation of control valves starts or stops the poison flows as required.

The system provides a facility permitting manual addition in a controlled amount of poison to the moderator system, and addition of gadolinium poison automatically under abnormal operating conditions.

Ventilation is provided for the room to minimize tritium doses to the operators in the area.

5.4.3.3 Component Description

5.4.3.3.1 Liquid Poison Storage Tanks

The poison storage tanks are vertical cylindrical tanks with dished heads. The tanks are used for mixing and storing poison solutions, ready for addition to the moderator system. The charging hopper for each tank consists of a flanged connection to the tank with rubber diaphragms and a valve. The diaphragms minimize tritium release and the long funnel prevents sludge accumulation in the small diameter pipe and valve.

5.4.3.3.2 Agitators

The agitator is used during addition of the poison concentrate to the tank to ensure proper mixing and dissolution of the poison.

5.4.3.3.3 Traps

A float trap is installed in the vent line from each poison storage tank. The trap closes the vent line should the tank be accidentally overfilled, preventing flooding of the heavy water vapour recovery system and intermixing of the poison solutions.

5.4.4 Moderator D_2O Collection

The D_2O collection system is provided to collect leakage from mechanical seals, the moderator liquid poison system, the moderator purification system, and to receive drains from the moderator sample station and isolatable moderator system components. The collected leakage is sampled and transferred to the main moderator system or to the heavy water clean-up system. If sampling indicates a deterioration in isotopic content, it is cleaned up and drummed for shipment to an externally located D_2O upgrader.

The moderator D_2O collection system comprises a collection tank, leakage flow indicators, transfer pump, and associated piping.

5.4.4.1 Design Bases

a) To collect any D_2O leakage from the moderator main pump seals and other sources and to indicate the approximate flow rate.

b) To provide recirculation and sampling facilities for the contents of the moderator collection tank.

c) To transfer the contents of the moderator collection tank to the moderator system.

d) To transfer the contents of the moderator collection tank to the D_2O cleanup system.

e) To measure tank level and to automatically operate the pump to control high and low level in the collection tank.

f) To provide overpressure protection to the main moderator system. The drain valves located on the main moderator pumps and heat exchangers are connected to the moderator D_2O collection. These drain valves are interlocked with the pumps and heat exchangers isolation valves in such a way that the isolation valves cannot be closed without opening the drain valves.

5.4.4.2 Design Description

Figure 5.4-4 shows the flow diagram of the moderator D_2O collection system.

The moderator D_2O collection system consists of a collection tank, leakage flow indicators, transfer pump, and associated piping. The system is provided to reduce the need for drum handling of tritiated D_2O in the reactor building.

D_2O leakage from the moderator pump mechanical seals, heat exchanger drains, and other services flows by gravity to the collection tank. Local visual indication of the source and flowrate is provided.

Connections to and from the D_2O sampling system are provided. The transfer pump may be used to pump the contents of the collection tank to the main moderator system if the sample shows the water to be of reactor grade, or to the D_2O cleanup system when the water needs to be cleaned and upgraded.

The D_2O collection tank is vented to the D_2O vapour recovery system, thereby providing overpressure protection. This line connects into the dryer suction at an elevation greater than the level corresponding to the moderator level in the calandria plus cover gas pressure, preventing D_2O from entering the dryer in case of overfilling of the collection tank.

A recirculation line from the pump discharge to the tank ensures an adequate flow through the pump to prevent overheating during sampling. This is required because the resistance in the sampling system tubing is high. The recirculation also mixes the contents of the collection tank so that representative samples can be taken.

The wetted parts in the system are austenitic stainless steel except for glass in the sight glasses and carbon bearings in the pump. All system equipment and valves are located in the reactor building.

Local and control room indication of the collection tank level is provided. High tank level alarm is annunciated. Automatic and manual controls for the pump and pneumatic discharge valve are provided.

5.4.4.3 Component Description

5.4.4.3.1 D_2O Collection Tank

A cylindrical tank is provided to collect the leakages.

5.4.4.3.2 D_2O Collection Pump

The D_2O collection pump transfers the contents of the collection tank to the main moderator system via a control valve and a check valve. The check valve prevents back flow from the moderator main circuit if the control valve is opened and the pump is not operated.

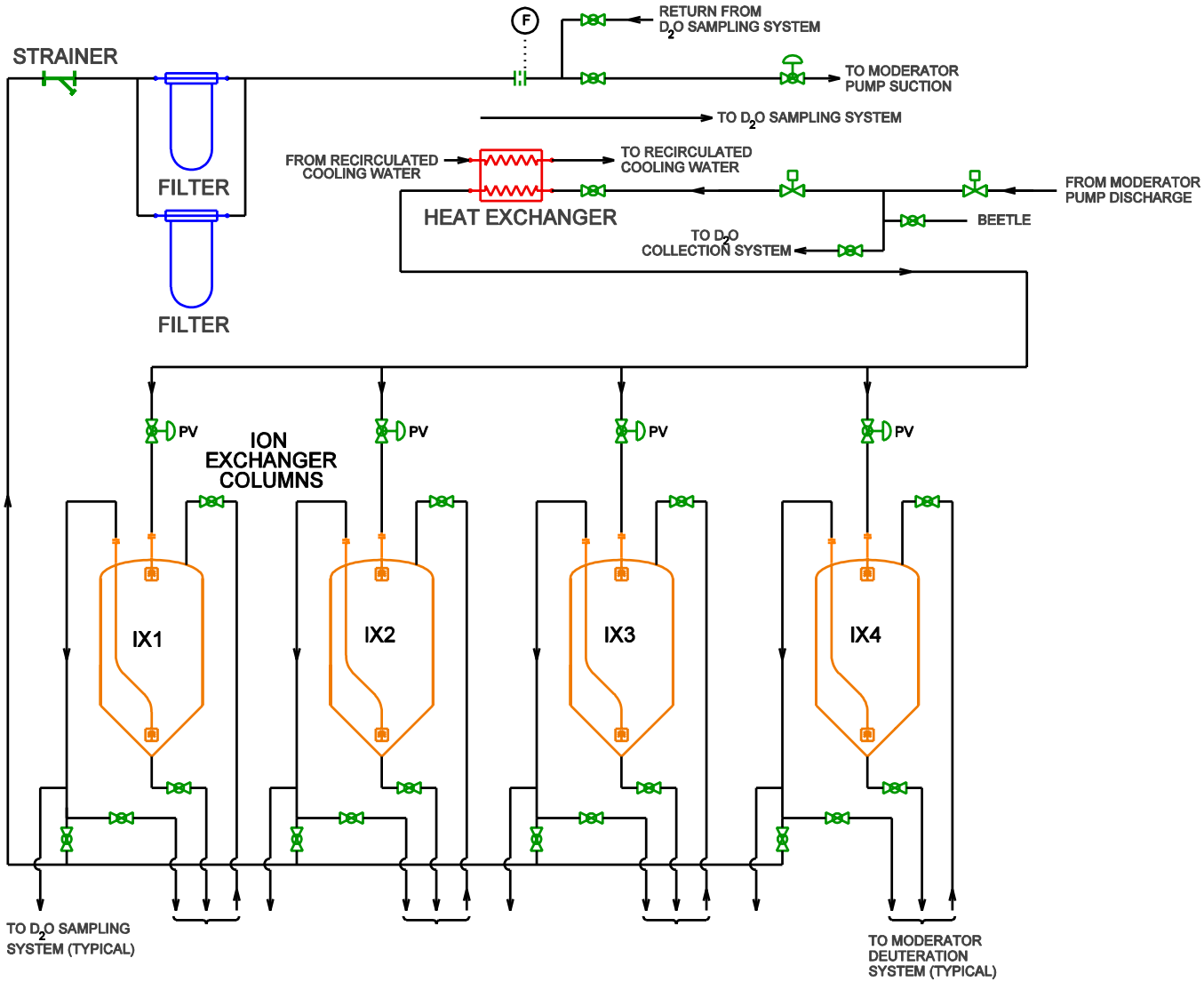

Figure 5.4-1 ACR-700 Moderator Purification System

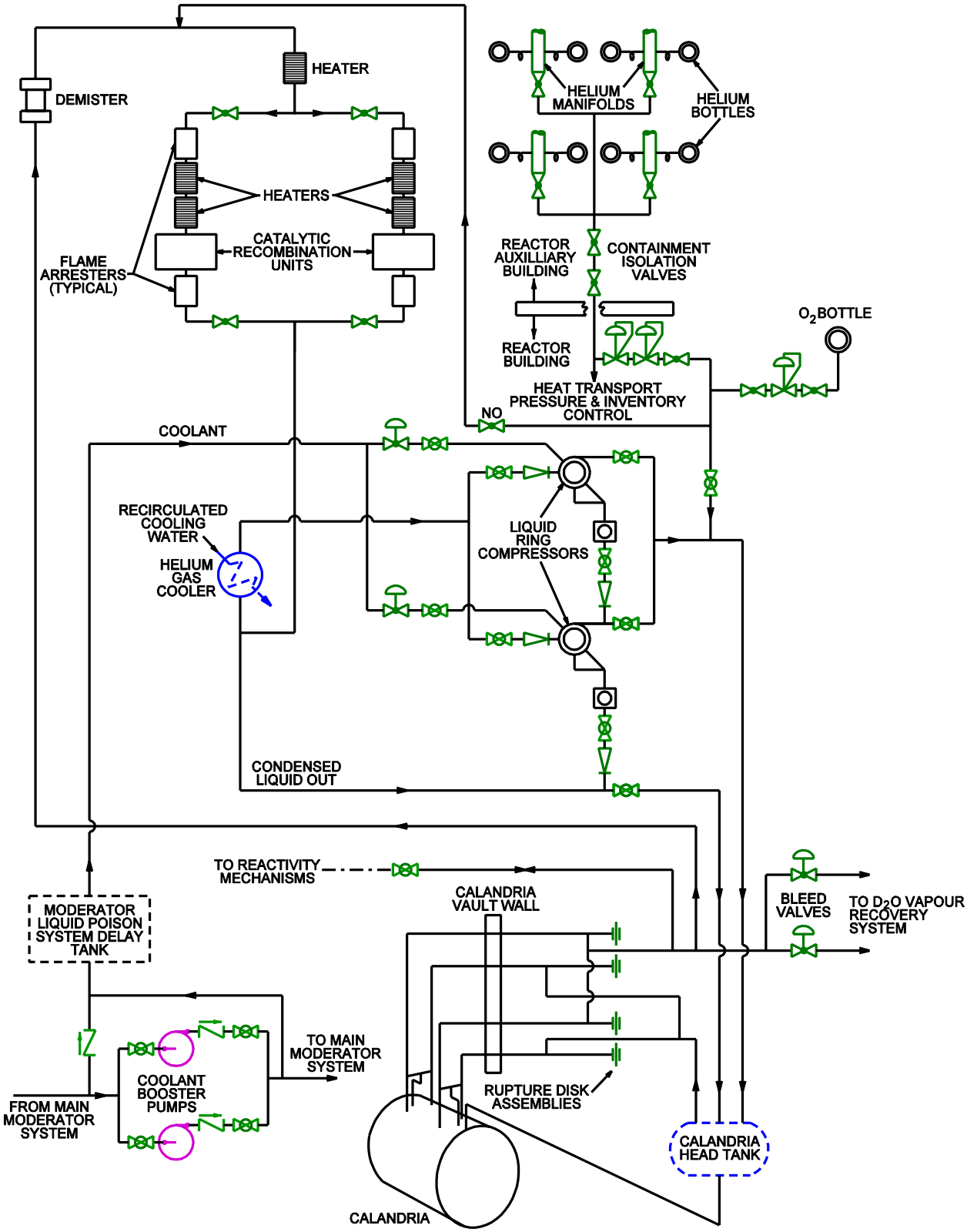

Figure 5.4-2 Moderator Cover Gas System

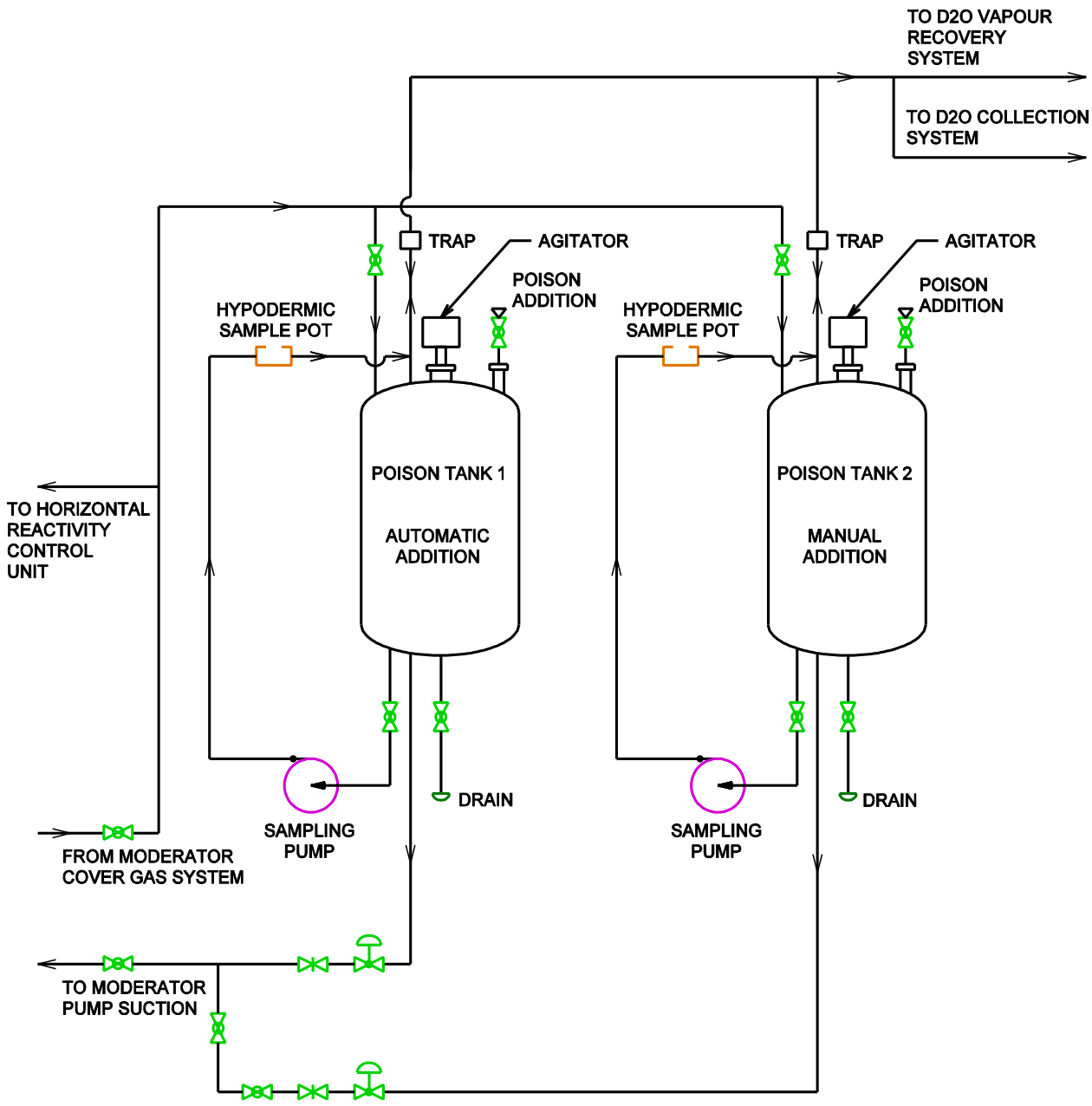

Figure 5.4-3 Moderator Liquid Poison System

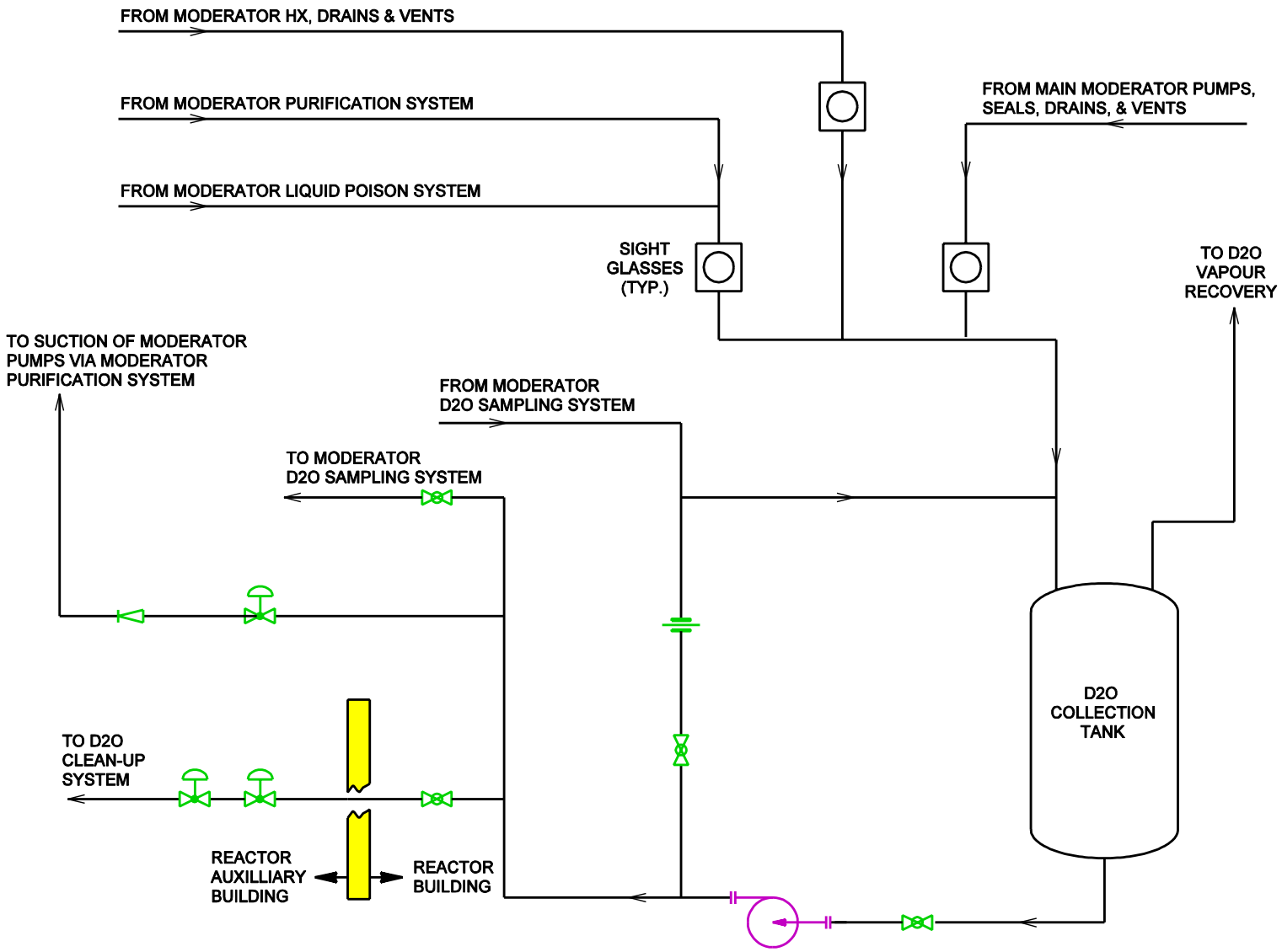

Figure 5.4-4 Moderator D_2O Collection System

TABLE OF CONTENTS

SECTION **PAGE**

6. SAFETY SYSTEMS 6-1

6.1 General 6-1
6.1.1 Design Bases 6-2
6.1.1.1 General 6-2
6.1.1.2 Separation of Systems and Components 6-2
6.1.1.3 Design Philosophy Related to Achieving Full Independence between the Two Shutdown Systems 6-3
6.1.1.4 Seismic Requirements 6-3
6.1.1.5 Tornado Protection 6-3
6.1.1.6 Reliability 6-4
6.1.2 Summary Descriptions 6-4
6.1.2.1 Reactor Containment System 6-4
6.1.2.2 Emergency Core Cooling System 6-4
6.1.2.3 Shutdown System No. 1 (Shutoff Units) 6-5
6.1.2.4 SDS2 (Liquid Injection Shutdown System) 6-6
6.1.2.5 Safety Support Systems 6-6
6.2 Shutdown System No. 1 (SDS1) 6-7
6.2.1 Design Bases 6-7
6.2.1.1 Design Basis Events 6-7
6.2.1.2 Functional Requirements 6-8
6.2.1.3 SDS1 Performance Requirements 6-8
6.2.1.4 Safety Requirements 6-9
6.2.2 System Description 6-9
6.2.3 Component Description 6-10
6.2.3.1 Shutoff Units 6-10
6.3 Shutdown System No. 2 (SDS2) 6-11
6.3.1 Design Bases 6-11
6.3.2 System Description 6-12
6.3.3 Component Description 6-13
6.3.3.1 Helium Supply Tank 6-13
6.3.3.2 Quick-Opening Valves 6-13
6.3.3.3 Gadolinium Poison Tanks 6-13
6.4 Emergency Core Cooling System 6-15
6.4.1 Emergency Coolant Injection System 6-15
6.4.1.1 Design Bases 6-15
6.4.1.2 System Description 6-17
6.4.1.3 Component Description 6-17
6.4.1.4 Support Systems 6-18
6.4.2 Long Term Cooling System 6-21
6.4.2.1 Design Bases 6-21
6.4.2.2 System Description 6-22

TABLE OF CONTENTS

SECTION **PAGE**

6.4.2.3 Component Description....6-23
6.4.2.4 Support Systems....6-25
6.5 Containment....6-27
6.5.1 Containment Envelope....6-27
6.5.1.1 Energy Suppression Systems....6-27
6.5.1.2 Atmospheric Control Systems....6-27
6.5.2 Design Bases....6-27
6.5.2.1 Containment Envelope....6-28
6.5.2.2 Reactor Building Air Coolers....6-30
6.5.2.3 Atmospheric Control Systems....6-30
6.5.2.4 Instrumentation and Logic....6-30
6.5.3 System Description....6-31
6.5.3.1 Containment Envelope....6-31
6.5.3.2 Reactor Building Air Coolers....6-39
6.5.4 Safety Aspects....6-39
6.5.4.1 Reliability....6-39
6.5.4.2 Independence....6-40
6.5.4.3 Seismic Qualification....6-40
6.6 Fission Product Removal and Control....6-48
6.7 In-service Inspection and Testing....6-50
6.7.1 In-Service Inspection....6-50
6.7.1.1 Systems Subject to Inspection....6-50
6.7.1.2 Heat Transport System....6-51
6.7.1.3 Emergency Core Cooling System....6-51
6.7.1.4 Containment Components....6-51
6.7.2 In-Service Testing....6-52
6.7.2.1 Pre-Service and In-Service Testing Requirements....6-52
6.7.2.2 In-Service Test Program....6-53
6.7.2.3 Systems Subject to Testing....6-54

6. SAFETY SYSTEMS

6.1 General

The plant must carry out the following safety functions:

- Shutdown the reactor and maintain it in a safe shutdown condition.
- Remove the decay heat from the fuel.
- Limit the release of radioactivity by maintaining multiple barriers.
- Supply the necessary information for post-accident monitoring to permit the operator to assess the state of the nuclear steam supply system.

Each of the above safety functions may be performed by several different safety related systems. Safety related systems are defined as those which, by virtue of failure to perform the safety functions above in accordance with the design intent, could cause the regulatory dose limits for the plant to be exceeded in the absence of mitigating system action. Two categories of safety related systems exist in a nuclear plant. Preventative systems perform safety functions during the normal operation of the plant, to ensure that radioactive materials remain within their normal boundaries. Examples of such systems are the reactor building cooling and heating system, HT feed and bleed system, and annulus gas system. Protective systems are systems which perform safety functions to mitigate events caused by failure of the normally operating systems or by naturally occurring phenomena. Protective systems only are discussed in this section.

The systems included under protective safety related systems are further classified as:

1. Safety Systems

   Safety systems are those systems designed to quickly shutdown the reactor, remove decay heat, and limit radioactive release subsequent to the failure of a normally operating safety related system.

   The plant contains the following safety systems:

   - Shutdown System No. 1 (SDS1)
   - Shutdown System No. 2 (SDS2)
   - Emergency Core Cooling System
   - Containment System

2. Safety Support Systems

   Safety support systems are so named because they provide services needed for proper operation of one of the safety systems. These systems include electrical power, instrument air, and cooling water. Some of the safety support systems are relied upon for normal plant operation as well.

6.1.1 Design Bases

6.1.1.1 General

The safety systems are incorporated into the plant design to limit radioactive releases to the public in the event of an accident.

The basic design principles are as follows:

a) The safety systems are independent from the process systems, including the reactor regulating system, to the extent practical.

b) Two independent reactor shutdown systems.

c) Each of the two shutdown systems, acting alone to shutdown the reactor, is capable of preventing failure of the heat transport system due to overpressure, excessive fuel temperatures or channel failure.

d) Following an initiating failure, each of the two shutdown systems, acting alone to shutdown the reactor, is capable of limiting both the rate of energy production and the total energy production to the extent that the integrity of the containment system is not jeopardized.

e) Safety systems are designed to have high reliability.

f) The appropriate codes, standards, or practices are used in the design of these systems.

The following sections give additional elaboration on key aspects of the design philosophy.

6.1.1.2 Separation of Systems and Components

The ACR-700 safety systems are separate, to the extent practical, from the process and control systems required for the normal operation of the plant. Separation is also implemented between safety systems as in the case of the two reactor shutdown systems.

Redundant divisions of components within safety systems and safety support systems are separate as well, as far as practical. An example of separation within a safety system is the two divisions of the long term cooling system. Examples of separation within safety support systems are the two divisions within the safety related electrical power and cooling water systems.

There are a number of common cause events which could affect several systems of the plant. These common cause events include:

- Fire

- Missiles (including pipe whip)
- Extreme structural loads (e.g. due to tornado)
- Local adverse environmental conditions (temperature, pressure, humidity, radiation)
- Failure of nearby seismically unqualified systems or components

Safety support systems are designed such that, if one system or division is completely lost due to a common cause event, the remaining system or division will perform the necessary essential safety functions.

6.1.1.3 Design Philosophy Related to Achieving Full Independence between the Two Shutdown Systems

The design "philosophy" applied to the two shutdown systems is to keep them functionally and geometrically independent of each other and functionally independent of the plant regulating systems.

The functional independence between the shutdown systems is achieved by the adoption of two different shutdown principles: mechanical shutoff units for the first shutdown system and direct injection of a neutron absorbing solution into the moderator for the second shutdown system.

The geometric independence of the shutdown systems is achieved by having the shutoff rods inserted vertically at the top of the reactor and the liquid injection shutdown units inserted horizontally at the side of the reactor. Ancillary mechanical and process equipment is similarly kept apart. The shutoff unit drives are above the reactor whereas the liquid injection shutdown system is to the side of the reactor. The measurement elements of the two shutdown systems are geometrically separated.

6.1.1.4 Seismic Requirements

An earthquake is a natural event with common mode effects that are site wide. Therefore, the separation philosophy does not provide protection against an earthquake. The approach used, is to seismically qualify sufficient safety-related systems such that the safety functions listed in Section 6.1 can be met during and following an earthquake. Structures and systems requiring seismic qualification are qualified by analysis or testing, or a combination of both, as may be appropriate.

SDS1 is seismically qualified to DBE to the extent to permit shutoff rods to drop into the core on loss of electrical power to their clutch assemblies. SDS2, containment and ECC systems are seismically qualified to remain operable during and following a DBE.

6.1.1.5 Tornado Protection

The layout and structures can be designed to accommodate various levels of tornado protection up to a tornado strength of F5 on the Fujita scale. Since the frequency and intensity of tornados varies widely around the world, the design will be site-specific.

6.1.1.6 Reliability

6.1.1.6.1 Requirements

Safety systems are designed to have high on-demand availability. Reliability analysis is performed to identify failure modes of components, and to trace their effects on other components, sub-systems and systems.

6.1.1.6.2 Methodology

System testing is used to ensure that the unavailability target is met.

For both SDS1 and SDS2, for each variable monitored, a test facility is provided such that a trip condition is simulated and the entire channel is proved to operate as designed.

Regular, on-power testing of the emergency core cooling system is performed. The complete system operation cannot be tested on-power, so a series of overlapping tests are used to check sub-system operation from failure detection instrumentation to valve operation.

Test facilities and procedures are provided to confirm that the containment system (including required safety support systems) will operate satisfactorily when required. Functional testing of all containment closures and airlock doors, and leakage rate tests are performed.

6.1.2 Summary Descriptions

The following are brief descriptions of the safety systems, and safety support systems.

6.1.2.1 Reactor Containment System

The containment system is an envelope around the nuclear components of the heat transport system where failure of these components could result in the release of a significant amount of radioactivity to the public. Because of the large amounts of energy stored in the heat transport system, the envelope must withstand a pressure rise. The criterion for determining the effectiveness of the envelope is the integrated leak rate for the period of the pressure excursion. To meet the design leakage requirements two diverse principles are used. The first involves the detailed design of the envelope to minimize the leak rate. The envelope comprises a primary containment, and a system to automatically isolate or “button up” the reactor building after a loss-of-coolant accident. The second method involves a system that will absorb the energy released to the envelope, thus reducing the peak pressure and the duration of the pressure excursion. The building local air coolers do this.

6.1.2.2 Emergency Core Cooling System

Following a loss-of-coolant accident, the reactor shutdown and emergency core cooling systems acting together must, as a design target, prevent excessive fuel damage.

In the event of a major break in the heat transport system, the water escapes through the break, depressurizing the system (the blowdown phase). The reactor is tripped automatically. The combination of increase in pressure differential across the fuel sheath caused by the gaseous fission products and the increase in sheath temperature is a factor affecting the sheath failure threshold during blowdown. If the threshold is exceeded, the sheath can swell and could result in sheath rupture. However, during blowdown the sheath temperature increase is limited and excessive sheath failures are prevented. The need to remove residual heat in the fuel at the end of blowdown, and decay heat produced thereafter, leads to the requirement for an emergency core cooling system.

The emergency core cooling system is designed to supply emergency coolant to the reactor in two stages. During the high pressure stage, water is injected into the reactor core via the ECI system on detecting a LOCA. To enhance the effectiveness of this high pressure injection, the main steam safety valves are also opened on detecting a LOCA to provide a rapid cooldown of the steam generators and depressurization of the heat transport system. When the HTS pressure drops below the rupture pressure of the one-way rupture discs, the rupture discs burst, thereby enabling ECI coolant injection to the reactor inlet headers. In addition, valves on the ECI interconnect line between the reactor outlet headers, open up on detecting a LOCA to assist in establishing a cooling flow path.

For a LOCA, the LTC system is initiated during the operation of the ECI system. On detecting a LOCA, water is automatically introduced into the containment sumps and the LTC pumps start automatically. When the water accumulators are nearly empty, the ECI accumulator isolation valves close. The recovery stage begins by pumping water from the sumps into the HTS via the LTC heat exchangers. The LTC delivers flow to the reactor inlet headers, thereby utilizing the cooling path already established by the high pressure ECI system.

The LTC system is also used for long term cooling of the reactor after shutdown following other accidents and transients.

6.1.2.3 Shutdown System No. 1 (Shutoff Units)

The purpose of SDS1 is to rapidly and automatically terminate reactor operation in the event of a process malfunction that could endanger the public and the plant personnel.

The selection of parameters is such that there are adequate measurements for all identified process failures. Protection is designed for each identified process failure, using two separate trip parameters where practicable.

The system shuts down the reactor by releasing the shutoff rods, introducing negative reactivity. The system employs a logic system having three independent channels which sense the requirement for reactor trip and de-energize the direct current clutches releasing the shutoff rods into the moderator. This release is initiated when any two of the three independent trip channels are actuated. The design of the shutoff units is based on the proven CANDU 6 design with the further simplification that accelerating springs are not needed in the ACR due to the smaller size of the core and therefore the smaller distance to be travelled by the shutoff rods in the reactor.

The shutoff rods and their guides have been redesigned to fit in the reduced space available between the calandria tubes. The drive mechanisms for the shutoff units utilize design concepts that are similar to those used on CANDU 6 reactors.

The reactor will not operate without SDS1 being functional.

6.1.2.4 SDS2 (Liquid Injection Shutdown System)

The purpose of SDS2 is to rapidly and automatically terminate reactor operation independently of SDS1. The system trips the reactor by injecting liquid poison into the bulk moderator through horizontal nozzle assemblies. SDS2 employs a logic system having three independent channels which sense the requirement for this emergency shutdown and open fast-acting valves to inject a gadolinium nitrate solution into the moderator. Injection occurs when any two out of three trip channels are actuated.

The reactor will not operate at power if SDS2 is not available.

6.1.2.5 Safety Support Systems

6.1.2.5.1 Reserve Water System

The ACR design includes a reserve water system (RWS) with a reserve water tank, which is located at a high elevation in the reactor building and provides an emergency source of water to the containment sumps for recovery by the long term cooling system in the event of a LOCA. In addition, the reserve water tank provides emergency water by gravity to the steam generators (emergency feedwater), moderator system, shield cooling system and the heat transport system if required.

6.1.2.5.2 Electrical Power Supply System

The electrical power supply systems supply all electrical power needed to perform safety functions under accident conditions and non-safety functions for operational states. The safety-related portions of the systems are seismically qualified and consist of redundant divisions of standby generators, batteries, and distribution to the safety related loads.

6.1.2.5.3 Cooling Water System

The cooling water supply systems supply all cooling water needed to perform safety functions under accident conditions and non-safety functions for operational states. The safety-related portions of the systems are seismically qualified and consist of redundant divisions.

6.2 Shutdown System No. 1 (SDS1)

SDS1 is one of the four safety systems employed to carry out the safety functions specified in Section 6.1. SDS1 can quickly terminate reactor power operation and maintain the reactor in a safe shutdown condition by releasing 24 gravity-driven shutoff rods into the reactor core. These shutoff rods are made of neutron absorbing material and will terminate reactor operation whenever they are dropped into the reactor core. In addition, SDS1 employs a logic system having three independent channels, which detect the need for a reactor trip by SDS1. If two of three channels sense the requirement for SDS1 action, then a reactor trip is initiated. The shutoff unit drop logic of SDS1 allows the shutoff units to drop their shutoff rods into the reactor core by removing the direct current from the electromagnetic clutches that support the shutoff rods in their parked, out-of-core position.

The reactor must not operate unless SDS1 is declared functional. SDS1 is declared functional when a minimum of 22 out of 24 shutoff rods are in their parked, out-of-core position(a poised state).

SDS1 is fail-safe on loss of electrical power. It is independent and separate from the second shutdown system, SDS2. It is also independent of any process system.

6.2.1 Design Bases

SDS1, acting alone, is designed to provide prompt reactor shutdown following an initiating event, so that the radioactive dose limits to the public during this event are not exceeded.

To meet this requirement, SDS1 must have enough shutoff rods with sufficient speed and negative reactivity depth to effect a prompt reactor shutdown. (The combination of shutoff rod insertion speed and reactivity depth is known as “shutdown system effectiveness”). The minimum number of shutoff rods that are needed to meet the above requirements is 22.

6.2.1.1 Design Basis Events

The major classes of postulated initiating events that require prompt SDS1 action to fulfil above considerations are:

a) Loss of regulation (LOR)

b) Loss of coolant accidents (LOCA)

c) Loss of coolant flow (loss of Class IV power and HTS pump seizures)

d) Loss of secondary side heat sinks

e) Loss of moderator cooling

6.2.1.2 Functional Requirements

The main functional requirements of SDS1 are:

For design basis events, SDS1, acting alone, shall ensure that:

a) The reactor is rendered subcritical and maintained subcritical for a period sufficient to permit SDS1 to be supplemented reliably.

b) The allowable radioactive dose limits to the public are not exceeded.

c) Failures of the heat transport system pressure boundary due to overpressure, excessive fuel temperature or fuel channel failure are prevented.

d) The containment integrity is maintained by limiting both the rate of energy production within the reactor core during the event, and the total energy that could be released within the containment.

6.2.1.3 SDS1 Performance Requirements

a) Reactivity Depth

For all relevant process failures and postulated initiating events, SDS1 shall perform its function in such a manner that the allowable dose limits are not exceeded. The SDS1 negative reactivity depth and the speed of shutoff rod insertion into the reactor core must be sufficient to reduce reactor power to levels consistent with available fuel cooling. This function must be achieved with a minimum negative static reactivity depth (i.e., the two most effective shutoff rods are assumed unavailable during the event).

b) Analytical and Commissioning Verification

To substantiate the SDS1 performance requirements, both the reactivity depth and speed must be confirmed. Design-assist safety analysis determines the minimum negative reactivity depth and speed of shutoff rod insertion that fulfil the intent of the functional requirements of Section 6.2.1.2.

The shutoff rod speed requirements are given in the form of three time-to-gate performance standards. The gates correspond to three specific positions in the reactor core. Each shutoff unit must be proven capable of satisfying these performance standards before being declared to be available. If necessary, additional maintenance must be carried out on a shutoff unit to ensure that it satisfies all aspects of these performance standards. When 22 out of 24 shutoff units satisfy the performance standards, SDS1 is declared available to perform its functional requirements.

c) The reactivity depth of the shutoff rods is verified experimentally during the low power critical commissioning phase (Phase B) of the reactor. At that time, the total negative shutdown depth of all the shutoff rods is confirmed to agree with the assumptions used in the safety analysis.

d) The speed and effectiveness of SDS1 is also verified during the Phase B commissioning period. In this experiment, the 22 shutoff rods (all but the two most effective shutoff rods)

are allowed to fall into the reactor core, following an SDS1 trip and the neutron flux is measured at pre-determined positions in the reactor core. These results are compared to simulation results of the same event and the SDS1 performance/effectiveness is proven to be as good as or better than the simulation results. The verification of the SDS1 effectiveness is carried out in planned shutdowns to ensure that no deterioration in performance has taken place.

6.2.1.4 Safety Requirements

SDS1 must shut down the reactor and maintain the unit in a safe shutdown condition whenever it's called upon to do so. The SDS1 is designed to promptly shut the reactor down for the entire spectrum of accident conditions. For this, SDS1 uses two different trip parameters to terminate any postulated events that require SDS1 action. This type of redundancy provides protection against independent equipment failures. In addition, the SDS1 triple channelization, allows for maintenance and testing of SDS1 by removing a particular SDS1 safety channel from active service.

The SDS1 is designed to meet a maximum demand unavailability of $1x10^{-3}$ years per year.

6.2.2 System Description

SDS1 consists of 24 vertically-oriented shutoff units actuated on the basis of two out of three general-coincidence actuation logic initiated by neutronic and process trip parameters. The shutoff rods fall in the core under gravity.

Insertion of the shutoff rods by the disengagement of the electromagnetic clutches is the function of SDS1.

The withdrawal of shutoff rods of SDS1 is controlled by the Reactor Regulating System and this is only permitted if the reactor is not tripped. The motor and drive circuits are electrically independent of the clutch circuits, ensuring effective separation of the control and protective functions. The shutoff rods are grouped into two banks. They are normally withdrawn one bank at a time. The withdrawal logic, instrumentation and control functions are part of the regulating system. Withdrawal is halted if there is a neutron power log rate greater than seven percent per second and a positive power error. If during the withdrawal process a reactor trip occurs, then the circuit supplying power to the shutoff unit clutches is opened, the clutches disengage and the shutoff rods are inserted into the reactor by gravity. Note that during the withdrawal of the shutoff rods the reactor is subcritical. Re-insertion of the shutoff rods ensures that the reactor remains shutdown and subcritical.

6.2.3 Component Description

6.2.3.1 Shutoff Units

The shutoff unit drive mechanisms are located on the top of the reactivity mechanisms deck, directly above the shutoff unit absorber guides. Each drive mechanism consists of a housing that forms a part of the moderator system pressure boundary and supports the clutch, motor, gearing, cable sheave, the shutoff rod position sensing devices and other components that are part of the assembly. The location on the reactivity mechanisms deck is accessible during shutdown, and for limited periods at power.

Further details are provided in Section 4.1.3.2.4.

6.3 Shutdown System No. 2 (SDS2)

The liquid injection shutdown system (LISS) is a safety system and is designed to provide rapid reactor shutdown by injecting gadolinium nitrate solution into the moderator.

6.3.1 Design Bases

SDS2 must remain poised at all times except when SDS1 is poised as a backup during guaranteed shutdown. Upon receipt of trip signals, the LISS responds reliably and rapidly in performing its function. The system is physically and operationally independent from shutdown system No. 1 (SDS1), any other process systems or any other safety related system. SDS2 fails safe on loss of electrical power or instrument air.

The design bases of the LISS are listed below:

a) The safety function for the LISS is to provide a reactor shutdown by injecting gadolinium nitrate solution directly into the moderator.

   In order to achieve this the following requirements are met:

   - Provide a means of ensuring that only one of the poison tanks may be taken out of service when the system is required to be in a poised state.
   - Upon receipt of trip signals, the LISS responds adequately in performing its function.
   - The design is such that a failed component can be put into a safe state, or such that the failure can be converted to a safe failure in some other manner.
   - The system is designed such that it can be actuated manually from the main control room. It is also possible to manually initiate shutdown system action from the secondary control area (SCA).

b) The major categories of postulated initiating events that require prompt SDS2 action to fulfil the above requirements are:

   - Loss of regulation (LOR)
   - Loss of coolant accident (LOCA)
   - Loss of coolant flow (loss of Class IV power and pump seizure)
   - Loss of secondary side heat sinks
   - Loss of moderator cooling

c) The major process requirement for the LISS is to inject a neutron absorbing solution into the moderator in the reactor core when commanded to by SDS2.

d) The SDS2 negative reactivity depth and speed of injection into the core must be sufficient to reduce reactor power to levels consistent with available fuel cooling.

e) The system is designed for prompt shutdown action. During an injection, the pressure in the gadolinium nitrate tanks and liquid filled lines does not exceed the design pressure.

f) Provisions are made in order for the system to fulfil its requirements to shutdown the reactor when the reactor is at power operation.

g) A nominal or target concentration of gadolinium nitrate is to be maintained within each poison tank. The system is considered unavailable if more than one injection path is unavailable, or if the gadolinium concentration in poison injection tanks is less than that specified.

h) The SDS2 is designed to meet a maximum demand unavailability of $1x10^{-3}$ years per year.

i) The LISS and associated instrumentation is designed to retain its pressure boundary and remains operable during and/or following a DBE. It is possible to manually actuate the LISS from a seismically qualified area following a DBE.

j) The LISS equipment and instrumentation are environmentally qualified to withstand the harsh environmental conditions such as steam, water, heat, increased pressure and radiation, from plant initiated events such as loss of coolant accident (LOCA) or main steam line breaks. The LISS must remain available during and after these accidents to provide reactor shutdown.

k) The liquid injection shutdown system is protected to maintain its safety functions during and following external events:

- External fire
- Seismic
- External flooding
- Design basis tornado (DBT) (site dependent)

6.3.2 System Description

A schematic of the liquid injection shutdown system is shown in Figure 6.3-1. The neutron absorbing gadolinium nitrate solution (called “poison”) is stored in six identical pressure vessels (poison tanks) located in an accessible part of the reactor building. Each poison tank feeds one injection line, which passes through the calandria vault to an injection nozzle passing horizontally on the top and bottom of the reactor core. The poison solution is prepared in a mixing tank from which it is transported under moderate pressure to the poison tanks. A single helium supply tank contains high pressure helium, which forces the liquid poison from the poison tanks into the core.

An array of four quick-opening valves in two lines from the helium supply tank to the poison tanks isolates the poison tanks from the high-pressure helium. A floating polyethylene ball in each poison tank seals the bottom of the tank when the tank is empty of liquid, preventing the passage of helium to the calandria.

6.3.3 Component Description

The major components in the liquid injection shutdown system are the helium supply tank, quick-opening valves and gadolinium poison tanks.

6.3.3.1 Helium Supply Tank

The helium supply tank contains the high-pressure helium that provides the stored energy necessary for injection. The helium header provides take-off points for the six lines that run to the six poison tanks. The helium header helps dampen pressure transients in the poison tanks and the liquid filled lines during the initiation of the quick opening valves.

6.3.3.2 Quick-Opening Valves

Quick-opening valve array consists of four globe valves with two valves in each of two parallel lines.

6.3.3.3 Gadolinium Poison Tanks

The poison solution required in the core is stored in the poison tanks for an effective reactor shutdown.

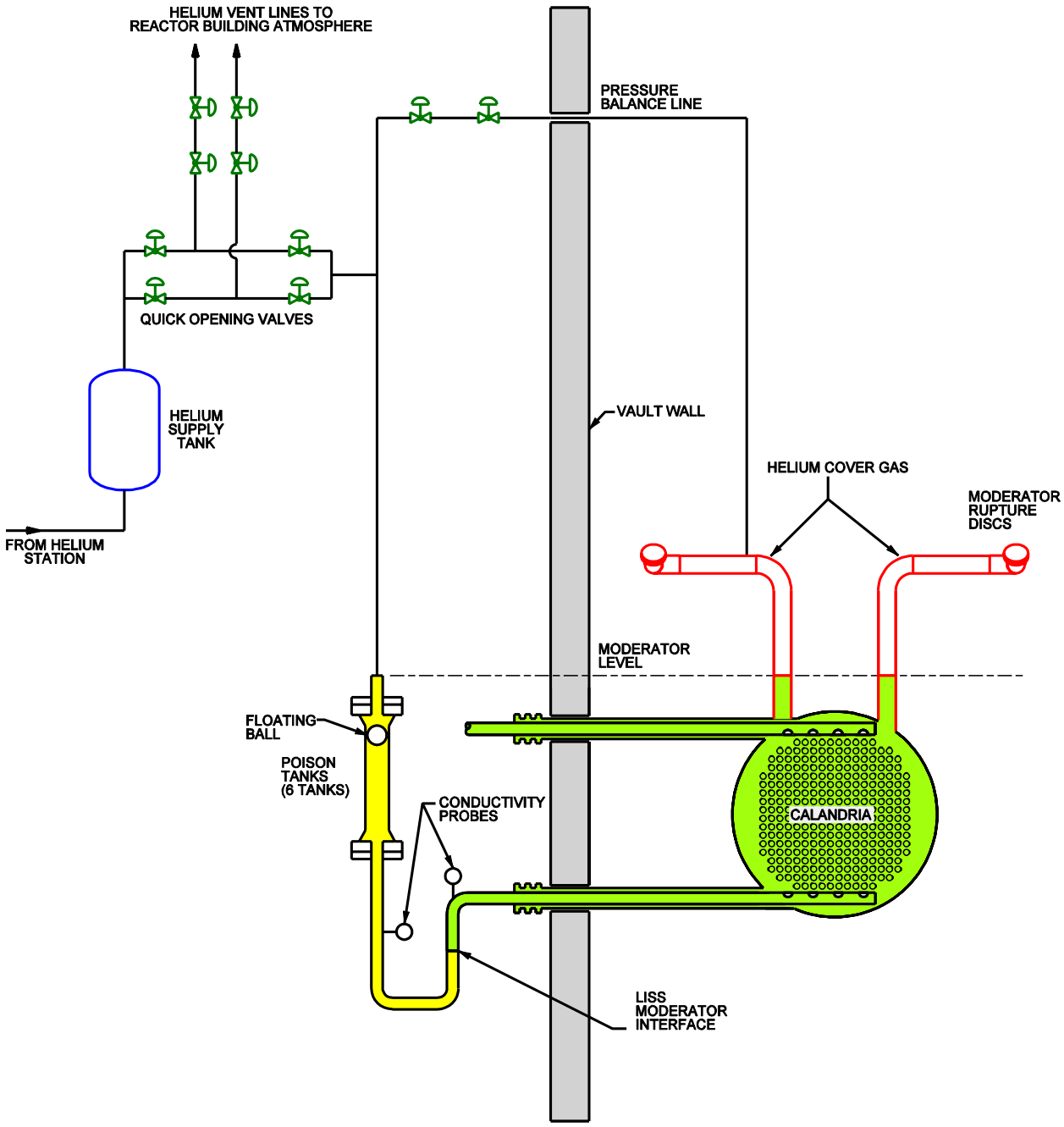

Figure 6.3-1 Schematic Diagram of the Liquid Injection Shutdown System for ACR

6.4 Emergency Core Cooling System

The emergency core cooling (ECC) system consists of two sub-systems:

- emergency coolant injection (ECI) system for high-pressure coolant injection after LOCA.
- Long term cooling (LTC) system for long term recirculation/recovery, after LOCA. The LTC system is also used for long term cooling of the reactor after shutdown following other accidents and transients.

6.4.1 Emergency Coolant Injection System

The emergency coolant injection (ECI) system constitutes the high pressure injection portion of the ECC. The ECI system function is to refill the reactor core and cool the fuel (by high-pressure injection) immediately following any accident that results in loss of HTS coolant inventory to such an extent that heat removal by normal means is not assured. During ECI operation, the LTC system will be automatically initiated to provide long-term cooling.

6.4.1.1 Design Bases

Design basis events for the emergency coolant injection system include any loss of coolant accidents, in-core or out-of-core, leading to a reduction in heat transport system inventory that cannot be made up by the feed pumps. This includes small and large header breaks, pump suction line breaks, and feeder breaks.

The design bases for the ECI are listed below:

a) ECI system can detect all loss of coolant accidents, both in-core and out-of core, causing a reduction of HTS inventory that cannot be made up by the pressure and inventory control system (leak exceeds the capacity of the feed pumps).

b) Upon detection of a LOCA, inject cooling water into the HTS to provide interim fuel cooling, remove residual (stored) and decay heat, and establish a cooling flow path for use by the LTC system.

c) The system functions with or without the availability of Class IV power.

d) The system performs successfully (fulfills all design requirements) in the event that the most effective of the two shutdown systems (i.e. SDS2) is not available.

e) During normal reactor operation the system is poised at all times to automatically detect a LOCA and initiate high-pressure injection of cooling water into the HTS.

f) Piping is designed to accommodate any water hammer pressures (if any) resulting from ECI operation.

g) The system is designed such that no air is entrained and injected into the HTS upon completion of high-pressure injection.

h) Venting devices are provided for all ECI check valves with caps/plugs to ensure pressure boundary integrity. (To purge air trapped under check valve top covers during pipe refill.)

i) The ECI system can be blocked when the reactor is shut down for maintenance and temperatures in the HTS are less than 100°C.

j) The ECI System is qualified to withstand a design basis earthquake (DBE).

k) The ECI system is environmentally qualified to withstand harsh environmental conditions during and after LOCA.

l) The ECI system is designed to meet a maximum demand unavailability of $1x10^{-3}$ years per year. In order to meet its demand unavailability, the design takes into consideration equipment redundancy, equipment fault detection, equipment maintenance, repair, and separation. The ECI system is also designed to meet single failure criteria as defined in Section 2.

m) The ability of the system to meet the unavailability on demand target is demonstrated by periodic testing of components or by continual monitoring to confirm their correct operation. The following requirements are imposed on the periodic testing facilities:

- Active components, which are required for the response of the system to a LOCA, can be periodically tested at power.
- The stroking time of all major valves is recorded as part of their periodic tests.
- The motorized injection valve testing consists of verifying the valve operation, including logic associated with automated closure.
- The ECI system will not become unavailable during testing. This generally is accomplished by providing multiple or redundant components. Temporary reduction in redundancy during testing is acceptable where it cannot be avoided. Overrides are provided wherever practical, to restore the system to its fully available condition, should a LOCA occur during testing.
- The installed configuration of the ECI system is not disturbed during testing. For example, the need for electrical jumpers or the disconnection of instrument impulse lines is not permitted.

n) For all design basis events the ECI system, operating together with the LTC system, meets the following nuclear safety requirements:

- The release of radioactive material from the fuel in the reactor is limited such that the dose limits are not exceeded in the event of an accident.
- The fuel in the reactor and the fuel channels is kept in a configuration such that continued removal of decay heat produced by the fuel can be maintained for as long as it is required to prevent further fuel damage.
- For the small LOCA events, the system prevents any failure of the fuel in the reactor due to lack of cooling. Where the initiating failure is in a fuel channel, this requirement does not apply to that channel.

6.4.1.2 System Description

A schematic diagram of the ECI system is shown in Figure 6.4.1-1.

The system consists of two ECI water accumulators; each accumulator is pressurized during normal reactor operation by compressed nitrogen gas.

A floating ball seal is located in each of the ECI accumulators. At the end of injection when the water level nears the bottom of the accumulator, pressure forces the ball against a seat at the bottom of the accumulator, creating a seal and terminating injection. This provides a passive means of defense against injection of nitrogen gas into the HTS.

Each of the two ECI accumulators is connected to one of the two heat transport system reactor inlet headers by an injection line. One-way rupture discs in the injection lines isolate the ECI system from the HTS. The one-way rupture discs withstand the high differential pressure that is normally present in the reverse direction (ECI system to HTS).

The ECI system is divided into three major operations:

- LOCA Detection and ECC Initiation
- Steam Generator Crash Cooldown
- High Pressure Injection

During normal operation the ECI system is poised to detect any LOCA that results in a depletion of HTS inventory to such an extent that heat removal by normal means is not assured. When the HTS pressure drops below the rupture pressure of the one-way rupture discs, the rupture discs burst, thereby enabling emergency coolant injection to the RIH. Water is injected into the heat transport system from the pressurized ECI accumulators. Valves on the ECI interconnect line between the reactor outlet headers (ROH) open upon detection of a LOCA to assist in establishing a sustainable cooling flow path. To enhance the effectiveness of the high pressure injection of water into the heat transport system, the main steam safety valves open on detection of a LOCA to provide a rapid cool down of the steam generators and depressurization of the heat transport system.

High pressure injection continues until the ECI accumulators are nearly empty, at which time the LTC system begins operation in long-term recovery mode. At this time the ECI injection valves close to ensure there is no injection of nitrogen gas into the HTS, this is backed up by floating ball seals inside the ECI accumulators.

6.4.1.3 Component Description

6.4.1.3.1 ECI Accumulators

Two ECI water accumulators, pressurized by a nitrogen bubble, are provided for passive, high-pressure injection. The accumulators are vertical, cylindrical structures with hemispherical top and bottom, and are constructed of carbon steel.

The pressurizing lines (nitrogen supply lines) connect to a nozzle at the top of the accumulator. Water injection is from a nozzle at the bottom of the accumulator. The accumulators are equipped with vortex breakers to prevent nitrogen entrainment during injection, and floating ball shutoffs to provide a passive means of defence against injection of nitrogen into the HTS upon completion of high-pressure injection.

During accident conditions, overpressure protection is provided by a relief valve at the top of the accumulator.

The accumulators are capable of withstanding DBE loads.

6.4.1.3.2 One-way Rupture Discs

One-way rupture discs are provided on the ECI system to isolate the ECI from the HTS. The one-way rupture discs withstand the high differential pressure that is normally present in the reverse direction (HTS to ECI), and open at a differential pressure in the forward direction (ECI system to HTS) as indicated in Table 6.4.1-1.

6.4.1.3.3 Piping and Materials

Portions of the ECI piping connecting the nitrogen bottles to the ECI accumulators are stainless steel. All remaining ECI piping is carbon steel.

6.4.1.3.4 Compressed Gas Supply

A dedicated bank of nitrogen bottles is provided for the initial nitrogen gas supply and maintenance of nitrogen gas pressure in the ECI accumulators.

6.4.1.4 Support Systems

Power systems and crash cooling system are required to function for the successful operation of the ECI system. Those systems fulfil the requirements listed in the sections following.

Power Systems

a) Valves essential to high-pressure injection are supplied from Class II power.

b) Instrumentation and logic circuits are powered from Class I and Class II power supplies.

c) The standby diesel generators start upon dectection of a LOCA.

Reserve Water System

a) The valves connecting the reserve water system to the RB sump open following detection of a LOCA.

Crash Cooling System

a) The steam generators are depressurized by discharging steam from the secondary side to the atmosphere (crash cooldown) upon detection of a LOCA as part of the ECI system response. The main steam safety valves (MSSV) are qualified to DBE.

b) Crash cooldown is initiated following detection of a LOCA.

c) The ECI system is not disabled or rendered ineffective by pipe whip resulting from a rupture in the steam or feedwater systems.

Table 6.4.1-1
ECI System Performance Specifications

High Temperature Limit for Water in ECI Accumulators	41°C
ECI Accumulator Pressure During Normal Operation	4.9 MPa (g) – 5.2 MPa (g)
Acceptable Shutdown Conditions (for Blocking ECI) Temperature	< 100°C
Differential Pressure to Burst Rupture Discs	< 0.52 MPa (d)

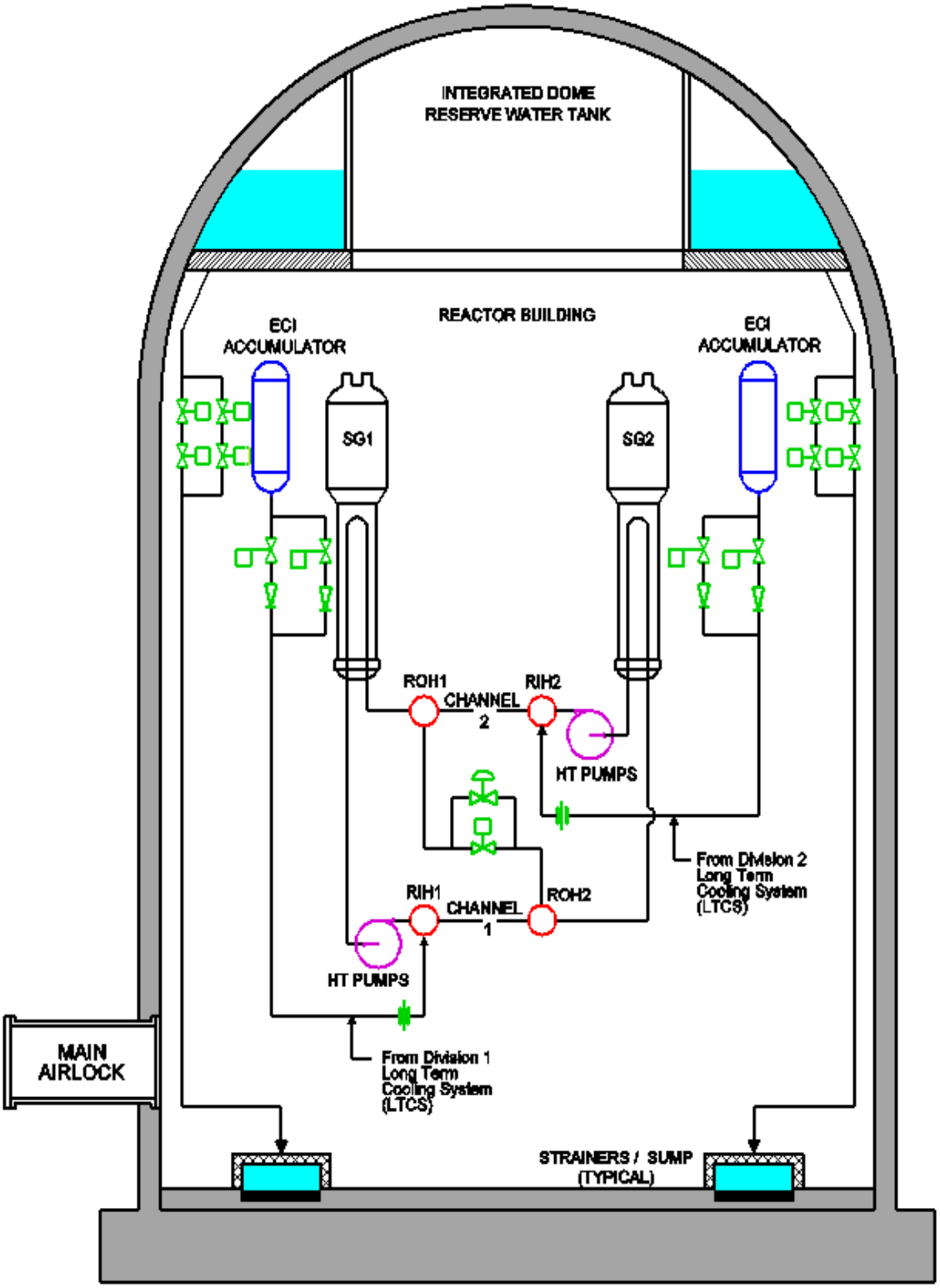

Figure 6.4.1-1 Emergency Coolant Injection System

6.4.2 Long Term Cooling System

The LTC system provides fuel cooling in the long term (recovery stage) of a loss of coolant accident (LOCA) following ECI operation, and serves to remove decay heat in the long term following transients and accidents with the HTS pressure boundary intact, or following a normal reactor shutdown.

The LTC system can remove decay heat either from an intact HTS or following a LOCA. The process equipment of this system is designed to handle the highest loads for all required modes of operation.

6.4.2.1 Design Bases

The design bases for the LTC system are listed below:

a) Following a LOCA the LTC system:

- Recover cooling water from the reactor-building floor and return it to the HTS via the LTC heat exchangers to ensure long-term fuel cooling, before or upon completion of ECI system injection.
- The LTC operating together with the ECI refills the fuel channels and provide long-term heat removal, and maintains or re-establishes cooling of the fuel and fuel channels to ensure fuel channel integrity is maintained.
- In case of LOCA with loss of Class IV power, the system functions using Class III power.
- The system withstands high radiation fields arising from the circulation of radioactive fluid during all modes of operation.
- Valves that are inside the reactor building can operate during and after exposure to the severe environmental conditions resulting from a LOCA and/or MSLB.
- Air entrainment is prevented during recovery from the sumps.
- Screens and strainers are provided in the sumps to ensure the performance of the LTC pumps and heat exchangers. The design ensures that LTC failure due to clogging of LTC flow path by insulation and other debris will not occur.

b) Following a reactor shutdown and an initial cooldown by steam discharge from the secondary side of steam generators to intermediate pressure and temperature:

- The LTC system removes all decay heat and cools the HTS to a temperature suitable for maintenance (Table 6.4.2-1) for any desired length of time.
- The LTC system allows cooling of the core with the HTS drained to header level to permit maintenance to the HT pumps and the steam generators.
- The LTC system provides a means of level control of the HTS to allow maintenance of the HTS pumps or steam generators.

- The LTC system provides a connection to the HT purification system for purification of HTS coolant during LTC operation in the shutdown cooling mode.
- The LTC system provides for automatic closing of the LTC pump seal valve whenever the pump is stopped.
- The LTC pumps and electrically operated isolation valves are designed to operate on Class III power if Class IV power is lost during shutdown.

c) All active components and major piping of the LTC system are seismically qualified.

d) Components of the LTC system, which are required to operate and are subjected to adverse environmental conditions during and after a LOCA, are qualified for the worst anticipated conditions.

e) In order to ensure a high degree of reliability for ACR-700, methods such as equipment redundancy and equipment fault detection are employed, and special attention is given to equipment maintenance, repair and separation. The LTC system is also designed to meet its performance requirements and single failure criteria as defined in Section 2.

f) Dedicated test facilities are provided to allow regular on-power testing of components and to confirm that the LTC system operates correctly when called upon. A series of overlapping tests are designed to check subsystem operation from instrumentation operation to valve operation, motor operation, etc., without causing the system to be unavailable during any testing.

g) Portions of the ECC system penetrate containment forming extension of containment. The LTC system, which is required to be open to the containment atmosphere following an accident, form a closed containment boundary outside the containment structure and it is continuously monitored for leaks.

6.4.2.2 System Description

The system consists of two divisions, each containing two pumps and one heat exchanger at each end of the reactor and is shown in Figure 6.4.2-1. The LTCS is connected to the reactor inlet headers, reactor outlet headers and the reactor building sumps. The design is such that the LTCS can provide normal shutdown cooling, and post-LOCA recovery and injection following a LOCA.

During normal shutdown cooling, only one division, with one pump in operation, is required to provide the adequate cooling however both divisions are operated for reliability. Flow is from the reactor outlet header to the inlet header via the LTCS pump, and LTCS heat exchanger.

For LOCA operation, both divisions operate with each division recovering water from the respective reactor building sump.

The LTCS major equipment (pumps and heat exchangers) are located outside the reactor building. The entire system is below the reactor header level. The LTCS is isolated from HTS during normal reactor operation and is poised for operation.

Isolation between the HTS and LTCS are provided by two motorized valves in series with leak detection. LTCS is connected to the ECI system upstream of rupture disc by two check valves in parallel inside the reactor building and two parallel motorized valves outside the reactor building. This line is used for long term circulation/recovery after a LOCA.

For the long term cooling mode the LTCS operation collects a mixture of the reserve water dumped to the sumps and spilled heat transport water from the reactor building sump and pumps it back to the heat transport system via heat exchangers.

Two separate suction lines are provided on each LTC division. These lines run through the concrete basement slab. Each suction line contains a check valve and a normally closed valve. This valve acts as a containment isolation valve.

The LTCS pumps are designed to receive suction from either of the sump. The two lines from the sumps are connected by a normally open motorized valve which connects the suction side of the LTCS pumps. Strainers located above the suction intakes prevent foreign objects from entering the system. Trash screens around the strainers prevent them from becoming clogged by large objects.

The LTCS heat exchangers provide the long term heat sink with RCW system providing the cooling flow.

6.4.2.3 Component Description

6.4.2.3.1 LTCS Pumps

Four vertically mounted, centrifugal type, electrically driven pumps are provided in the LTC system.

The LTC pump is located below the sump level. The pump motor unit is normally accessible during reactor operation for inspection and maintenance.

Temperature detectors are incorporated to provide thermal indication for the bearings, the seal and the motor windings. Thrust is taken by the bearings in the motor.

6.4.2.3.2 LTCS Heat Exchangers

Two horizontal U-tube and shell type heat exchangers are provided in the LTC system. The LTCS heat exchangers are designed to remove the required decay heat load while keeping the pressure drop across the heat exchanger in the tube and shell side below the maximum acceptable pressure drop in various modes of operation.

Each heat exchanger is cooled by the NSPRCW system.

6.4.2.3.3 LTC Pump Suction Strainer

Two strainers, one per pump suction inlet, are provided in the reactor building floor to prevent foreign objects from entering the system. The strainer is designed to meet the following requirements:

- The LTCS sump screen must not pass debris that is capable of damaging both of the LTC system pumps or plugging both of the LTC system heat exchangers over the 3 month operating period of the post-LOCA recovery mode.
- The LTCS sump screens do not plug up to the extent that they will impair system performance over the 3 month operating period, and they don't fail due to the pressure resulting from debris buildup.
- The minimum required NPSH of the LTCS pumps is always available to provide adequate pump performance without cavitation. The available NPSH for the LTCS pumps is calculated at the maximum sump water temperature resulting from only one of the two heat exchangers providing the cooling. The LTCS sump screen surface area is large enough to minimize pressure drop through the screen such that available NPSH requirement for the LTC system pumps is met.
- There is no vortexing at the inlet of the LTCS pump suction piping and the hydraulic performance of the pumps is not degraded due to air ingestion effects.
- The LTCS sump screen is capable of withstanding an earthquake (DBE) to ensure the functionality of LTC system in post-LOCA recovery mode over the 3 month operating period.

In summary, LTCS pump performance to maintain sufficient recirculation flow as a result of sump screen blockage, cavitation or air ingestion effects is not degraded.

6.4.2.3.4 Valves

Power Operated Valves

Butterfly valves, with a metallic seal, are used for the low pressure part of the LTC system. Ball and gate valves are used for high pressure portions.

All large low pressure valves are flanged for ease of maintenance, while all high pressure valves are welded in order to minimize leakage.

Redundant valves in parallel are provided wherever power operated valves are required to open for LTC operation. The valves on cooling water lines to the heat exchangers are similarly duplicated. The opening of any one of the redundant valves provides sufficient flow.

Check Valves

The LTC check valves are located in normally stagnant lines, and hence require test mechanisms to ensure that they are free to open.

Testing to demonstrate the availability of testable swing check valves consists of stroking each valve using the test mechanism, to ensure that it is free to open. During this test the check valve's ability to open on a positive forward differential is not impaired and hence the effectiveness of the LTC system is not diminished.

Relief Valves

Relief valves are provided for the protection of LTC equipment and piping.

6.4.2.4 Support Systems

A number of support systems are required to function for the successful operation of the LTC system over the various modes of operation.

6.4.2.4.1 Power Systems

Within each pair of pumps, one pump is supplied from an independent Class III electrical power bus (either 'ODD' or 'EVEN'). Within each pair of redundant (parallel) valves, one valve is supplied from 'ODD' power and the other from an independent 'EVEN' power system. Valves and all necessary instrumentation are provided for by the Class I and II uninterruptible power supplies.

6.4.2.4.2 Water Systems

The safety support cooling water systems comprise: NSPRSW system, NSP RCW system,, and reserve water system.

a) NSP RSW system

   It is needed to cool the recirculating cooling water (see Section 9.2).

b) NSP RCW system

   It is needed to supply cooling water to the LTC heat exchangers (see Section 9.2).

c) Reserve water system

   On detection of a LOCA, water is automatically introduced from the reserve water system into the containment sumps to facilitate the operation of the LTC system.

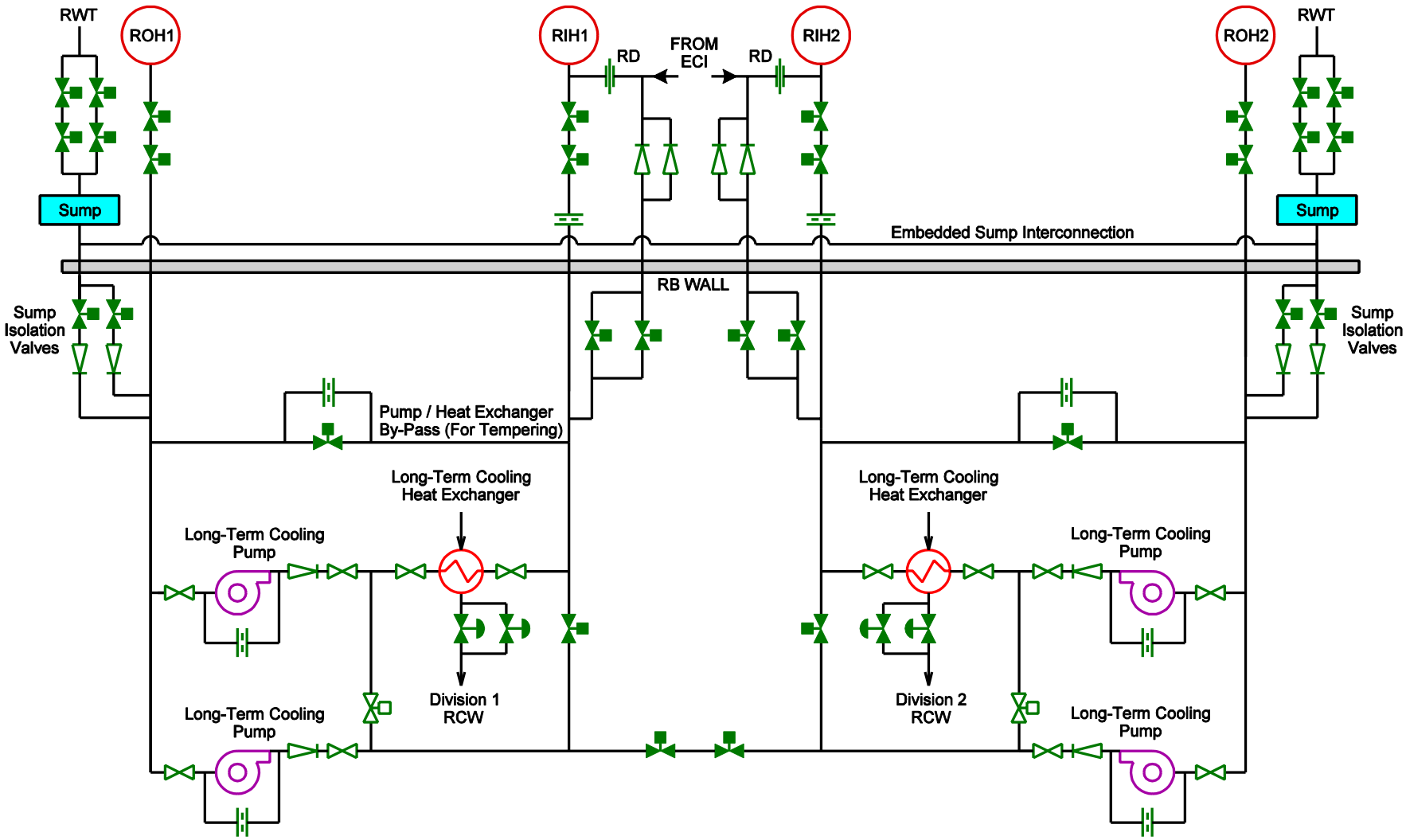

Figure 6.4.2-1 Schematic Diagram of the LTC System

6.5 Containment

The containment system is designed to restrict the release of radioactivity to the environment within the maximum permissible dose limits in the event of a radioactivity release within the containment envelope. This is achieved by limiting the level and period of overpressure following an accident and designing the containment envelope for minimum leakage.

The containment barrier is established using a combination of structures, isolation devices, and metallic extensions of the containment envelope. In addition to the basic containment structure (reactor building), the containment system includes airlocks, process penetrations (with automatic isolation where appropriate, in the case of an accident) and electrical penetrations together with subsystems where needed for reducing containment internal pressure, controlling hydrogen concentrations, and limiting the release of radioactive material to the environment following an accident.

The following structures and systems make up the containment system.

6.5.1 Containment Envelope

a) Reactor Building

b) Airlocks

c) Containment Isolation System

d) Extensions and Appurtenances

e) Spent and New Fuel Transfer Systems

6.5.1.1 Energy Suppression Systems

a) Reactor Building Air Coolers

6.5.1.2 Atmospheric Control Systems

a) Hydrogen Control System

6.5.2 Design Bases

The containment is designed to meet the applicable requirements, which embody both design and performance requirements.

The containment boundary (except the penetrations between the reactor building and spent fuel discharge (SFD) room), the containment isolation system and the containment extensions are qualified to the design basis earthquake (DBE).

6.5.2.1 Containment Envelope

6.5.2.1.1 Reactor Building

Design Pressure

The containment structure is designed to meet loss of coolant accident (LOCA) and main steam line break (MSLB) pressures as shown in Table 6.5-1 with a proof pressure test to be carried out as required. The objective of the pressure proof test is to demonstrate the structural integrity of all parts of the containment envelope and the containment system.

LOCA pressure is defined as the maximum pressure reached inside containment following the limiting design basis pipe break in the heat transport system.

MSLB pressure is defined as the maximum pressure reached inside containment following the limiting design basis pipe break of the main steam line.

For pipe breaks in the steam or feedwater lines inside the reactor building, there is no release of radioactive material into the containment. The requirement for these events is to maintain the structural integrity of containment.

Leakage Rates

- Test Acceptance Leakage Rate

  The test acceptance leakage rate is the maximum acceptable leakage rate that should not be exceeded during the testing and commissioning phase of the construction of the reactor building or at any time during subsequent pressure tests of the reactor building. The test acceptance leakage rate is specified in Table 6.5-1.

6.5.2.1.2 Airlocks

Since the airlocks form part of the containment envelope they must meet the design requirements stated in Section 6.5.2.1.1 to maintain containment envelope integrity. A continuous monitoring is provided to ensure a low unavailability.

6.5.2.1.3 Containment Isolation System

The containment isolation system provides the means of isolating systems that pass through containment penetrations such that any radioactivity that may be released into the containment following a postulated design basis accident will be confined. The containment isolation systems are required to function following a design basis event to isolate non-safety-related systems from penetrating the containment. There is no particular system for complete containment isolation, but isolation design is achieved by applying acceptable common criteria to penetration in many different fluid systems and by using containment pressure to provide a containment isolation actuation signal as described below to actuate appropriate valves.

The design bases for the containment isolation systems include provisions for the following:

- A double barrier at the containment penetration in those systems that are not required to function following a design basis event.
- Automatic and leaktight closure of those valves required to close for containment integrity following a design basis event to minimize release of any radioactive material
- A means of leak testing barriers in systems that serve as containment isolation.
- The capability to periodically test the operability of containment isolation valves.

The piping systems and related components penetrating the containment are provided with leak detection, isolation, and containment capabilities having redundancy, reliability, and performance capabilities that reflect the importance to safety of isolating these fluid systems. The containment leakage test program provides for periodic testing to determine if valve leakage is within allowable design limits and to test the operability of the isolation valve and associated components. Isolation valves are located as close as practical to the containment. All automatic valves are designed with a failure position that provides the greatest safety.

Two independent signals for closing the containment ventilation lines are provided for the ACR generic design. This ensures a very high reliability of containment isolation so that dual failures of LOCA with impaired containment need not be considered in the licensing accident analyses.

6.5.2.1.4 Extensions and Appurtenances

- Containment extensions, consisting of systems, or sections of systems, which form part of the containment boundary.
- Containment isolation components are seismically qualified according to the following criteria:
  - For systems in which the isolation valves are normally open, and which are also open to the containment atmosphere or connected to heat transport system, two isolation barriers (i.e., two open valves) is be qualified to close during or after the DBE.
  - For systems in which the isolation devices are normally closed or which form closed systems inside or outside the containment structure, only one isolation barrier (i.e., one closed valve) is required to be qualified to the DBE.
- The containment isolation system (CIS) valves are tested periodically. Full closure test is performed on all CIS valves, including their control logic. CIS valves larger than 1 inch and located on lines carrying gaseous flows are also tested for leak tightness.

6.5.2.1.5 Spent Fuel Transfer and New Fuel Transfer

See Sections 6.5.3.1.3 and 6.5.3.1.4 respectively.

6.5.2.2 Reactor Building Air Coolers

The local air coolers (dome and SG vault) suppress the pressure inside containment and continue to operate to reduce the reactor building pressure to about atmospheric pressure following a loss of coolant accident (LOCA). They are environmentally and seismically qualified and they also assist in the dispersion of hydrogen.

6.5.2.3 Atmospheric Control Systems

6.5.2.3.1 Hydrogen Control System

Hydrogen control is accomplished through the following two mechanisms:

a) The containment atmosphere is thoroughly mixed to prevent local pockets of high hydrogen concentration. The reactor building (RB) cooling system local air coolers (LACs), mix the atmosphere between the accessible and inaccessible areas of containment.

b) Long-term hydrogen removal is provided by a hydrogen control system.

Passive autocatalytic recombination or a combination of recombiners and igniters is the primary hydrogen removal mechanism in the long-term. The hydrogen control recombiners which use a catalyst to combine hydrogen and oxygen, producing water vapour. The recombination reaction is as follows:

$$H_2 + \frac{1}{2} O_2 \rightarrow H_2O + \text{heat}$$

The recombination reaction is exothermic and causes a convective flow through the device which enhances mixing of the building atmosphere. Passive recombiners are provided for the system. This type of recombiner does not require electrical power to start, or the containment isolation signal for activation.

To assist low hydrogen concentration inside the reactor building, the fans of the vault and dome coolers provide continuous mixing of air and hydrogen. The features of these coolers that are relevant to air/hydrogen mixing are as follows:

a) They are oriented so that the direction of their forced air flows is complementary to the natural convection flows expected in the reactor building following a LOCA.

b) Their fans (and motors) are environmentally qualified to assure operation during the harsh environment following a LOCA.

6.5.2.4 Instrumentation and Logic

See Section 7.2.4.

6.5.3 System Description

6.5.3.1 Containment Envelope

The containment envelope is defined by the containment structures and extensions. A simplified version of the containment envelope is shown in Figure 6.5-1.

6.5.3.1.1 Structures

General

The containment structure includes a prestressed concrete cylindrical wall, spherical dome and a reinforced concrete base slab lined with steel liner.

The containment structure is designed to meet loss of coolant accident (LOCA) and main steam line break (MSLB) pressures as shown in Table 6.5-1 with a proof pressure test to be carried out as required. The test is carried out during commissioning.

The net total volume of the building within the containment envelope is shown in Table 6.5-1.

Liners

Carbon steel liner is used as liner system for the reactor building to limits the release of radioactive material to the environment during normal operation and during and after accident condition. Steel liner is attached to the internal surface of the perimeter wall the dome and the base slab of the containment structure.

The steel liner on the wall and the dome internal surface acts as a continuous membrane that allows the structure to fulfil the leak tightness requirement. The steel liner is seal welded to the airlock, mechanical, electrical penetrations to form a complete containment envelope. The steel liner is not required to contribute to the strength of the containment structure.

Embedded Parts

All embedments in the concrete of the containment structure are metallic carbon steel, or stainless steel. These include the mechanical penetrations and electrical and control cable penetrations.

All electrical penetrations consist of a flanged nozzle embedment with a header plate sealed to the flange on the outside end by dual concentric o-rings. The header plate contains a number of pass-throughs which are double sealed for containment. The space between the seals is monitored for leakage. This verifies the electrical containment penetration.

All embedments have flanges on the containment surface (inside the building) that are seal welded to the steel liner for continuation of the containment liner, and to provide a surface to receive seal plates which are to be welded. These flanges are prepared by white metal sandblasting and zinc priming treatment for carbon steel, or by roughening for stainless steel.

Embedded steel flanges are provided on all through embedments as an additional gas barrier, and to increase the leak path.

Flange connections are provided on the outside for welded or bolted attachment of sealing plates or bellows, except for embedded process water piping, in which case both ends are prepared for circumferential welding.

Internal Structures

The combinations of loads include asymmetric pressure transients which are used in the design of internal structures for accident conditions.

Steam Main Restraints

The steam mains are provided with restraints anchored to the internal structure to resist vertical movement of the steam mains on failure. The steam main is seismically qualified up to the first anchor point outside containment.

Steam Generator Restraints

The steam generator is anchored to the internal structure to resist the forces imposed by the complete fracture of a steam pipe.

Atmospheric Separation

It is necessary to prevent air from the accessible area mixing with that from the rest of the reactor building. However, pressure equalization in the building must be obtained during an accident.

6.5.3.1.2 Extensions

General

Extensions of the containment envelope include the following;

a) Systems open on one side of the containment boundary,

b) Open systems,

c) Airlocks,

d) Sealed penetrations.

Systems Open on One Side of the Containment Boundary

Systems closed within containment, which pass through the containment boundary, and which are open to the atmosphere outside containment, are part of the containment envelope. Similarly a system closed outside containment, and open to the atmosphere inside containment, is part of the containment envelope. Examples are the service water system and compressed gas supply systems, respectively.

Open Systems

Systems open within containment, which present a leakage path through the containment boundary, to the atmosphere outside containment, are provided with two series automatically closing containment dampers or valves on each leakage path. The ventilation system is an example.

Airlocks

Airlocks are provided for personnel and equipment transfer. The airlocks are equipped with twin face type solid elastomeric seals. The seals are capable of carrying the full containment pressure without exceeding the allowable leakage. The seals also meet their performance requirement following an exposure to the radiation dose.

Sealed Penetrations

Sealed penetrations implies, for all practical containment purposes, to permanently closed penetrations.

Containment Isolation

Containment isolation, by automatic closure of containment designated valves is initiated when the reactor building pressure exceeds the value indicated in Table 6.5-1 or high radioactivity levels is detected in either the ventilation exhaust from the reactor building or the steam generators room.

Figure 6.5-2 indicates those lines with valves that close automatically with the indication CIS in the column for automatic isolation. The containment penetrations and isolation valves are parts of the individual systems that penetrate containment.

Pressure Sensors

Triplicated pressure sensors are provided for containment isolation initiation on high building pressure.

Activity Sensors

Two sets of triplicated activity monitors are provided for containment isolation. One set located in the ventilation system exhaust and the other in the steam generator Vault. The monitors are designed to be fail safe, that is, each monitor indicates high activity on failure.

6.5.3.1.3 Spent Fuel Transfer System

The spent fuel (SF) transfer system transfers spent fuel through containment, from the fuelling machines inside the reactor building (RB), to the spent fuel storage bays located in the reactor auxiliary building (RAB). The SF transfer system comprises two sub-systems, each one

servicing one of the two fuelling machines. Since SF movement is accomplished using hydraulic drag, the two sub-systems share a common SF transfer process system.

Each sub-system comprises the following components:

- The SF transfer port that passes through the RB containment wall. An end fitting is attached to the transfer port within the RB, to allow the fuelling machine to clamp and seal to it.
- Two containment isolation valves, one on each side of the containment building wall. These full-bore valves provide a smooth passage for the fuel bundles.
- The SF transfer pipe in the RAB that provides a passage for the SF between the containment boundary and the SF reception bay.
- The SF transfer mechanism magazine, which is a closed vessel submerged in the reception bay, into which the SF is transferred before being discharged into the reception bay.
- Two full-bore isolation valves, one between the transfer pipe and the transfer mechanism magazine, and another on the discharge port of the magazine. These full-bore valves provide a smooth passage for the fuel bundles.

The main components of the SF transfer process system, such as the storage tank, pumps heat exchanger, control valve and most of the isolation valves are located in the RAB. Process pipes that pass through the containment wall are provided with containment isolation valves on both sides of the containment wall.

The containment valves are designed to withstand the differential between the reactor building containment pressure and any pressure of the SF transfer process system from atmospheric pressure up to its design pressure in the event of any one of the accidents listed in Table 1 of R-7.

The following sections outline how the spent fuel transfer system maintains the ability to establish containment or maintains containment under given service conditions:

a) **Normal operation for spent fuel transfer**

- Prior to opening any containment isolation valves, the fuelling machine is clamped and sealed to the SF transfer port, and its pressure is adjusted to be significantly higher than the maximum RB pressure. The fuelling machine and its water system are a closed system during SF transfer.
- Prior to opening any containment valves, the isolation valve on the transfer mechanism magazine discharge port is confirmed closed, in which case the SF transfer system and its process system are a closed system.
- With the above conditions satisfied, the <u>outer</u> SF transfer port containment isolation valve, the isolation valve between the transfer pipe and the transfer mechanism magazine, and the containment isolation valves on the process piping are opened, the pump is started, and the system is set up for SF transfer by hydraulic drag, with the pressure significantly higher than the RB design pressure.

- The inner SF port containment isolation valve is opened, linking a closed system inside containment (fuelling machine and its water system) to a closed system outside containment (SF transfer system and its process system).
- The fuelling machine pushes the fuel bundles, one pair at a time, just beyond the inner SF port containment isolation valve and into the hydraulic flow. The flow transports the fuel into the transfer mechanism magazine.
- Once all the fuel has been transferred, the inner SF port containment isolation valve is closed, severing the link between the inner and outer closed systems.
- The pump is stopped, and then the outer SF port containment isolation valve, the isolation valve between the transfer pipe and the transfer mechanism magazine, and the containment isolation valves on the process piping are closed.
- The fuelling machine checks for pressure leaking across the inner SF port containment isolation valve and is then permitted to unclamp from the SF port.
- With the isolation valve between the transfer pipe and the transfer mechanism magazine closed, the isolation valve on the transfer mechanism magazine discharge port may be opened to discharge the fuel from the magazine into the reception bay.

During SF transfer, the SF transfer system pressure is monitored, with control room annunciation if the pressure drops in the transfer tube to a point at which it is low but still above the maximum RB pressure.

Safety interlocks prevent opening of any of the SF transfer containment isolation valves unless the fuelling machine is located at the SF transfer port and clamped, the isolation valve on the transfer mechanism magazine discharge port is closed, and the SF transfer process system pressure is above the RB design pressure. Safety interlocks prevent opening of the isolation valve on the transfer mechanism magazine discharge port unless all the containment isolation valves are closed.

b) **Normal operation not during spent fuel transfer**

When spent fuel transfer is not taking place (the port idle mode), the inner and outer SF port containment isolation valves are closed, and the containment isolation valves on the process piping are closed.

The fuelling machine may or may not be clamped and sealed to the end fitting inside the RB. The transfer tube and attached process equipment in the RAB are a closed system. The transfer tube and the attached process piping up to isolation valves are at a pressure above the RB design pressure, with control room annunciation if the pressure drops to a point at which it is slightly above the RB design pressure.

Safety interlocks prevent opening of any of the SF transfer containment isolation valves unless the fuelling machine is located at the SF transfer port and clamped, the isolation valve on the transfer mechanism magazine discharge port is closed, and the SF transfer tube and attached process system up to the isolation valves are above the RB design pressure.

c) **During and following a LOCA or MSLB**

All the containment isolation valves will be environmentally qualified for the internal and external pressure, temperature and radiation conditions they will be exposed to.

If the SF transfer containment isolation valves are closed at the time of a LOCA or MSLB, they will remain closed to maintain containment.

If the containment isolation valves are open at the time of a LOCA or MSLB:

- The inner SF port containment isolation valve will be closed provided that neither the fuel nor the fuelling machine ram is straddling the valve. Otherwise, it may have to remain open since the fuelling machine ram drive is not environmentally qualified, and may cease to function. The closed systems, comprising the FM and its water system, the transfer port, and the SF transfer system with its process system up to the isolation valves, are maintained above the RB design pressure.
- The outer SF port containment isolation valve and the containment isolation valves on the process piping will remain open until any fuel in transit through the SF port has passed beyond the outer SF port containment isolation valve, at which point they will be closed.
- The isolation valve between the transfer tube and the transfer mechanism magazine will also be closed at the same time.
- In the meantime, the isolation valve on the transfer mechanism magazine discharge port will remain closed, and the fuelling machine will remain clamped and sealed to the SF transfer port to maintain a closed system comprising the FM and its water system, the transfer port, and the SF transfer system with its process system up to the isolation valves.

d) **During and following a Seismic Event**

The containment isolation valves, and all components and equipment of the SF transfer system that must maintain their pressure boundary and/or function to provide a closed system if the containment valves are open, shall be seismically qualified.

If the SF transfer containment isolation valves are closed at the time of a DBE, they will remain closed to maintain containment.

If the containment isolation valves are open at the time of a DBE:

- The <u>inner</u> SF port containment isolation valve will be closed provided that neither the fuel nor the fuelling machine ram is straddling the valve. Otherwise, it may have to remain open since neither the pump that provides hydraulic drag nor the fuelling machine ram drive is seismically qualified and neither may continue to function.
- The <u>outer</u> SF port containment isolation valve will be closed provided that the fuel is not straddling the valve. Otherwise, it may have to remain open since the pump that provides hydraulic drag is not seismically qualified and may not continue to function.
- The isolation valve between the transfer pipe and the transfer mechanism magazine will be closed provided that the fuel is not straddling the valve. Otherwise, it may have to

remain open since the pump that provides hydraulic drag is not seismically qualified and may not continue to function. Note that if fuel is straddling this valve, it cannot be straddling the outer SF containment isolation valve.

- The containment isolation valves on the process piping will be closed.
- In the meantime, the isolation valve on the transfer mechanism magazine discharge port will remain closed, and the fuelling machine will remain clamped and sealed to the SF transfer port to maintain a closed system comprising the FM and its water system, the transfer port, and the SF transfer system with its process system up to the isolation valves.

6.5.3.1.4 New Fuel Transfer System

The new fuel (NF) transfer system transfers new fuel through containment, from the new fuel transfer mechanisms located in the reactor auxiliary building, to the fuelling machines inside the reactor building. The NF transfer system comprises two sub-systems, each one servicing one of the two fuelling machines.

Each sub-system comprises the following components:

- The NF transfer port that passes through the RB containment wall. An end fitting is attached to the transfer port within the RB, to allow the fuelling machine to clamp and seal to it.
- Two containment isolation valves adjacent to each other outside the containment building wall. These full-bore valves provide a smooth passage for the fuel bundles.
- The NF transfer mechanism magazine, which is a closed vessel in the reactor auxiliary bay, into which the NF is loaded before being transferred to the fuelling machine
- A full-bore isolation valve on the loading port of the magazine. This full-bore valve provides a smooth passage for the fuel bundles.

The containment valves are designed to withstand the differential between the reactor building containment pressure and any pressure of the NF transfer system from atmospheric pressure up to its design pressure in the event of any one of the accidents listed in Table 1 of R-7.

The following sections outline how the new fuel transfer system maintains the ability to establish containment or maintains containment under given service conditions:

a) **Normal operation during new fuel loading**.

With the two containment isolation valves closed, the isolation valve at the loading port of the transfer mechanism magazine is opened. The new fuel is pushed through the valve and into the magazine. Once the transfer magazine has been loaded with fuel, the open isolation valve is closed.

Safety interlocks prevent opening of either of the NF transfer containment isolation valves unless the fuelling machine is located at the NF transfer port and clamped, the isolation valve

on the transfer mechanism magazine loading port is closed, and the NF transfer magazine pressure is above the RB design pressure.

b) **Normal operation during new fuel transfer**.

- Prior to opening any containment isolation valves, the fuelling machine is clamped and sealed to the NF transfer port, its water level is lowered to below its snout and its cover gas pressure is adjusted to be significantly higher than the RB design pressure. The fuelling machine is a closed system during NF transfer.
- Prior to opening any containment valves, the isolation valves on the transfer mechanism magazine are confirmed closed, in which case the NF transfer system is a closed system.
- With the above conditions satisfied, the both NF transfer port containment isolation valves are opened, and NF transfer proceeds.
- Once the NF transfer operation is complete, the containment valves are closed. The transfer magazine is maintained at a pressure above the RB design pressure.

Safety interlocks prevent opening of either of the NF transfer containment isolation valves unless the fuelling machine is located at the NF transfer port and clamped, the isolation valve on the transfer mechanism magazine loading port is closed, and the NF transfer magazine pressure is above the maximum RB pressure.

c) **Normal operation not during new fuel loading or transfer.**

When neither NF loading nor NF transfer is taking place (the port idle mode), the inner and outer NF transfer port containment isolation valves are closed, the isolation valves on the transfer mechanism magazine are closed, and the magazine is maintained at a pressure above the RB design pressure.

The fuelling machine may or may not be clamped and sealed to the end fitting inside the RB.

Safety interlocks prevent opening of either of the NF transfer containment isolation valves unless the fuelling machine is located at the NF transfer port and clamped, the isolation valves on the transfer mechanism magazine are closed, and the NF transfer magazine pressure is above the RB design pressure.

d) **During and following a LOCA or MSLB.**

Both NF port containment isolation valves will be environmentally qualified for the applicable internal and external pressure, temperature and radiation conditions.

If the containment isolation valves are closed at the time of a LOCA or MSLB, they will remain closed to maintain containment.

If the containment isolation valves are open at the time of a LOCA or MSLB:

- The inner NF port containment isolation valve will remain open until any fuel in transit trough the NF port has passed beyond the inner SF port containment isolation valve, and the transfer ram has been retracted behind the valve, at which point it will be closed.

- The outer NF port containment isolation valve will remain open until any fuel in transit trough the NF port has passed beyond the inner SF port containment isolation valve, and the transfer ram has been retracted behind the valve, at which point it will be closed.
- In the meantime, the FM remains a closed system clamped and sealed to the NF port.

e) **During and following a Seismic Event.**

The containment isolation valves, and all components and equipment of the NF transfer system that must maintain their pressure boundary and/or function to provide a closed system if the containment valves are open, shall be seismically qualified.

If the containment isolation valves are closed at the time of a DBE, they will remain closed to maintain containment.

If the containment isolation valves are open at the time of a DBE:

- The inner NF port containment isolation valve will be closed provided that neither the fuel nor the transfer ram is straddling the valve. Otherwise, it may have to remain open since transfer ram drive is not seismically qualified and may not continue to function.
- The outer NF port containment isolation valve will be closed provided that neither the fuel nor the transfer ram is straddling the valve. Otherwise, it may have to remain open since transfer ram drive is not seismically qualified and may not continue to function.
- If neither NF port containment isolation valve can be closed, the NF magazine and its loading port isolation valve maintain a closed system.
- Whether or not the NF port containment isolation valve can be closed, the FM remains a closed system clamped and sealed to the NF port.

6.5.3.2 Reactor Building Air Coolers

SG vault and dome coolers have Class III power supply to the fans. Cooling water supply to these coolers is also powered by Class III power supply. SG vault and dome coolers and associated active components are seismically qualified to DBE. Half of the major reactor building coolers (4 SG vault and 2 dome LACs) are credited in the safety analysis as a heat sink for postulated loss of coolant accidents (see Figure 6.5-1).

6.5.4 Safety Aspects

6.5.4.1 Reliability

The overall containment system is designed to meet a maximum demand unavailability of 1×10^{-3} years per year.

The key components of the containment system which must be monitored for availability are:

a) Airlock seals and door closure.

b) Containment isolation system - at least one of two automatic isolation valves in each open penetration can be closed.

c) Leak tightness tests (airlocks, isolation valves, containment envelope).

d) Local air coolers - at least 6 out of 12 Class III local air coolers (LACs) are available.

e) Spent fuel transfer containment isolation valves.

f) Hydrogen control system

6.5.4.2 Independence

6.5.4.2.1 Independence between Containment and Emergency Coolant Injection and Long Term Cooling System

To ensure that failure of emergency core cooling and containment could not be caused by a single common-mode fault, the two systems (ECC and containment) are designed to be independent of each other.

6.5.4.2.2 Independence between Containment and Process Systems

a) A heat transport pipe rupture will not result in a local breach of containment (except for steam generator tube).

b) The containment system may rely on certain process systems (e.g., service water, air, power). Reliability of such systems is such that the overall reliability targets are met.

6.5.4.3 Seismic Qualification

The containment, except for certain portions of the spent fuel transfer system, is seismically qualified for a design basis earthquake (DBE).

Sufficient monitoring and test equipment must be qualified if its failure could fail the functional part of the system.

Table 6.5-1
Containment System Performance Specifications

Description	Value
Normal Containment Pressure	- 0.62 kPa(g)
Designed for: LOCA Pressure MSLB Pressure	250 kPa(g) 450 kPa(g)
Containment Volume	The free volume within the containment envelope used for containment analysis is 47,800 m^3
Radiation Detector Setpoint	3000 cps
Pressure Detector Setpoint	3.45 kPa
Test Acceptance Leakage Rate	0.2% volume/day at the LOCA pressure of 250 kPa(g)

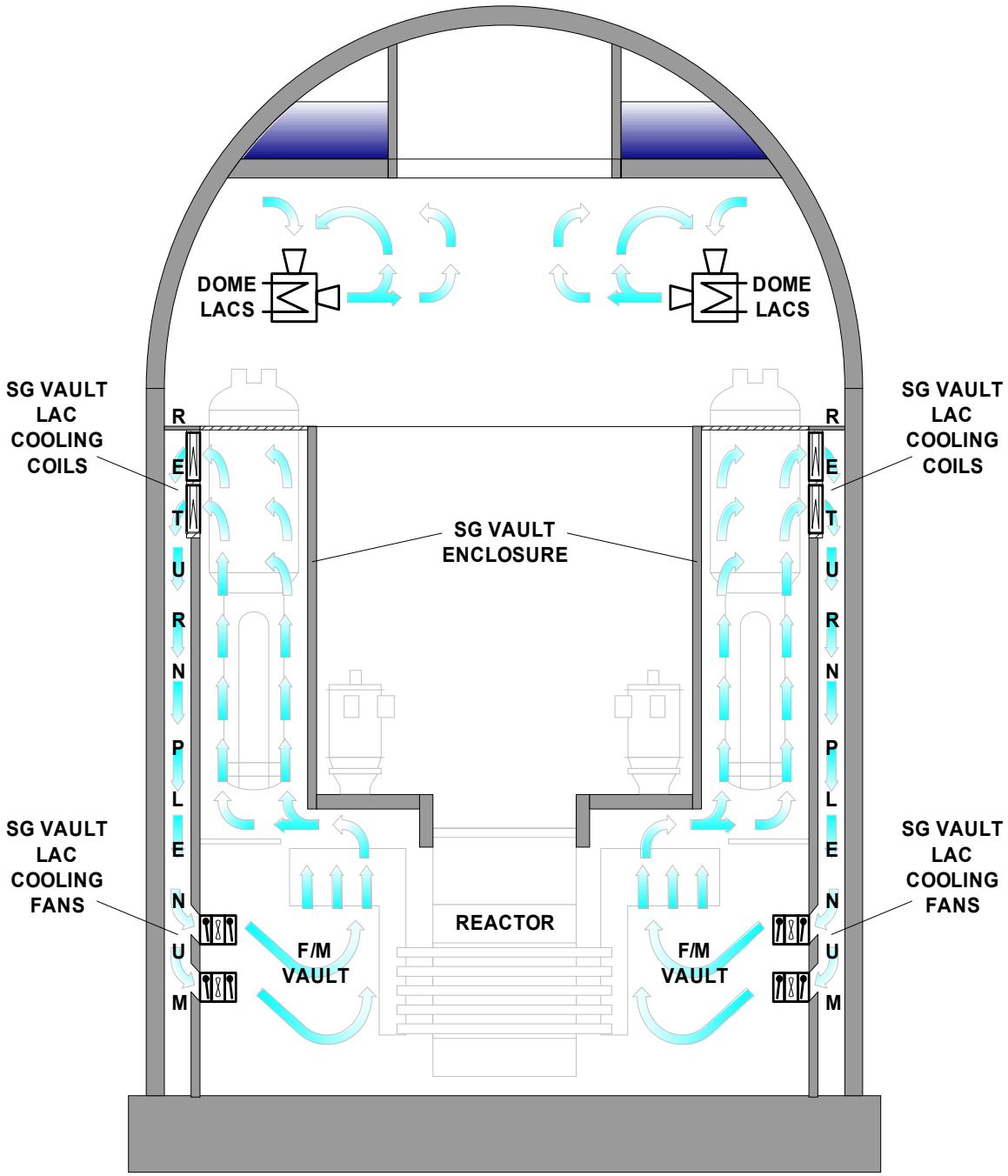

Figure 6.5-1 Containment Cooling System

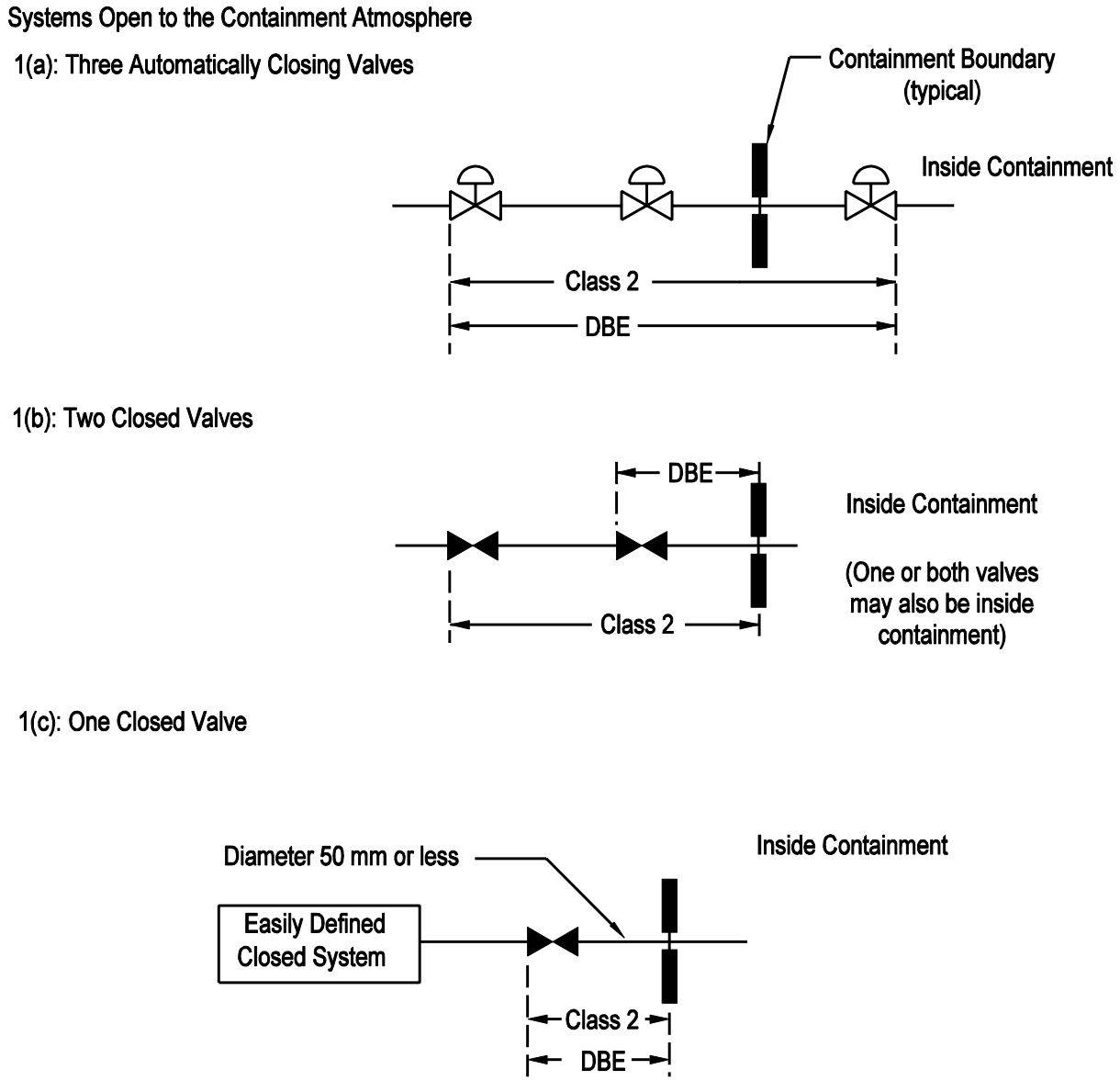

Figure 6.5-2 Systems Open to the Containment Atmosphere

1(d): No Isolation Valve

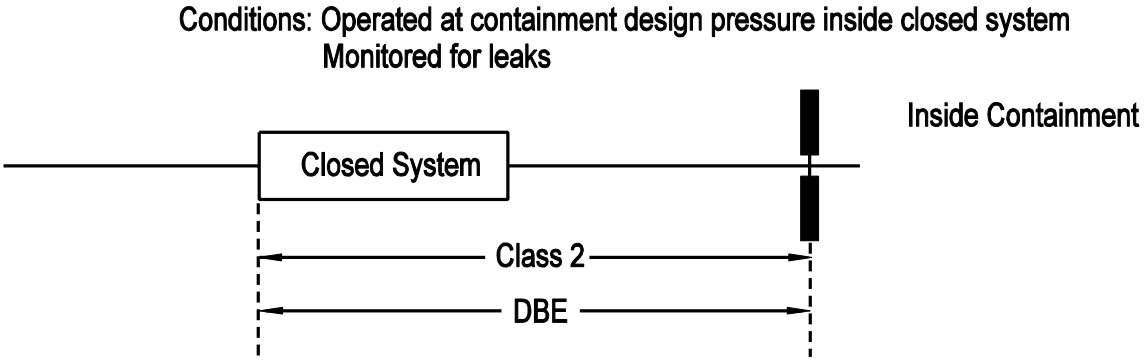

1(e): One Isolation Valve

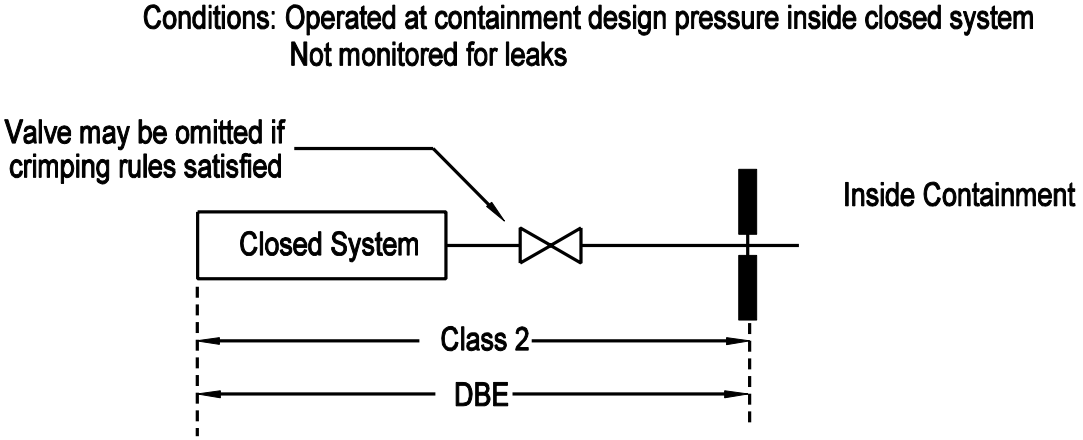

1(f): Instrument lines (tubing 19mm or smaller)

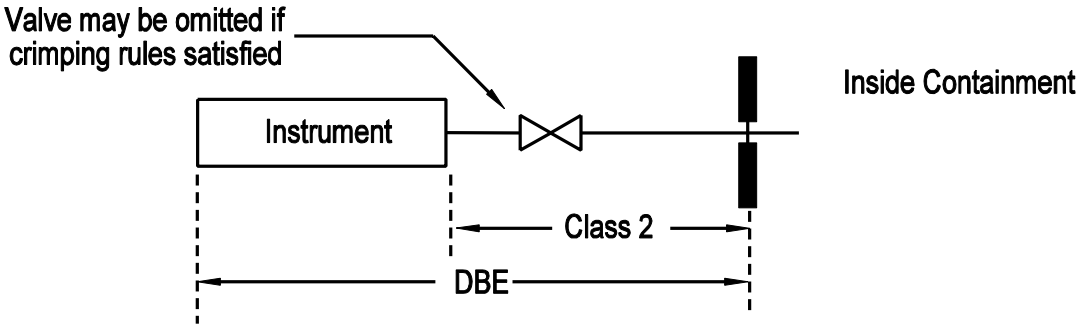

Figure 6.5-2 (continued)

Systems Connected to the Containment Atmosphere

2(a): No Isolation Valves

Conditions: Operated at containment design pressure inside closed system
Monitored for leaks

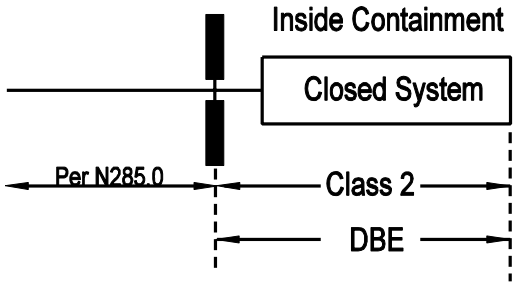

2(b): One Isolation Valve

Conditions: Operated at containment design pressure inside closed system
Not monitored for leaks

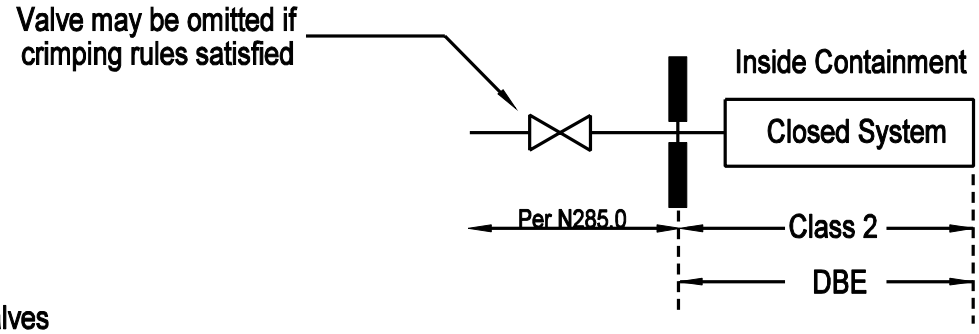

2(c): One Isolation Valves

Conditions: Closed system design pressure > 500 kPa(g)
Operated at or above containment design pressure
Monitored for leaks

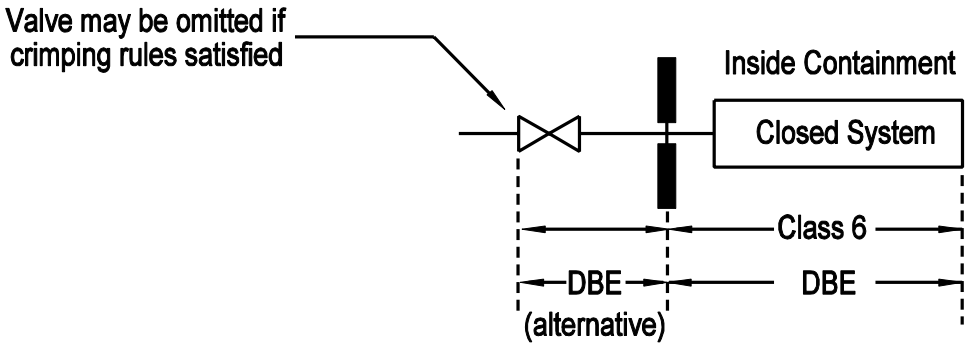

Figure 6.5-2 (continued)

Systems Connected to the Heat Transport System

3(a): Open Isolation Valves

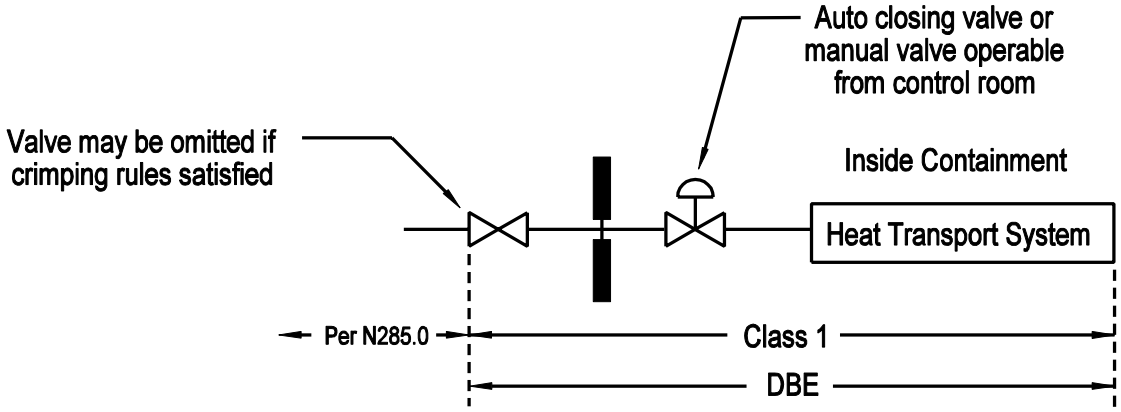

3(b): Open Isolation Valves

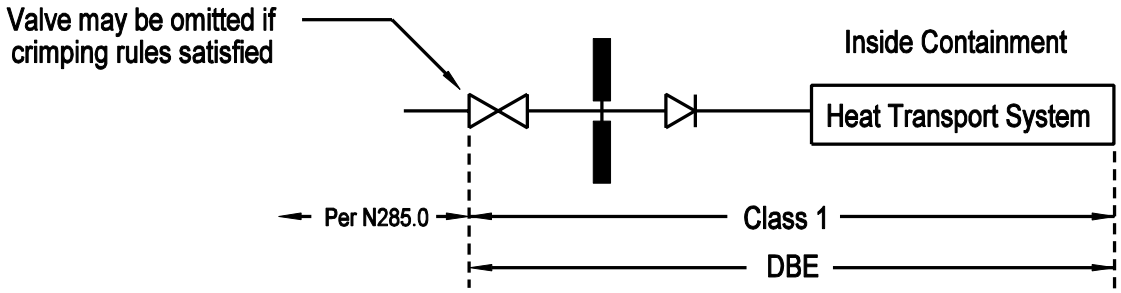

3(c): Closed Isolation Valves

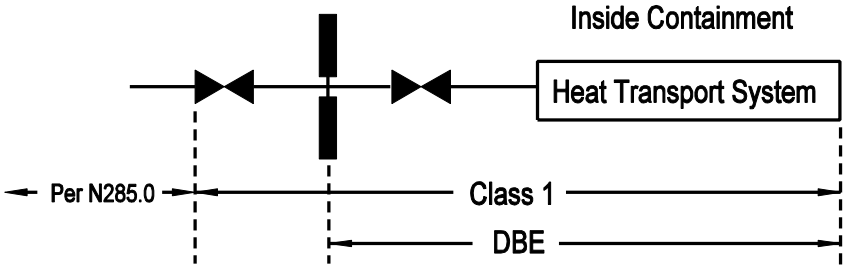

Figure 6.5-2 (continued)

3(d): Closed Isolation Valve

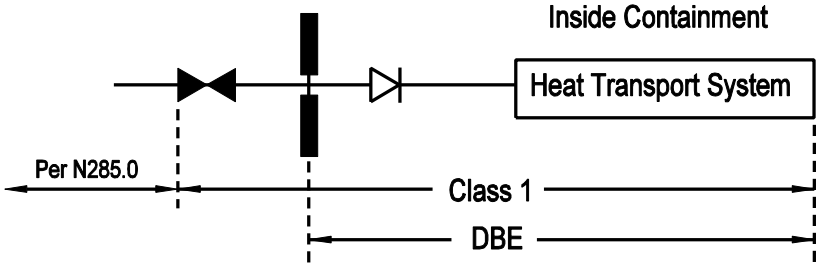

3(e): Small Lines (25 mm diameter or less)

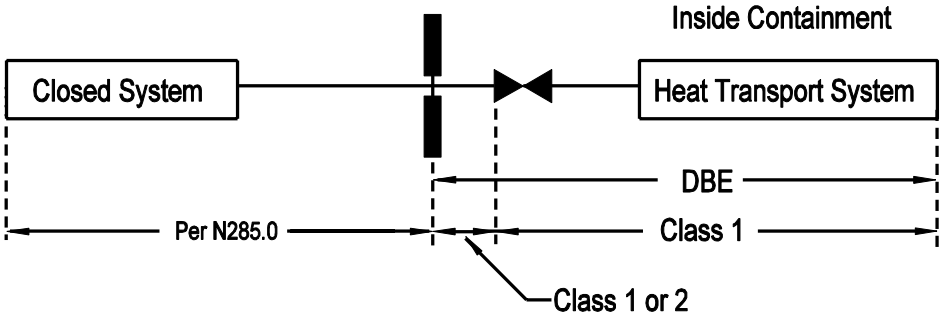

3(f): Instrument LIne (tubing 19 mm (3/4 inch) or smaller)

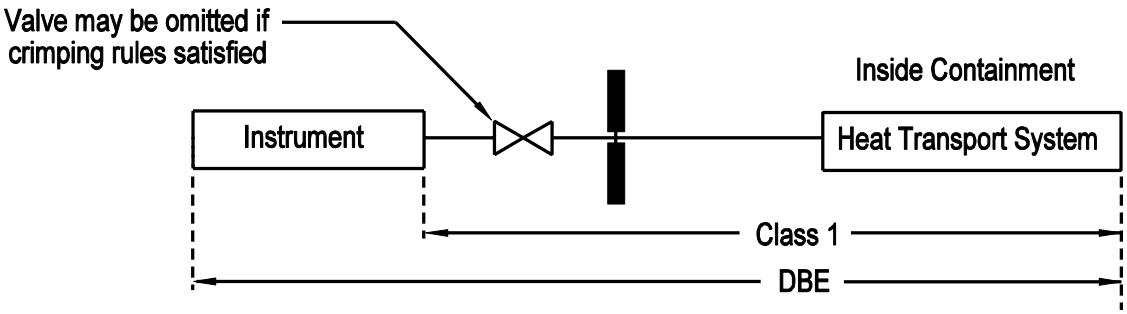

Figure 6.5-2 (continued)

6.6 Fission Product Removal and Control

The defence in depth approach to reactor safety extends to the control and removal of radioactive fission products. In this approach, several diverse barriers to the release of significant quantities of radioactive fission products that could affect station equipment, station personnel, the general population and the outside environment are presented. The first barrier is the uranium-dioxide fuel matrix where the vast majority of the radionuclides are created. The next set of barriers is the Zircaloy fuel sheaths that contain the Uranium-dioxide fuel, and the fuel channels, which are part of the heat transport system boundary. The entire reactor, which consists of the heat transport system and the requisite auxiliary and support systems, is contained within the reactor building containment envelope. The final barrier is the exclusion area boundary, a buffer of sorts between the reactor complex and the surrounding environment.

The release and transport of the radioactive fission products from the fuel through the various barriers, and finally to the outside environment is strongly dependent upon a number of factors. The key factors are the fuel temperature, the atmosphere surrounding the fuel (water, steam, hydrogen or air), and the available release paths. The fuel temperature, and consequently the temperature of the radionuclides, along with atmosphere, determines which of the wide variety of chemical species will be formed and will remain stable along the various regions of the release path. The fission products are divided into the following groups:

- Volatile species (noble gases and radioiodines) which are released when the fuel sheaths fail regardless of the atmosphere;
- Semi-volatiles (Ruthenium and Strontium) which are released under certain specific temperatures or atmospheric conditions (oxidizing or reducing conditions); and
- Non-volatiles (Zirconium and Neodymium), which remain in the fuel matrix under all of the likely fuel temperatures and atmospheres.

In addition to the volatility of the fission product species, the chemical and physical form of the radionuclides is important in determining the release and transport. The radionuclides that are airborne are mobile enough to leak through the barriers, including the heat transport system, the containment envelope, and the exclusion area boundary. However, there are also significant attenuations by the many natural and engineered safety design features such as decay, sorption, settling, filtering, and so on, that can provide some measure of control on the release of fission products.

A brief summary of radionuclide behaviour based on their physical and chemical form is as follows:

- The noble gases (e.g., Krypton and Xenon) do not show significant attenuation and are released with any air or steam discharged (including leakage) from the containment envelope.

- The water-soluble radionuclides (e.g., Cesium Iodide) easily transfer to the water phase and remain in the water. Their release depends on the release of the aqueous phase or the escape of liquid aerosols from containment.
- The suspended particulates (e.g., corrosion products) behave similarly to the water-soluble radionuclides.
- The organic iodides (e.g., Methyl Iodide) are produced in the containment water pool or in the liquid film on the containment surfaces. Volatile organic iodides partition to the air phase and their behaviour is similar to the noble gases, except that they are much more readily removed by containment filters.

The containment system is designed to limit the release of radioactivity into the environment to permissible levels (normal operations and accident conditions) in the event of a radioactivity release within the containment envelope. This is achieved by fast automatic closure of containment when the pressure inside the containment exceeds 3.5 kPa (g) or when radioactivity is detected in the ventilation exhaust.

The containment systems consist of several subsystems: the containment envelope, the energy suppression systems and the atmospheric control systems. The containment envelope includes the reactor building (constructed from pre-stressed concrete with a steel liner), the reactor building airlocks, and the containment isolation systems. The energy suppression systems consist of the reactor building air coolers. The atmospheric control systems include the passive autocatalytic recombiners.

The containment system automatically closes all penetrations open to the reactor building atmosphere when an increase in containment pressure or radioactive level is detected. Measurements of containment pressure and radioactivity are triplicated and the system is actuated using two-out-of-three logic.

Heat removal from the containment atmosphere after an accident is provided by local air coolers suitably distributed in various compartments inside the reactor building.

Hydrogen control is provided in the reactor building by passive autocatalytic recombiners to limit hydrogen concentration to below the deflagration limit within any significant enclosed compartment of the containment following any design basis accident, and to limit such concentration below the deflagration-to-detonation transition (DDT) for Limited Core Damage Accidents.

6.7 In-service Inspection and Testing

6.7.1 In-Service Inspection

The periodic inspection program identifies the pre-service inspection (also called inaugural inspection) and in-service inspection (also called periodic inspection) for pressure retaining components needed to shutdown the reactor, remove heat from the fuel, and contain radioactive materials after an accident.

The inspection program for pressure retaining components is based on a sample of the components subject to inspection, with inspection area selected on failure size and consequence, peak stress, fatigue usage factor, and the number of identical components.

6.7.1.1 Systems Subject to Inspection

"The systems subject to inspection shall include the following or portions thereof:

a) systems, and systems connected thereto, containing the fluid that, under normal conditions, directly transports heat from nuclear fuel, and other systems whose failure may result in a significant release of radioactive substances;

b) systems essential for the safe shutdown of the reactor or the safe cooling of the nuclear fuel, or both, in the event of a process system failure; and

c) systems, the failure or dislodgement of which may put in jeopardy the integrity of systems (a) or (b), or both. Included are large pieces of rotating machinery (e.g., flywheels)."

Based on the above, the following systems are subject to inspection:

- Heat Transport System
- Heat Transport Pressure and Inventory Control System
- Heat Transport Gland Seal Cooling Circuit
- Heat Transport Purification System
- Long Term Cooling System
- Heat Transport Sampling System
- Fuel Handling - Fuelling Machine Water Supply System
- Emergency Core Cooling System (Emergency Coolant Injection and Long Term Cooling)
- Shutdown System No. 1 (Shutoff Units)
- Shutdown System No. 2 (Liquid Gadolinium Injection)
- Steam and Feedwater System
- Equipment and piping supports and hangers in systems subject to inspection.

The inspection areas and the extent of inspection required will be determined by taking into consideration size of failure.

For shutdown system No. 1 (SDS1), the drive mechanism housings and thimbles form part of the moderator system pressure boundary and all internal components are exposed to the atmosphere of calandria; and operation of the system does not cause any pressure increase (and therefore stress) on the pressure boundary. It is therefore excluded from the periodic inspection.

The shutdown system No. 2 (SDS2) (Liquid Gadolinium Injection) is subjected to periodic testing.

The steam generator secondary shells are the only components of the steam and feedwater system which are subject to inspection.

Steam generator supports have been designed to withstand the mechanical loads generated by steam line or feedwater line failure. Also, feedwater or steam line rupture does not cause failure of the steam generator tubing. Therefore a rupture in the steam and feedwater system piping would not jeopardize the integrity of the heat transport system (HTS), and the system piping is, therefore, excluded from inspection.

6.7.1.2 Heat Transport System

The details for periodic inspection for HTS and periodic inspection program for pressure retaining components are given in a periodic inspection program for pressure retaining components.

6.7.1.3 Emergency Core Cooling System

The emergency core cooling (ECC) System for ACR-700 comprises two sub-systems: emergency coolant injection (ECI) system and long term cooling (LTC) system.

The ECC system shall be subjected to periodic inspection.

The design of the ECC system shall ensure that parts of the system subject to inspection are accessible, without exceeding the normal operational radiation dose criteria.

The details for periodic inspection for ECC system are provided in the periodic inspection program for pressure retaining components.

6.7.1.4 Containment Components

The containment boundary components including containment pressure suppression components and fluid boundaries of systems that penetrate the containment boundary (i.e., considered to be extension of containment boundary), and are greater than 1 NPS in diameter are subject to periodic inspection.

The in-service inspection program including the inaugural inspection, inspection methods, procedures, etc. should be documented in periodic inspection program, “Inspection of Containment Components”.

6.7.2 In-Service Testing

The pre-operational performance testing of nuclear reactor systems is carried out during commissioning, before reactor start-up to ensure that the system components function and operate to design requirements.

The in-service testing for system active components, including pumps and valves, is carried out for safety systems as required by the regulatory documents and for safety related systems as determined by the probabilistic safety assessment.

6.7.2.1 Pre-Service and In-Service Testing Requirements

The pre-service and in-service testing for mechanical active components, including pumps and valves in a nuclear reactor system is performed to assess their operational readiness. The pumps, valves and pressure relief devices for systems or portions of systems which are required to perform a specific function in shutting down a reactor to the cold shutdown condition, maintaining the cold shutdown condition, or mitigating the consequences of an accident are required to be tested periodically under the in-service testing program. The protective systems which are designed to perform safety functions to mitigate the consequences of an accident are required to be tested before plant criticality and periodically during the plant operation.

Shutdown Systems

The commissioning tests are required to demonstrate that design requirements for shutdown systems have been achieved. Those tests which are possible when the reactor is subcritical shall be done before first criticality, and with the reactor in an approved guaranteed shutdown state.

Complete operational tests to demonstrate the effectiveness of shutdown system shall be carried out at least once every two years. The shutdown system equipment shall be monitored or tested at a frequency which is adequate to meet the system unavailability target..

Emergency Core Cooling System

Before first criticality, tests of the emergency core cooling system (ECCS) equipment are required to verify that all design requirements have been achieved. Exceptions to these requirements are allowed, if it can be shown to the satisfaction of the regulatory authority that some operational characteristics are impractical to demonstrate under non-accident conditions, or that such tests have a detrimental effect on safety. The ECI equipment shall be monitored or tested at a frequency which is adequate to meet the system unavailability target.

Containment System Equipment, Penetrations and Isolating Devices

Before first criticality, the measurement of leakage rate of containment envelope is required to demonstrate that it is not greater than the test acceptance leakage rate. Measurements are made at a range of pressures up to and including the positive design pressure for each part of the containment envelope. Penetrations, isolating devices and airlocks are tested for those penetrations where baseline leakage measurements must be compared to future in-service leakage tests.

The testing of containment system equipment is performed before the plant goes into the in-service phase to verify that all design requirements have been achieved. Exceptions to this requirement are allowed if it can be shown to the satisfaction of regulatory authority that operational characteristics are impractical to demonstrate under non-accident conditions or that such tests would have a detrimental effect on safety.

During the normal plant operation, in-service leakage rate and pump pressure tests are to be carried out in accordance with one of the following alternative methods:

a) A leakage rate and proof pressure test shall be carried out at full design pressure at regular intervals to demonstrate that the measured leakage rate is not greater than the maximum allowable leakage rate, or

b) A leakage rate test shall be carried out at regular intervals to demonstrate that the leakage rate is not greater than the maximum allowable leakage rate. Such tests may be carried out at reduced or negative pressures. However, if the test results, when extrapolated to full design pressure, indicate leakage in excess of the test acceptance leakage rate, a leakage rate test at the full positive design pressure shall be carried out to demonstrate that the maximum allowable leakage rate is not exceeded.

In addition to the above routinely scheduled leakage rate tests, a leakage rate test at the full design pressure shall be performed in conjunction with any pressure proof test.

To the maximum extent practicable, tests to demonstrate that containment equipment meets its minimum allowable performance standards shall be carried out at regular intervals.

An in-service test program for penetrations, airlocks and isolating devices shall detail the nature of the test, test frequency, and leakage acceptance criteria.

The containment system equipment shall be monitored or tested at a frequency which is adequate to meet the system unavailability target.

6.7.2.2 In-Service Test Program

Based on the above requirements, ACR-700 in-service test program will be developed considering the following:

- The pump drivers are excluded, except where the pump and driver form an integral unit and the pump bearings are in the driver.

- The following valves are excluded. Valves such as vent, drain, instrument, test valves used for operating convenience; valves such as pressure regulating used for system control; and valves used for maintenance.
- The pumps and valves that operate in the course of plant operation at a frequency that satisfy the reliability requirements of the system do not need to be tested again.
- All manual valves are listed on an in-service test program. Under the program, a manual valve has its open/closed status verified by frequent visual field inspection. A number of such valves can be quickly inspected on routine plant walkabouts, at intervals between the system flow tests.
- The control circuits providing signals for power operated valves including the air actuated valves, are excluded.

6.7.2.3 Systems Subject to Testing

6.7.2.3.1 Heat Transport System and Auxiliaries

The heat transport (HT) pumps are continuously running during the plant operation and their performance is regularly monitored. Hence, no periodic testing is required for these pumps.

6.7.2.3.2 Emergency Core Cooling System

One of ECC system, the emergency coolant injection (ECI) system is normally poised and required to operate only in accident conditions.

The ability of the ECC system to meet the unavailability on demand target shall be demonstrated by periodic testing of essential components or by continual monitoring to confirm their correct operation. The following requirements will be applicable to the design of periodic testing facilities:

a) Provision will be made for periodic testing of essential active components, which are required for the response of the system to a LOCA.

b) The stroking time of all major valves (gas and water) will be recorded as part of their periodic tests.

c) The motorized injection valve testing will consist of verifying the valve operation, including logic associated with automated closure, and the trend recording of the valve travel and actuator motor current.

d) Component test frequency will be determined by its failure rate and its redundancy as given in the reliability report for the system.

e) The ECC system will not be made unavailable during testing. This may generally be accomplished by providing multiple or redundant components. Temporary reduction in redundancy during testing is acceptable if it cannot be avoided. Overrides will be provided,

wherever practical, to restore the system to its fully available condition, should a LOCA occur during testing.

f) The installed configuration of the ECC system will not be disturbed during testing. For example, the need for electrical jumpers or the disconnection of instrument impulse lines shall not be permitted.

Long Term Cooling (LTC) System

The LTC system is normally cold and isolated from the HTS during reactor operation. The LTC system must meet the unavailability on demand target. This shall be demonstrated by periodic testing of essential components or by continual monitoring to confirm their correct operation.

Commissioning Tests

Provision will be made for functional testing of the ECC equipment during commissioning (prior to the first criticality of the reactor), which will verify that design requirements of ECC components have been met.

Provision will be made to facilitate special tests to verify (a) system start-up and operation on demand, including the proper sequencing of the different phases of operation and the injection of water into the HT system, and (b) system integrity. The format of these special tests and the operating parameters shall be chosen so as not to cause thermal or structural damage to the HT system or the reactor core and interfacing systems.

Commissioning and testing experience on existing CANDU stations will be considered in the commissioning test program procedures for ACR-700.

6.7.2.3.3 Reserve Water System

The reserve water tank is located at a high elevation in the reactor building, provides an emergency source of water to the containment sumps for recovery by the long term cooling system in the event of a LOCA to ensure net positive suction head for the long term cooling pumps. In addition, the tank provides emergency makeup water by gravity to the steam generators (emergency feedwater), moderator system, shield cooling system and the heat transport system if required.

The reserve water system components will be tested in accordance with the test program procedures for ACR-700.

6.7.2.3.4 Liquid Injection Shutdown System

Testing of the liquid injection shutdown system shall comply with regulatory documents and standards. Hydrostatic testing shall comply with the standards. A commissioning test shall be done to demonstrate that all design requirements of each shutdown system have been achieved. Those tests, which are possible when the reactor is sub-critical, shall be done prior to first criticality, with the reactor in an approved guaranteed shutdown state.

6.7.2.3.5 Containment System Components

The containment isolation system valves ensure that there is no escape of activity from process systems crossing containment after an accident. The containment isolation valves close automatically after an accident, with a closure time within the limits determined by safety analysis.

A periodic testing program covers containment isolation valves during their plant operation. In terms of monitoring the leakage performance, two tests are relevant.

a) Leakage testing; this test is performed by applying pressure in the intervening piping section between a pair of containment isolation valves and then monitoring the pressure decay with time. The test can be done on power because the testing applies generally to gaseous process lines, whose interruption, for short time intervals, will not significantly affect the plant operation.

   For the valves on lines continuously carrying water under pressure, the test is not required as the system pressure is significantly higher than the reactor building accident pressure.

b) Containment isolation valves are also checked for control to fully closed position, in response to a command by the operator on each valve handswitch from the main control room panel.

The containment isolation lines with associated containment isolation valves are subject to periodic inspection.

6.7.2.3.6 In-Service Testing of Pressure Relief Devices

The periodic performance testing and monitoring of pressure relief devices for overpressure protection are carried out in accordance with the following requirements. All Class 1 pressure relief valves are tested within the five year period. All Class 2 and Class 3 valves are tested within a ten year period. The set pressure for the valves during the test shall not exceed the stamped set pressure criteria by 3% or greater.

TABLE OF CONTENTS

SECTION **PAGE**

7. INSTRUMENTATION AND CONTROL 7-1

7.1 Introduction 7-1
7.1.1 Identification of Safety Related Instrumentation and Control 7-1
7.1.1.1 Safety Systems 7-1
7.1.1.2 Safety Support Systems 7-2
7.1.1.3 Safety Related Process Systems 7-2
7.1.1.4 Status Displays and Annunciation 7-2
7.1.1.5 Systems Required for a Safe Shutdown 7-3
7.1.2 Identification of Safety Design Requirements 7-3
7.2 Safety Systems 7-4
7.2.1 Shutdown System No. 1 (SDS1) 7-4
7.2.1.1 Design Requirements 7-4
7.2.1.2 System Description 7-4
7.2.2 Shutdown System No. 2 (SDS2) 7-13
7.2.2.1 Design Requirements 7-13
7.2.2.2 System Description 7-13
7.2.3 Emergency Core Cooling System 7-21
7.2.3.1 Emergency Coolant Injection System 7-21
7.2.3.2 Long Term Cooling System 7-23
7.2.3.2.2 Design Requirements 7-23
7.2.4 Containment System Instrumentation and Controls 7-24
7.2.4.1 Introduction 7-24
7.2.4.2 Design Requirements 7-24
7.2.4.3 System Description 7-27
7.3 Requirements for Safe Shutdown 7-32
7.3.1 Systems Required for Safe Shutdown 7-32
7.3.2 Means for Reducing Reactor Power 7-33
7.3.2.1 Reactivity Controls 7-33
7.3.2.2 Shutdown System No. 1 (SDS1) 7-34
7.3.2.3 Shutdown System No. 2 (SDS2) 7-34
7.3.2.4 Moderator System Drainage 7-35
7.3.3 Guaranteed Shutdown State 7-35
7.3.4 Cooldown and Heat Removal after a Reactor Power Reduction 7-35
7.4 Other Safety Related Systems 7-37
7.4.1 Reserve Water System 7-37
7.4.1.1 Introduction 7-37
7.4.2 Main Steam Isolation Valves (MSIVs) 7-37
7.4.3 Safety Related Interlocks 7-38
7.4.3.1 Identification 7-38
7.4.3.2 Requirements 7-38
7.4.3.3 Moderator Purification Inhibit 7-38

TABLE OF CONTENTS

SECTION		PAGE
7.4.4	Steam Generator Second Crash Cooldown System	7-39
7.4.5	Shield Cooling System	7-39
7.5	Control Systems Not Required for Safety	7-40
7.5.1	Reactor Regulating System (RRS)	7-40
7.5.1.1	Introduction	7-40
7.5.1.2	Design Requirements	7-40
7.5.1.3	System Description	7-41
7.5.2	Overall Plant Control System	7-47
7.5.2.1	Introduction	7-47
7.5.2.2	Characteristics of Plant Loads	7-48
7.5.2.3	Major Control Functions	7-48
7.5.2.4	Overall Plant Control Operation	7-49
7.5.3	Turbine Generator Control	7-53
7.5.4	Steam Generator Pressure and Level Control	7-53
7.5.4.1	Steam Generator Pressure Control Program (SGPC)	7-53
7.5.4.2	Steam Generator Level Control Program (SGLC)	7-54
7.5.5	HTS Pressure and Inventory Control	7-54
7.5.6	Core Monitoring Instrumentation	7-55
7.5.6.1	Channel Flow Verification (CFV)	7-55
7.5.6.2	Channel Temperature Monitoring System	7-55
7.5.6.3	Fuelling Machine Differential Pressure Measurement System	7-56
7.5.6.4	Failed Fuel Detection and Location Systems	7-56
7.5.6.5	Annulus Gas System	7-57
7.5.7	Process Instrumentation - General	7-57
7.6	Control Areas and Control Computers	7-60
7.6.1	Main Control Area	7-60
7.6.1.1	Main Control Room	7-60
7.6.1.2	The Human-System Interfaces (HSIs)	7-62
7.6.1.3	Graphic Displays	7-62
7.6.1.4	Alarm Annunciation	7-62
7.6.2	Secondary Control Area	7-63
7.6.3	Control Computers	7-63
7.6.3.1	Plant Process Instrumentation and Control	7-63
7.6.4	Safety Related Display Information	7-69
7.6.4.1	General	7-69
7.6.4.2	Safety System Monitor Computer System (SSM)	7-70
7.6.4.3	Post Accident Management	7-71

7. INSTRUMENTATION AND CONTROL

7.1 Introduction

This chapter describes the instrumentation and control (including alarms, displays and annunciation) for safety related and non-safety related systems.

7.1.1 Identification of Safety Related Instrumentation and Control

Safety related systems and structures are those which, by virtue of failure to perform safety functions in accordance with the design intent, could cause regulatory dose limits for the plant to be exceeded in the absence of mitigating system action. They also include safety related alarms, displays, annunciation and interlocks.

The instrumentation and controls determined to be safety-related are identified below.

7.1.1.1 Safety Systems

The four Safety Systems perform safety functions to mitigate events caused by failure of normally operating functions (serious process failures).

The four Safety Systems comprise two reactor trip systems (SDS1, SDS2) and two systems that actuate engineered protection (ECC, Containment). The general requirements and process aspects for the four Safety Systems are described in Chapter 6.

The functions of the four Safety Systems are primarily safety related, and all instrumentation and controls required for the actuation, control, testing, and status monitoring of these systems (and the included subsystems specified below) are considered safety-related.

The four Safety Systems are listed below, along with related systems that are part of one of the Safety Systems:

a) Shutdown System No. 1 (SDS1)
   - Includes shutoff units

b) Shutdown System No. 2 (SDS2)
   - Includes liquid injection shutdown system

c) Emergency core cooling (ECC)
   - Includes emergency coolant injection system
   - Includes long term cooling system

d) Containment System

   Includes:
   - Reactor building

- Containment penetrations and appurtenances
- Airlocks
- Containment isolation

7.1.1.2 Safety Support Systems

The Safety Support Systems, listed below, are those that provide services required for the proper functioning of the Safety Systems:

a) Reserve water system (RWS)

b) Electric power system

c) Service water systems, including:
   - Raw service water
   - Recirculated cooling water

d) Instrument air
   - Includes qualified backup instrument air.

Instrumentation, controls and displays required for the operation, testing, and status monitoring of these systems are considered safety related.

7.1.1.3 Safety Related Process Systems

In an ACR reactor, the process systems are the nuclear and conventional systems required for operation of the plant in any defined operating state expected during the life of the plant.

7.1.1.4 Status Displays and Annunciation

These are systems and displays which provide information needed by the operator for operation of the plant during normal operations, anticipated plant upsets, and during and after an accident. This includes information required for manual initiation or control of safety related systems, to indicate the status of safety related systems and that safety functions are being accomplished, or to determine actions to be taken to mitigate the consequences of accidents or plant upsets. Displays and annunciation are provided via the following functions:

a) Video display unit (VDU) for the plant display system (PDS) and safety systems monitor and test system (SSMT), panel displays and annunciation (via PDS and windows, see Section 7.6.1.4) in the main control room (including the four safety systems).

b) Alarm annunciation, displays of plant variables, and other information available through the PDS computers.

c) Panel displays and SSMT displays in the secondary control areas (SCA).

d) Information for post-accident management (overlaps with a) and c) above).

7.1.1.5 Systems Required for a Safe Shutdown

Systems and requirements for a safe shutdown condition are described in Section 7.3.1.

7.1.2 Identification of Safety Design Requirements

The requirements and criteria applicable to the safety related instrumentation and controls vary from system to system, depending on the safety function to be performed and the circumstances under which the function is to be performed. Requirements associated with the safety systems are described in Section 6.1.1. Requirements for other safety related systems are provided within this chapter.

7.2 Safety Systems

7.2.1 Shutdown System No. 1 (SDS1)

7.2.1.1 Design Requirements

7.2.1.1.1 General

General requirements applicable to SDS1, including the general approach for the safety systems, physical separation, redundancy, independence from shutdown system No. 2 (SDS2), and other general requirements, are outlined in Section 6.1.

The functional capability and functional assurance requirements specific to SDS1 are summarized in Section 6.2 and expanded on in the sections below.

7.2.1.2 System Description

SDS1 consists of 24 vertically-oriented, gravity-drop shut off rods actuated on the basis of two-out-of-three actuation logic.

This section describes the initiating trip parameters and other control-related aspects of SDS1. The requirements, design, and performance of the SDS1 shutoff units are described in Section 4.1.1.5.

Figure 7.2.1-1 shows the overall block diagram for the SDS1 trip logic.

7.2.1.2.1 SDS1 Trip Parameters

Summary

There are a total of eleven trip parameters based on nine measured neutronic and process variables, plus manual trips in both the main control room (MCR) and the secondary control area (SCA) and a trip computer (TC) watchdog timer trip that can initiate a trip on SDS1. These are listed in Table 7.2.1-1.

During startup after a prolonged reactor shutdown, special startup instrumentation may be used to provide a trip on high-count rate until the fission chambers demonstrate an on-scale rational power signal. This additional temporary trip is also listed in Table 7.2.1-1.

The SDS1 trip parameters are described below.

High Neutron Power (Regional Overpower)

The high neutron power trip is designed to provide protection for the following events:

a) Loss-of-regulation (including localized power peaking).

b) Large loss of coolant accident (LOCA).

The SDS1 neutron overpower trip is provided by prompt response self-powered SIR (straight, individually replaceable) in-core flux detectors located in wells in horizontal assemblies distributed among the three channels. The SDS1 detectors are thus separated from any regulating system and from the SDS2 detectors by the different spatial orientation of the assemblies. The detectors are similar in design and construction to the SDS2 flux detectors.

The flux detectors produce a signal that is proportional to the local flux. A linear amplifier converts the detector output current to a voltage. Signals from selected detectors in each trip channel are averaged to provide a measurement of reactor power for conditioning setpoints that vary with power for other SDS1 trip parameters. The power measurements provided by these in-core flux detectors are channelized; that is, a separate power measurement is made for each trip channel, and used only for trips in that channel.

High Rate of Logarithmic Neutron Power (Log Rate)

The high rate of logarithmic neutron power (Log Rate) trip is designed to provide protection for a loss-of-regulation from low power event (with the heat transport system pressurized or depressurized).

The rate of logarithmic neutron power is measured by three fission chambers, one for each instrumentation channel. The output current from each fission chamber goes to an amplifier, which produces logarithmic neutron power ("Log-N"), linear neutron power ("Lin-N") and log-rate signals. The log-rate signal is used as a trip parameter. The Log-N power signal is used as a conditioning parameter for several other trip parameters.

Heat Transport System Low Pressure

The heat transport system (HTS) low pressure trip is designed to provide protection for the following events:

a) Small loss of coolant accident (LOCA).

b) Loss of pressure and inventory control (LOPIC).

Heat transport system pressure is measured at three widely separated locations (one for each channel) on each of the two reactor outlet headers for a total of six pressure signals. These transmitters are used to provide signals for both high pressure and low pressure trips.

The setpoint for the HTS low pressure trip is a function of reactor power. This provides adequate protection at all reactor power levels. The HTS low pressure trip is automatically conditioned out at low power to allow for heat transport system maintenance and provides protection for loss of regulation events from very low power levels while the heat transport system is depressurized.

Heat Transport System High Pressure

The HTS high pressure trip is designed to give protection against the following:

a) Total or partial loss of Class IV power (loss of flow), pump trip and pump seizure.

b) Loss-of-regulation.

c) Secondary side failures.

The pressure transmitters used for this trip are shared with the HTS low pressure trip. These same pressure measurements are also used for actuation of the heat transport system relief valves.

Heat Transport System Low Flow

The HTS low flow trip is to provide protection for events that result in a loss of HTS forced circulation. Heat transport system flow is measured in a total of six representative inlet feeders, three in each flow direction through the reactor. The logic is arranged such that each channel is made up of one measurement from each flow direction.

The HTS low flow trip is automatically conditioned out at low power. This means that the low flow trip becomes an overpower trip when the main coolant pumps are stopped.

Pressurizer Low Level (PLL)

The pressurizer low level trip provides protection for the following events:

a) Loss of coolant accident (LOCA) including very small loss of coolant accidents where the loss of inventory rate is just beyond the ability of the feed system to compensate.

b) Loss of pressure and inventory control (LOPIC).

The pressurizer level is measured by 3 differential pressure transmitters. The trip setpoint is a function of power as the pressurizer level can vary considerably due to swell in the heat transport system as power increases. This trip is automatically conditioned out at low power to allow for maintenance on the heat transport system.

Moderator Low Level

The moderator low level (MLL) trip is designed to provide protection against moderator pipe equipment or other related failures resulting in a decrease of moderator level or cooling capability. Triplicated level measurement loops are used for measuring the level in the moderator head tank by three differential pressure transmitters. This trip is automatically conditioned out at low power.

Moderator High Level

The moderator high level (MHL) trip is designed to provide protection against an in-core LOCA or loss of moderator cooling. This trip uses of the same triplicated level measurements as those used for the moderator low level trip.

Reactor Building High Pressure

The reactor building (RB) high pressure trip provides protection against small and large LOCAs, or loss of secondary coolant inside containment. The reactor building pressure is measured with three differential pressure transmitters, one for each trip channel. A rise in the reactor building pressure will result in a sequence of safety system actions by the containment system as described in Section 7.2.4. The reactor will be tripped on SDS1 when the RB pressure exceeds the trip setpoint.

Steam Generator Low Level

The steam generator low level trip provides protection against secondary side failures. Triplicated level measurements are on each steam generator. The setpoint for this trip is a function of reactor power as the normal operating level varies substantially with power due to shrinkage and swell effects. In addition, this trip is automatically conditioned out at low power to allow for maintenance and to prevent spurious trips following a loss of Class IV power.

Manual Trip

SDS1 can be tripped manually from both the main control room (MCR) and secondary control area (SCA).

Manual trip is initiated by pressing channelized (D, E, F) pushbuttons on the SDS1 control panel. These pushbuttons are mechanically linked, permitting all three channels to be tripped simultaneously by a single push. A similar arrangement is found in the SCA.

The manual trip is provided to allow the operator to trip the reactor in the event of any accident for which operator action is required. The manual trip is credited only if an event is apparent to the operator from MCR indications and there is adequate decision and action time.

Trip Computer Watchdog

There is a watchdog on the trip computer (TC) within each channel. A reactor trip occurs if the watchdog associated with each TC does not receive timely pulses from the TC to confirm that the TC is operating correctly.

7.2.1.2.2 Trip Logic Processing

General

Figure 7.2.1-2 shows SDS1 trip logic. The three trip channels (D, E and F) each have independent and physically separated power supplies, trip parameter sensors, instrumentation, trip logic, conditioning, and annunciation. Some trip parameter sensors are shared with the reactor regulating system, however, inter-channel independence and separation are maintained. When any two of the three channels trip, the shutoff rods are dropped.

General coincidence logic is used, that is, an entire channel trips when any measurement of any parameter within that channel reaches its trip setting.

The trip logic in each channel is implemented using trip computers (TRCs). These are industrial grade, field-proven computers that implement all trip parameter, conditioning, and setpoints that are functions of reactor power. The digital outputs of the TCs drive relays in the channel trip logic. The only trip parameters that are implemented external to the computers are the manual trip, TC watchdog trip, and the temporary start-up instrumentation trip.

Trip "Seal-In" and Reset

If a trip condition exists for longer than the "seal-in" delay, the trip state in the logic becomes "sealed-in" (i.e. held in the tripped state). The tripped channel, once sealed-in, can only be reset by the operator after all trip parameters in that channel have cleared.

Interlocks

Interlocks are provided as follows for interface with other systems:

a) Tripped condition of SDS1 or SDS2 inhibits withdrawal of the shutoff rods.

b) SDS1 unpoised (i.e. fewer than 22 of 24 shutoff rods fully withdrawn) inhibits moderator poison removal and control absorber withdrawal.

Shutoff Rod Withdrawal

The withdrawal of shutoff rods is controlled by the reactor regulating system (RRS). The shutoff rods are grouped into two banks, and each bank is normally withdrawn separately. The shutoff rod withdrawal is halted if neutron power log rate is high or the effective power error is positive. The operator must reset the shutoff rod withdrawal control program to continue the withdrawal process.

The dropping of the shutoff rods by release of the direct-current clutches is the function of SDS1. The motor and drive circuits for shutoff rod withdrawal are electrically independent of the clutch circuits, ensuring effective separation of the control and protective functions.

7.2.1.2.3 Testing

For SDS1, parameter testing checks the operation of an individual channel. The trip logic reacts to simulated parameter measurements in the same manner as actual trip conditions.

To guard against accidental tripping of two channels and the resulting reactor shutdown, the test logic provides inhibitors to ensure testing of only one channel at a time. Interlocks ensure that test signals can only be connected to one SDS1 channel at a time.

Parameter and loop selection for testing is done via the safety system monitor computer system (SSM) which supports the testing process. The result of the selection is to put the loop into a condition where a test signal can be injected to exercise it to the tripped condition. Testing functions are executed by the SSM and test computers under control of the operator.

7.2.1.2.4 Maintenance

SDS1 incorporates appropriate redundancy and provisions for maintenance, so that requirements for system availability will be met.

The design of SDS1 allows maintenance to be done on any part of the system without jeopardizing its availability target. If maintenance is to be done on any measurement loop or logic component, that channel is placed in a tripped condition. In this state, an SDS1 system trip will occur on a trip of any one of the remaining two channels, ensuring system availability. SDS1 components that may require maintenance during reactor operations are located in accessible areas. Most of the process trips are conditioned out at low power. This allows process maintenance to be performed without tripping the reactor.

The shutoff units are designed to facilitate maintenance and trouble-shooting. The basic clutch control and logic units for all shutoff units are identical and can be quickly replaced or interchanged. As well, the reactor can be operated with two shutoff units non-functional or being maintained.

Table 7.2.1-1 Shutdown System Number One Trip Parameters

Trip Parameter	Detector Type	Conditioning Parameters
High Neutron Power	Vertical In-core Detectors	-
High Rate Log Neutron Power	Fission Chambers	-
Heat Transport System Low Pressure	Pressure Transmitters	Conditioned out at low power. Setpoint is function of reactor power
Heat Transport System High Pressure	Pressure Transmitters	-
Heat Transport System Flow	Flow Transmitters	Conditioned out at low power.
Pressurizer Low Level	Level Transmitters	Conditioned out at low power. Setpoint is function of reactor power
Moderator Low Level	Level Transmitters	Conditioned out at low power.
Moderator High Level	Level Transmitters	-
High Reactor Building Pressure	Pressure Transmitters	-
Steam Generator Low Level	Level Transmitters	Conditioned out at low power. Setpoint is function of reactor power
Manual	-	-
TRC Watchdog Timer	-	-
Start-up Count Rate (1)	Fission Chamber	-

1. For initial startup or startup after prolonged shutdown only.

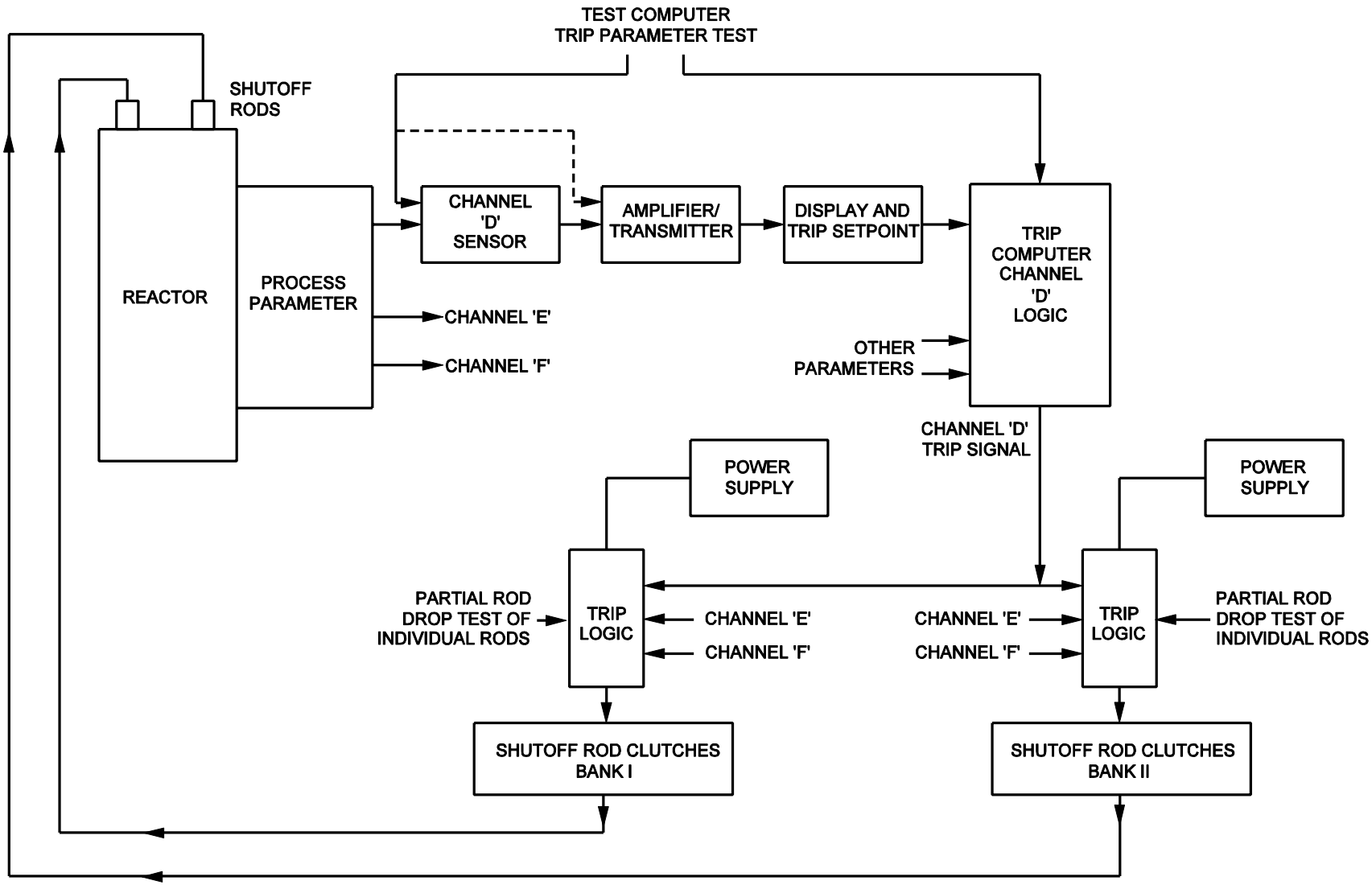

Figure 7.2.1-1 Shutdown System No. 1 – Block Diagram

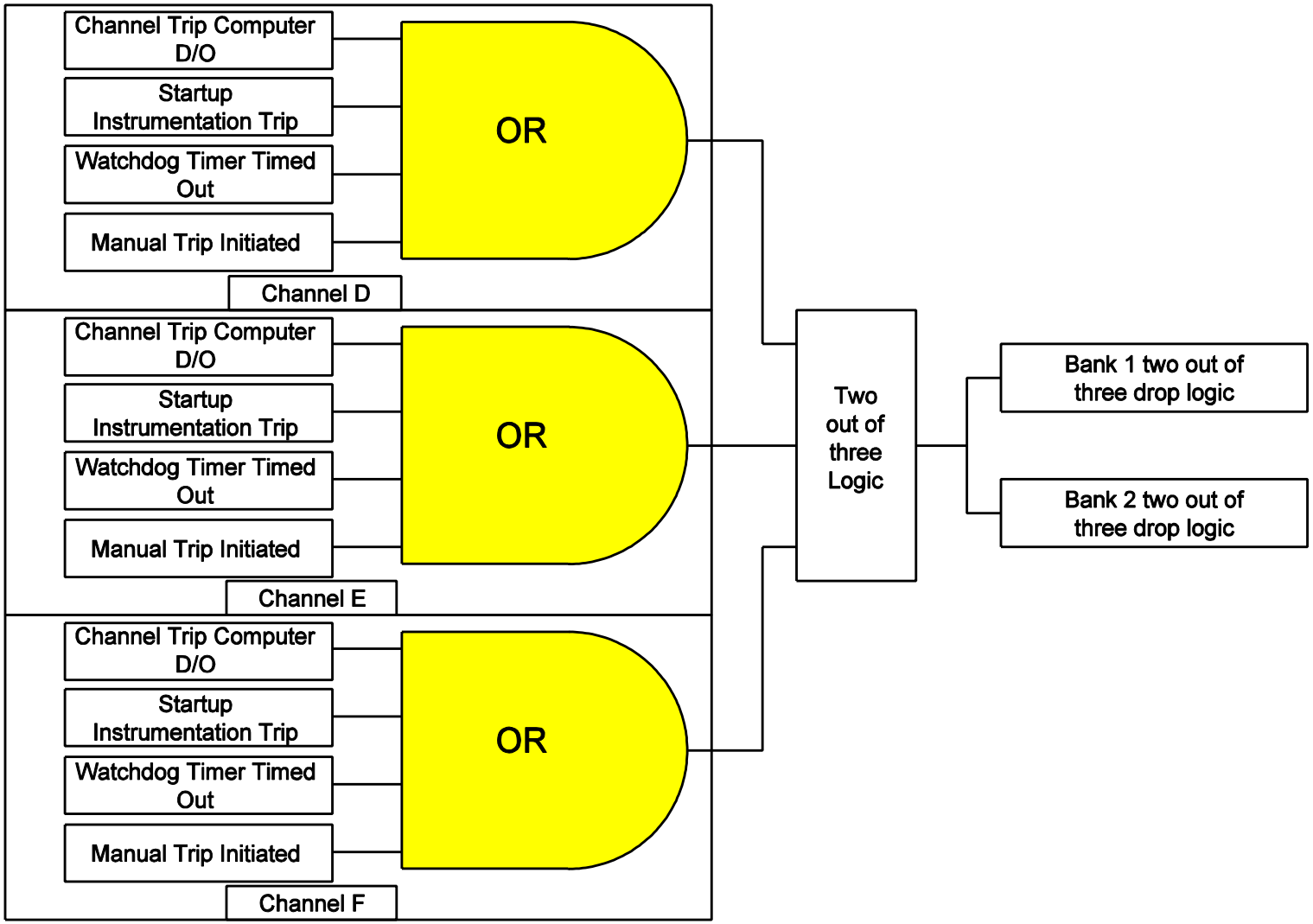

Figure 7.2.1-2 Shutdown System No. 1 – Trip Logic

7.2.2 Shutdown System No. 2 (SDS2)

7.2.2.1 Design Requirements

7.2.2.1.1 General

General requirements applicable to SDS2, including the general approach for the four safety systems, redundancy, independence from shutdown system No. 1 (SDS1), and other general requirements, are outlined in Sections 6.1.

The functional capability requirements and functional assurance requirements specific to SDS2 are summarized in Section 6.3 and the sections below.

7.2.2.2 System Description

7.2.2.2.1 General

SDS2 causes reactor shutdown by the rapid injection of concentrated gadolinium nitrate solution into the bulk moderator through six horizontally distributed nozzles. SDS2 employs an independent triplicated logic system, which senses the requirement for this emergency shutdown and opens fast-acting helium pressure valves to inject the gadolinium poison into the moderator.

This section describes the initiating trip parameters and other instrumentation-related aspects of SDS2. The system and component descriptions of the SDS2 liquid injection shutdown system (LISS) are described in Section 6.5. Note that all components of SDS2 within or adjacent to the core are horizontally oriented to ensure spatial separation from SDS1 in-core components, which are vertically oriented.

Figure 7.2.2-1 shows the overall block diagram for the SDS2 trip logic.

7.2.2.2.2 SDS2 Trip Parameters

Summary

There are ten trip parameters based on eight measured neutronic and process variables, plus manual trips in both the main control room (MCR) and the secondary control area (SCA) and a trip computer (TC) watchdog timer trip that can initiate an SDS2 reactor trip. These are listed in Table 7.2.2-1 and are described below.

High Neutron Power (Regional Overpower)

The neutron overpower trip is designed to give protection against the following events:

a) Loss-of-regulation (including localized power peaking).

b) Large LOCA.

The SDS2 neutron overpower trip is provided by prompt response self-powered SIR (straight, individually replaceable) in-core flux detectors located in wells in horizontal assemblies distributed among the three channels. The SDS2 detectors are thus separated from any regulating system and from the SDS1 detectors by the different spatial orientation of the assemblies. The detectors are similar in design and construction to the SDS1 flux detectors. The high neutron power trip is also known as the regional overpower protection trip (ROPT).

The flux detectors produce a signal that is proportional to the local flux. The output current of the detector goes to a linear amplifier that converts the detector output current to a voltage. The amplifiers are different from those used on SDS1.

Signals from selected SDS2 flux detectors are averaged to provide a measurement of reactor power for setpoint variation for other SDS2 trip parameters. The detectors are selected to give channelized power indications that are relatively insensitive to flux-shape changes occurring during normal operations.

High Rate of Logarithmic Neutron Power (Log Rate)

The high log rate trip is designed to provide protection for a loss-of-regulation from low power event (with the heat transport system pressurized or depressurized),

Three uncompensated ion chambers, located in separate housings on the accessible side of the calandria, are provided for SDS2. Each housing also contains a test shutter. Lead shielding is provided on the inner end of the ion chamber tubes extended through the side wall of the reactor vault, where they are sealed by a bellows. Cooling is provided by the calandria vault cooling water.

The output current from each ion chamber goes to an amplifier, which produces log neutron power, linear neutron power, and log rate signals. The log rate signal is a direct trip parameter. The Log-N signal is used for conditioning or setpoint variation for other trip parameters.

Heat Transport System Low Pressure

This trip is designed to give protection against the following:

a) Small loss of coolant accident (LOCA).

b) Loss of pressure and inventory control (LOPIC).

The setpoint for the low pressure trip is a function of reactor power in order to provide adequate protection for small loss-of-coolant accidents at all reactor power levels. The Log-N ion chamber signal conditions the low pressure trip out at low power. This allows for maintenance of the heat transport system and provides loss of reactivity protection from decay power levels while the heat transport system is depressurized.

Heat transport system pressure is measured at three widely separated locations on each of the two outlet headers (total of six measurements). These transmitters are used to provide signals for both high and low pressure trips.

Heat Transport System High Pressure

The HTS high pressure trip is designed to give protection against the following:

a) Total or partial loss of Class IV power (loss of flow), pump trip and pump seizure.

b) Loss-of-regulation.

c) Secondary side failures.

The pressure transmitters used for this trip are shared with the HTS low pressure trip.

Heat Transport System Low Flow

The HTS low flow signal trip is to provide protection for events that result in a loss of HTS forced circulation. Heat transport system flow is measured in a total of six feeders, three in each direction through the reactor. The logic is arranged such that each channel is made up of one measurement from each of the two flow directions.

The low flow trip is automatically conditioned out at low. This means that the low flow trip becomes an overpower trip when the main coolant pumps are stopped.

Pressurizer Low Level (PLL)

The pressurizer low level trip provides protection for the following events:

c) Loss of coolant accident (LOCA) including very small loss of coolant accidents where the loss of inventory rate is just beyond the ability of the feed system to compensate.

d) Loss of pressure and inventory control (LOPIC).

The pressurizer level is measured by 3 differential pressure transmitters. The trip setpoint is a function of power as the pressurizer level can vary considerably due to swell in the heat transport system as power increases. This trip is automatically conditioned out at low power to allow for maintenance on the heat transport system.

Moderator Low Level

The moderator low level (MLL) trip is designed to provide protection against moderator pipe, equipment or other related failures resulting in a decrease of moderator level or cooling capability. Triplicated level measurement loops are used for measuring the level in the moderator head tank by three differential pressure transmitters. This trip is automatically conditioned out at low power.

Moderator High Level

The moderator high level (MHL) trip is designed to provide protection against an in-core LOCA or loss of moderator cooling. This trip uses of the same triplicated level measurements as those used for the moderator low level trip.

Reactor Building High Pressure

This trip is designed to give protection against the following events:

a) Small and large loss of primary coolant.

b) Loss of secondary coolant inside containment.

The reactor building pressure is measured with three differential pressure transmitters, one for each trip channel. A rise in the reactor building pressure will result in a sequence of safety system actions by the containment system as described in Section 7.2.4. The reactor will be tripped on SDS2 when the RB pressure exceeds the trip setpoint.

Steam Generator Low Level

The steam generator low level trip provides protection against secondary side failures. Triplicated level measurements (G, H, and J) are provided on each of the two steam generators. The setpoint for this trip is a function of reactor power as the normal operating level varies substantially with power due to shrinkage and swell effects. In addition, this trip is automatically conditioned out at low power to allow for maintenance and to prevent spurious trips following a loss of Class IV power.

Manual Trip

SDS2 can be actuated by manual trips in both the main control room (MCR) and secondary control area (SCA).

A manual trip is initiated by pressing channelized (G, H, J) pushbuttons on the SDS2 control panel. These pushbuttons are mechanically linked, permitting all three channels to be tripped simultaneously by a single push. A similar arrangement is found in the SCA.

The manual trip is provided to allow the operator to trip the reactor in the event of any accident for which operator action is required. The manual trip is credited only if an event is apparent to the operator from MCR indications and there is adequate decision and action time.

Trip Computer Watchdog

There is a watchdog-timer trip for the trip computer (TC). This occurs if the watchdog does not receive pulses from the TC at a frequency that confirms the TC is operating correctly.

7.2.2.2.3 Trip Logic Processing

General

There are three trip channels (G, H, and J), having completely independent and physically separated power supplies, trip parameter sensors, instrumentation trip logic, and annunciation. When any two of the three channels trip, the "poison" is injected into the calandria.

The trip logic in each channel is implemented using trip computers (TRCs). These are industrial grade, field-proven computers that implement all trip parameter, conditioning, and setpoints that are functions of reactor power and/or pump configuration. The digital outputs of the TRCs drive relays in the channel trip logic. The only trip logic external to the computers is that related to manual trips and TRC watchdog trips.

The logic is arranged so that no single failure of any component can prevent a trip from occurring when required.

Trip "Seal-In" and Reset

Once a trip has been initiated on a channel, it becomes "sealed-in" (i.e. held in the tripped state). Once all the trip parameters have cleared, the tripped channel can be reset by the momentary operation of a key-operated switch for that channel in the MCR.

Interlocks

Interlocks are provided as follows for interface with other systems:

a) SDS2 unpoised (i.e. fewer than five of six tanks in service or helium tank pressure low) shall inhibit moderator liquid poison removal (by the moderator purification system) and also shutoff rod and control absorber withdrawal.

b) The tripped condition of SDS2 shall inhibit withdrawal of shutoff rods and control absorbers and shall inhibit moderator liquid poison removal.

See Section 7.4.4 for additional details of these interlocks.

7.2.2.2.4 Testing

For SDS2, parameter testing checks the operation of an individual channel. The trip logic reacts to simulated parameter measurements in the same manner as actual trip conditions.

To guard against accidental tripping of two channels and the resulting reactor shutdown, the test logic provides inhibitors to ensure testing of only one channel at a time. Interlocks ensure that test signals can only be connected to one SDS2 channel at a time.

Parameter and loop selection for testing is done via the SSM that monitors the testing process. The result of the selection is to put the loop into a condition where a test signal can be injected to

exercise it to the tripped condition. Testing functions are executed by the SSM and test computers under control of the operator.

7.2.2.2.5 Maintenance

SDS2 incorporates appropriate redundancy and provisions for maintenance, so that requirements for system availability will be met.

The design of SDS2 allows maintenance to be done on any part of the system without impairing its availability. If maintenance is to be done on any measurement loop or logic component, that channel is placed in a tripped condition, ensuring availability. In this state, an SDS2 system trip will occur on a trip of any one of the remaining two channels, ensuring system availability. SDS2 components that may require maintenance during reactor operation are located in accessible areas.

Most of the process trips are conditioned out at low power. This allows process maintenance to be performed (e.g. pressurizer, steam generators) without tripping the channel.

Table 7.2.2-1
Shutdown System Number Two Trip Parameters

Trip Parameter	Detector Type	Conditioning Parameters
High Neutron Power	Horizontal In-core Detectors	-
High Rate Log Neutron Power	Ion Chambers	-
Heat Transport System Low Pressure	Pressure Transmitters	Conditioned out at low power. Setpoint is function of reactor power
Heat Transport System High Pressure	Pressure Transmitters	-
Heat Transport System Flow	Flow Transmitters	Conditioned out at low power.
Pressurizer Low Level	Level Transmitters	Conditioned out at low power. Setpoint is function of reactor power
Moderator Low Level	Level Transmitters	Conditioned out at low power.
Moderator High Level	Level Transmitters	-
High Reactor Building Pressure	Pressure Transmitters	-
Steam Generator Low Level	Level Transmitters	Conditioned out at low power. Setpoint is function of reactor power
Manual	-	-
TRC Watchdog Timer	-	-

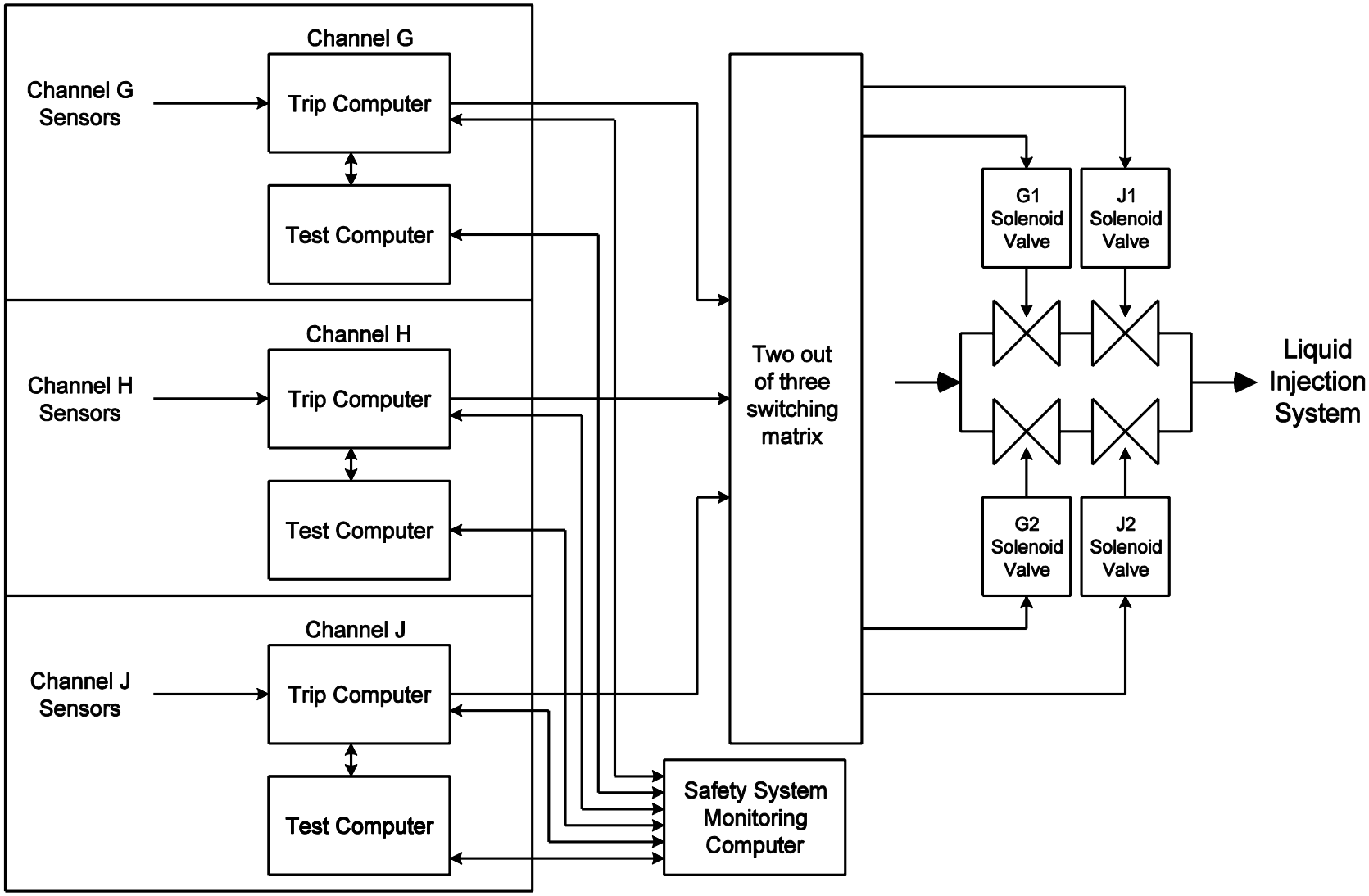

Figure 7.2.2-1 Shutdown System No. 2 – Block Diagram

7.2.3 Emergency Core Cooling System

This section covers instrumentation and controls required for actuation and operation of the ECI system, which constitutes the high-pressure injection portion of the ECC system. The process-related aspects of the ECI including design-basis events are described in Section 6.4.1.

7.2.3.1 Emergency Coolant Injection System

7.2.3.1.1 Design Requirements

General requirements applicable to the safety systems (including ECC) are summarized in Section 6.1.1.

The functional capability and functional assurance requirements specific to ECI are summarized in Section 6.3.1 and expanded on in the sections below.

7.2.3.1.2 System Description

General

The ECI system is the high-pressure injection portion of the ECC system. The ECI system function is to refill the reactor core and cool the fuel by high-pressure injection immediately following any accident that results in loss of heat transport system (HTS) coolant inventory to such an extent that heat removal by normal means is not assured.

Separately initiated by the ECI logic is the supporting function of steam generator crash cooldown by opening of the main steam safety valves (MSSVs). Following ECI operation, the LTC system will be automatically initiated to provide long term cooling. Sufficient monitoring systems are installed so that the operators can operate the ECI system properly, test its availability and monitor its operation.

Instrumentation and Control Functional Description

The ECI instrumentation and control functions not only detect a LOCA but also initiate various operations of ECI and its support systems to make ECI effective. Measurement shall be provided for ECI actuation, interlocking logic, and display/alarm purposes.

Testing

The ECI system equipment shall be tested at suitable intervals to prove that the system meets its fundamental availability requirement. The following requirements are imposed on the periodic test facilities:

Dedicated test facilities shall be provided for on-power testing to confirm that the ECI will operate correctly when called upon to do so, and to demonstrate the required unavailability of the

system. Testing procedures shall minimize the possibility of a spurious injection caused by an error in the testing, or a coincident failure in another part of the initiation circuits. If the complete system operation cannot be tested on power, a series of overlapping tests shall be provided to check subsystem operation (from instrumentation to motor or valve operation).

Test facilities shall be provided to confirm the operation of individual channels of the system, including confirmation of the setpoints for automatic action and the response times of critical equipment (where time of response is important to overall system operation).

Maintainability

For ECI instrumentation and control equipment that is to be maintained at power, the system is designed so that ECI remains available, the coolant injection path open, and containment integrity maintained. Where two parallel valves are provided, where either of which, on opening, would provide the required flow path, controls and power supplies to each valve is separate and independent.

Process Parameter Measurement Loops

ECI provides measurements for ECI actuation, for interlocking logic, and for display and alarm purposes. ECI is initiated by measurements of low HTS header pressure conditioned by any one of the three conditioning parameters; high reactor building pressure, high moderator level, or sustained low HTS pressure.

ECI Logic Processing and Control

- ECI Injection Logic

  Each ECI initiating and conditioning signal goes into the ECI injection logic and the SG crash cooldown logic.

  Within each injection control logic circuit, if 2/3 channels of HTS header pressure alarm and if 2/3 channels of a conditioning variable alarm, a LOCA has been detected for injection purposes. The ECI injection accumulators are isolated on low accumulator level.

- Steam Generator Crash Cooldown

  To achieve effective steady-state core cooling over the full range of heat transport system break sizes, automatic steam generator cooldown is required as part of the ECI operation. The MSSVs are typically used to protect the steam system from overpressure, and are self-actuating. Additional power-operated actuators are provided to open the valves when the ECI has to operate. Valve status is provided in the MCR for each valve to indicate valve-open position. Alarms for each valve alert the operator when a valve is not in its correct state. The SG crash cooldown logic is generally the same as the ECI initiation.

  The MSSVs also allow the steam generators to be used as heat sinks under certain accident conditions, with long term reactor decay heat removed by discharging steam through the MSSVs and make-up water supplied from the reserve water system. Actuation of the MSSVs for this purpose is manual.

- System Testing

  The complete system operation cannot be tested on power so a series of overlapping tests are required to check subsystem operation from instrumentation loops to the final active elements. Since only one channel is tested at a time, ECI remains available during the test. To minimize errors in logic testing, various test permissives must be satisfied before logic testing can proceed.

7.2.3.2 Long Term Cooling System

7.2.3.2.1 Introduction

This section covers instrumentation and controls required for actuation and operation of the long term cooling (LTC) system, which constitutes the long-term recovery stage of the ECC system.

7.2.3.2.2 Design Requirements

General

General requirements applicable to the four safety systems (including the ECC) are summarized in Section 6.1.1.

The functional capability and functional assurance requirements specific to LTC are summarized in Section 6.4.2 and expanded on in the sections below.

Functional Requirements

The basic functional requirement dictates that following a LOCA, LTC shall be capable of maintaining or re-establishing sufficient cooling of the core fuel and fuel channels so as to limit the release of fission products from the fuel and maintain the fuel channel integrity.

Instrumentation and Control Functional Requirements

Upon receipt of a command from the ECI system, the LTC pumps start and the LTC sump isolation valves are opened when sump level reaches the selected setpoint. Water from the reserve water system (RWS) shall be dumped to the LTC sumps based on the same command. The LTC system shall open the header isolation valves after the receipt of another command from the ECI system signalling the completion of injection phase of ECI operation.

LTC instrumentation provides monitoring of the status of the LTC pumps and motors, and the system pressure, flow, and temperature.

Maintainability

For LTC instrumentation and control equipment that is to be maintained at power, the system shall be designed so that LTC remains available, the coolant injection path open, and containment integrity maintained.

7.2.4 Containment System Instrumentation and Controls

7.2.4.1 Introduction

The containment system is a safety system, with the function of limiting releases of radioactive material from within containment generally; it prevents releases in excess of the site dose limits.

The containment system consists of the reactor building and liner, electrical and process penetrations and other appurtenances, which together form the containment envelope. In addition, the following subsystems act to ensure the continuity of the containment envelope or to reduce the contained pressures and energies following an accident:

- Main and auxiliary airlocks for the passage of personnel, equipment and fuel.
- Containment isolation.
- Equipment for hydrogen control (e.g. air coolers for mixing, passive auto-catalytic recombiners for H_2 reduction).

This section describes the instrumentation and controls relating to these containment subsystems. The functioning of the containment system as a whole, and the requirements thereto, are described in Section 6.5.

7.2.4.2 Design Requirements

7.2.4.2.1 General Requirements

General requirements applicable to the containment system instrumentation and controls, including the general approach for the four safety systems, redundancy, and other general requirements, are outlined in Section 6.1.1.

Requirements specific to the containment system are defined in Section 6.5.1.

7.2.4.2.2 Derived Requirements

Unavailability

a) No unavailability target has been set for the following subsystems for the reasons given:
   1) Gross leakage monitoring: monitoring function only, does not perform any containment function during or after any accident;
   2) RB vapour recovery and ventilation exhaust filter systems: optional manual operation following an accident; not a containment subsystem and not required or credited for any containment function.

b) Non-credible containment unavailabilities

The following low-probability failures of containment are not considered potential sources of containment unavailability because of basic operational, maintenance, or instrumental characteristics (noted in brackets after each):

1) Airlock open (status continuously monitored, closed operationally (one of two), with interlocks, and functioning tested periodically);
2) Structural failure (analysis and inspection);
3) Failure of static components (such as containment envelope).

c) Maintainability

Containment design shall have appropriate redundancy and provisions for maintenance, so that unavailability requirements will be met. All containment instrumentation and controls that may require maintenance during reactor operations shall be located in accessible areas.

Separation and Independence Requirements

a) Independence from ECC.

To ensure that simultaneous failures of containment and ECC cannot be caused by a single common-mode fault, the two systems are to be as independent of each other as practical.

b) Independence from process systems.

1) Where containment feeds common information-reporting elements in a plant process system (e.g. annunciation in the MCR), there shall be suitable isolation devices such that a fault in these common elements cannot affect containment system operation in an unsafe manner.
2) Containment instrumentation and controls shall not be disabled by an HTS pipe rupture (i.e., by pipe whip, steam blast, steam environment, etc.) such that the containment system does not meet its functional requirements.

Manual Actions

a) Critical safety related automatic actions shall have the capability of being initiated manually from the MCR. Manual provisions shall be such that the system cannot be left in an unsafe state.
b) Both the MCR and SCA shall contain instrumentation and controls for actions that may be required after initial automatic action, e.g. open vapour recovery and ventilation exhaust isolation valves, etc.

Testing

a) Dedicated test facilities shall be provided to confirm that the containment subsystems (including required support systems) will operate correctly when called upon to do so, and thus demonstrate the required availability of the system.
b) The test facilities shall confirm the operation of individual measuring and actuating elements, and individual channels of the system, including confirmation of setpoints for automatic

actions and equipment response times (where the response time is important to the system's safety related function).

Seismic Qualification

Containment shall be seismically qualified for a DBE, as follows:

a) All containment structures: DBE Category 'A'.

b) Airlocks: DBE Category 'B'.

c) Containment Isolation (including valves and dampers): DBE Category 'B'.

7.2.4.2.3 Subsystem Functional Requirements

The functional requirements for the containment subsystem instrumentation and controls are defined below.

Airlocks and Fuel Ports

a) Containment access facilities such as airlocks and fuel transfer ports shall have two successive containment barriers, which can be opened in turn to allow the passage of personnel, equipment, or fuel, with interlocks to prevent the simultaneous opening of both containment barriers.

b) To allow free access when the reactor is in a long-term (guaranteed) shutdown condition (see Section 7.3.3), it shall be possible to disable an airlock by using a key from the MCR.

c) Airlock door closure and the airlock-reactor building connection shall be designed to ensure that a fully capable barrier exists at all times, with annunciation of alarms to the MCR.

Containment Isolation

a) In the event of a LOCA or release of radioactivity within containment, the isolation subsystem shall automatically close all of the following openings in the containment envelope:

   - Any that are or may be open directly to the containment atmosphere, and
   - Any that are not part of a closed system outside containment.

b) Containment isolation shall be actuated for either a LOCA or a release of radioactivity within containment (i.e., without a rise in pressure), in sufficient time to prevent a release to the external environment exceeding the dose limits.

   As specified in Section 6.5.2.1.3, containment isolation is to be actuated on a two-out-of-three indication of the following:

   - Pressure inside containment exceeds differential pressure setpoint actuation value (differential with the service building),
   - High radioactivity measured in RB ventilation exhaust.

c) Isolation shall be locked-in on actuation until manually reset.

d) The isolation system shall have redundant measurements and valves and shall be testable on-line (from MCR).

e) Valves on process air lines larger than one inch shall have provision for leak-tightness testing.

f) Readings sufficient to confirm testing results shall be provided to the MCR, and readings sufficient to confirm system operation shall be provided to the SCA and (buffered) to MCR.

g) Main steam line isolation: on high containment pressure signal following a main steam break inside the RB and following leakage from the primary to the secondary side in the steam generator.

h) Other piping penetrating containment shall be isolated by normally-closed manual isolation valves, powered isolation valves operable from the MCR, check valves or other means of isolation.

To consider a manual isolation valve closed, it must either be locked closed, or continuously monitored to show it is closed.

Hydrogen Control

a) The reactor building air coolers are a normally operating (process) system, which shall be environmentally qualified in order to be credited for the following:
   - Reducing containment pressure and temperature following an accident;
   - Assisting hydrogen control by mixing concentrations of hydrogen into the containment atmosphere.

b) In addition, passive auto-catalytic recombiners shall be installed in the RB. The recombiners shall be capable of maintaining hydrogen concentration in an accident environment at hydrogen/deuterium concentrations below levels sufficient to sustain combustion.

7.2.4.3 System Description

7.2.4.3.1 Airlock Operation

a) The airlocks have two inflatable seals on each door. Door closure and seal inflation are monitored continuously (and alarmed in the MCR) to ensure that a fully capable containment barrier exists at all times.

b) Interlocks on airlocks and fuel ports prevent the opening of a containment barrier when the other containment barrier is not closed.

c) These interlocks can be disabled during guaranteed shutdown conditions by use of a key obtained from the MCR. Procedural controls do not allow this key to be used except during shutdown.

d) The main airlock personnel doors are tested (in effect) by their routine daily operation. The auxiliary airlock doors and main airlock equipment doors are operated on a monthly basis so as to provide a functional test. Functioning of the interlock is also confirmed at this time.

7.2.4.3.2 Containment Isolation

7.2.4.3.3 Containment Cooling System

a) System operation

Isolation is initiated on two-out-of-three local coincidence when reactor building pressure exceeds actuation setpoint, or high radioactivity levels are detected in either the RB ventilation system exhaust or the FM vault vapour recovery system exhaust.

The radioactivity monitors are designed to fail-safe, that is, indicate “high” on failure.

The single channel analyser count-rate meter is set to count photons. The monitor alarm setpoint is set to be sufficiently above background. It is adjustable since the background fields in the ducts where the activity is measured may build up with time. A trip signal is also sent on low alarm level (low count indicates failed detector).

Isolation is initiated on two-out-of-three coincidence on either pressure or radioactivity. The isolation is implemented in parallel “odd” and “even” logic, each closing one of a pair of isolating valves on each of the lines requiring isolation.

The isolation logic also provides parallel “odd” and “even” signals to start non-operating local air coolers.

Containment valves, dampers, and air coolers can also be actuated manually.

b) Testing

Complete closure test of all containment isolation valves is done periodically. Also, the isolation system logic, including the pressure and radiation monitors, is tested periodically.

The leak tightness of the containment isolation system dampers/valves is checked periodically. This is done by pressurizing the interspace between closed dampers/valves and measuring the pressure rundown.

c) The isolation initiating parameters, valve status, and alarms are indicated.

Local Air Coolers

The RB local air coolers (LACs) are a normal operating (process) system that provide an additional capacity for reduction of containment pressures and energies following an accident. LACs also assist in dispersion of hydrogen in the SG vaults and dome area after a LOCA event followed by a SDE.

The coolers in the fuelling machine and steam generator rooms have Class III fan power supply (sized for the steam/air densities and temperatures for accident conditions), service water on

Class III power, and the mounting supports are seismically qualified to DBE Category 'A' (so that the LACs do not damage other equipment or the service water connections in a DBE).

Available non-operating air coolers (on standby during normal operation) are switched on automatically by the containment isolation logic following a LOCA.

7.2.4.3.4 Hydrogen Control

Local Air Coolers

By circulating and mixing the containment atmosphere, the local air coolers assist in the control and dispersion of hydrogen within the reactor building.

The operation of the local air coolers in the event of a LOCA is outlined in the previous section.

Passive Auto-Catalytic Hydrogen Recombiners

A network of passive auto-catalytic recombiners is installed throughout the reactor building. The number, distribution, and location of recombiners will be determined by design and confirmed by analysis.

The mechanical installation provides accessibility and ease of maintenance. Preference has been given to a passive auto-catalytic recombiner design which has been tested for sufficient hydrogen reduction under exposure to harsh accident conditions. Where needed, protection is provided against mechanical damage (knock-off).

Hydrogen Monitoring

A hydrogen monitoring facility is in place to survey the hydrogen concentration in an area of the reactor building after an accident. The frequency of sample collection/analysis will depend on the nature of the accident.

7.2.4.3.5 Alarms and Displays

Alarms

Annunciation is provided to indicate any abnormal conditions for containment functions.

As an example, alarms are provided for the following:

- Activity exceeds setpoint (Isolation),
- Pressure exceeds setpoint (Isolation).

Displays

All information and controls required on the tripping parameters, system status, and operation required for safe operation of the plant is displayed in the MCR. This includes controls for manual initiation and for testing of containment functions.

Information and controls required for monitoring and control of containment functions are also found in the SCA.

7.2.4.3.6 Principles of Separation and Independence of Containment Systems

All information and controls required on the tripping parameters, system status, and operation required for safe operation of the plant is displayed in the MCR. This includes controls for manual initiation and for testing of containment functions.

Information and controls required for monitoring and control of containment functions are also found in the SCA.

General Principles of Separation and Independence

a) Each subsystem uses its own triplicated sensing elements and transmitters for measuring the radiation and pressure of the reactor building, and for the triggering of its safety function in case of a LOCA or MSLB event. This also involves the use of separate process taps and tubing.

b) Dedicated and triplicated logic circuits are used by each subsystem. Dedicated test circuits are also used.

c) The cross connections between containment subsystems are minimized and are achieved through the use of isolation circuits and dedicated dual redundant high reactor building pressure signals from the channels N and Q containment isolation logic circuits. This is also the case for standby local air cooler activation circuits following a LOCA or MSLB event.

Main Containment Subsystem

The following principles are followed to provide functional independence and separation for the containment isolation:

Separate and duplicated end devices are used along with dual electric power supplies (N, Q). The air supply to the series connected containment isolation valves is fed from the odd and even instrument air manifolds through two solenoid valves connected in series. The whole arrangement is designed to fail safe in the case of loss of either instrument air and electrical power supply. It should be noted that the failure of air supply to the containment isolation valves results in their closure.

Auxiliary Containment Subsystem

The following principles are followed to provide functional independence and separation for the airlocks, the reactor building air coolers, and the hydrogen control systems:

a) These containment subsystems use the odd and even separation of the sensing elements, the power supplies, the instrument air supply, the signal cable routing, containment penetrations, and equipment separation. The active components performing a containment function in the local air coolers use duplicated signals from channels N and Q in the logic circuits, which mitigates the effect of sharing of channels among the subsystems since it provides redundancy up to the power sources. The dual airlock seals installed at each airlock door use the same system of separation (odd or even). This does not present a problem because the seal control circuits are designed such that the seals remain inflated when electrical power is lost.

b) Separate and dual end devices are used along with dual electric power supplies (N, Q). Each airlock door is fitted with two inflatable seals. Similarly, local air coolers in areas that will bear the impact of a LOCA and a MSLB are backed by standby units that are started automatically upon a high reactor building pressure signal.

7.3 Requirements for Safe Shutdown

7.3.1 Systems Required for Safe Shutdown

This section describes instrumentation and controls (I&C) required to do the following:

- Shut the reactor down and maintain it in a safe shutdown condition, and
- Provide an adequate heat sink during shutdown (i.e., initially cool down the core and thereafter remove the heat produced).

a) Means for Initiating Shutdown

The reactor can be shut down safely during both normal operations and abnormal conditions by a variety of means, including the following:

- Reactivity controls (both automatic and manually-initiated),
- SDS1 (automatic or manual trip),
- SDS2 (automatic or manual trip),

These alternative means of shutdown are described in Section 7.3.2.

b) Safe Shutdown Condition

Once at very lower power, the reactor must either have all safety systems remain available, or it must be put in a guaranteed shutdown state (GSS). This ensures that reactivity changes occurring after shutdown cannot inadvertently make the reactor critical again (see also Section 7.3.3). In GSS, the long term cooling system and either SDS1 or SDS2 must be available.

c) HTS Cooldown After Lowering Reactor Power

Cooldown of the HTS system after lowering reactor power to very lower power levels is described in Section 7.3.4. Normally, cooldown is attained by a controlled rundown of steam generator pressure using the steam generator pressure control (SGPC) program (see Section 7.5). However, there are other alternatives for initiating HTS cooldown after lowering reactor power:

- Manual opening of the atmospheric steam discharge valves (ASDVs),
- Manual opening of the main steam safety valves (MSSVs).

The MSSVs are self-operated once the actuation signal is received. Note also that use of the MSSVs to cool down HTS after lowering reactor power is not a normal cooldown process.

The HTS pumps (powered by Class IV power) are normally operating during a cooldown, but their availability is not a requirement. If they are not available, thermosyphoning will maintain sufficient HTS circulation to the SGs for the cooldown.

Water make-up to the steam generators is required during the cooldown either from the feedwater circuits or from the reserve water system (RWS).

d) Heat Removal at Low Reactor Power Levels

The long term cooling (LTC) system is designed to reduce the HTS temperature at low reactor power conditions and, and thereafter to remove decay heat produced in the core after shutdown. Instrumentation and controls for the operation of LTC system are described in Section 7.2.3.

Support systems required for the functioning of the LTC system cooling include Class II and III power supplies (odd and even), and cooling water in the form of RSW and RCW.

If the LTC system was not available in the event of a DBE, emergency supply of cooling water could be obtained from RWS.

Operation of the LTC System in shutdown cooling mode is conditional on the HTS circuit being intact (that the HTS feed system can keep the circuit sufficiently filled to allow LTC to function). If the HTS circuit is not intact, core cooling at low power is maintained using the LTC through recovery of water from the LTC sumps (see Section 7.2.3).

e) Control Room Facilities

Control and indication requirements for shutdown conditions are available in either control room are described in Section 7.6.

7.3.2 Means for Reducing Reactor Power

7.3.2.1 Reactivity Controls

Although the reactor regulating system (RRS) is not the only means of reducing reactor power plant operation, it is the normal and preferred method. The RRS power reduction is at a controlled rate, limiting the stress to plant systems (e.g., HTS and steam generators).

During serious plant upsets or potentially unsafe operating conditions, the reactor power is reduced to low levels or derated automatically via the reactor power setback and stepback functions which are described in Section 7.5.1 RRS also reduces reactor power in response to commands from the operator.

The RRS is characterized by a high degree of immunity to small process upsets, measurement failures, etc., due to a high degree of redundancy in control devices and process measurements (usually triplicated channels). Extensive checks are performed in the control programs to ensure that faulty signals are discarded. In cases of loss of a signal or an entire set of signals, alternative measurements are used. The reactor stepback function is independent of all other RRS functions. In case of failure of a control device, a backup is used. It may be necessary to derate the reactor because of limited information or off-nominal flux shape, but only as a last resort is the reactor shut down (safely) by the operator.

This ability to maintain control in the presence of partial system failures, combined with the high reliability of the distributed control system, leads to a very high availability of the RRS.

The reactivity depth of the zone control units in conjunction with the eight control absorbers is sufficient to shut down the reactor even in the fresh fuel state when the fuel temperature reactivity feedback is at its maximum.

The normal method of maintaining the reactor adequately subcritical is by the manual addition of poison to the bulk moderator. Addition of moderator poison is also a possible but unlikely means for the operator to reduce reactor power to low levels. The poison solution is pre-mixed in the respective tank and can be added under gravity to the moderator circulating pump suction line by opening a single valve from the poison tank, via controls in the main control room.

The moderator poison system has a very large reactivity depth and is capable of reducing reactor power, and keeping it adequately subcritical under any conditions. Plant operating procedures define the level of moderator poison required to achieve the guaranteed shutdown state (GSS) in various circumstances.

Gadolinium poison addition can also be automatically initiated by the RRS control program in situations where more negative reactivity is required. The concentration of poison in the moderator is determined by sampling and chemical analysis.

Removal of poison from the moderator is via the moderator ion exchange purification facility. Procedural controls (see Section 7.3.3) ensure that no poison removal takes place during a deliberate shutdown state using moderator poison. Successful poison addition requires the moderator circulating pumps to be operating.

7.3.2.2 Shutdown System No. 1 (SDS1)

SDS1 automatically and rapidly reduces reactor power to levels in response to any of a large number of design basis events for which shutdown is required. In addition, an SDS1 manual trip facility is provided in both control rooms (MCR and SCA) whereby the operator can initiate a fast power reduction in a perceived emergency.

SDS1 is described in detail in Section 7.2.1. In the GSS or during a poison-out period, the SDS1 shutoff rods normally are withdrawn (replaced by the addition of moderator poison per Section 7.3.3) and SDS1 is re-poised (unless SDS1 is being maintained, in which case SDS2 must be available and poised). This ensures continuing protection at all times.

7.3.2.3 Shutdown System No. 2 (SDS2)

SDS2 is also actuated automatically in response to events for which a large reactor power reduction is required, and may also be actuated manually from either control room (MCR or SCA). The system is described in Section 7.2.2. During GSS the system is normally isolated to prevent actuation while in GSS, unless SDS1 is unavailable.

7.3.2.4 Moderator System Drainage

Another method of reducing reactor power is simply to drain the moderator out of the reactor into a separate storage tank. This is a very slow process which must be initiated manually by opening a local valve. It is also a very unlikely means of reducing reactor power to low levels, but it is possible.

7.3.3 Guaranteed Shutdown State

A guaranteed shutdown state (GSS) is one in which the reactor will remain in a sub-critical stable state with a pre-defined margin, independent of any perturbation reactivity effect produced by any change in core configuration, core properties, or process system failure. GSS is established by poisoning the moderator. The specified GSS moderator poison concentration maintains reactor sub-criticality following any credible set of events. The limiting accident scenario is an in-core LOCA resulting in dilution and displacement of poisoned moderator.

When in GSS, the moderator purification system is isolated with all closed isolation valves padlocked. Specific operational procedures must be followed such as verifying of the poison concentration in the moderator once per shift (moderator samples taken and chemically analyzed). The reactor must be placed in GSS if at any time the operator is unable to maintain it in a critical state, under RRS control, with both Shutdown systems available.

7.3.4 Cooldown and Heat Removal after a Reactor Power Reduction

Heat transport temperature is controlled indirectly by controlling steam generator pressure. Special cooldown procedures incorporated in the steam generator pressure control (SGPC) program allow heat transport temperature to be lowered, at controlled rates, up to a maximum of 2.8°C per minute.

Automatic cooldown from any initial heat transport temperature can be initiated by the operator in the MCR. The desired cooldown rate would be entered and SGPC ramps down the steam drum pressure setpoint at a rate that corresponds to the desired rate of change of temperature.

When the reactor is to stay at very low power for an extended period, there is often a requirement to cool down and depressurize the heat transport system. The initial action is to adjust the ‘solid mode’ pressure setpoint for the pressurizer and heat transport system to the existing value in the heat transport system. Control is then switched to solid mode and the pressurizer is isolated. The pressurizer heaters may then be switched off and the pressurizer cooled down. The HTS pressure setpoint may be lowered during or after cooldown but the pressure at the main pump suction must always be maintained well above the saturation pressure of the system.

HTS cooldown from hot shutdown to long term shutdown conditions is normally accomplished by using the HT pumps and condenser steam discharge valves (CSDVs). The discharge capacity of the valves is more or less proportional to steam generator pressure and, as this pressure decreases during cooldown, progressively larger valve openings are required to maintain a given temperature rate. If the main condenser is unavailable, cooldown proceeds via the ASDVs alone,

at a rate limited by the capacity of these valves. It is estimated that two hours will be required, using only the ASDVs, to lower the system temperature to conditions at which the LTC System can take over to cool the HTS.

Heat removal during a long term reactor outage is provided by the LTC heat exchangers with circulation by the LTC pumps. When the primary system temperature falls to 54°C, the heat transport system may be depressurized and drained to the headers for maintenance of steam generators and HTS pumps.

7.4 Other Safety Related Systems

This section covers instrumentation and controls for other systems which perform safety related functions. These systems include the following:

- Reserve Water System
- Main Steam Isolation Valves
- Safety Related Interlocks
- Second Steam Generator Crash Cooldown System
- Shield Cooling System

7.4.1 Reserve Water System

7.4.1.1 Introduction

This section covers instrumentation and controls required for operation of the reserve water system (RWS). The RWS is a demineralized light water storage and distribution system designed to deliver water by gravity to a number of systems whenever normal water sources are unavailable or make-up water is required. The RWS functions assist in accident mitigation to achieve plant safety goals. Interfacing systems (users) include the heat transport system, the moderator system, the steam generators (SGs), the long term cooling (LTC) system, and the shield cooling system.

The specific functions of the RWS are given in Section 9.

Sufficient process information and control capability are provided in the MCR/SCA to enable the RWS system to be operated and to achieve satisfactory reactor decay heat removal by other systems on long term basis.

The reserve water system is a backup water system and hence is non–operational under normal circumstances. The reserve water tank, located at a high elevation in the reactor building, is a key component of the reserve water system. The tank provides a passive light water make-up system since no external power is needed to transfer its inventory to the various potential users once the isolation valves are opened.

The tank is connected to the interfacing systems by means of piping fitted with remotely controlled isolation valves.

7.4.2 Main Steam Isolation Valves (MSIVs)

The main steam isolation valves (MSIVs) automatically close on high reactor building pressure condition by process conditions so as to reduce the pressure and temperature in the reactor building during main steam line break events inside the reactor building.

7.4.3 Safety Related Interlocks

7.4.3.1 Identification

A safety related interlock is where the operation of a process system is inhibited or modified by a portion of a safety system in order to ensure the performance capability of the safety systems.

Note that safety related interlocks do not include actions taken within a safety system, in response to that system's logic, to ensure the system's proper response to an event, nor does it include actions taken by a process system, within and of itself, or of interactions between different process systems, in response to an indicated upset or accident condition.

In accordance with the above definition, the safety related interlocks are as follows:

a) Removal of moderator poison by moderator purification system is inhibited under the following conditions:
   1) When SDS1 is unavailable (fewer than 22 of 24 SORs fully withdrawn, see Section 7.2.1).
   2) When SDS2 is tripped or unavailable (see Section 7.2.2).

7.4.3.2 Requirements

Any interlocks between a safety system and a process system that are provided to ensure the necessary effectiveness of the shutdown system shall be designed to shutdown system standards.

7.4.3.3 Moderator Purification Inhibit

Isolation valves on each of the ion exchange columns are controlled from the MCR, with positions "Closed" and "Auto/Open". In the "Auto/Open" position, the valve opens if both shutdown systems are available, and closes when either SDS is unavailable. In addition, two isolation valves have been added to the purification inlet line.

Logic contacts provided by SDS1 and SDS2 (indicating the continued availability of each system) are fed into the pneumatic control loops for the ion exchange (IX) column isolation valves and the two purification inlet isolation valves. The unavailability signal is also alarmed to the MCR.

The purification isolation meets shutdown systems standards as follows:

a) Fail-safe: valves fail closed on loss of instrument air or control power, or loss of signal from either SDS1 or SDS2.
b) No single random component failure can impair system operation.
c) Seismically qualified: the valves are seismically qualified.

d) The interlock (valve closure) cannot be manually by-passed by the operator, but valve closure (isolation) can be manually initiated.

e) Environmental qualification: the purification inlet isolation valves are required to be environmentally qualified.

7.4.4 Steam Generator Second Crash Cooldown System

A steam generator second crash cooldown is initiated to open the MSSVs under a LOCA condition. This backs up the steam generator crash cooldown that is part of the ECI system.

Second crash cooldown is initiated on low HTS header pressure, conditioned on high reactor building pressure (out-of-core breaks) or high moderator level (in-core-breaks), or sustained low HTS header pressure (small LOCAs). Instrumentation for these signals are independent of those for the ECI initiation.

7.4.5 Shield Cooling System

The shield cooling system is described in Section 9, Sub-section 9.5.6.

The shield cooling system shall ensure that the reactor maintains structural integrity. The shield cooling system will have sufficient displays, alarms, and controls to ensure that the calandria vault and end shields have sufficient water inventory and are adequately cooled.

7.5 Control Systems Not Required for Safety

This section describes those controls that are used for normal operation, but which are not addressed in Sections 7.2 to 7.4.

- Reactor regulating system (RRS)
- Overall plant control (matches reactor power to turbine generator)
- Steam generator pressure control (SGPC) and steam generator level control (SGLC)
- Heat transport pressure and inventory control system (P & IC)

These instrumentation and control systems, while safety related, are not relied upon to perform any protective functions following anticipated operational occurrences or accidents, but are designed to prevent normal plant operations from leading to failures requiring protective action.

In addition, core monitoring instrumentation and general process instrumentation are also described in this section.

7.5.1 Reactor Regulating System (RRS)

7.5.1.1 Introduction

The reactor regulating system is that part of the overall plant control system that controls reactor power, and manoeuvres reactor power in accordance with specified setpoints.

7.5.1.2 Design Requirements

7.5.1.2.1 General Requirements

General requirements applicable to the reactor regulating system include:

a) RRS shall have a design target frequency of one loss of regulation incident every one hundred years,

b) RRS shall remain effective following the failure of any single device, any single power source, or any device signalled and/or actuated by an external power source.

c) RRS devices, including control output signals, shall be selected to be fail-safe where such a choice is available. Where individual devices do not fail safely on loss of power, they must be grouped with fail safe devices and the group connected to power supplies, if practical, in a way that the group outputs shall be fail safe. Where instrumentation devices do not fail safely on loss of power, the loss of power condition shall be annunciated. The sensing for this condition shall be derived from the output signal of the instrumentation device if possible.

7.5.1.2.2 Functional Requirements

The functional requirements of this system are as follows:

- To provide automatic control of reactor power to a setpoint at any power level between 10^{-9} FP and full power as specified by the operator ("Reactor Leads" mode of operation), or to the power level required to maintain steam pressure in the steam generators ("Turbine Leads" mode of operation).
- To manoeuvre reactor power at controlled rates between any two power levels in the automatic control range (above 10^{-9} FP).
- To insert or to remove reactivity devices at controlled rates to maintain a reactivity balance in the core. These devices compensate for variations in reactivity arising from changes in xenon concentration, fuel burnup, moderator poison concentration, or reactor power.
- To maintain the neutron flux distribution close to its intended flat shape, with no substantial side-to-side, top-to-bottom, or end-to end tilts, so that the reactor can operate at full power without violating bundle or channel power limits.
- To monitor a number of important plant parameters and reduce reactor power at appropriate rates when any of these parameters are out of limits. Parameter limits may be specified for economic or safety reasons.
- To withdraw shutoff rods from the reactor automatically when the trip channels have been reset following a reactor trip on SDS1.
- RRS shall be physically and functionally separated from the safety systems in order to minimize the possibility of a failure of the RRS, or the occurrence of an external event that could produce such a failure, from also disabling the protection provided for that event.

7.5.1.3 System Description

7.5.1.3.1 General

The reactor regulating system is composed of input sensors (fission chambers, in-core flux detectors, and process measurements), reactivity control devices (zone control units, control absorbers), hardware interlocks, and display devices.

The power measurement and calibration routine uses measurements from a variety of sensors (self-powered in-core flux detectors, fission chambers, process instrumentation) to arrive at calibrated estimates of bulk and zonal reactor power.

The demand power routine computes the desired reactor power setpoint and compares it with the measured bulk power to generate a bulk power error signal that is used to operate the reactivity devices.

The primary reactivity control devices are the 18 zone control absorber elements (configured as nine units each containing two absorber elements). The zone control absorber element insertions are varied in unison for bulk power control, or differentially for tilt control.

In the "Turbine Leads" mode of operation (See Section 7.5.2.1 for details) the reactor power setpoint is calculated by the steam generator pressure control program. In the "Reactor Leads" mode of operation (See Section 7.5.2.1) the reactor power setpoint is set by the operator, or, in the case of abnormal plant conditions requiring power reductions, is automatically calculated by the RRS program.

In addition to controlling reactor power to a specified setpoint, the reactor regulating system monitors a number of important plant variables, and reduces the reactor power when any of these variables exceed specified limits. This power reduction may be fast (stepback), or slow (setback), depending on the possible consequences of the variable lying outside its normal operating range.

The signal processing logic associated with RRS, implemented in the distributed control system (DCS), is redundant and fail-safe in software and hardware (see Section 7.6.3).

A general block diagram of the reactor regulating system is shown in Figure 7.5-1.

7.5.1.3.2 Reactor Regulating System Programs

Reactor Power Measurement and Calibration

The reactor regulating system uses measurements of reactor power and zone power for bulk and spatial control of the reactor. A number of flux and thermal power measurement devices are provided. Flux measurements are obtained from the following sources:

- Triplicated fission chambers located on one side of the calandria (Channels A, B and C),
- Duplicated prompt-response in-core detectors (Channels A and C),
- Non-redundant self-powered flux mapping detectors distributed through the reactor core (Channels A, B, and C).

At very low power levels, the fission chambers are the only measurements of reactor power levels. At higher power levels all three sources are used for measuring flux.

Thermal power measurements are provided from the following sources:

- Resistance temperature detectors (RTDs) located on inlet and outlet headers,
- Feedwater flow measurements at the steam generators,
- Steam flow measurements at the steam generators.

The reactor regulating system uses estimates of the fission chambers and the flux detectors to generate fast, approximate zone and bulk reactor powers. These estimates generate short-term power error signal to drive the zone control units and stabilize the flux in the core. Over a longer

time span, these signals are slowly calibrated to agree with more accurate estimates of reactor and zone powers calculated from thermal measurements and flux mapping respectively.

The reactor power measurement and calibration is made as tolerant as possible to the sudden loss of various measurements. A number of spread checks ensure that all measurements are in reasonable agreement. Measurements that fail the spread check are rejected.

Demand Power Routine

The demand power routine serves three functions:

a) It determines the mode of operation of the plant, i.e., "Reactor Leads" vs. "Turbine Leads".

b) It calculates the reactor setpoint, and the effective power error that is used for driving the reactivity control devices,

c) It automatically adds poison to the moderator if required.

The source of the reactor power request depends upon the selected operating mode.

"Reactor Leads": In this mode of operation, the reactor power set point is adjusted to the desired value and the turbine output automatically seeks its highest value allowed by that reactor power. This control mode is always used during upset conditions and at low power levels, but is also suitable for normal operation when the unit is used as a "base load" supply to the grid system.

"Turbine Leads": In this mode of operation the turbine load set point is adjusted to the desired value and reactor power is raised or lowered to maintain steam pressure. This mode of control makes the unit inherently responsive to significant grid frequency changes. A frequency drop opens the governor valves and causes a drop in steam pressure. This in turn causes reactor power to increase (within limits) in order to maintain the required steam pressure.

During reactor setback, the demand power routine receives a negative manoeuvring rate from the setback routine. Should the reactor be already reducing power at a greater rate, the setback rate is ignored; otherwise the setpoint is ramped down at the setback rate. On receipt of a setback or if a SDS1 or SDS2 reactor trip has occurred the demand power routine will run back the turbine so as to maintain steam generator pressure (regardless of the operating mode).

Reactor Control and Flux Shaping

The primary control elements are the nine zone control units, each of which contains two separate absorber elements, one in the upper half of the reactor, the other in the lower half. Each absorber element is driven by its own brushless DC servomotor, for bi-directional variable speed control, which allows each element to be positioned independently. Under normal operation, they may be moved in or out of the reactor core under automatic control of the reactor regulating system.

These primary controllers are supplemented by the addition and removal of moderator poison (normally manually initiated) and by eight control absorber units, which supplement the shutdown depth and rate of the controllers. The eight control absorber units, which are also

provided as part of the reactor regulating system, are physically identical to the shutoff units, and normally reside out of the core. Not all of the zone control units are used for bulk- and spatial-control purposes, at any given time during normal operation.

The ACR-700 reactor has a fairly strong negative power coefficient, which makes the reactor stable, both in terms of total power and tilts. Therefore, relatively little active control is required. The ACR-700 reactor has no unstable spatial xenon oscillations. Basic tilt control (side-to-side, top-to-bottom, and end-to-end) is provided in the reactor core to guard against tilts caused by refuelling or other effects. Some of the remaining zone control units are normally kept fully inserted into the core, to provide a small amount of reactivity override, to compensate for xenon transients following small power reductions, temporary inability to fuel, etc.

In the base-load design configuration, the reactor can rapidly reduce power to approximately 75 percent of nominal full power following steady-state full power operation, without poisoning out, and continue to operate at that power level indefinitely.

The eight control absorber units, usually fully withdrawn, under normal operation are available to provide additional negative reactivity to allow controlled shutdowns.

Reactor Setback and Stepback Functions

The reactor setback and stepback functions monitor process conditions and reduces power automatically if off-normal conditions are detected. Conditions requiring only a slow power reduction initiate setbacks, which are controlled downward ramps of the reactor power set point. Conditions requiring relatively fast power reductions initiate stepbacks, which involves dropping the control absorbers into the core. The reactor stepback function is independent of all other reactor regulating system functions.

Flux Mapping Routine

The flux mapping program periodically measures the in-core flux detector readings and calculate best estimates for:

a) average zone fluxes or flux tilts (to be used in controlling reactor flux tilts);

b) maximum effective flux in the reactor (to be used to determine whether power reduction (setback) is required);

c) bundle powers, channel powers, and fluxes at the various detector sites (for off-line monitoring).

7.5.1.3.3 Reactivity Control Units

Detailed descriptions of the reactivity control units are given in Section 4. Only salient features relevant to regulating system operation are re-capitulated here. The reactivity unit layout is shown in illustrations associated with Section 4.1.

Zone Control Units

The zone control units are the principal reactivity control devices, used both for control of total reactor power and for control of flux tilts (spatial control).

For control of overall reactivity, a sufficient number of zone control units is provided to allow adequate reactivity reserve to handle brief periods of refuelling incapability and xenon transients due to small reactor power changes, in addition to normal control requirements, including start-ups and shutdowns.

Control Absorber Units

Control absorbers, normally withdrawn from the reactor, provide additional negative reactivity to back up the zone control units. They have the capability to shut down the reactor independently of the shutdown systems. They are capable of being dropped into the reactor as well as being driven in and out.

Poison Addition and Removal System (Moderator Liquid Poison System)

Two moderator poison addition systems are provided:

- Boron addition, initiated manually, is used as a source of long-term negative reactivity when the reactor has excess fuel reactivity.
- Gadolinium addition, normally initiated manually, is used as a source of short-term negative reactivity, to compensate for a lack of xenon (gadolinium burns out at a rate similar to xenon production rate.) Under special conditions (positive flux rate and large power error) RRS will add gadolinium automatically.

Reactivity Interlocks

The reactivity mechanisms are subject to a number of interlocks to reduce the likelihood of a loss of regulation.

When the reactor is in a tripped state (either SDS1 or SDS2 not available), the control absorber units are inhibited from being withdrawn, and poison removal is prohibited, to prevent the addition of positive reactivity. This is to prevent the reactor from being started up with insufficient shutdown capacity being available. These interlocks between shutdown systems and normal process systems are described in Sections 7.2.1, 7.2.2, and Section 7.4.4.

With the exception of the zone control units, which are controlled only from the DCS, the control absorber units can also be manually controlled from the main control room. When manual mode is selected, the CA units are unavailable to the reactor regulating system program except for the CA control which remains available for a stepback.

7.5.1.3.4 Reactor Regulating System Instrumentation

Instrumentation which measures the reactor neutron flux and rate of change of neutron flux is implemented to provide information on the state of the reactor core to the operating personnel and to the reactor control systems during shutdown, startup, steady power, and during power manoeuvres.

This instrumentation is physically and electrically separated from that used for the two shutdown systems described in Sections 7.2.1 and 7.2.2.

Startup Instrumentation

When any of the regulating or protective fission chambers are reading off-scale low, Startup Instrumentation is connected and used to monitor neutron flux in the core. This instrumentation uses channelized detectors and measurement circuits to measure neutron flux and contact modules to compare the values to manually-selected setpoints. When necessary, the contact modules are connected to the SDS1 trip logic to provide a startup instrumentation trip parameter.

Fission Chamber System

The fission chamber system is capable of measuring neutron flux in the very low power range. Measurements are provided which are proportional to the logarithm of neutron flux and to the rate of change of log neutron flux.

In-Core Flux Detector System

The in-core flux detector system provide measurements of neutron flux in the high power range (>5% FP). Two types of in-core flux detectors are required:

- Prompt-responding detectors, to measure the flux in each zone controlled by spatial control system. Signals from these detectors provide the primary feedback signal for bulk control.
- Neutron responsive detectors, are provided to measure the flux at numerous points in the reactor for use in mapping the reactor flux shape. These detectors do not need to respond promptly.

7.5.1.3.5 Reactor Regulating System Controls and Displays

RRS displays and controls are provided on the control panels in the main control room for operator control and monitoring activities. Most of these controls and displays are “soft”, i.e., performed by the plant display system; only a very small number of critical displays and controls need to be independent of the plant display system. The RRS control panel may be a separate panel dedicated to RRS, or it may be shared with other closely related systems.

7.5.2 Overall Plant Control System

7.5.2.1 Introduction

The overall plant control system is similar to that used in conventional steam plants. Digital computers are used to perform all the control and monitoring functions.

The plant control scheme is based upon the requirement of keeping the pressure in the steam drum of the steam generators relatively constant. A general block diagram of the overall plant control system is shown in Figure 7.5-2.

In the "Turbine Leads" mode of operation, responding to the turbine-generator load changes, the steam generator pressure control program requests variations in reactor power to maintain drum pressure at a constant. The plant is automatically sensitive to grid fluctuations. For example, a frequency drop would cause the turbine control valves to open further; the resulting drop in steam drum pressure would cause the steam generator pressure control program to request an increase in reactor power.

There is a "Reactor Leads" mode of operation in which reactor power is controlled to a setpoint supplied by the operator. The steam generator pressure control program then manipulates the plant loads to keep steam drum pressure constant. This mode is used in the following conditions:

a) At low powers, when the steam drum pressure is insensitive to reactor power,

b) In some upset conditions, where it may not be desirable to manoeuvre reactor power.

c) If a constant maximum reactor power operation is desired, at the expense of the station not contributing to the grid frequency control.

For the purpose of overall plant control, the reactor can be regarded as a source of power that should quickly respond to the changing demands of the plant loads. The reactor is not always able to meet this requirement because of certain constraints:

a) For safety reasons, certain plant variables, if out of limits, are made to trip the reactor. The plant loads must be capable of accommodating the sudden power reduction caused by a reactor trip.

b) To avoid unnecessary reactor trips and to prevent possible damage to plant equipment, another set of plant conditions causes reactor power reductions which may be very fast (reactor power stepbacks) or relatively slow (reactor setbacks). The load control system must be capable of handling these reactor power reductions.

c) Any reactor power reduction is accompanied by a transient increase in the Xe-135 poison load, which must be compensated by withdrawing some of the zone control absorber elements. The capability to perform subsequent reactor power increases may be restricted by the available control reactivity until the Xenon transient passes.

7.5.2.2 Characteristics of Plant Loads

The typical plant loads are as follows:

a) Turbine - Controlled by the turbine-generator controller when the plant is in the "Turbine Leads" mode. When the plant is in the "Reactor Leads" mode, the turbine load is controlled by the steam generator pressure controller (see Section 7.5.3. Hardware unloaders protect the turbine during abnormal conditions.

b) Condenser steam discharge valves (CSDVs) - Normally controlled from SGPC, but can also be controlled manually via the computers. Separate interlock logic trips the CSDVs closed on low condenser vacuum or high steam generator level to protect the condenser and the turbine.

c) Atmospheric steam discharge valves (ASDVs) - Normally controlled from SGPC, but can also be controlled manually via the PDS.

7.5.2.2.1 Effects of Xenon

The ACR reactor is capable of suddenly reducing unit power from 100% full load down to approximately 75% of full load and maintaining that reduced level indefinitely without poisoning-out. However, the subsequent rate of return to full power operation is restricted by available control reactivity, because of the use of zone rods to overcome the buildup of xenon poison.

7.5.2.3 Major Control Functions

The main control programs of the overall plant control function are:

a) Turbine generator control programs - These programs will provide the interface between the turbine generator controller and plant control programs for turbine control and monitoring. In the "Turbine Leads" mode, the turbine load control can be done by the operator entering the target load and loading/unloading rate. This communicates its actions to the turbine generator controller through the steam generator pressure control program.

b) Steam generator pressure control (SGPC) - The steam generator pressure control program controls steam generator pressure to a constant setpoint by changing the reactor power setpoint ("Turbine Leads" mode) or by adjusting the plant loads, including turbine load ("Reactor Leads" mode). SGPC also controls the heat transport system warmup and cooldown by varying the steam pressure control setpoint.

c) Reactor regulating system (RRS) - The reactor power control program monitors various power demands to determine the reactor neutron power setpoint, and adjusts the reactor's reactivity devices to maintain power at that setpoint. The RRS also controls the selection of the plant mode.

All the above major control functions are implemented in the DCS. Digital control was chosen for these functions because the systems are large, complex, and nonlinear. Digital control is flexible, reliable, and easily accommodating of future changes

7.5.2.4 Overall Plant Control Operation

7.5.2.4.1 Normal Operation

Warmup of the HTS is controlled by the steam generator pressure control program from any temperature. The warmup rate is set by the operator. The cooldown proceeds in the same way as warmup until the temperature is below 177°C, at which stage the long term cooling system can take over. During warmup, the reactor power is adjusted according to steam generator pressure error, as in the "Turbine Leads" mode, but uses a feed forward term based on the desired temperature rate instead of the turbine load. Alternatively, the operator can place the setpoint in the "Reactor Leads" mode and request a steady reactor power level known to give approximately the rate of warmup desired.

Cooldown proceeds in much the same way, except that reactor power is not involved. The reactor is shut down when cooldown is initiated. Cooldown would normally make use of the condenser steam discharge valves. The discharge capacity of the valves is approximately proportional to steam generator pressure and, as this pressure decreases during cooldown, progressively larger valve openings are required to maintain a given temperature rate. If the main condenser is unavailable, cooldown is possible via the atmospheric steam discharge valves, at a rate limited by the capacity of these valves.

In the low log power ranges, the reactor power setpoint cannot be controlled from the steam generator pressure, because even a very large relative change in the reactor power will have little or no effect on steam generator pressure. In this range, reactor power calculation by RRS is based upon the measurements of neutron flux by the fission chambers. Steam generator pressure is controlled by the ASDVs and CSDVs.

In the "Reactor Leads" mode of operation where the plant as a "base load" power source, reactor power is controlled to a setpoint supplied by the operator. The steam generator pressure control program then manipulates the plant loads to keep steam drum pressure constant.

In the "Turbine Leads" mode at-power operation of the unit, the generator load is adjusted by suitably positioning the turbine load setpoint. The reactor power is raised or lowered to maintain steam generator pressure at its setpoint, and therefore follows generator load changes.

The turbine-generator controller changes the generator load in response to requests from the local operator or from a remote load control centre, and thereafter maintains the load at the desired setpoint except in cases of grid frequency upsets, when the action of the turbine speed governor prevails. The nuclear steam supply system will follow such governor initiated load changes through the action of the steam generator pressure controller.

7.5.2.4.2 Abnormal Situation Analysis

This section summarizes plant and control system behaviour during upset conditions.

Reactor Trip

The computer control programs sense initiation of a reactor trip through triplicated contacts and take the following actions:

- Drop control absorber elements,
- Switch control to the "Reactor Leads" mode.

The generator remains connected to the grid system on a reactor trip. The steam generator pressure control program runs back the turbine on the falling steam generator pressure in accordance with its normal pressure control algorithm.

The heat transport system pressure tends to drop sharply due to collapsing voids and shrinking coolant. Pressurizer design ensures adequate pressure on the heat transport system coolant pump suction header.

Reactor Power Stepback

The stepback is a sudden reduction in reactor flux power effected by dropping the eight control absorber elements either fully or partially into the core, and this is done to avoid unnecessary reactor trips or equipment damage in the plant.

Stepbacks terminating at relatively high power levels lead to only a partial insertion of the control absorber elements. A complete DCS failure will effectively cause a stepback too, because the processor watchdog timers fail safe and cause the drop of the control absorber elements into the reactor.

On a stepback, the control mode is also changed to the "Reactor Leads" mode. The turbine is unloaded as necessary by the steam generator pressure control algorithm.

Reactor Power Setback

When a setback occurs, the setback routine issues to the demand power routine a rate at which reactor power is to be reduced. If the setpoint is already being reduced at a greater rate, the setback is ignored.

Should the condition requiring a setback clear before the endpoint of the setback is reached, or if the setback goes to completion, the plant is left in the "Reactor Leads" mode with the setpoint under operator control.

Turbine Trip or Loss of Line

On a turbine trip or loss of line, the DCS causes the immediate opening of the condenser steam discharge valves to a value corresponding to measured reactor power. Subsequently, the steam generator pressure control program uses these valves in conjunction with the atmospheric steam discharge valves to control steam generator pressure. Following a turbine trip or loss of line, a reactor setback to the poison prevent level of 75% is initiated.

This mode of operation can continue indefinitely until turbine operation or grid connection is restored, or a decision is reached to shut down the plant.

If required, the turbine controller initiates a fast turbine runback after a loss of line. The generator continues to supply the station's electric loads.

"Poison Prevent" Operation

"Poison Prevent" refers to operation with the reactor power held artificially high, and steam dumped directly to the condenser. This mode of operation is used during cases of temporary turbine unavailability, to avoid the large Xenon transient that would result from too great a power reduction in reactor power. The level to which reactor power can be reduced without poisoning out depends upon the reactor's operating history. After steady state full power operation, reactor power can be reduced to 75% for a short period then gradually reduced in 10% steps every 5 hours.

Manual Control of Reactor Power Setpoint

The operator has the option at any time of assuming control of the reactor flux power setpoint. He may simply hold power, the automatic result of placing setpoint control in the manual mode, or he may raise or lower the flux power setpoint to a desired value at a desired rate via PDS commands.

Steam generator pressure control in this situation is via the plant loads, as during a setback, after a stepback, or at very low power levels.

If the operator raises reactor power beyond the capability of plant loads at that time, a reactor power setback on high steam generator pressure restores the power balance.

Loss of Class IV Power

A total loss of Class IV power with the unit at full load has the following effects:

a) The heat transport system pumps become unavailable and the reactor is tripped. Circulation through the core and the steam generators is by thermosyphoning after the pumps run down.

b) When the pump breakers open, a stepback to low power is initiated. A reactor trip will also occur (for example, a low flow signal or a high system pressure signal).

c) The main feedwater pumps become unavailable. Feedwater flow to the steam generator stops until the Class III auxiliary feed pump becomes available.

d) The cooling water pumps for the main condenser become unavailable. The condenser steam discharge valves will be unloaded or inhibited from opening as condenser vacuum deteriorates. The turbine is similarly unloaded. Steam generator pressure will rise because of the power mismatch, and the atmospheric steam discharge valves and the main steam safety valves will open.

Low Condenser Vacuum

The condenser is the ultimate heat sink for both the normal (turbine generator) and backup (condenser steam discharge valves) loads. Maintaining condenser vacuum (by maintaining steam to the turbine gland seals and condenser air extraction ejectors) during upset conditions becomes important because re-establishing vacuum is a time-consuming procedure, which may lead to a reactor poison out.

Condenser vacuum degradation is generally expected to be sufficiently slow for the reactor power to follow the unloading of the turbine. In the "Turbine Leads" mode the reactor power will follow the turbine power down by the action of the steam generator pressure controller. In the "Reactor Leads" mode, steam generator pressure will rise, initiating a reactor power setback on high steam generator pressure. There is no direct setback on low condenser vacuum.

In the event of a sudden loss of condenser vacuum (condenser steam discharge valves close) that unloads the turbine faster than reactor power can be reduced by a setback, a load mismatch builds up between the turbine and reactor power. Initially the atmospheric steam discharge valves absorb the power mismatch, but once the capacity of these valves is exceeded, steam generator pressure will rise until the safety valves lift. The setback on high steam generator pressure will reduce reactor power.

Grid Frequency Upset

a) High Frequency

This is a partial loss of load case and leads to system behaviour similar to, but less severe than, a loss of line. The turbine governing system closes the governor valve, and the steam generator pressure control program bypasses excess steam to the condenser. The reduced steam flow to the turbine and high steam generator pressure will reduce the reactor power setpoint to match the reduced load, if the unit is operating in the "Turbine Leads" mode. In the "Reactor Leads" mode, the CSDVs and/or the ASDVs will open, and high steam pressure will reduce reactor power via a setback.

The plant can withstand any size of load rejection.

b) Low Frequency

This is a partial loss of generation case. The turbine-generator control program opens the governor valves and admits more steam to the turbine. The increased steam flow and reduced steam generator pressure cause reactor power to increase in order to meet the extra demand if the unit is operating in the "Turbine Leads" mode. In the "Reactor Leads" mode, the SGPC program actions will reverse the governor action and return turbine load to its original value.

High Steam Generator Level

On high steam generator level, the turbine is tripped to avoid turbine damage due to carryover of water. The condenser steam discharge valves are also tripped closed on high steam generator

level, but above the level at which the turbine is tripped. A setback to 75% on turbine trip is initiated if the power initially exceeds 75%.

When the turbine and condenser steam discharge valves are tripped on high steam generator level, the steam generator safety valves lift, and the reactor is set back on high steam generator pressure.

Low Steam Generator Level (Loss of Feedwater)

The steam generators are the reactor's primary heat sink. On loss of feedwater to the steam generators, it is important that the reactor be shut down while there is still sufficient inventory in the steam generators to allow the operator enough time to provide an alternative heat sink. A stepback on low steam generator level serves this purpose.

Heat Transport Pump Trip

The loss of one heat transport pump causes a reactor power stepback. This incident could also result in a reactor trip depending on the number and disposition of pumps tripped, operating conditions at the time of the pump trip (reactor power level), and state of the fuel (fresh or equilibrium core).

7.5.3 Turbine Generator Control

The distributed control system performs control and monitoring functions for the reactor, balance of plant, turbine-generator, and switchyard, among other things. The turbine control and monitoring is performed by the turbine control programs in DCS and the electro-hydraulic controller (EHC).

The turbine-generator control is described in Chapter 10 in detail.

7.5.4 Steam Generator Pressure and Level Control

7.5.4.1 Steam Generator Pressure Control Program (SGPC)

The steam generator pressure control program has two main functions:

- To control the warmup or cooldown of the heat transport system at a specified, constant temperature rate by changing the SG pressure setpoint at the appropriate rate.
- Once warmup is complete, to maintain steam generator pressure at a fixed setpoint under all circumstances.

During "Turbine Leads" at-power operation or in a special automatic warmup mode, SGPC adjusts the reactor power setpoint to maintain SG pressure at its setpoint. If the SG pressure error for any reason exceeds a defined offset, SGPC opens the steam discharge valves (SDVs) relieve the excess steam.

During "Reactor Leads" operation or abnormal conditions at high power, the reactor power setpoint is controlled by the operator, or by some automatic derating condition, and SGPC controls SG pressure by adjusting the condenser steam discharge valves (CSDVs) opening or the turbine load setting (if the turbine is operating).

SGPC must also cope with the following severe disturbances:

a) During reactor trips or stepbacks, SGPC must reduce the turbine load quickly to prevent steam generator pressure from dropping excessively.

b) During turbine trips or fast runbacks, SGPC must open the CSDVs very quickly to prevent steam generator pressure from rising to the safety relief valve setting.

SGPC also monitors main condenser vacuum, and limits the CSDV opening if vacuum is degraded.

7.5.4.2 Steam Generator Level Control Program (SGLC)

The purpose of the steam generator level control (SGLC) program is to maintain the water and steam interface at or near a specified setpoint in the SG. The major disturbance on the SG level is a change in steam demand and a change in reactor power. The SG level control system attempts to maintain roughly constant steam generator inventory rather than SG level. This approach makes use of shrink and swell calculated by the DCS as a feed forward term to maintain better stability during large power changes. This results in a level control which varies with steam generator power. This arrangement has the advantage of providing a considerable range of level within the safe high and low level limits.

SGLC is a proportional + integral controller with an automatically-calculated power-dependent set point. Its control algorithm also includes the following terms:

- Steam & FW Flow term – depends on differential between steam flow & FW flow
- Swell term – depends on rate of change of power
- Feedforward term – depends upon reactor power

7.5.5 HTS Pressure and Inventory Control

The heat transport system, which carries the heat generated in the reactor core to the steam generators, is a pressurized light water closed loop. The pressure and inventory control system (P&IC) is used to provide a reliable means of controlling pressure and inventory for this loop, as well as to provide adequate overpressure protection for the HTS. The control of the pressure and inventory is achieved using the DCS. The design requirements and system description on the process aspects of P&IC are described in Section 5.2.3 in detail.

Under normal operating conditions, the pressurizer is the principal component in the pressure control of the HTS. It is a pressure vessel that is partly full of liquid water with the remainder being saturated vapour in equilibrium with the liquid. The normal operating conditions in the

pressurizer are such that the reactor outlet headers are maintained at desired pressure and temperature.

At low reactor powers the pressurizer may be isolated from the HTS by closing the motorized valve that is normally open to connect HTS to the pressurizer. In this case, the pressure of the HTS measured at the reactor outlet headers is controlled by adjusting the feed and bleed flows in and out of the HTS.

Inventory control of the HTS is achieved by feed and bleed of the water flow in and out of the HTS. With the pressurizer connected to the HTS in 'normal mode', the inventory control is performed by controlling the pressurizer level at the desired setpoint. The DCS calculates the demanded lift of the feed and bleed valves.

7.5.6 Core Monitoring Instrumentation

7.5.6.1 Channel Flow Verification (CFV)

The purpose of CFV is to confirm that flows within each channel are within the range of expected values for that channel.

There is an extensive commissioning program before criticality to confirm that individual channel flows also are within predicted limits and that any foreign objects in the HTS are found and removed. This program includes initial ultrasonic measurement of all channel flows.

During high power commissioning, process measurements are taken and analysed to confirm more precisely that channel flows are within predicted values.

Thereafter, CFV focuses on circumstances where the HTS is or may have been opened and foreign objects may be impeding flows:

- After fuelling (one channel opened): flows in that channel are confirmed from the fuelling machine ΔP.
- After reactor shutdown (when HTS circuit may have been opened): during the return to full power (at, about 75% FP), flows in all channels are confirmed by the channel temperature monitoring system (CTM) (see Section 7.5.6.2).

7.5.6.2 Channel Temperature Monitoring System

The channel temperature monitoring (CTM) system is designed to measure the outlet temperatures of all (292) reactor channels, sequentially scan these temperature measurements, provide alarm annunciation on the PDS VDU and printout for out-of-limit measurements, and provide a printout map of all channel temperatures on operator demand.

7.5.6.3 Fuelling Machine Differential Pressure Measurement System

The fuelling machine differential pressure (FMDP) system is used to detect the presence of a flow restriction in a channel in the following circumstances:

a) The CTM system is non-functional, which may occur at very low power (< 10% FP) where there is an insignificant temperature rise along the channel, and also at very high powers (> 75% FP) when the coolant is under saturated conditions and the RTD no longer responds to channel power increases or flow decreases;

b) As a result of refuelling whether at zero power or at full power;

c) Following HTS maintenance, with an RTD failed on that channel.

The system is designed to enable the operators to infer the absence of a flow restriction in a fuel channel. The system provides automatic annunciation on the fuel handling display system and also provides a printout for out-of-limit measurements.

The FMDP program uses a measurement of the fuel channel differential pressure (DP) obtained from a transmitter measuring the pressure in the two fuelling machines (magazine-to-magazine), connected to opposite ends of the same channel.

The DP is checked against the reference DP for the corresponding fuelling machine configuration, and an alarm is recorded if the change in DP is outside acceptable limits. These limits are set to allow for the expected increase in channel DP due to the presence of fresh fuel and changes in bundle alignment.

7.5.6.4 Failed Fuel Detection and Location Systems

7.5.6.4.1 Gaseous Fission Product Monitoring System

The gaseous fission product (GFP) monitoring system is required to determine the activity concentrations of selected fission products in the HTS. Liquid samples extracted from the HTS at the heat transport pump discharge, flow through physically adjacent sample holders and then return to the HTS at the steam generator inlets. The sample from the HTS is monitored using a gamma analyser and data processor to detect isotopes emitted from the defective fuel. The location of the defective fuel can then be identified by the failed fuel location system.

7.5.6.4.2 Failed Fuel Location System

The failed fuel location system assists in identifying the fuel channel which contains the failed fuel and to determine when the failed fuel has been removed by subsequent refuelling operations. This system is used in conjunction with the GFP monitoring system discussed in Section 7.5.6.4.1.

7.5.6.5 Annulus Gas System

The recirculating annulus gas system provides a means for detection and identification of a leaking pressure tube and/or calandria tube. The pressure, purge humidity, and moisture content of the annulus gas are monitored and displayed on demand on the PDS in the MCR. High and low pressure, high temperature, high humidity, and low flow of the annulus gas system are alarmed in the MCR for operator's action. The system description and design requirements are given in Section 9.5.5.

7.5.7 Process Instrumentation - General

The process instrumentation for the nuclear steam system is designed to provide reliable control and monitoring of the process plant. The latest technological advances are used to achieve a high degree of reliability and availability, and to ensure safety of both the plant personnel and the general public. Sufficient automation is provided to ensure safe, reliable, and economical operation. Control stations and visual indicators associated with safe and reliable operation of the plant are located in the main control room. Other controls and indicators are located, as necessary, elsewhere in the plant.

Wiring and cabling practices segregate conductors carrying appreciable AC or DC power, or unsuppressed inductive noise due to switching loads, from signal cables. Ground loops are avoided by ensuring that only one ground is allowed on a signal circuit. Suitable isolation (buffering) devices are used for signal isolation to meet the channel separation requirements.

Standard industrial instruments and materials of suitable types are used in general. Special materials, treatments, finishes, and dust-tight and air-conditioned enclosures are employed where necessary. The minimum number of different types of instruments are used in order to achieve economy in maintenance. Instrumentation and control system circuitry is designed to avoid, as far as possible, the need for shutting down the reactor in order to perform necessary operational checks on control and instrumentation components.

The triple or dual redundant schemes allow each channel to be tested and maintained, if necessary, without interfering with normal plant operation.

Temperature sensors are generally of the platinum resistance type and where practicable are used with protecting wells. All protecting wells are designed taking into consideration pressure, temperature, and possible vibration from the flowing fluid. Flow detectors are venturis, nozzles and orifices. Instruments involving moving parts, such as variable area flow meters, are restricted to low flow measurements where an orifice or nozzle will not suffice. Control valves are generally pneumatic diaphragm type valves.

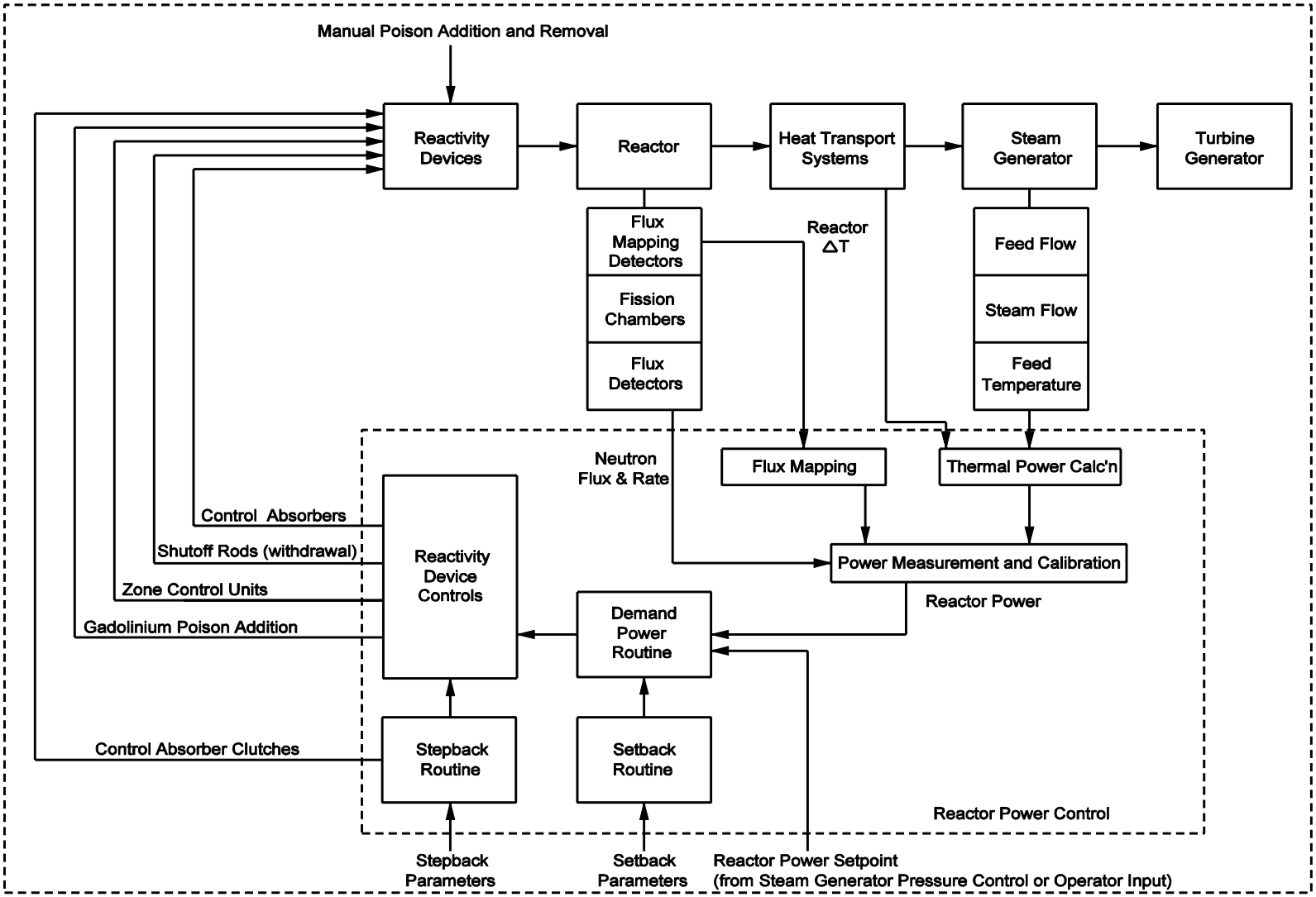

Figure 7.5-1 Reactor Regulating System Block Diagram

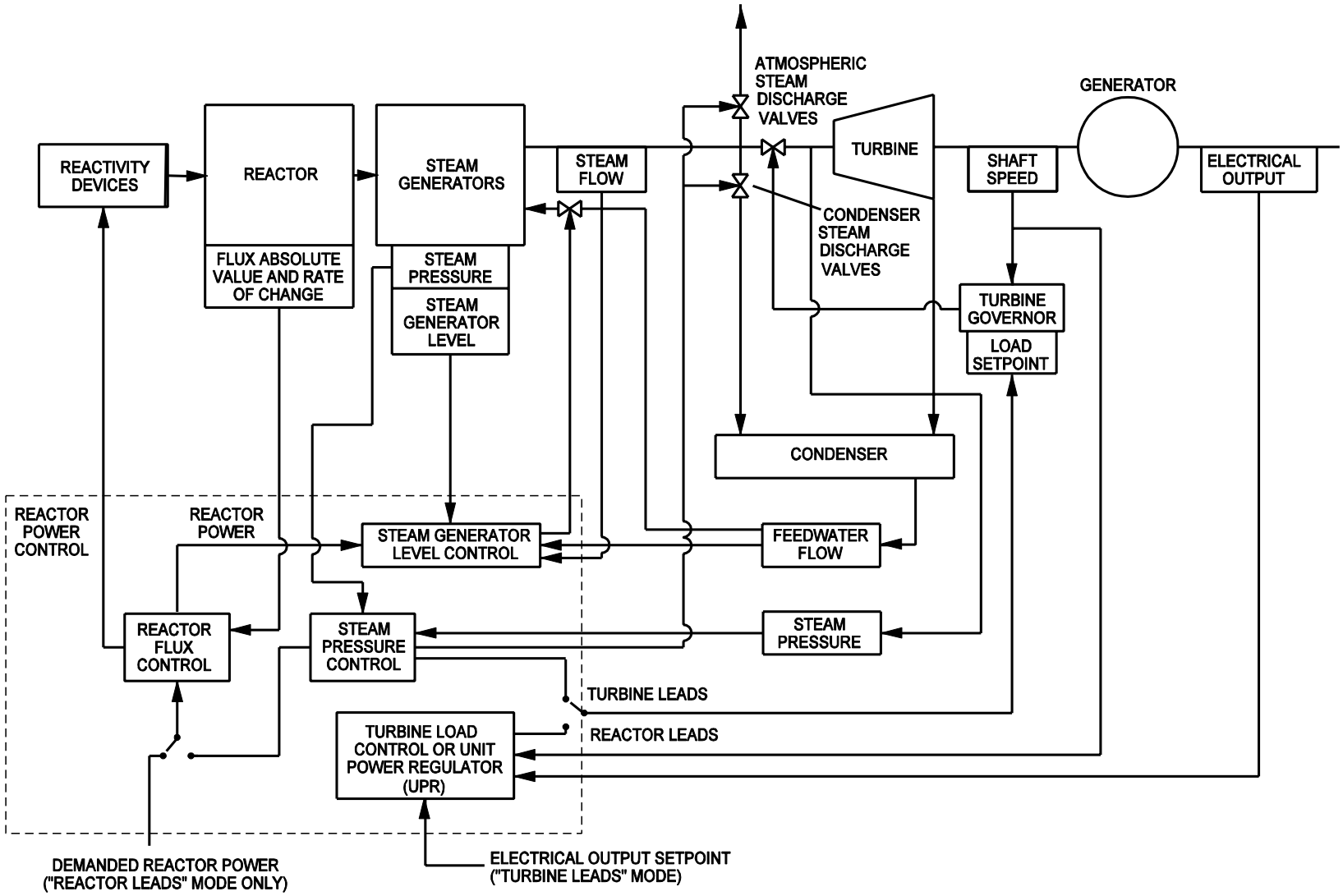

Figure 7.5-2 Overall Plant Control Block Diagram

7.6 Control Areas and Control Computers

7.6.1 Main Control Area

The main control area is a facility serving two generating units, and any common equipment. The layout shown in Figure 3.4-1 can accommodate shared or separated main control rooms. It is comprised of the following:

- The MCR, containing the human-system interfaces (HSI) for both units, common systems, and the on-power fuel-handling systems. It also houses a shift supervision office, a planning area, a lunchroom, and washroom facilities for the MCR occupants.
- A work control area (WCA) for the issuance of permits for plant maintenance activities and the associated records and drawings.
- Office space for the MCR support administration personnel.
- A technical support centre (TSC) used in the management of incidents affecting the safety of the plant.
- A security desk to control access into the MCR.

All controls, alarms, and indications needed to initiate, monitor, and control reactor shutdown, HTS cooldown, and long term cooling are available from either the plant display system (PDS) or the appropriate panels in the MCR.

7.6.1.1 Main Control Room

The control room instrumentation is based on the philosophy of having sufficient information displayed to allow the unit to be controlled safely from the control room. Figure 7.6-1 shows a conceptual view of the ACR main control room.

In case the MCR becomes uninhabitable or unuseable, enough display and control instrumentation is provided at a location remote from the MCR (specifically, the secondary control area; see Section 7.6.2) to allow the plant to be shut down and maintained in a safe shutdown condition.

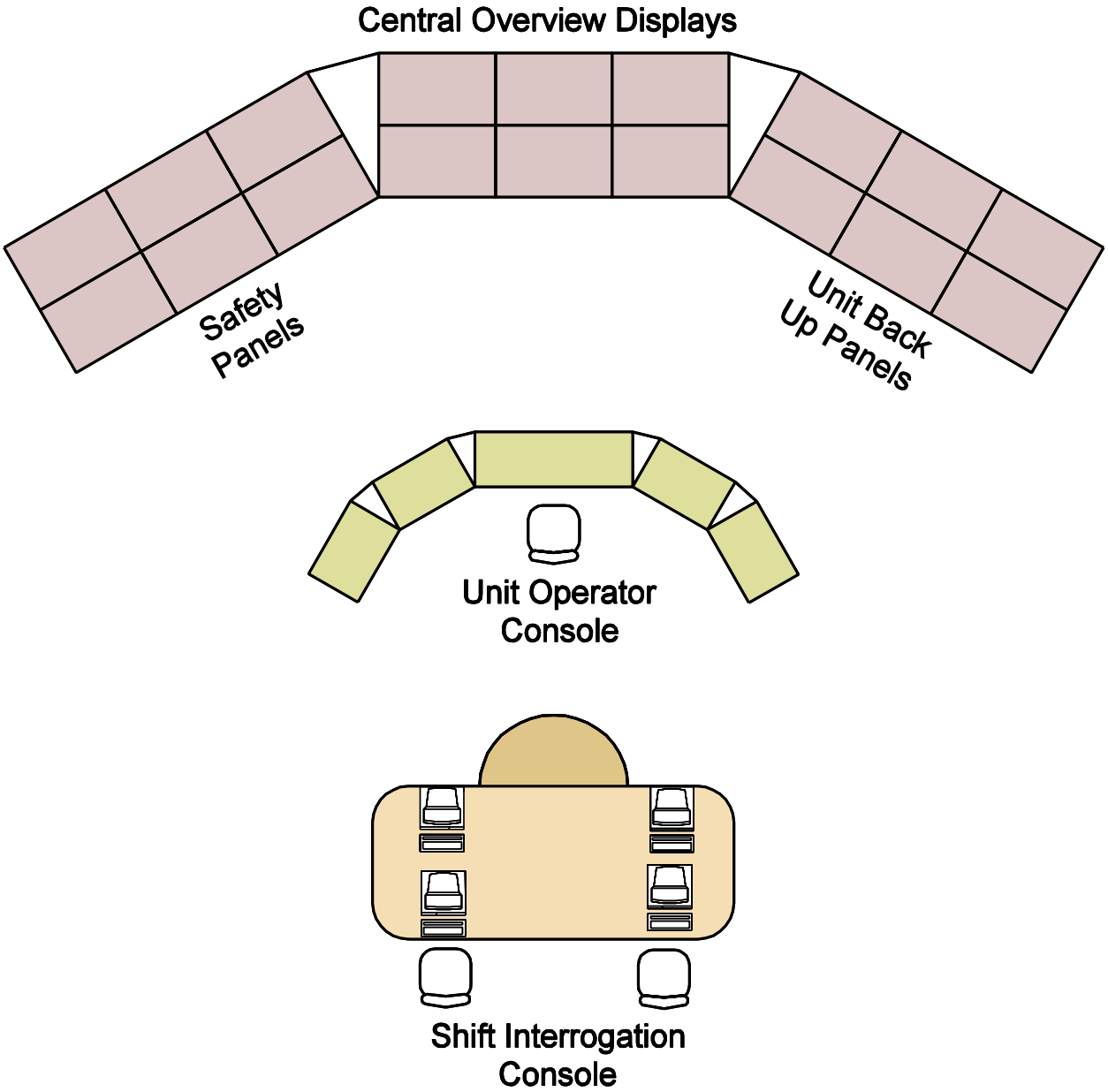

Figure 7.6-1 ACR Main Control Room Concept

7.6.1.2 The Human-System Interfaces (HSIs)

Each of the unit HSIs include the following features:

- The HSI for each generating unit comprises a console for normal plant operating functions, minimum height control panels, and large screen displays.
- The design intent is to provide a compatible HSI for both nuclear plant and balance of plant. The primary HSI for both information display and control input will be a plant display system (PDS) using video display units (VDU) and context (task) sensitive keyboards, respectively. The PDS will be the normal interface for all activities relating to the operation of the plant process control systems. Large screen displays will be used to provide the operators with plant overview information in support of maintaining operators' situation awareness.
- The primary interface for the plant safety systems will be located on control panels and will be a combination of both VDU and hardware based information displays and controls. Testing of safety systems will normally be conducted via the safety system monitoring and testing console VDUs.
- A secondary interface, for plant process information and controls that would be required for heat sink maintenance and asset protection in the event of a failure of the PDS, will be located on control panels again using a combination of both VDU and hardware based information displays and controls. These would be interfaced to the distributed control system (DCS), and via direct wired connections respectively.
- Alarm annunciation will be presented by VDU and hardware based methods.
- The interface for the fuel-handling systems will use a similar approach for information display and controls.

7.6.1.3 Graphic Displays

The PDS computers make extensive use of computer-driven graphical displays. This equipment replaces many of the meters and recorders normally found on conventional panels. The use of computer-driven displays results in less congested panels and allows easier correlation of information. The greater flexibility possible with graphic displays is of considerable use during commissioning and at other times when special display requirements must be met.

7.6.1.4 Alarm Annunciation

The plant display system (PDS) provides a central annunciation capability. The central annunciation displays provide two distinct displays: a fault alarm display and a status alarm display. The fault display presents alarms to the operator, which represents a process parameter or system condition, which is abnormal for the current plant operating region or state.

PDS also provides, at any display station, an annunciation interrogation capability. With this capability, all alarms can be viewed, sorted, filtered, additional alarm information can be obtained, and alarm lists can be printed. This interrogation capability allows the operator to perform alarm analysis and diagnostics as required to meet their current situational requirements.

Alarm windows for all alarm conditions required in the event of a PDS and/or DCS failure are located on the control panels. The alarm windows are driven independently of the PDS computers. Where multiple trip signals have resulted in the lighting of an alarm window, the operator can determine which trips or devices are involved by viewing the other indicators on the panel.

7.6.2 Secondary Control Area

A secondary control area (SCA) serves the functions of control, cooldown, and containment in the event of incapacity of the MCR functionality. The SCA is located a sufficient distance from the MCR to prevent any common-mode failure of both facilities. The SCA includes the following:

- The capability of shutting down, maintaining adequate cooling, and initiating containment for an operating reactor.
- Information sufficient to determine the condition of the nuclear processes.
- Controls and information displays for designated critical systems.
- Facilities for occupation by station personnel and materials necessary for the management of the nuclear plant until functionality in the MCR can be restored.

The SCA has several panels and contains controls and indications for reactor shutdown and monitoring of heat sinks, electrical controls required for plant shutdown, and critical safety parameter monitoring. The SCA is electrically buffered from the MCR so failures occurring in the MCR will not interfere with control and monitoring of safety related systems from the SCA.

The instrumentation and control components, including panels and cabinets, shall be seismically qualified to DBE Category ‘B’.

7.6.3 Control Computers

7.6.3.1 Plant Process Instrumentation and Control

The non-safety system plant instrumentation signals are scanned by the distributed control system and transmitted to the plant display system for display to the operator in the main control room. Binary and analog control logic for motors, valves and other control actuators is implemented in programmable control processors in the distributed control system. Operator commands are entered via the plant display system or via remote manual control entry devices installed on the control panels. Use of the distributed control system and the plant display system eliminates the need for relay logic and single-loop analog controllers, as used in previous

CANDU plants. Figure 7.6-2 shows the general configuration of the plant control and display systems.

The supervisory control functions (e.g. entry of setpoints, maneuvering rates) are similar to those in previous CANDU designs, and are carried out via the plant display system. Most alarms, including those from the safety systems, are displayed via the plant display system. A number of annunciation windows are provided for key alarms. A large panel display provides an overview of the safety state of the plant. The coordination of reactor power with turbine-generator load demands is handled by the overall plant control system.

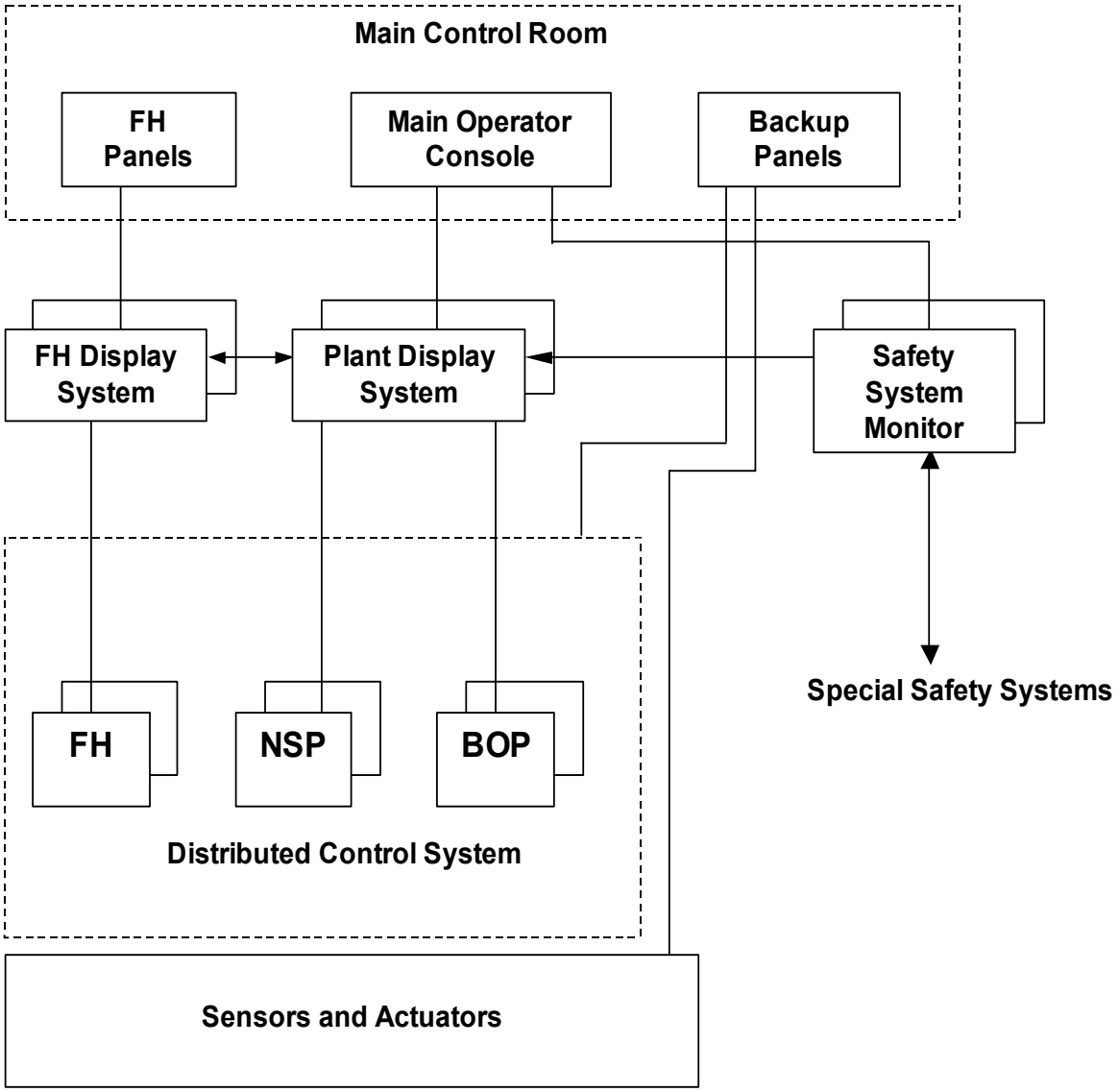

Figure 7.6-2 Plant Control and Display Systems

7.6.3.1.1 Distributed Control System (DCS)

Most of the process control functions are implemented by the distributed control system. In addition to implementing process control functions, the distributed control system provides data acquisition for the monitoring, alarm annunciation, display, and data recording functions performed by the plant display system. The distributed control system also receives and executes operator commands entered via the plant display system.

The distributed control system is a modular digital control system, which uses a number of programmable digital controllers connected to data communication networks that have been designed to provide very high reliability and data security. The system includes comprehensive fault detection, redundancy, and switchover features, to provide a very high degree of immunity to random component failures. Control functions are implemented by programs in small, powerful processor modules. The processors are programmed using control function block diagrams.

Figure 7.6-3 shows the general configuration of the nuclear steam plant (NSP) portion of the distributed control system. The distributed control system is divided into a number of independent functional partitions. This functional partitioning provides a defence against common-mode faults.

Figure 7.6-4 gives a more detailed view of one typical partition. Each partition contains dual-redundant group controllers and/or device controllers, which are linked to channelized input/output racks by a dual-redundant communication network dedicated to that partition. Most of the input/output racks are located remote from the main control center, close to the equipment being monitored or controlled. Each partition is linked to the plant display system using another dual-redundant communication network and dual-redundant gateway computers.

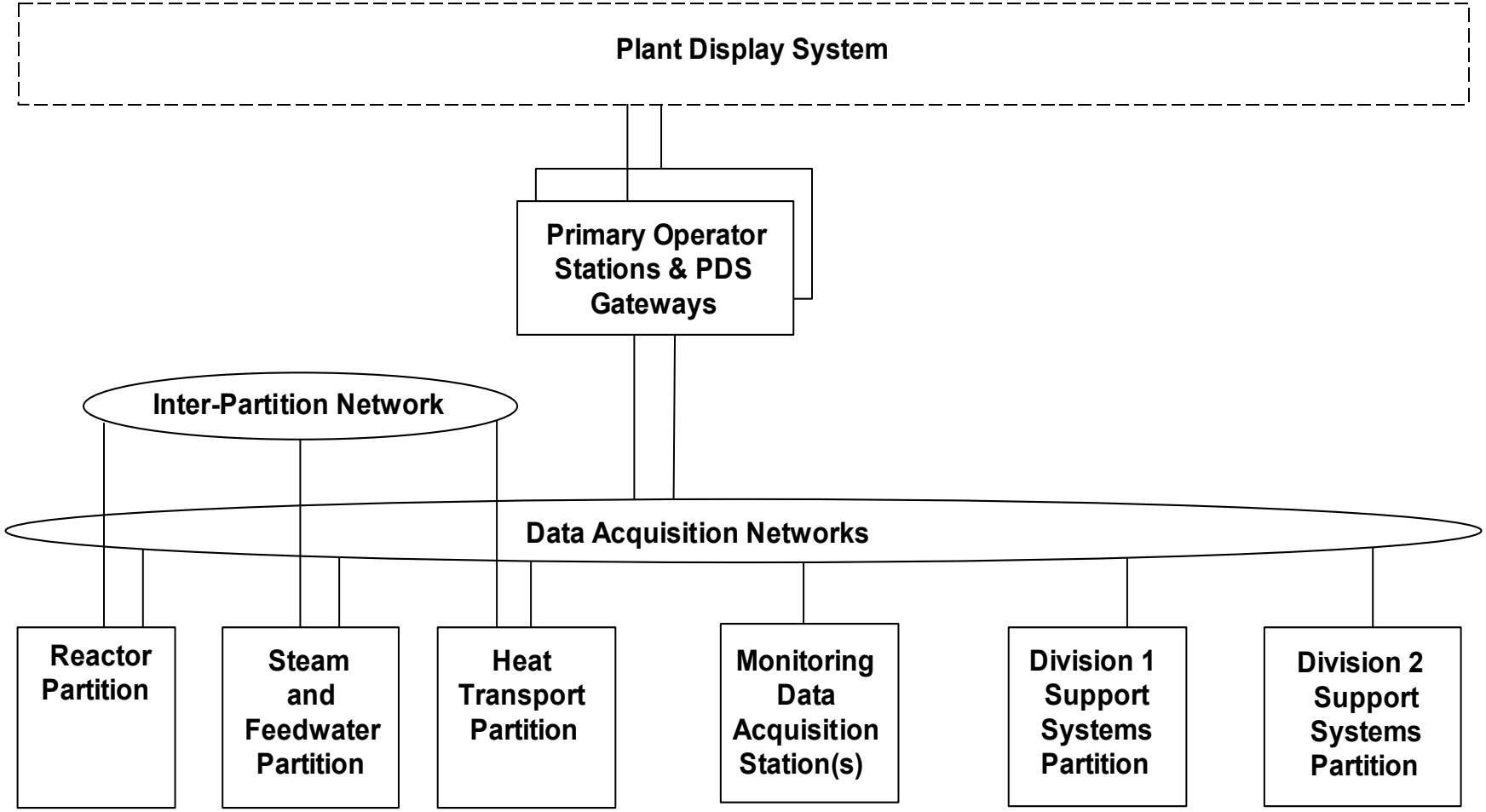

Figure 7.6-3 Overview of NSP Distributed Control System

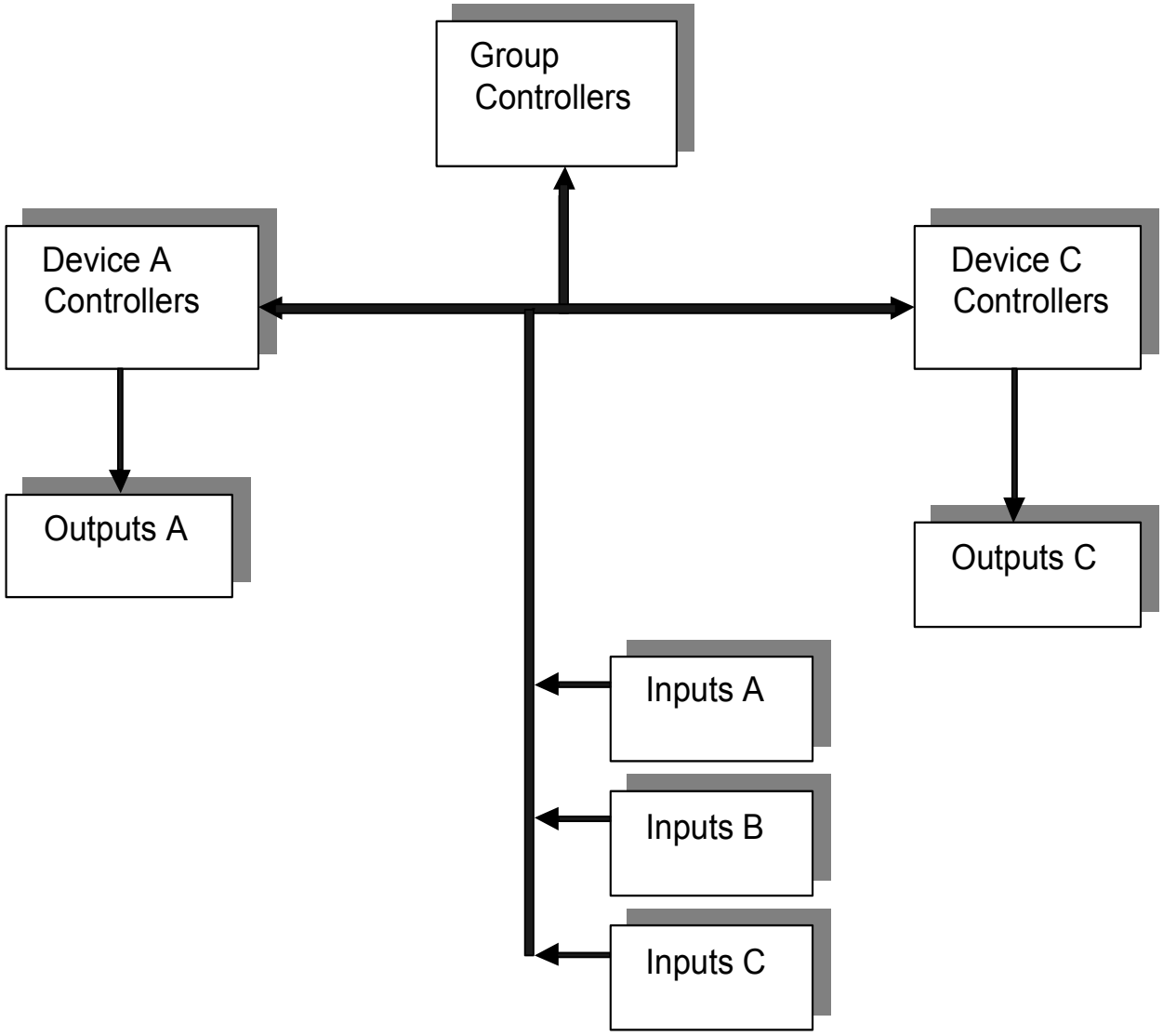

Figure 7.6-4 Typical DCS Partition

The DCS uses two types of controllers. Channelized "device controllers" are used to implement simple control logic for individual process devices such as reactivity control units, valves, and pumps. Unchannelized "group controllers" implement higher level control logic for groups of process devices or for complex control functions. The group control functions are as follows:

- Reactor regulation, including setback but excluding stepback, which is implemented as a separate device control function for improved reliability;
- Moderator temperature control,
- Heat transport system pressure and inventory control,
- Steam generator level and pressure control,

- Unit power regulation.

Control commands from the group controllers are transmitted to the device controllers, which handle the task of issuing the outputs to control actuators.

The equipment selected for use in the distributed control system, and the configuration of the system components, incorporate numerous features that enhance the reliability of the system. For example, the communication networks are either intrinsically fibre-optic based, or use optical isolation, to provide protection against possible cross-linked faults between different partitions or between different processors in the same partition.

7.6.3.1.2 Plant Display System (PDS)

The PDS is the main operator interface in the main control room and provides a real-time and historical display and annunciation system designed to assist in station operations. The system contains the hardware and software required to provide the operators with both generic displays of plant information as well as advanced alarm annunciation features, based on the computerised annunciation message list system (CAMLS). The PDS consists of a collection of human system interface (HSI) stations comprised of VDU device(s), operator input device(s) and hard copy devices.

When available, the PDS will be the primary source for operator information used to operate the plant. The PDS will normally be used at all times. Manual control via the PDS will be used for:

- Supervisory setpoint adjustments previously handled by the DCCs on other CANDUs;
- Device control previously handled by panel handswitches, pushbuttons, etc.;
- Control and testing of certain equipment.

The PDS includes operator selectable displays that are specifically configured for the supplemental PDS application. The operator selectable displays in the display suite include the following:

- Process monitoring displays
    - Provide operators with information related to overall plant and system state, and
    - Integrate information based on the functional goals of the systems.
- Alarm interrogation displays
    - Provide lists of alarms (fault alarms, status alarms, and combined history),
    - Permit the sorting and filtering of the lists based on identified operator tasks, and
    - Permit the display of attributes and associated reference information for specific alarms.

Operator selection of displays is performed through the display navigation function keypad. It is also possible to navigate to displays or pop-up dialogue boxes and the set of navigation icons within the process monitoring displays themselves.

The suite of operator selectable displays is a hierarchy of displays intended to support process monitoring. The displays enhance operator monitoring of higher-level information that provides an integrated representation of groups of system parameters. These parameters denote the status, performance, and health of multiple systems to achieve a larger functional purpose.

The historical data capability of the PDS has been configured to 24 hours; the display of historical data, as within any trend display, can be selected by an operator (on-line) to cover various time periods.

Display nodes, available in the MCR and the technical support centre (TSC) are configured to present all of the available PDS displays including the critical safety parameter monitoring display. The display nodes in the TSC has an additional capability to retrieve and store PDS historical data on removable media for subsequent off-line analysis.

As described, the PDS provides a high degree of redundancy in its implementation, which results in a highly reliable and available system.

7.6.4 Safety Related Display Information

7.6.4.1 General

Most of the information about the state of the plant is presented to the operator directly via the PDS computers. This includes the data logging, sequence of events functions, displays of plant variables, and initiation of most alarms.

The computer system fails safe in the sense that the reactor shuts down on DCS failures. However, the operator may be deprived of the normal source of most of this information.

Information important to the safety of the plant must be available to the operator at all times so that reliance is not placed solely on the DCS or PDS. This information includes the status of all the safety systems and sufficient information about the status of the plant to enable the operator to establish the existence, nature, and extent of an accident, and to allow the operator to intervene intelligently, where necessary, with manual actions.

This objective is achieved by displaying, to the operator, the following information on the control room panels:

- Red alarm windows to indicate the tripped state of any parameter in any of SDS1, SDS2, ECI, or containment.
- Other alarm windows to indicate abnormalities in the shutdown and safety related systems, such as loss of power and loss of helium pressure.
- The values of each trip parameter in each channel of SDS1, SDS2, ECI, and containment.

- Alarm windows to indicate the existence of DCS failures.
- Process indicators to display information on the status of subsystems required for the operation of the safety systems, and other safety related systems such as the reserve water tank.

The functional capability to perform the safety functions after an accident is available in the secondary control area (see Section 7.6.2 for details).

The technical support centre is provided for the effective assessment of an emergency situation, and to provide support to the operator without undue interference with the control room activities.

As a support to operations personnel in the TSC, PDS nodes are provided. From these PDS nodes, all PDS displays can be viewed including the critical safety parameter monitoring display. Displayed information includes both current and historical information. For off-line analysis and diagnosis, historical information can be extracted from the on-line system to off-line media.

7.6.4.2 Safety System Monitor Computer System (SSM)

The safety system monitor computer system (SSM) will be configured to perform the following functions:

a) Perform status monitoring functions for all the Safety Systems via their respective test computers (TCs). The monitoring functions will include display of all the relevant internal states of all the safety systems through operator interface VDUs at the respective MCR and SCA panels. Appropriate alarm detection mechanisms and alarm annunciation displays will be supported. The SSM is also capable of inter-channel and inter-system signal comparison and analysis to validate measurements and detect abnormal conditions.

b) Provide full range of safety system realtime database repository services. These services include supports for:

   1) Status display update functions,

   2) Operator interrogation of the system states and histories,

   3) System selfcheck functions, and

   4) Safety System data export to the PDS.

c) Provide operator interface and the necessary software/hardware implementation to interface with the trip computers via the test computers (TCs), to perform all interaction functions between the trip computer and the operators. These functions include safety system calibration, setpoint change and watchdog test, among other things.

d) Provide operator interfaces to perform regular, automated, safety system testing of all the safety systems through the TCs.

e) Support appropriate physical and functional separation with appropriate components distributed between the MCR and the SCA.

7.6.4.3 Post Accident Management

7.6.4.3.1 Introduction

When an accident occurs, the initial protecting and mitigating actions are to be performed automatically. As the accident progresses, the operator will tend to have an increasing role in managing the outcome of the event.

Post-accident management provides information that enables the operator to do the following:

a) Assess the post-accident conditions of the plant and determine the nature and course of the accident;

b) Determine whether or not the safety related systems have performed or are performing their required protective actions;

c) Monitor the plant characteristics required to follow the effects of the accident;

d) Determine the appropriate actions that need to be performed and monitor the results of these actions, including the need to initiate the off-site emergency procedures.

Post-accident management is not a system as such, but a process to ensure that the instrumentation required for the above purposes is systematically identified and meets specified requirements. This requires the identification of the following:

a) The events for which post-accident management may be required;

b) The safety related system and variables needed for operator actions that may be required after these design-basis events;

c) The locations, types, ranges, qualification, and other requirements for this instrumentation;

d) Procedures to ensure that the instrumentation to be used for post-accident management is readily identifiable in the control rooms.

7.6.4.3.2 Requirements

Post-accident information assists the operator in assessing the post-accident plant conditions. The instrumentation provided shall assist the operator in carrying out the following functions:

a) Verification of reactor shutdown;

b) Verification of reactor heat removal;

c) Verification of the provision of a physical barrier to release of radioactivity to the environment; and

d) Monitoring of plant characteristics required to follow the effects of the accident.

7.6.4.3.3 Information Display

a) Redundant, qualified information chains are provided for each variable to be monitored.

b) Post-accident management (PAM) information displays are primarily selected from control panel instrumentation. PDS and SSM displays of PAM information may be used if they have sufficient reliability and are seismically qualified.

c) PAM display instrumentation will be uniquely identified like by use of colour-coding is provided for bezels around panel meters and status indicators designated for post-accident monitoring.

TABLE OF CONTENTS

SECTION **PAGE**

8. ELECTRICAL POWER SYSTEMS 8-1

8.1 Overall Design Basis Criteria 8-1
8.2 Power Classification 8-1
8.3 Redundancy 8-2
8.4 Offsite Power System 8-2
8.4.1 System Functions 8-3
8.4.2 High Voltage Grid Switchyard Description 8-3
8.5 Onsite Power System 8-4
8.5.1 22 kV System 8-4
8.5.2 Generator Load-Break Switch* 8-6
8.5.3 Main Output Transformer 8-6
8.5.4 System Service Transformer 8-7
8.5.5 Unit Service Transformer 8-7
8.6 Normal Power Sources 8-8
8.6.1 General 8-8
8.6.2 Transfer Systems 8-8
8.6.3 Electrical Power System Station Services 8-9
8.6.4 Electric Circuit Protection Systems 8-9
8.7 Diesel-Generator 8-10
8.7.1 General 8-10
8.7.2 Diesel-Generator Protection 8-10
8.7.3 Fuel System 8-11
8.7.4 Starting System 8-11
8.7.5 Lubrication System 8-11
8.7.6 Cooling Water System 8-11
8.7.7 Combustion Air and Exhaust System 8-12
8.7.8 Periodic Testing and Synchronization 8-12
8.8 Unit Service Distribution 8-12
8.8.1 13.8 kV, 4.16 kV (Typical) Distribution 8-12
8.8.1.1 13.8 kV, 4.16 kV Switchgear 8-12
8.8.1.2 Medium Voltage Grounding System 8-13
8.8.2 Secondary Distribution 8-13
8.8.2.1 General 8-14
8.8.2.2 600 V Switchgear 8-14
8.8.2.3 600 V Motor Control Centres 8-15
8.8.2.4 600/120 V Supply Class III and Class IV 8-15
8.8.2.5 208/120 V Class III Supply 8-15
8.9 Uninterruptible Power Supplies 8-16
8.9.1 Uninterruptible Class II Supplies 8-16
8.9.2 Uninterruptible Class I Direct Current Supplies 8-16
8.10 Motors 8-17

TABLE OF CONTENTS

SECTION **PAGE**

8.10.1 Medium Voltage Motors 8-17
8.10.2 575 V Motors 8-18
8.11 Tests for Electrical Equipment 8-18
8.12 Lighting 8-18
8.13 Cabling System 8-19
8.13.1 Introduction 8-19
8.13.2 Power Cables 8-19
8.13.3 Control and Instrumentation Cables 8-20
8.13.4 Cable Routing and Separation 8-20
8.14 Containment Penetrations 8-20
8.15 Fire Protection for Cable System 8-21
8.16 Auxiliary Electrical System 8-21
8.16.1 Grounding 8-21
8.16.2 Lightning Protection 8-21

8. ELECTRICAL POWER SYSTEMS

8.1 Overall Design Basis Criteria

The performance of the electrical power system in a nuclear plant directly affects the availability of the generating unit and the reliability of the process and control systems. The electrical power system consists of connections to the offsite grid, the main turbine generator and the associated main output system, the onsite non-seismically qualified and seismically qualified standby diesel generators, seismically qualified battery power supplies and uninterruptible power supplies (UPS), and distribution equipment. The system is equipped with the necessary protection and controls and monitoring to enable it to supply electrical energy output to the grid and all loads within the power plant. Equipment and cabling systems distributing power from the seismically qualified standby diesel generators, batteries and the UPS are seismically qualified and environmentally qualified when in areas affected by post-LOCA, post-MSLB environment. Each unit of the ACR-700 plant has a dedicated electrical distribution system with inter-unit ties in the Class III distribution and common standby generators.

The preferred sources of power to the electrical power distribution system are the offsite network during reactor start-up and shutdown and the main turbine generator during all other normal operating conditions.

The description listed in this section is based on the standard North American distribution voltages. Actual design will be for the voltages specific the site of the ACR-700.

8.2 Power Classification

The electric power distribution system (EDS) provides electrical power to all process and instrumentation and control and monitoring loads within the unit. The station service power supplies are classified in order of their levels of availability requirements. Four classes that range from uninterruptible power to that which can be interrupted with limited and acceptable consequences are provided as follows:

Class IV Power Supply: Alternating current power, available from the grid/turbine-generator, serves as the primary power source to the plant. Long-term interruption of Class IV can be tolerated without endangering equipment, personnel or plant safety.

Class III Power Supply: Alternating current supplies to auxiliaries that are necessary for the safe shut down of the reactor and turbine and can tolerate short interruptions (in the order of up to three minutes) in their power supplies. Onsite standby generators provide an alternate power source to the Class III system. Connections between the units' Class III supplies and distribution systems enhance the availability of the standby sources. Portions of the Class III system, including

some standby generators, are seismically qualified to be operational after a design basis earthquake.

Class II Power Supply: Uninterruptible, alternating current supplies for essential auxiliaries, channelized to match the redundancy requirements of station instrumentation and control systems. Class II is available from Class I via inverters and regulated Class III. Class II power is uninterruptible except during transfers between Class I and Class III and during fault conditions. The Class II distribution system is seismically qualified to be operational after a design basis earthquake.

Class I Power Supply: uninterruptible, direct current supplies for essential auxiliaries, available from Class III through rectifiers and onsite batteries. Class I power is uninterruptible, except during fault conditions. Class I is channelized to match the redundancy requirements of control logic and reactor safety circuits. The Class I system is seismically qualified to be operational after a design basis earthquake, except that for the emergency dc loads of the turbine generator.

8.3 Redundancy

The station electrical distribution system is divided into two independent divisions from the highest distribution voltage down through control voltages. These divisions are referred to as the "ODD/EVEN" systems and are separated in all aspects of equipment, distribution and cable routing. The power supplies for the control systems are further divided into three separate and independent channels. These channels are kept completely separate from each other with regard to equipment cabinets, cable trays, conduits, and junction boxes. This ensures redundancy of supply to systems requiring high reliability.

8.4 Offsite Power System

The offsite power network is connected to the station's switchyard via two separate transmission lines (these lines, preferably, are on different rights-of-way). Each of the circuits from the offsite transmission network has the capacity and capability to supply the assigned loads during normal and abnormal operating conditions.

The nuclear generating station should have priority on restoration of power after any grid disturbances leading to a separation of the unit from the grid.

The switchyard may be located so that it can be expanded to serve additional units. The switchyard integrates the power output of an NPP with the high voltage offsite network through connections between the transmission lines and the main output transformers and the system service transformers. The switchyard is of gas insulated switchyard (GIS) type, arranged in a

breaker-and-a-half bus configuration modified to afford a better separation between feeds to the system service transformers of the two units.

The substation is an outdoor steel structure, located close to the power-generating unit.

Conventional outdoor air-insulated line protection is provided for the outgoing transmission lines.

The offsite network provides power to the units during unit's start-up and shutdown. During normal operation, the generated power is transmitted from the unit's generator through the main output transformer trough the switchyard to the high voltage transmission lines and to the unit's loads through the unit service transformer.

8.4.1 System Functions

The basic functions of the switchyard are:

a) To incorporate the power output of the unit(s) into the high voltage power system (grid).
b) To provide switching facilities and interconnections to supply power to the system service transfer.
c) To provide facilities to synchronize and connect each generator to the power system.
d) To provide protection for the detecting and isolating electrical faults within the switchyard and in response to commands from faults detected in the transmission system and the main output and system service transformers

8.4.2 High Voltage Grid Switchyard Description

The substation is an outdoor steel structure and is located close to the generating station. The substation is built for two outgoing lines. The current carrying capacity of all the electrical equipment allows transmission of unit output on the two outgoing high voltage lines.

For a single unit station, the switchyard is comprised of two bays containing six power circuit breakers arranged in a breaker-and-a-half bus configuration. The switchyard allows for a future expansion to the number of bays, needed for the maximum number of generating units and transmission lines.

The high voltage breakers are three-pole, high-speed breakers fitted for single pole tripping and re-closing. Operating duty is in accordance with the IEC rated operating sequence for breakers intended for fast re-closing. Breakers are equipped with closing resistors and opening resistors. Breaker switching resistors keep the switching overvoltages below 230 percent of nominal system voltage.

The switchyard breakers are operated by remote supervisory control from the grid system operations. The synchronizing breakers connecting the units to the transmission lines are controlled from the main control room panels, individually for each unit. Monitoring of the offsite power sources in the main control room is provided. Monitoring of the main generator

output leads to the switchyard is provided. Status of all circuit breakers in the switchyard and the synchronizing circuit breaker is provided via input from the supervisory control system. Annunciation accompanies a failure of the supervisory system.

A direct communication link between the station operator and the grid system operations is established which permits co-ordination during all stages of plant operation including:

a) Starting up and synchronizing of the units to the grid.

b) Setting station output power level, including notification of pending start-up and shutdown actions.

c) Notifying the station operator of any long term frequency and voltage drifts in the grid, beyond normal fluctuations.

Line relay protection that detects faults on the transmission line(s) and isolates the power sources to the switchyard by tripping the power circuit breaker at the line terminals is provided. Breaker failure relaying, applied at each line terminal, detects a failure to trip or failure to interrupt condition at the line terminal and trips all associated circuit breakers necessary to isolate the line. Relay protection between the main output transformer and the synchronizing breaker is provided.

Service power to the switchyard is provided from the switchyard's local distribution system. Line protection equipment power, control power to the synchronizing power circuit breaker and power to the on-site relaying equipment are provided by the switchyard's 250 V DC power supplies, independent from the units' dc systems.

8.5 Onsite Power System

The onsite electrical power system, in each unit, consists of the main power output system and the unit's electrical distribution system (EDS). The main power output system transmits power produced by the turbine generator to the transmission system. This system consists of the turbine generator, 22 kV (typical) system, the 22-500 kV step-up main output transformer, the 22-13.8/4.16 kV unit service transformer and the 500-13.8/4.16 kV system service transformer. Details are provided in the following sections.

8.5.1 22 kV System

The nominal operating voltage of the turbine generator is 22 kV. The 22 kV system transmits power from the generator terminals to the main step-up transformer and through a tap-off feeds the unit service transformer. The 22 kV system also supplies the static excitation system of the generator. The 22 kV system comprises the following:

a) Unit service transformer,

b) The turbine-generator current and potential transformers,

c) The generator surge protection equipment,

d) The generator neutral grounding equipment,

e) The generator excitation system,

f) Isolated phase bus ducts between the generator terminals and the unit service and the main step-up transformer,

g) The generator load-break switch or generator circuit breaker.

Note: for the multi-unit station with the switchyard employing a "breaker-and-a-half" bus arrangement, each unit must have the generator load-break switch.

Current transformers are supplied with the generator and are located on the output bushings. The current transformers are used for generator protection, metering and voltage regulation.

Potential transformers are provided. They are located in free-standing, sheet metal cubicles. High rupturing capacity type fuses are provided on both high voltage and low voltage sides.

The potential transformers cubicles are provided with a key-locked door, inspection windows, internal lights and necessary terminal blocks.

The generator surge protection equipment is housed in a separate freestanding cubicle. A discharge counter, complete with insulating bases, records the number of lightning or switching surge discharges automatically. The cubicle houses the conducting links in fuse holders, ground bus, terminal blocks, nameplates, etc., and has provision for terminating the isolated phase bus. Removal of the conducting links isolates the capacitors.

A distribution type transformer and a resistance is used for the generator neutral grounding. The transformer is provided with a stainless steel grounding resistor, with a sixty seconds short time rating. A disconnect switch with a dead front operating mechanism has provision for padlocking in either position.

The isolated phase bus consists of a main section for connection between the generator, the generator breaker/load-break switch and the main step up transformer with taps for connection from the main section to the unit service transformer, the excitation system, the potential transformers and surge protection cubicles. The bus duct is forced-air-cooled and is supplied complete with cooling equipment suitable for low voltage three-phase supply.

The isolated phase bus is equipped with the necessary hardware to permit the "back-feeding" of the unit distribution buses from the grid with the main generator disconnected, without exposing the distribution system to uncontrolled overvoltages.

Parts of the main bus duct and taps to the unit service transformer are suitable for outdoor use, while the balance of the equipment is for indoor use.

Wall entrances and vapour barriers are provided between the indoor and outdoor sections of the bus ducts.

The bus duct is supplied complete with all necessary support steel work, mounting hardware, gaskets and flexible connections. The bus and the bus housing allow for expansion or contraction due to changes in the ambient temperature.

The bus duct is shop assembled to reduce installation time at site. Tests are performed on the bus ducts before shipment, in accordance with ANSI standards.

8.5.2 Generator Load-Break Switch*

The generator load-break switch allows the elimination of isolating links in the generator bus duct system.

The generator load-break switch handles isolation of the generator from the system. It carries the fully rated current of the generator, and has a high dielectric strength.

* A generator circuit breaker can be used instead of a load-break switch. This will allow additional station operation flexibility and enhanced generator security.

8.5.3 Main Output Transformer

The main transformer steps up the generator output voltage from 22 kV to the transmission voltage (500 kV typical).

The output transformer is a three-phase unit, or three one-phase units, conservator type, built to CSA standard C-88. The high voltage winding is star connected and the low voltage winding is delta connected. Since the star point is solidly grounded, graded insulation is provided for the high voltage. The high voltage bushings are of extended creepage path type with a specified basic insulation level maintained.

The transformer is supplied with all standard accessories as specified in CSA standard C-88. In addition, the following accessories are supplied:

a) Gas detector relay with alarm and trip contacts and with provision for gas sampling,

b) Terminal connectors for the high voltage bushings. An overhead line connects the transformer to the switchyard,

c) Grounding strap,

d) Dehydrating breather,

e) Winding temperature detectors,

f) Control equipment for the operation of the oil cooling system,

g) Winding temperature indicator in the main control room and at the transformer,

h) Off load tap changer.

The conservator is designed to operate in an ambient temperature in the range of -25°C to 40°C. The transformer tank and cooling equipment are suitable for full vacuum filling. The transformer is shipped nitrogen-filled complete with nitrogen bottles, regulating equipment and impact recorders. Oil for the first filling of the transformer is supplied.

The cooling pump and fan motors are suitable for low voltage three-phase supply.

The low voltage side is provided with a throat connection for the termination of the isolated phase bus.

Current transformers are provided on the high voltage bushings and on the high voltage neutral bushing.

The transformer undergoes tests in accordance with ANSI C.57.12.90, prior to shipment.

8.5.4 System Service Transformer

On startup, the system service transformer, supplied from the switchyard, feeds the station auxiliary system. However, the transformer's rating is fully compatible with the unit's house load such that during normal operation the house loads may be energized through the SST.

The system service transformer is a conservator type, designed and built in accordance with the CSA Standard C-88. The transformer undergoes the same tests specified for the main output transformer. The transformer is shipped nitrogen filled.

The transformer is a three-phase 3 windings unit, with the high voltage-winding star connected and solidly grounded. The low voltage windings are also star connected and grounded through resistors. An unloaded delta connected winding is included. The transformer is provided with an on-load tap changer for automatic operation and maintaining of the voltage on the low voltage side.

The high voltage bushings are of the extended creepage type. The low voltage side has provision for terminating the non-segregated bus ducts. The low voltage grounding resistors are of stainless steel, and 1000 A continuous rating.

8.5.5 Unit Service Transformer

The transformer is fed from the generator output system and is a conservator type and is designed and built in accordance with the CSA standard C-88. The transformer undergoes the same tests specified for the main output transformer. The transformer is shipped nitrogen filled.

The transformer is a three-phase 3 windings unit. The high voltage winding is delta connected and the low voltage windings are star connected and grounded through resistors. The transformer is provided with on on-load tap changer.

The high voltage bushings are of the extended creepage type. The low voltage side has provision for terminating non-segregated bus ducts. The low voltage grounding resistors are stainless steel, and 1000 A continuous rating.

8.6 Normal Power Sources

8.6.1 General

Power for the station service distribution system during normal or shutdown conditions is supplied from two sources: the offsite network and/or the unit generator.

On start-up, the system service transformer from the switchyard supplies the station service power. After the generator is synchronized to the grid, the station service loads are transferred so that they are shared between the system service transformer and the unit service transformer or supplied from the unit service transformer.

The medium voltage switchgear (13.8 kV and 4.16 kV) is of the indoor arc-resistant type with draw-out vacuum or SF_6 circuit breakers with a nominal interrupting capacity of 40 kA and 50 kA symmetrical, respectively.

The low voltage (480 V) buses are supplied through step-down transformers from the 4.16 kV buses. The size and impedance of the transformers permit starting of the low voltage motors without excessive voltage drop and limiting fault currents. This allows the use of commercially available switchgear. The neutral of the low voltage system is solidly grounded. The low voltage loads are limited generally to 300 A. Loads up to 100 A, generally, are supplied from the motor control centres through moulded-case circuit breakers with high rupturing capacity of 65,000 amperes, and between 100 A and 300 A from the low voltage switchgear. The low voltage switchgear is metal enclosed with draw-out air circuit breakers.

8.6.2 Transfer Systems

To provide electrical power with high reliability to the Class IV and Class III loads, an automatic transfer system is incorporated which ensures continuity of supply in the event of a failure of the unit or a failure of the system supply.

Transfers are accomplished by operation of either the generator breaker or the switchyard perimeter breaker, or the incoming circuit breaker on the primary distribution buses (13.8 kV) to transfer the sources between the unit service transformer and system service transformer.

Three transfer schemes are provided:

a) A parallel transfer scheme, which is manually initiated but automatically supervised and executed, to allow for a transfer between the two sources at the end of the station start-up phase or before shutdown or as needed during normal operation of the plant, e.g. mechanical trips on the turbine, reactor trips and generator stator cooling trips (both via turbine trip),

b) A fast open transfer, which is automatically initiated, supervised and executed, on electrical faults on the main generator or any of the main transformers; this “dead bus” transfer is allowed to proceed only when both of the incoming breakers are in the open position during the transfer,

c) A residual voltage transfer, used as a backup to the fast open transfer, activated on failure of the fast open transfer to be completed within the prescribed time, or when the angular displacement of the two voltage vectors exceeds the allowable limits. The latter are dependent on the capabilities of the distribution equipment and loads.

Transfers are manually initiated for normal transfers after start-up or before shutdown and automatically initiated for reactor trips, turbine-generator trips or loss of the transmission system.

8.6.3 Electrical Power System Station Services

Typical standard system voltages and their allowable steady state variations are:

Class I	220/250 V (DC)	+ 10 percent - 15 percent
Class II	120/220/240 V (AC) single phase	± 5 percent
	208 V (AC) three-phase	± 5 percent
	400/415 V (AC) three-phase	± 5 percent
	480 V (AC) three-phase	± 5 percent
	600 V (AC) three-phase	± 5 percent
Class III	6900 V (AC) three-phase	± 5 percent
	4160 V (AC) three-phase	± 5 percent
	600 V (AC) three-phase	± 10 percent
	480 V (AC) three-phase	± 10 percent
	400/415 V (AC) three-phase	± 10 percent
	208 V (AC) three-phase	± 10 percent
	240/220/120 V (AC) single-phase	± 10 percent
Class IV	13800 V (AC) three-phase	± 5 percent
	11600 V (AC) three-phase	± 5 percent
	6900 V (AC) three-phase	± 5 percent
	4160 V (AC) three-phase	± 5 percent
	600 V (AC) three-phase	± 10 percent
	480 V (AC) three-phase	± 10 percent
	400/415 V (AC) three-phase	± 10 percent
	208 V (AC) three-phase	± 10 percent
	240/220/120 V (AC) single-phase	± 10 percent

8.6.4 Electric Circuit Protection Systems

Protective relay schemes and direct-acting trip devices on primary and backup circuit breakers are provided throughout the on-site power system in order to:

a) Isolate faulted equipment and/or circuits from un-faulted equipment and/or circuits,

b) Prevent damage to equipment,

c) Protect personnel,

d) Minimize system disturbances,

e) Maintain continuity of the power supply.

The circuit protection system is designed so that fault isolation is secured with minimal circuit interruption. The combination of devices and settings applied affords the selectivity necessary to isolate a faulted area quickly with a minimum of disturbance to the rest of the system. The protective devices are pre-operationally tested. After the plant is in operation, periodic tests will be performed to verify the protective device calibration, set points and correctness of operation.

8.7 Diesel-Generator

8.7.1 General

The continuous rating of the standby diesel generators within each category of seismically and non-seismically qualified units is greater than the sum of conservatively estimated loads to be supplied following the design basis events.

Each generating set consists of a salient pole synchronous generator directly coupled to a diesel engine complete with all auxiliaries including air intake supply and exhaust ducting, lubricating oil system with heat exchangers, cooling system, starting system, fuel system, excitation system, governor and control panels.

The standby diesel generators are capable of maintaining, during steady state and loading sequence, the frequency and voltage above a level that may otherwise degrade the performance of the loads. The standby diesel generators are capable of recovering from transients caused by a step load increase or resulting from the disconnection at partial or full load so that overspeeds are controlled to tolerable levels.

The generators are constructed to ANSI Standard C 50.10 and C 50.12. The exciters are constructed to ANSI Standard C 50.5 and C50.13. The generators insulation is Class F or better with Class B temperature rise.

8.7.2 Diesel-Generator Protection

The diesel-generators are provided with the appropriate protection.

While supplying loads following an automatic start, each diesel engine and related generator circuit breaker are tripped by protective devices under the following conditions only:

a) Engine overspeed,

b) Generator differential.

Additional mechanical and electrical protections are provided which are alarmed if the diesel-generator has been automatically started, but which will trip and shutdown the diesel-generator if it has been manually started (e.g. during routine periodic testing).

The generator is resistance grounded through a distribution transformer, to limit damage to the generator and equipment on internal faults. The magnitude of the ground fault current is sufficiently high to permit coordinated relaying and the ohm value of the resistor is selected to prevent transient over-voltages on arcing grounds. A ground fault relay is provided in the generator neutral for back-up ground fault protection, and alarms on the occurrence of a detectable ground fault.

8.7.3 Fuel System

The engines operate on diesel fuel oil. The fuel is stored in two main tanks, one for each engine, each having the capacity to supply a diesel-generator for seven days of continuous operation at nominal load. Each diesel has an indoor day tank with a capacity for a minimum four hours of operation. Each fuel system is provided with a fuel transfer pump driven by an AC motor, to transfer the fuel from the corresponding main tank to the corresponding day tank.

The fuel is fed from the day tank to the engine via two redundant pumps, one of which is engine driven, and the other driven by an AC motor. Fuel meets the requirements of ASTM D975 and D2274.

8.7.4 Starting System

The starting system is designed to initiate an engine start so that within 30 seconds after receipt of the start signal the diesel generator has attained rated speed and voltage and is ready to receive electrical loads.

The engines are started utilizing an air motor. Two air reservoirs are provided for each diesel. The starting system has the capability to black start of the diesel with only the start signal being required.

The starting circuit is also equipped with a “fail to start” protection that interrupts the starting of the diesel generator if a predetermined speed is not reached within limited time following a start initiation.

8.7.5 Lubrication System

The lubrication system stores and supplies lube oil for the standby diesel generator. The system is designed to supply lube oil to the engine bearing surfaces at controlled pressure, temperature and cleanliness conditions. The system provides sufficient, reliable, sump storage of lube oil for operating the standby diesel generator for at least seven days at its maximum rated load without make-up. Lube oil can be added manually to the engine during operation if necessary.

8.7.6 Cooling Water System

The diesel engines are self-cooled through closed-loop water-to-air cooling system. The functions of the cooling water system are to cool the diesel engine, turbo charger after-coolers, and lube oil to permit continuous operation of the diesel generator at maximum rated load.

8.7.7 Combustion Air and Exhaust System

The diesel generator combustion air intake and exhaust systems are capable of supplying adequate combustion air and disposing of resultant exhaust products to permit operation of the diesel generator under maximum rated load and extremes of the ambient temperature. Combustion air temperature is regulated to allow for proper operation of the diesel engine. To sustain normal engine operation, the systems are arranged to minimize the effects on combustion air quality by re-circulation of engine exhaust gases.

8.7.8 Periodic Testing and Synchronization

After being placed in service, the standby power system is tested periodically to demonstrate continual ability to perform its intended function. The diesel-generators can be synchronized to the Class IV system for routine exercising. Automatic synchronizing facilities are provided. Only one diesel generator is tested at a time. No facilities are provided for parallel operation of the diesel generators.

8.8 Unit Service Distribution

The electrical distribution system distributes AC power at 13.8 kV, 4.16 kV, 600 volt, 120 volt and 208/120 volt, and DC power at 250 volt to the loads. All switchgear utilizes a 250 V (DC) Class I control power.

The Class III power supply system provides an alternate source of electrical power to essential systems in the unlikely event that normal electrical supplies are lost. Events specifically dealt with by the standby power supply system are:

a) Loss of Class IV,

b) Loss-of-coolant accident,

c) Steamline break,

d) Feedwater line break.

The system is controlled from the main control room.

8.8.1 13.8 kV, 4.16 kV (Typical) Distribution

8.8.1.1 13.8 kV, 4.16 kV Switchgear

The 13.8 kV and 4.16 kV medium voltage switchgear is of the indoor metal-clad type and is provided with draw-out oil-less circuit breakers. The switchgear is constructed to CSA or NEMA Standards for arc-resistant switchgear. The switchgear housing is arc-resistant type C. The switchgear assembly is of the free standing type, and the assembly is anchored to the floor channels after alignment. Each breaker cell is totally isolated from adjacent cells thereby greatly reducing the chances of damage to the entire assembly due to an arc in one of the cells. Arc

energy is only allowed to vent out the top of switchgear cell. Automatic shutters are provided to completely isolate the energized sections after the removal of breakers from the cell.

The main and cells buses are copper, silver-plated at the joints. The entire buswork is insulated with flame retardant moulded-on insulation. Insulating boots cover all bus joints.

The 13.8 kV and 4.16 kV circuit breakers have an interrupting capacity 50 kA and 63 kA, respectively, symmetrical. The breakers are provided with a stored energy mechanism for closing, and they are suitable for remote operation. Provision is made to test the breakers locally for maintenance purposes. The breaker assembles are provided with indicating lights, operation counters and control switches. All instruments, protection and control relays associated with individual breakers are located in a separate instrument compartment in each breaker cell. Potential transformers for bus sections are located in a draw-out case and supplied with high rupturing capacity fuses on the high and low voltage sides. Current transformers for metering and relaying services are the dry type. They are located in each cell. Current and kW indicators are also provided.

All medium voltage motor feeders are provided with instantaneous and time overcurrent protection, instantaneous ground fault protection, negative sequence protection, and current indication.

Motors above 2700 kW are also provided with differential protection.

Auxiliary transformer feeders are provided with overcurrent, instantaneous overcurrent and an instantaneous ground fault protection.

The medium voltage switchgear assemblies are connected to the respective service transformer dual secondaries via fully separated, non-segregated, non-ventilated bus ducts. The bus duct is of the indoor/outdoor type, rated at 15 kV and 5 kV, respectively.

The switchgear assemblies and bus ducts are shipped assembled. The circuit breakers are shipped separately.

8.8.1.2 Medium Voltage Grounding System

The medium voltage system is resistance-grounded with the ground fault current being limited to 1000 A. The limited ground fault current minimizes damage to the motor stator laminations on internal faults. The resistance grounding also reduces the sustained overvoltage on the occurrence of a ground fault. This improves the transient stability of the power system and eliminates transient over-voltages due to arcing grounds associated with ungrounded systems.

8.8.2 Secondary Distribution

The 600 V Class IV buses are supplied via 4 kV-600 V transformers from the two Class IV 4.16 kV buses. The 600 V Class III buses are supplied through the 4 kV-600 V transformers from the Class III 4.16 kV buses.

The 600 V system supplies power to motors (240 kW and below), motor control centres and the plant lighting system.

8.8.2.1 General

The 600 V transformers are dry, indoor type and are manufactured to CSA standards C9 and C22.2#47. The transformers are designed for maximum ambient temperature of 40°C.

Commercial tests are performed on the transformers before shipment.

The transformers impedance is selected to permit starting of the largest 600 V motor without excessive voltage drop and to limit the fault current on the 600 V bus to 65 kA symmetrical. This allows the use of commercially available switchgear. The 600 V system is solidly grounded. The solid grounding ensures fast clearance of ground faults and permits the use of direct-acting trip units on the 600 V switchgear.

The 600 V switchgear and the 600 V transformers are assembled as a unit substation. The main buses are copper, rated at 3000 A with a 55°C temperature rise. The buses are provided with moulded-on insulation. The bus assemblies are supplied complete with all connecting hardware, hangers and supports.

8.8.2.2 600 V Switchgear

Fourteen switchgear assemblies, six Class IV, six Class III and two Class II, are provided. All lighting feeders, motor control centre feeders and 75 kW to 240 kW motors are supplied via air circuit-breakers located in the metal enclosed switchgear.

The seismically qualified Class III and Class II switchgear assemblies and all distribution equipment located in RAB and dedicated to NSP loads are located in the reactor auxiliary building electrical rooms.

The metal enclosed switchgear assembly consists of a group of air circuit breakers installed in individual draw-out compartments. The assemblies are free-standing and meet the requirements of EEMAC standards SG-3 and SG-5, and ANSI standard C 37.13.

The breakers are the air-break type, with an interrupting rating of 65,000 amperes. Individual circuit breaker compartments are isolated from each other and from the bus compartment. The circuit breakers are operated by a stored energy mechanism and are capable of either manual or remote operation. The continuous rating of the transformer secondary breakers is 3000 A. All breakers are provided with trip units including ground fault protection for selective system tripping, overload protection and instantaneous overcurrent protection.

The protection and control relays associated with each assembly are mounted in the top compartment of the switchgear. Where required, the assemblies are provided with two 600-120 V dry type potential transformers for metering and control. The potential transformers are installed in a separate draw-out compartment.

Each switchgear assembly is provided with a spare cell, complete with cradle and auxiliary contacts to accept a 1600-Ampere frame air circuit breaker.

8.8.2.3 600 V Motor Control Centres

Motors less than 76 kW are supplied from motor control centres equipped with combination starters. The motor control centres are EEMAC Type I, general-purpose type, suitable for indoor installation. The centres are constructed to EEMAC standard 5E.

The main control centres are arranged for back-to-back installation. Individual starters are factory-wired and all the control wiring terminates in a relay and terminal compartment located at the bottom of each vertical section. This arrangement minimizes installation and wiring time in the field.

The combination starters are connected to the vertical buses in each section by plug-in stab connectors. Each starter is provided with a three-pole magnetic air circuit breaker rated 65 kA symmetrical for short circuit protection, a fully rated 3-pole contactor with auxiliary contacts, three thermal overload relays, a 575-120 V control circuit transformer, and interposing relays, as required.

Combination starters with circuit breakers are used instead of the fused starters to prevent the possibility of a single-phase operation. Appropriate number of main control centres is provided. Approximately 10 percent additional starters are supplied as spares.

The main control centres undergo dielectric tests, and mechanical operation tests on the starters and functional tests on all relays before shipment.

The Class IV, Class III and Class II motor control centres dedicated to nuclear steam plant loads are located in the reactor auxiliary building electrical rooms and various other nuclear steam plant locations such as maintenance building, etc. Motor control centres for the other buildings are located within those buildings.

8.8.2.4 600/120 V Supply Class III and Class IV

600/347/120 V, 4-wire systems are used exclusively for the station lighting.

The lighting panels are supplied with moulded-case breakers with instantaneous trips. The panels are suitable for surface mounting. Each panel board has spare circuits for future loads.

8.8.2.5 208/120 V Class III Supply

The system feeds the building services, incandescent lighting and small power installation. Combination starters are used for motor load and breakers for heater loads.

The power is obtained through the 575-208/120 V dry type transformers.

8.9 Uninterruptible Power Supplies

8.9.1 Uninterruptible Class II Supplies

The power for instrumentation, computers, critical motor loads and essential lighting is normally supplied from static inverters supplied from the Class I system, batteries and/or batteries' rectifier/chargers.

The instrumentation and distributed control system are fed from three 120 V single-phase inverters to ensure complete independence of supply to the triplicated reactor regulating and protection instrumentation. Each bus has dual redundant inverter source.

Small safety-related motor loads and essential lighting are fed from duplicated three-phase buses to ensure complete independence of supply to the redundant process systems. Each bus has an inverters source and an alternate (unregulated) Class III source.

There are no bus interconnections at the Class II levels. All connected loads are designed so that no bus interconnections can occur. The triplicated channels are arranged so that each channel can be switched to either ODD or EVEN source.

Electrical isolation is provided between the outputs and the inputs of each inverter and voltage-regulating transformer.

The power conversion and the main distribution buses of Class II are located in the reactor auxiliary building electrical rooms.

8.9.2 Uninterruptible Class I Direct Current Supplies

Loads requiring DC power are normally supplied with Class I direct current power by the Class I storage batteries that are continuously charged from the Class III system. Two systems are provided. One for the dc emergency loads of the turbine generator set. The other, main system is utilized as a prime power source to the Class II inverters and for the control logic of the standby generators and switchgear operation. The rectifier/charger, batteries and the main distribution bus of the BOP Class I are located in the crane hall. The rectifiers/chargers, batteries and the main distribution buses of the main Class I are located in the reactor auxiliary building electrical rooms.

Batteries are of the lead-calcium type, sized in accordance with IEEE 485, with appropriate aging, design and temperature factors contributing to the battery capacity. The battery will be operational to a low voltage of 215 V (DC). Each battery system is instrumented to provide indication of an overvoltage or undervoltage condition, together with a voltmeter and ammeter to provide status indication. Cables between a battery and a battery bus are run in non-metallic conduit, each pole run separately, to preclude the possibility of a short circuit of the battery.

The redundant battery chargers are sized in accordance with IEEE 946, and have a capacity to supply all DC loads, both momentary and continuous, and at the same time are able to re-charge a depleted battery in a stated time. Each pair of battery chargers connected to a DC bus works in

an active parallel redundant mode, with each charger able to supply all loads independently. Each battery charger is fitted with a float/equalize switch and a 24 hour timer to automatically supply an equalizing charge when required and is fully instrumented to provide status indication and alarms for both input and output circuits.

Each battery room is connected to the ventilation system with an inlet and outlet flow of air sufficient to prevent a dangerous accumulation of hydrogen during float, and particularly equalizing, operations of the battery. Each room is independently purged by a safety related fan and motor, and fire dampers are supplied to prevent the possibility of the spread of fire to adjacent rooms. To preclude the possibility of room temperatures below 15°C, the inlet air will be pre-heated, if necessary, by safety related heaters. Instrumentation in each battery room will alarm at excessively low or high temperatures.

The battery systems are ungrounded and ground fault detection equipment is provided to alarm on the occurrence of a significant ground fault.

All circuit breakers connected to the 250 V (DC) bus are of the air break type and have an interrupting capacity of 25 kA, sufficient to clear a bolted fault in any part of the DC system where contributions to the fault current are made by the battery, the battery chargers and any DC motors connected to the system. Coordination of all circuit breakers and fuses is a feature of the design. In addition, the bus itself has a capability to withstand, without damage, the maximum fault currents likely to flow from all sources.

All loads on the DC system are supplied from distribution panels that are in turn supplied from the DC bus. All distribution panels are designed to withstand the possible short circuit currents and load protective devices are coordinated with the battery bus feeder breakers.

There are no bus interconnections at the Class I levels. All connected loads are designed so that no bus interconnections can occur. The triplicated channels are arranged so that each channel can be switched to either ODD or EVEN source.

Electrical isolation is provided between the outputs and the inputs of each rectifier/charger.

8.10 Motors

8.10.1 Medium Voltage Motors

Motors above 240 kW are supplied from the 4.16 kV buses and motors above 3500 kW are supplied from the 13.8 kV buses. Circuit breakers are used for motor starting duty. The motors are totally enclosed, water cooled or drip-proof type, Class F insulated, with Class B temperature rise, NEMA design B and rated for continuous operation and for across-the-line starting. The motors are constructed to NEMA standard MG-1.

The motors are suitable for operation within ±10 percent of nameplate rated voltage of 13.2 kV and 4 kV. The phase connections of the motor are internal and only the power supply leads are

brought out to the motor terminal box. The terminal box is sized to accommodate the stress cones on the power supply cables.

Temperature detectors are provided in the windings for alarm purposes. Heaters in the motor enclosure for motors above 75 kW prevent moisture condensation during prolonged periods of motor shutdown.

The motors undergo complete tests as defined in IEEE standard 112 which consist of routine tests, performance tests and specific tests.

8.10.2 575 V Motors

Squirrel cage motors are used for station auxiliaries. The motors are designed to NEMA standard MG 1 and are suitable for across-the-line starting. The motors have Class B or Class F insulation and are usually open drip-proof type. The motors are suitable for operation with a ± 10 percent voltage variation of nameplate rated voltage of 575 V.

Tests are performed on the motors before shipment. Motors required to operate after a loss-of-coolant accident are environmentally qualified. Motors required to operate following an earthquake are also seismically qualified.

8.11 Tests for Electrical Equipment

The nuclear steam plant motors and equipment are tested according to IEEE and NEMA standards. These tests are described in the respective test specifications for the equipment.

8.12 Lighting

The levels of lighting and types of fixtures employed are chosen in accordance with the recommendations from the Illuminating Engineering Society. Standard commercial and industrial lighting is used, employing mercury vapour, induction, fluorescent and incandescent fixtures. To avoid stroboscopic effects, alternate lighting fixtures are connected to different phases.

Normal lighting is provided by the system connected to the Class IV and the standby lighting is provided by the system connected to the Class III distribution. Approximately 30 percent of the lighting is energized from the Class III system.

Sufficient capacity is installed in the lighting distribution system to provide for the reactor building, service building and for the client's lighting supply such as the gate, warehouse, yard, and fence lighting. Supplies are made available for small miscellaneous power requirements. Equipment for aircraft warning lights is supplied in accordance with local regulations.

Essential lighting is provided by Class II and also by the wall-mounted self-contained fixtures with built-in storage batteries. All seismically qualified areas have seismically qualified emergency lighting.

8.13 Cabling System

8.13.1 Introduction

The connections from the nuclear steam plant equipment to the respective switchgear are by cables laid on cable trays and/or in rigid and flexible conduits.

Power cables are used for distributing electrical energy to motors and other equipment at voltage levels of 120 V to 13.8 kV.

Control and instrumentation cables are used to supply electrical power to instruments and control devices or as an electrical signal carrier for controlling, interlocking, or monitoring purposes.

Cables meet the requirements of the IEEE standard 383.

8.13.2 Power Cables

Power cables have stranded copper conductors with insulation whose type is governed by voltage level, ambient environment, maximum operating temperature and expected radiation exposure. Fire retardant materials are used, as appropriate. Polymeric thermosetting insulation is used.

The outer jacket of power cables is resistant to pulling abrasion, moisture, acids, oils and alkalies, and meets the requirements specified below:

a) Thermal Stability

   Power cables have a minimum continuous insulation operation temperature rating of 90°C and a short circuit rating of 250°C.

b) Moisture Resistance

   Cables installed within the containment area may be subjected to relative humidity conditions up to 100 percent.

c) Fire Resistance

   To minimize the potential effect and damage that can be caused by a cable fire, cables are of a flame retardant type.

d) Radiation Resistance

   Cables installed within containment areas retain their original electrical properties after the total cumulative radiation dosage dictated by plant design.

e) Chemical Stability

   Cables installed in areas where exposure to corrosive agents such as oils, ozone, acids or alkalies is possible, are chosen for chemical stability.

f) Flexibility

Selected power cables that are subject to flexing as part of their normal function are chosen for their flexibility.

g) Shielding

To minimize stresses across the conductor's insulation the medium voltage cables are of shielded design with the shield grounded at one end.

8.13.3 Control and Instrumentation Cables

Cables used for instrumentation signals and instrument power supplies use solid conductors. Selected instrumentation signals may be carried on shielded or coaxial cables that have stranded conductors.

The selection of insulation type is governed by voltage level, maximum operating temperature and expected radiation exposure.

Control cables have a continuous insulation operating temperature rating of 90°C. In addition, the control cables have special features with twisting, shielding, or drain wire to reduce electrical noise. Insulation ratings of 300 V for systems up to 200 V and 600 V for systems above 200 V and below 600 V are used.

Power cable requirements (b) to (f) of Section 8.13.2 apply equally to control and instrument cables.

8.13.4 Cable Routing and Separation

The separation of circuits is achieved by structural design, distance or barrier, or any combination thereof. Whenever possible, cable trays are arranged from top to bottom, with trays containing the highest voltage cables at the top. A raceway designated for one voltage category of cables contains only those cables.

Electrical equipment and cabling has been arranged to minimize the propagation of fire from one division/channel to another. Where the minimum physical separation cannot be met, a fire barrier is selected as the alternative. Fire stops and seals are provided for cable penetrations in the floor for vertical runs of open raceways and at fire-rated wall penetrations. The fire stops are furnished to provide a method of sealing off air spaces around cable penetrations.

8.14 Containment Penetrations

The penetration seals must withstand the pressures and temperatures developed in the reactor building following a loss-of-coolant accident, or a main steam pipe rupture.

The penetrations are qualified to the ASME Boiler and Pressure Vessel Code, Section III, Subsection NE, IEEE 317 and CSA N285.3.

The penetration assemblies are designed to withstand all rated cable short circuit currents and forces, to meet all seismic requirements applicable to the station, and to restrict the continuous heat loadings to values that will limit the steel/concrete interface temperature to 100°C (???°F).

Spatial separation is provided between the electrical redundant/channelized wiring containment penetrations.

All electrical cable penetrations through the reactor building wall are designed to prevent leakage and maintain service during normal and accident conditions.

The penetration assemblies are testable for leak tightness. The penetration assemblies are testable, as per IEEE standard 317.

8.15 Fire Protection for Cable System

Heat, smoke and fire detections are used for monitoring the cable routes. Sprinklers are used for control of fires in cable trays in all areas of the plant except the rooms with the electrical distribution system and the computer rooms.

8.16 Auxiliary Electrical System

8.16.1 Grounding

There are two grounding networks. The main network consists of several bare stranded copper wires, buried in the ground and connected at fixed intervals to grounding rods. This network encircles the buildings and is connected to two other grounding grids, one covering the switchyard area, the other consisting of metal conductors installed in the main water intake channel. All electrical apparatus, control panels, cubicles and all metal works in the building structures, stairs, reservoirs, etc., are connected to this grounding system. The ohm value of the ground resistance is less than 1 ohm.

The second grounding network is used for the station instrumentation. It consists of a network of insulated copper conductors. To avoid ground loop currents that could affect the instrumentation, the instrumentation grounding network is connected to the station ground only at one point, close to the geographical centre of the main grounding mat.

8.16.2 Lightning Protection

Lightning protection is provided, complying with applicable standards. The need for protection is based on structure height and usage.

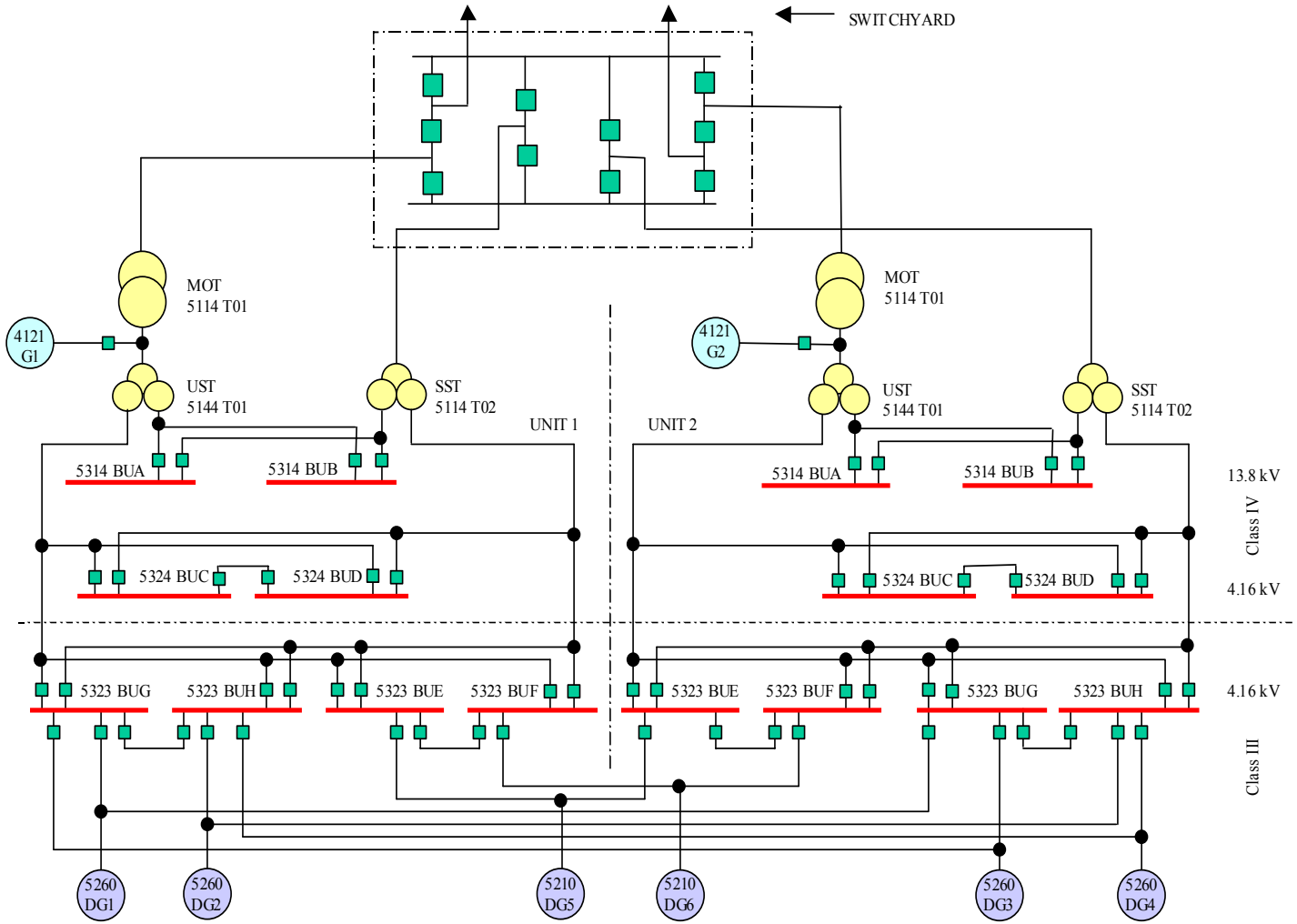

December 2003

Figure 8-1 ACR-700 Electrical Distribution System (EDS)

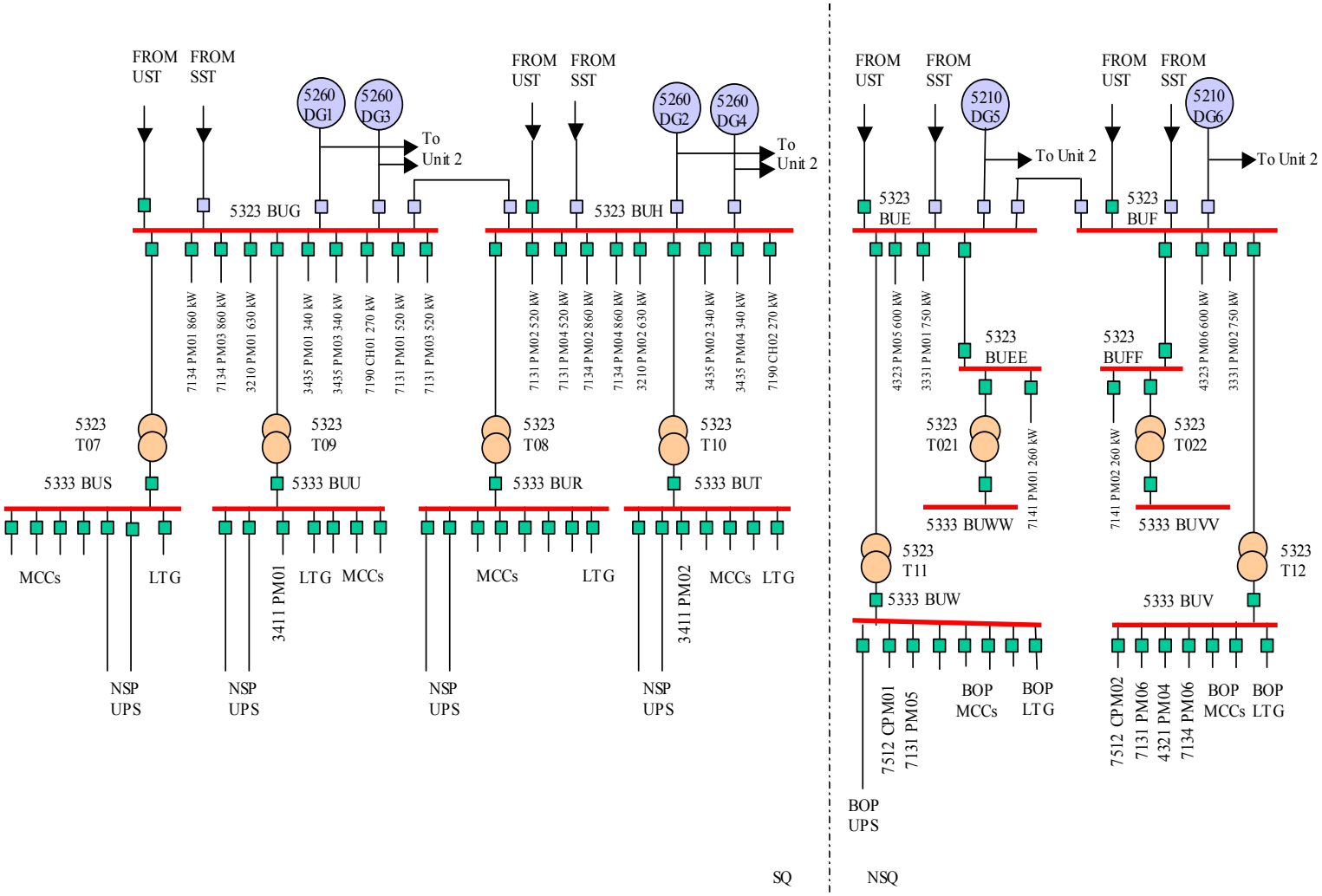

March 2004

Figure 8-2 ACR-700 Class III Distribution System

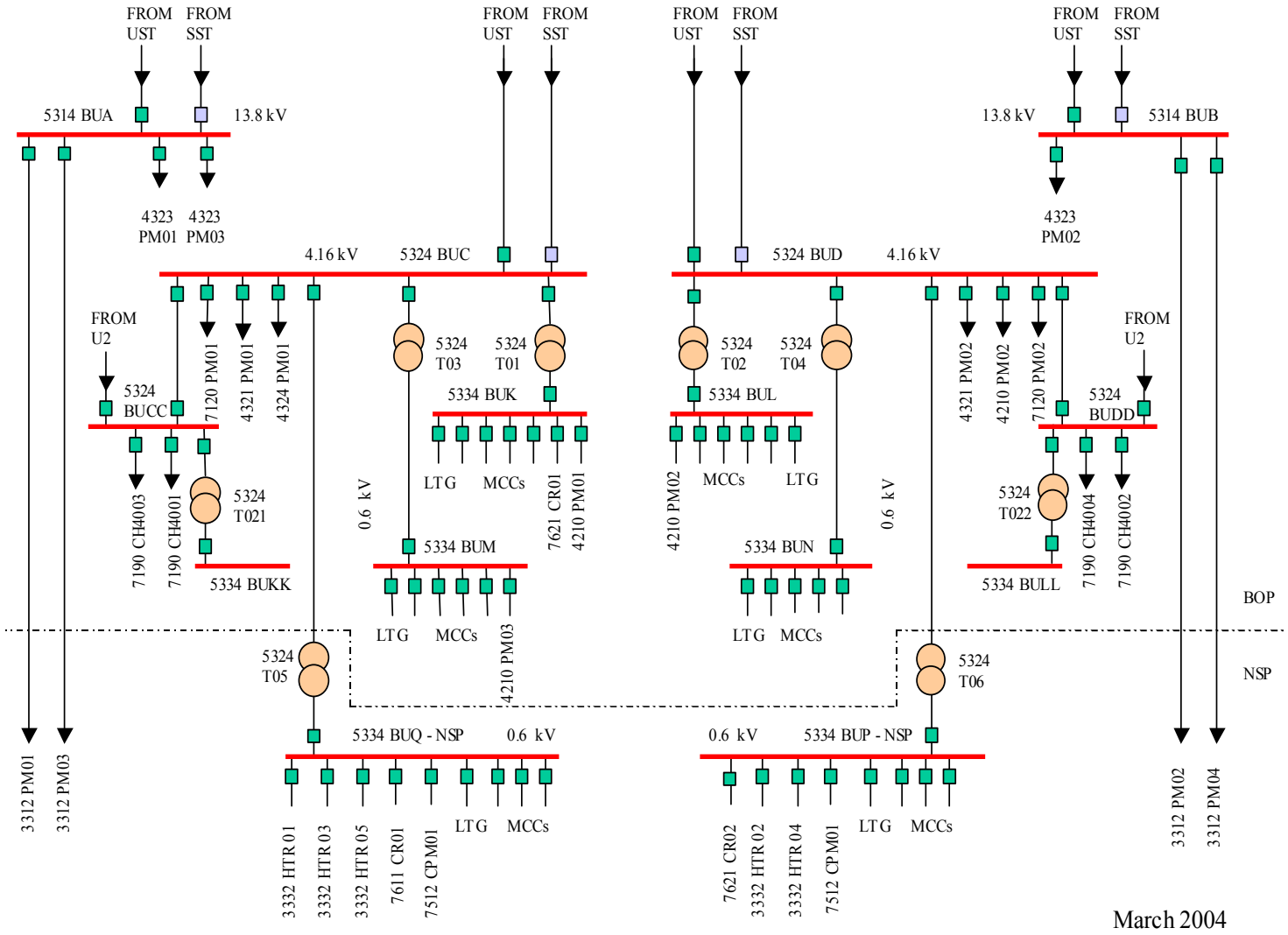

Figure 8-3 ACR-700 Class IV Distribution System

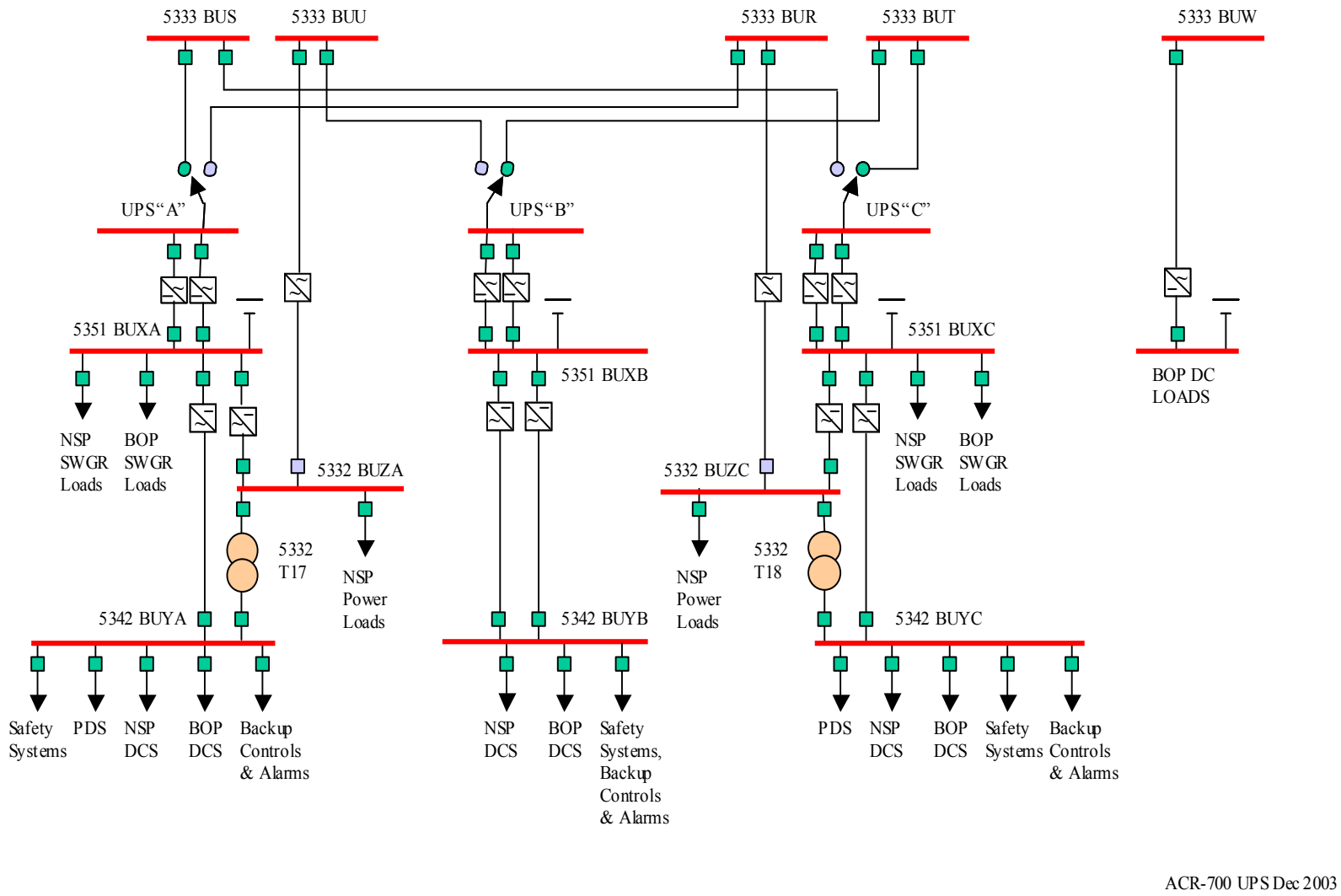

Figure 8-4 ACR-700 Un-interruptible Power Supplies

TABLE OF CONTENTS

SECTION **PAGE**

9. AUXILIARY AND SERVICE SYSTEMS 9-1

9.1 Safety Support Systems 9-1
9.2 Water Systems 9-3
9.2.1 General Description 9-3
9.2.2 Service Water Systems 9-3
9.2.2.1 Design Bases 9-3
9.2.2.2 System Description 9-4
9.2.2.3 Inspection and Testing 9-5
9.2.3 Demineralized Water System 9-9
9.2.4 Domestic Water System 9-9
9.2.5 Chilled Water System 9-9
9.2.6 Ultimate Heat Sink 9-10
9.2.6.1 Design Bases 9-10
9.2.6.2 System Description 9-11
9.2.6.3 Heat Loads 9-11
9.2.7 Reserve Water System 9-11
9.2.7.1 System Functions 9-11
9.2.7.2 System Description 9-12
9.2.7.3 Instrumentation and Control 9-13
9.3 Fuel Storage and Handling 9-15
9.3.1 Introduction 9-15
9.3.2 New Fuel Storage and Handling 9-17
9.3.2.1 Design Bases 9-17
9.3.2.2 System Description 9-17
9.3.2.3 Component Description 9-18
9.3.2.4 System Operation 9-19
9.3.2.5 Safety Aspects 9-19
9.3.3 Spent Fuel Handling and Storage 9-19
9.3.3.1 Design Bases 9-19
9.3.3.2 System Description 9-20
9.3.3.3 Component Description 9-21
9.3.3.4 System Operation 9-24
9.3.4 Fuel Changing System 9-25
9.3.4.1 Design Bases 9-26
9.3.4.2 System and Component Description 9-26
9.3.4.3 System Operation 9-30
9.3.4.4 Safety Aspects 9-31
9.3.5 Maintenance and Servicing 9-31
9.3.5.1 Normal Operations 9-31
9.3.5.2 Breakdown Operations 9-32
9.3.6 Equipment Testing 9-32

TABLE OF CONTENTS

SECTION **PAGE**

9.3.6.1 General 9-32
9.3.6.2 Acceptance Tests of Fuelling Machine Heads 9-32
9.3.6.3 Commissioning Tests and Acceptance Test 9-33
9.3.7 Fuel Handling Control System 9-33
9.3.7.1 General 9-33
9.3.7.2 Control Console 9-33
9.3.7.3 Fuel Handling Control System 9-34
9.3.7.4 Termination Rack 9-36
9.3.7.5 Control Cables 9-36
9.3.7.6 Signal Voltages 9-36
9.4 Fire Protection System 9-37
9.4.1 Design Bases 9-37
9.4.2 Fire Protection Design 9-38
9.4.2.1 Design Description 9-39
9.5 Process Auxiliary Systems 9-44
9.5.1 Compressed Air and Gas Systems 9-44
9.5.1.1 Compressed Air System 9-44
9.5.1.2 Post-Accident Instrument Air Supply 9-45
9.5.2 Drainage Systems 9-45
9.5.2.1 Non-Radioactive Inactive Drainage 9-45
9.5.2.2 Radioactive Drainage 9-46
9.5.2.3 Sanitary Drainage 9-46
9.5.2.4 Rain Water Drainage 9-46
9.5.3 H_2O/D_2O Sampling Systems 9-47
9.5.3.1 Heat Transport Sampling System 9-48
9.5.3.2 Moderator D_2O Sampling System 9-49
9.5.4 Chemical Control of Systems 9-50
9.5.4.1 Design Bases 9-51
9.5.4.2 Design Description 9-51
9.5.5 Annulus Gas System 9-53
9.5.5.1 Design Bases 9-53
--9.5.5.2 System Description 9-53
9.5.5.3 Component Description 9-54
9.5.6 Shield Cooling System 9-54
9.5.6.1 Design Bases 9-55
9.5.6.2 Design Description 9-55
9.5.6.3 Component Description 9-56
9.5.7 Resin Transfer System 9-56
9.5.7.1 Design Bases 9-56
9.5.7.2 Design Description 9-57
9.5.7.3 Component Description 9-58
9.5.8 Deuteration System 9-58

TABLE OF CONTENTS

SECTION **PAGE**

9.5.8.1 Design Bases 9-58
9.5.8.2 Design Description 9-59
9.5.8.3 Component Description 9-60
9.6 Heating and Ventilation and Air Conditioning 9-68
9.6.1 Reactor Building 9-68
9.6.1.1 Design Bases 9-68
9.6.1.2 System Description 9-69
9.6.1.3 Component Description 9-71
9.6.2 Reactor Auxiliary Building HVAC System 9-72
9.6.2.1 Design Bases 9-72
9.6.2.2 System Description 9-73
9.6.2.3 Air Supply System 9-74
9.6.2.4 Non-Contaminated Exhaust System 9-74
9.6.2.5 Clean Air Discharge System 9-74
9.6.2.6 Spent Fuel Bay Exhaust System 9-75
9.6.2.7 Secondary Control Area HVAC System 9-75
9.6.3 Service Building and Maintenance Building HVAC Systems 9-75
9.6.3.1 Design Basis 9-75
9.6.3.2 System Description 9-76
9.6.4 Main Control Building Air Conditioning 9-76
9.6.5 Turbine Building Heating and Ventilation System 9-77
9.6.5.1 Design Bases 9-77
9.6.5.2 System Description 9-77
9.6.6 CCW Pumphouse, RSW Pumphouse, and Fire Water Pumphouse Heating and Ventilation Systems 9-78
9.6.6.1 Design Bases 9-78
9.6.6.2 System Description 9-79
9.6.7 Auxiliary Boiler Building, Water Treatment Plant, and Diesel Generator Buildings HVAC Systems 9-79
9.6.7.1 Design Bases 9-79
9.6.7.2 System Description 9-80
9.7 Water Management 9-81
9.7.1 Heavy Water Management 9-81
9.7.1.1 Introduction 9-81
9.7.1.2 D_2O Supply System 9-81
9.7.1.3 D_2O Vapour Recovery System 9-82
9.7.1.4 D_2O Cleanup System 9-84
9.7.2 Light Water Supply System 9-86
9.7.2.1 Introduction 9-86
9.7.2.2 Design Bases 9-86
9.7.2.3 System Description 9-87
9.8 Other Auxiliary Systems 9-88

TABLE OF CONTENTS

SECTION **PAGE**

9.8.1 Spent Fuel Bay Cooling and Purification System 9-88
9.8.1.1 Design Bases 9-88
9.8.1.2 Design Description 9-89
9.8.1.3 Component Description 9-90

9. AUXILIARY AND SERVICE SYSTEMS

9.1 Safety Support Systems

Systems that provide reliable support services, such as electrical power, cooling water, and instrument air supplies to the safety systems are referred to as safety support systems.

Safety systems and safety support systems are designed to perform their safety functions with a high degree of reliability. This is achieved through the use of redundancy, diversity, separation, testability, the application of appropriate quality assurance standards, and the use of stringent technical specifications, including environmental qualification for accident conditions. The following systems are safety support systems:

a) Reserve Water System (Section 9.2.7)

   The ACR-700 design includes a reserve water system (RWS) with a reserve water tank. The tank, which is located at a high elevation in the reactor building, provides an emergency source of water to the containment sumps for recovery by the long term cooling (LTC) system in the event of a LOCA to ensure net positive suction head for the LTC pumps. In addition, the tank provides emergency make-up water by gravity to the steam generators (emergency feedwater), moderator system, shield cooling system, and the heat transport system if required.

b) Electrical Power Systems (Section 8)

   The electrical power systems supply all electrical power needed to perform safety functions under accident conditions, and non-safety functions for operational states. The safety related portions of the systems are seismically qualified and consist of redundant divisions of standby generators (SGs), batteries, and distribution to the safety related loads.

c) NSP Recirculated Cooling Water System (Section 9.2.2.2.2)

   The recirculated cooling water (NSP-RCW) system circulates demineralized cooling water to different loads in the plant. The NSP-RCW system is seismically qualified and comprised of two redundant closed loop divisions. Both divisions operate during normal operation.

d) NSP Raw Service Water System (Section 9.2.2.2.1)

   The raw service water (NSP-RSW) system disposes of the heat from the NSP-RCW system to the ultimate heat sink. The NSP-RSW system is seismically qualified and comprised of two redundant open loop divisions.

e) Compressed Air System, (Section 9.5.1.1)

   The compressed air system provides instrument air and breathing air to different safety- and non-safety related systems in the plant.

f) Chilled Water System

   The chilled water system supplies water to air conditioning and miscellaneous equipment, and provides sufficient cooling capacity during normal operation. The chilled water system

includes two separate systems, i.e. shared (between 2 reactor units) non-seismically qualified system serving non-safety/non-seismically qualified loads and a unitised seismically qualified system serving safety/seismically qualified loads. On loss of Class IV power, the shared non-safety chilled water system shuts down while the unitised safety chilled water system operates on Class III power provided by standby diesel generators. The seismically qualified chilled water system is a safety support system servicing safety loads.

g) Secondary Control Area (SCA)

A secondary control area contains monitoring and control capability to shut down the reactor and to maintain the plant in a safe shutdown condition following events that may render the main control room unavailable. Services are supplies to maintain environmental conditions suitable for operating staff and for equipment.

9.2 Water Systems

9.2.1 General Description

The systems utilizing raw water, from lake, sea, or other sources required for each station, include a condenser circulating water system as described in Chapter 10, a raw service water system, and a screen wash system.

The recirculated cooling water, fire protection, domestic water, demineralized water, and reserve water supply systems are supplied from fresh water sources. Other water systems include the drainage and chlorination systems. The fire protection system is described in Section 9.4 and the drainage systems in Section 9.5.2.

9.2.2 Service Water Systems

In ACR-700, service water systems consists of two independent process systems namely:

a) NSP service water system (NSP-SWS).

b) BOP service water system (BOP-SWS).

Both of the above service water systems include:

a) The NSP raw service water system (NSP RSW)

b) The NSP recirculated cooling water system (NSP RCW)

c) The BOP raw service water system (BOP RSW)

d) The BOP recirculated cooling water system (BOP RCW)

See the system flow diagrams for RSW and RCW (Figure 9.2-1 and 9.2-2) that accompany this technical description.

9.2.2.1 Design Bases

The NSP service water systems provide cooling water to safety related systems to mitigate and/or prevent the effects of accident conditions.

The individual flow requirements for these systems, and the NSP RCW system heat loads under normal and abnormal operating conditions with Class IV or III electric power supplies available, form the basis for the NSP service water systems design. Other systems, including the reserve water system, provide the essential reactor cooling function when the NSP RSW and/or NSP RCW systems are unavailable.

NSP RCW and NSP RSW system are required to be functional during and after a seismic event and are therefore designed to meet the following seismic requirements:

a) Seismically qualified to DBE Category ‘B’, in order to provide cooling to the RCW system.

b) Seismically qualified to DBE Category 'B', in order to provide cooling to the LTC system and the containment cooling system after a DBE.

The BOP-service water system is a non-safety and non-seismically qualified system meant for the turbine building (TB) users. BOP service water system consists of BOP raw service water system and BOP recirculated cooling water system.

9.2.2.2 System Description

9.2.2.2.1 Raw Service Water System

The NSP RSW system design is a 2 division system. The separate, redundant, safety related divisions are physically separated to minimize the possibility of a single failure or external event leading to unavailability of both divisions. Division 1 and 2 systems both operate continuously during both normal and abnormal reactor conditions. Each division normally handles one half of the plant heat removal load. Equipment is sized to ensure that, under accident conditions, one division is capable of handling the entire plant heat load. NSP RSW equipment on both Divisions is identical.

NSP raw service water in each unit supplies raw water to the recirculated cooling water system heat exchangers.

The NSP raw service water is supplied by pumps, located in the RSW pumphouse.

Provision is made for isolation to permit a pump to be taken out of service for maintenance work at any time.

The pumps are normally supplied with Class IV power, with backup from the NSP Class III to supply RSW to RSW/RCW HXs.

The pumps discharge into self-cleaning strainers. The strainers are automatically back-washed as pressure drop increases, and are provided with isolation and bypass valves.

A combination of design, materials and chemistry is used to control degradation mechanisms such as fouling and erosion.

Measures such as chlorination have been employed to control potential fouling in the water boxes. Features have also been incorporated in the system design to minimize water hammer.

The BOP raw service water system is a non-safety and non-seismically qualified system meant for the turbine building (TB) users. The BOP raw service water system is a once through system. It draws cooling water from the condenser cooling water (CCW) pump discharge duct (located in turbine building) through RSW booster pump. The BOP raw service water in each unit supplies raw water to the BOP recirculated cooling water system heat exchangers, located in the turbine building. The BOP raw service water system pumps are normally supplied with Class IV power, with backup from the BOP Class III.

9.2.2.2.2 Recirculated Cooling Water System

Primarily, NSP-RCW system design is based in the similar concept as RSW, i.e. 2 separate, redundant, safety related divisions. The physical separation of both divisions minimizes the possibility of a single failure or external event leading to the unavailability of both divisions.

Both divisions operate continuously during both normal and abnormal reactor conditions with each division normally handling one half of the plant heat removal load.

NSP-RCW system incorporates similar equipment on both divisions and the design concept ensures even distribution of plant cooling loads between the systems associated with both RCW divisions.

The NSP recirculated cooling water system is a closed loop of treated water, supplying cooling water to a large amount of equipment inside and outside the reactor building.

The NSP-RCW pressurization system consists of expansion tanks connected to the suction side of the RCW pumps. There is one expansion tank for each division.

The recirculated cooling water is cooled by heat exchangers arranged in parallel.

The heat exchangers are fabricated from materials that are acceptable for their process fluid. The fluid in the NSP-RCW system will be treated to provide a corrosion inhibiting film on carbon steel surfaces and maintain the pH within acceptable limits. Treatment includes filters installed in pump bypasses.

NSP-RCW makeup is demineralised water and it is provided by two RCW head tanks. The flow in the recirculated cooling water system is provided by RCW pumps.

The pumps are normally supplied with Class IV power with back-up from the NSP Class III to allow RCW supply to safety related loads.

The BOP-RCW system is also a non-safety and non-seismically qualified system meant to serve the turbine building (TB) users. The BOP-RCW system is supplied from the BOP Class III system. Under Class III operating conditions, BOP RCW only serves a few loads located in the TB.

The BOP recirculated cooling water system is a closed loop system and consists of RCW pumps, RSW/RCW heat exchangers, expansion tank and piping.

9.2.2.3 Inspection and Testing

Pumps, heat exchangers, strainers, and piping of the RSW (NSP & BOP) and RCW (NSP & BOP) systems are included within the in-service inspection and the functional testing program.

Leak monitoring shall be carried out in the systems by measuring flow to the RCW system from the RCW head tanks. This flow is equivalent to the make-up flow.

RCW flow are measured and transmitted to the MCR, where these can be monitored at regular intervals.

Leak detection inside the RB shall be monitored by the leak detection system. High leakage may indicate loss of water from the NSP-RCW system.

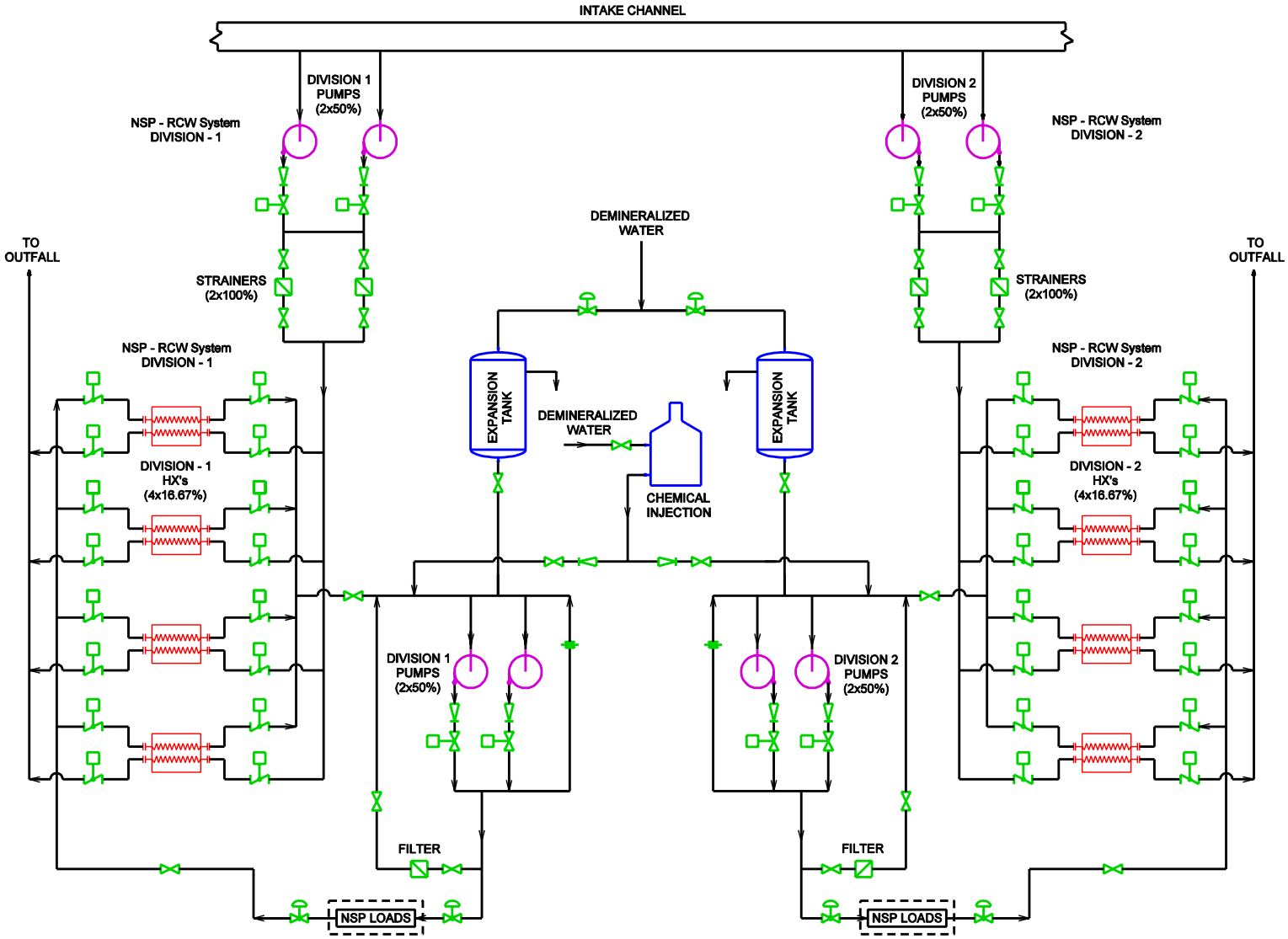

Figure 9.2.2-1 NSP Service Water Systems Flow Diagram

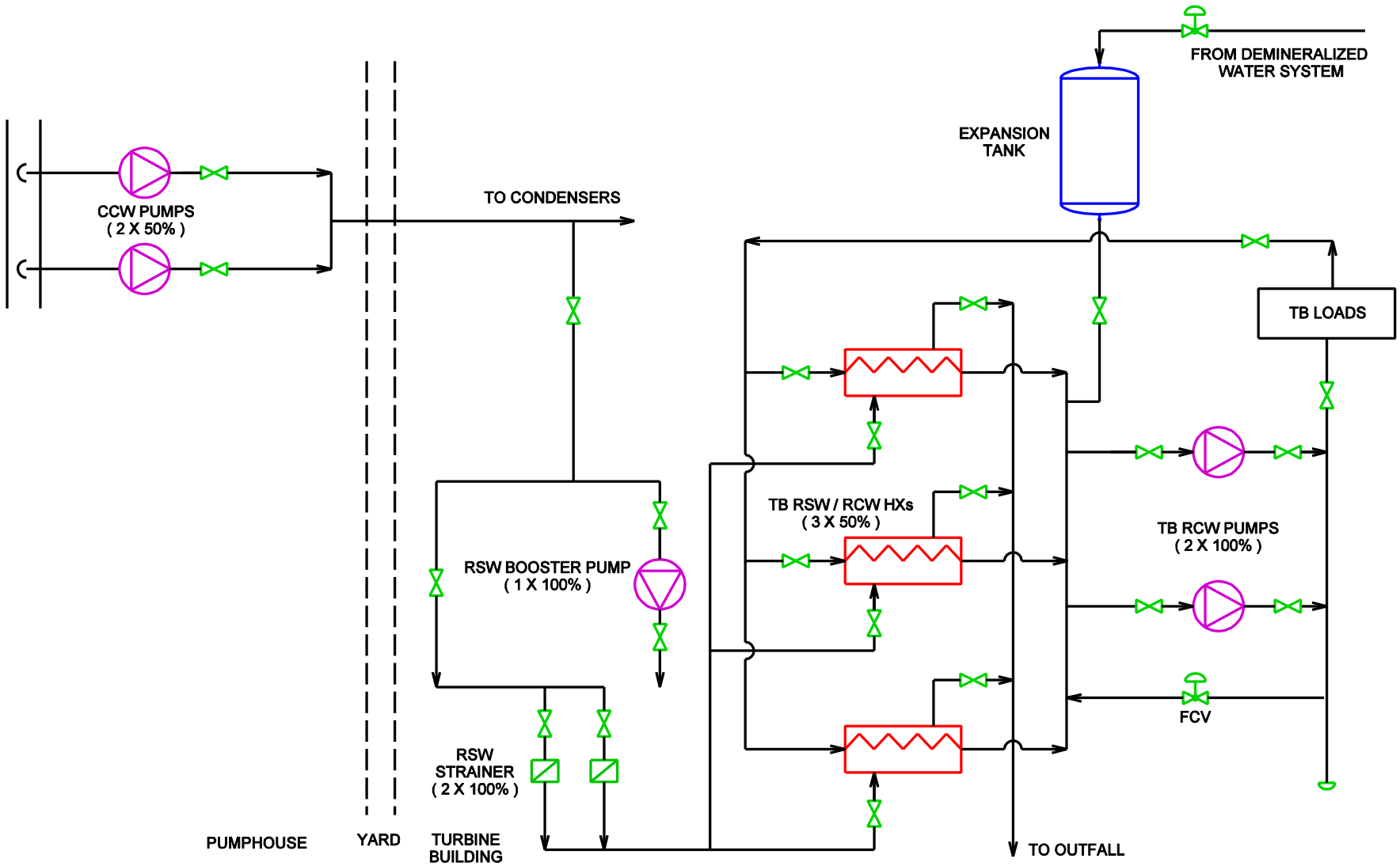

Figure 9.2.2-2 BOP Service Water Systems Flow Diagram

9.2.3 Demineralized Water System

The water treatment plant is designed to provide enough capacity for a two-unit ACR plant. The demineralized water is used for makeup to NSP & BOP RCW, LTC, condensate/feedwater, and to provide for the other miscellaneous uses.

The water treatment plant is in two sections: a pre-treatment section and a demineralizing section. The pre-treatment plant produces water for the demineralizing section and also for domestic water supply.

9.2.4 Domestic Water System

Domestic water is supplied to the system from the site domestic water supply, after pre-treatment.

There are no permanent hard connections made between the domestic water system and any systems potentially containing radioactive materials. Considering that the source and routing of the domestic water are all separated physically from other water systems used at the station, the potential for radioactive contamination has been avoided.

9.2.5 Chilled Water System

The chilled water system includes two separate systems:

a) A unitised, seismically qualified system

b) A shared, non-seismically qualified system

The chilled water system is a closed loop system that supplies chilled water to the various ventilation and air conditioning systems in the plant to the reactor, reactor auxiliary, turbine, service, maintenance and main control buildings; and to the coolers and condensers for D_2O vapour recovery system. LAC's inside RB receive chilled water only for non accident conditions.

The shared (between 2 reactor units), non-seismically qualified system services non-safety/non-seismically qualified loads and the unitised, seismically qualified system services safety/seismically qualified loads. The shared chilled water system is not seismically qualified except for the containment extension portion, which is seismically qualified to DBE Category 'B' for containment isolation valves. However, equipment and piping not seismically qualified are designed with suitable restraints to withstand the National Building Code of Canada (NBCC) seismic loads for Zone 2 or equivalent local building code. The unitised chilled water system on the other hand is seismically qualified to DBE level, Category 'B'.

The system is designed to provide chilled water to various users at a temperature of approximately 6°C (43°F).

The principle equipment for the non-safety shared chilled water system is located in the maintenance building whereas the principle equipment for the safety unitised chilled water system is located in the reactor auxiliary building.

The unitized chilled water system consists of two (2) centrifugal chillers, two (2) circulation pumps, one (1) chemical feed tank, one (1) expansion tank and two (2) distribution pumps, distributing chilled water to the safety loads in the reactor auxiliary building (including secondary control area), main control building and turbine building.

The shared chilled water system consists of four (4) centrifugal chillers, three (3) circulation pumps, one (1) chemical feed tank, one (1) expansion tank and three (3) distribution pumps, distributing chilled water to the non-safety loads in the reactor buildings, service building, maintenance building, reactor auxiliary buildings and turbine buildings.

The chilled water system is chemically treated to inhibit corrosion.

On loss of Class IV power, the shared non-safety chilled water system shuts down whiles the unitized safety chilled water system operates on Class III power provided by standby diesel generators.

9.2.6 Ultimate Heat Sink

The ultimate heat sink provides cooling water for the essential service water systems during power generation, normal shutdown and cooldown, and accident conditions. Sea/lake/river water is the ultimate heat sink when Class III and Class IV power supplies are available, and it provides suction to the service water pumps. The ultimate heat sink includes:

a) The NSP raw service water (NSP-RSW) system,

b) The NSP recirculated cooling water (NSP-RCW) system, and

c) The reserve water system.

The reserve water system is described in Section 9.2.7.

9.2.6.1 Design Bases

The following design bases apply to the ultimate heat sink:

a) The ultimate heat sink is capable of providing a continuous supply of cooling water to permit safe shutdown and cooldown of the plant following an accident.

b) The ultimate heat sink is a highly reliable source of cooling water capable of performing the safety function required during and after the following postulated design basis events:

   1) The most severe natural phenomena including the design basis earthquake (DBE).

   2) Non-concurrent site-related events such as transportation accidents, common mode failures such as station wide total loss of electric power, and a fire.

3) Any credible LOCA event followed by a site design earthquake (SDE) occurring 24 hours later.

c) NSP-RCW, NSP-RSW, and RWS as the ultimate heat sink, provide adequate essential service water to dissipate heat from the plant auxiliaries during normal operation and following a normal reactor shutdown.

9.2.6.2 System Description

9.2.6.2.1 General Description

NSP-RSW/NSP-RCW each consists of two separate, redundant, safety related divisions, physically separated, to minimize the possibility of single failure, or an event leading to unavailability of both divisions.

NSP-RSW/NSP-RCW systems provide heat sink when either Class III or Class IV power is available. The main cooling medium is raw water. The NSP raw service water system supplies raw water to the NSP recirculated cooling water system heat exchangers. The NSP recirculated cooling water system is a closed loop of treated water that supplies cooling to various plant loads and auxiliaries. Thus NSP-RCW/NSP-RSW heat exchangers remove all the heat loads that are ultimately rejected to the sea/lake water or diverted to cooling towers. The detailed descriptions for these systems are provided in Subsections 9.2.2.2.1 and 9.2.2.2.2.

The reserve water supply system provides the ultimate heat sink following a design basis earthquake (DBE) when Class IV and Class III power supplies are unavailable, and in addition to other functions, supplies emergency feedwater to steam generators.

9.2.6.3 Heat Loads

Class III power and the NSP-RCW/NSP-RSW systems are seismically qualified. When Class IV or III power is available, the sea/lake water is the ultimate heat sink using NSP-RCW/NSP-RSW and satisfies design heat sink requirements for non-seismic events. The NSP-RCW/NSP-RSW systems are also seismically qualified and provide ultimate heat sink during and after an earthquake event.

9.2.7 Reserve Water System

9.2.7.1 System Functions

The ACR-700 design includes a reserve water system with reserve water tank, shown in Figure 9.2.7-1. The tank, which is located at a high elevation in the reactor building, provides an emergency source of water to the containment sumps for recovery by the long term cooling system in the event of a LOCA to ensure net positive suction head for the long term cooling pumps. In addition, the tank provides emergency make-up water by gravity to the steam

generators (emergency feedwater), moderator system, shield cooling system and the heat transport system if required.

9.2.7.2 System Description

The reserve water tank, located at a high elevation in the reactor building, is a key component of the reserve water system. The tank is connected to the various systems by means of piping fitted with remotely controlled isolation valves.

First fill and subsequent make–up of the reserve water tank is via the demineralized water make-up line.

The reserve water system is a backup water system and hence is non–operational under normal circumstances.

The reserve water tank provides a passive light water make-up system since no external power is needed to transfer its inventory to the various potential users once the isolation valves are opened.

Specific functions of the reserve water system are discussed below:

a) Make-up to the heat transport system

   The reserve water system provides a backup supply of coolant following LOCA and loss of ECC. During normal operation, the tank is isolated from the heat transport system by means of a valve station with normally closed valves.

b) Feedwater to the steam generators

   In the event of a loss of main feedwater and auxiliary feedwater to the steam generators, the emergency feedewater will provide a heat sink to steam generators after they are depressurised. The reserve water tank provides emergency feedwater. The steam generators are fed by gravity after they have been depressurised.

c) RB flooding following LOCA

   On detecting LOCA the isolation valves in the line from the reserve water tank are opened to discharge the demineralized water conteners onto the RB floors of the fuelling machine vaults. This water together with the discharge from the HTS provides sufficient head for the long term cooling system (LTC) pumps for the long term recovery phase.

d) Make-up to the moderator system

   The reserve water system provides demineralized, light water makeup for severe accident management. The gravity fed moderator make-up from the reserve water tank is connected to the moderator head tank.

e) Make-up to the shield cooling system

The reserve water system provides demineralized, light water for severe accidents management. The gravity fed shield cooling system make-up for RWT is connected to the shield cooling system head tank.

9.2.7.3 Instrumentation and Control

Instrumentation for the reserve water system shall measure system parameters in the reserve water tank. Status indications and controls shall be provided for the motorized valves in the system.

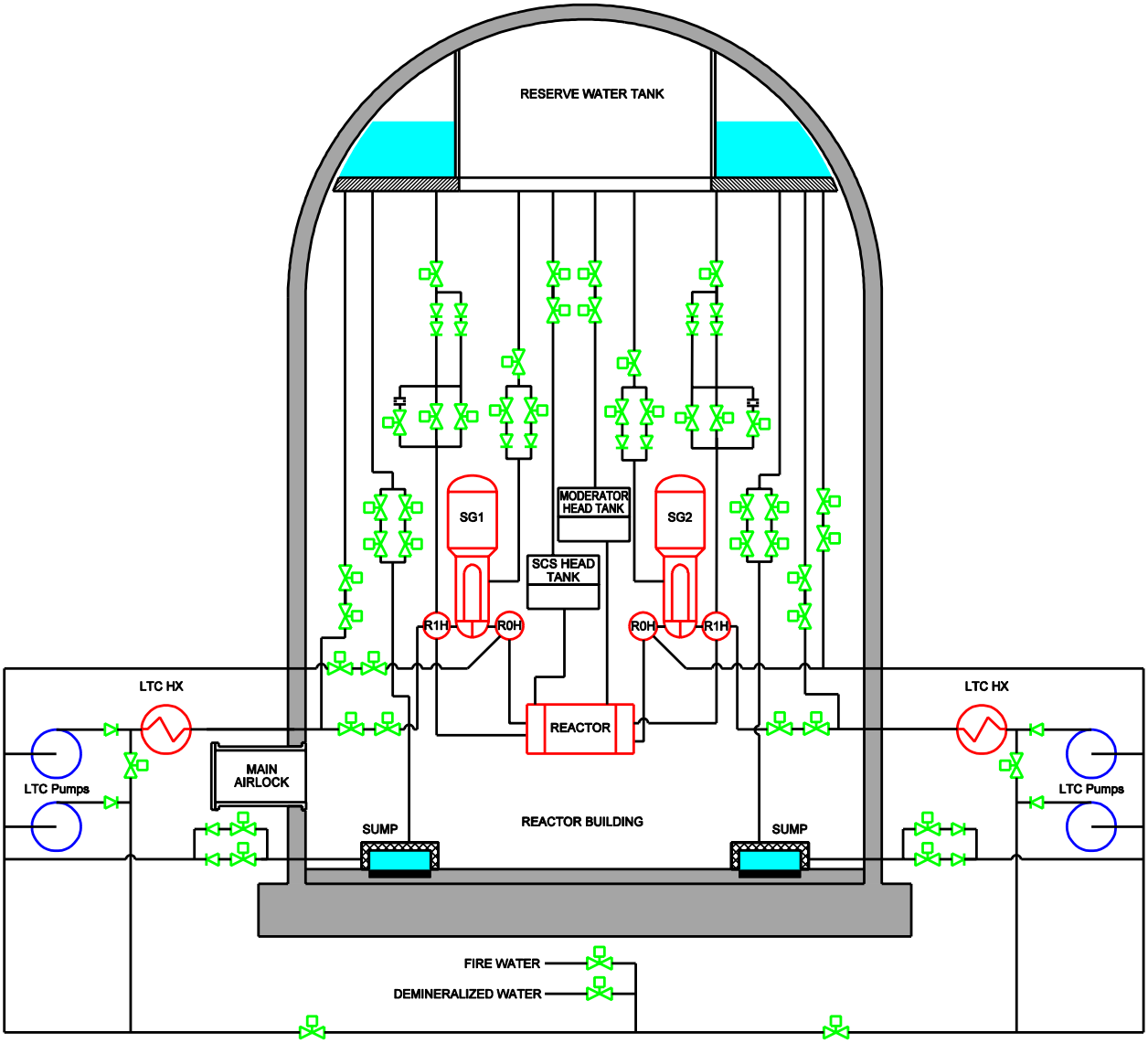

Figure 9.2.7-1 Reserve Water Tank

9.3 Fuel Storage and Handling

9.3.1 Introduction

The purpose of the fuel handling and storage system is to provide on-power fuelling capability at a rate sufficient to maintain continuous reactor operation at full power. The fuel handling system is required to store and handle fuel from arrival of new fuel at the station to storage of spent fuel in the spent fuel storage bay. The ACR-700 fuel handling systems arrangement is shown in Figure 9.3-1 The major equipment necessary to achieve on-power refuelling capability includes:

- The new fuel (NF) handling and storage equipment,
- The fuelling machines (FM), including head, bridge and carriage, and
- The spent fuel (SF) handling and storage equipment,

Together with their associated services and controls.

On-power fuelling, while operating at full load, is a major contributor to the high capacity factor of existing CANDU reactors. Other advantages of on-power fuelling include:

- Optimized burn-up of fuel and, therefore, lower fuelling costs;
- Less excess reactivity available which minimizes the requirements for reactivity control during operation;
- More flexibility to plan scheduled shutdown activities that do not have to include fuelling operations;
- Lower levels of fission products in the heat transport system, by early detection and removal of defective fuel bundles.

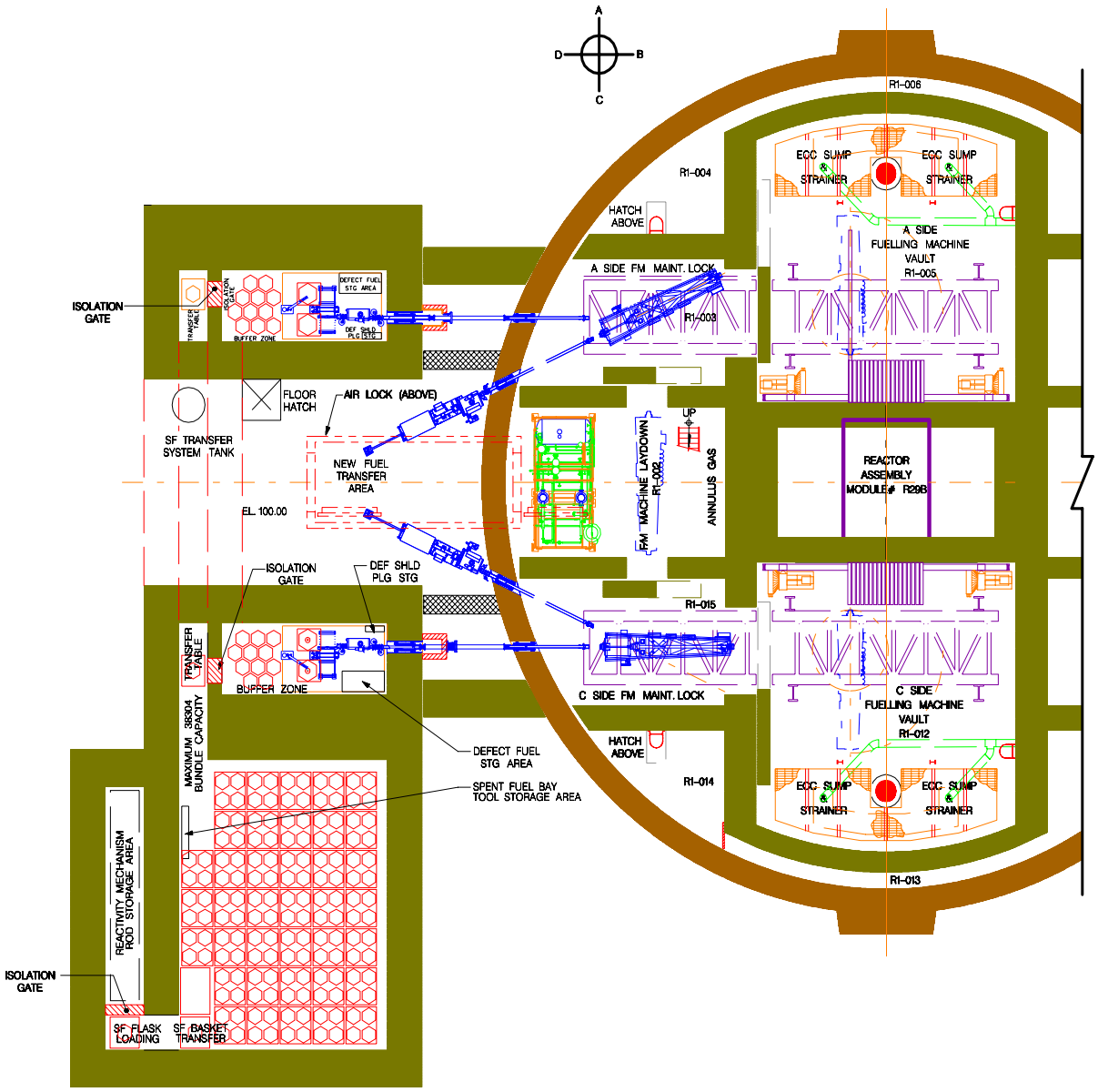

Figure 9.3-1 ACR-700 Fuel Handling Systems Arrangement

9.3.2 New Fuel Storage and Handling

9.3.2.1 Design Bases

- Storage and handling facilities have been provided to receive, store, inspect and transfer the new fuel.
- Fuel will be stored and handled in a manner that prevents criticality.
- New fuel is loaded manually into the new fuel transfer mechanism utilizing a local control panel, and then, utilizing remote controls from the control room, the fuel is loaded into the fuelling machine. The control is primarily automatic although manual control operation from the control room is also available.

9.3.2.2 System Description

New fuel, shipped to the station, is stored in a secure central storage room after unloading. The storage space accommodates the normal station inventory, and also temporarily stores the fuel for the initial reactor core load. Small quantities of fuel are moved to the new fuel transfer area as required. When required, the individual bundles are identified, inspected, and loaded manually into the magazine of the new fuel transfer mechanism.

Two new fuel (NF) transfer mechanisms are provided to supply new fuel to the two fuelling machines. Each mechanism consists of a totally enclosed magazine, a transfer ram and drive, a fuel loading ram and trough, a new fuel port, and a transfer pipe that connects the magazine to the new fuel port. Containment valves are provided at the new fuel port, and an isolation valve is provided between the new fuel magazine and the loading trough, to permit the loading of the new fuel magazine and transfer to the fuelling machine magazine without compromising containment (Refer to Figure 9.3-2).

The new fuel transfer system is provided with an inert gas supply and ventilation sub-system, to prevent the spread of contamination into the new fuel room area. When the new fuel transfer mechanism is inactive, or when new fuel transfer is in progress, a pressure slightly above reactor building pressure is maintained in the new fuel magazine. Just prior to, and during new fuel loading, a pressure slightly below atmospheric is maintained in the new fuel magazine, through a connection to the Reactor Auxiliary Building ventilation system. Any liquid, which accumulates in the magazine housing, is drained into the active drainage system.

A shield plug, located in the new fuel port, reduces the radiation into the new fuel area from the fuelling machine head should it contain spent fuel. Interlocks and radiation activated alarm signals prevent removal of the shield plug under this condition, even though new fuel loading is not normally carried out with spent fuel in the fuelling machine. The plug is removed from the port and stored in the new fuel magazine prior to the transfer of new fuel into the fuelling machine.

A local control panel is mounted on each new fuel transfer mechanism and provides a number of control functions: local controls for the loading of new fuel into the new fuel transfer mechanism magazine, and an operator permissive for the remote transfer of new fuel from the new fuel transfer mechanism into the fuelling machine magazine. The loading of fuel into the transfer mechanism is controlled by the local operator and can be performed either automatically with some manual intervention, or manually. The transfer of fuel from the new fuel transfer mechanism into the fuelling machine magazine is controlled by the fuel handling operator in the main control room, and can be performed with various degrees of automation, from fully automatic to manual; however, remote operations are interlocked with a permissive signal from the local operator.

9.3.2.3 Component Description

Major components in the new fuel handling and storage area are as follows:

9.3.2.3.1 Containment and Isolation Valves

Two full-bore containment valves isolate the new fuel port from the new fuel transfer mechanism magazine. These valves are kept closed except during new fuel transfer from the new fuel magazine to the fuelling machine, when they open to provide a smooth passage for the fuel. Limit switches are included to indicate when each valve is in the open and closed positions.

A full-bore isolation valve is provided between the loading trough and the new fuel transfer mechanism magazine. This valve is kept closed except during new fuel loading from the trough to the magazine, when it opens to provide a smooth passage for the fuel. Limit switches are included to indicate when the valve is in the open and closed positions.

Interlocks are provided to prevent the containment valves from opening if the isolation valve is not fully closed or the magazine pressure is low; and to prevent the isolation valve from opening if either containment valve or the loading trough lid is not fully closed.

9.3.2.3.2 New Fuel Transfer Mechanism Magazine

The transfer mechanism magazine assembly consists of a leak-tight housing, a rotor, and a drive unit. The magazine housing is a drum-like enclosure, with a connection to an inert gas system so that it can be maintained at a pressure higher than the maximum reactor building pressure when idle and during new fuel transfer from the new fuel magazine to the fuelling machine; a connection to the reactor auxiliary building ventilation system so that it can be maintained at a pressure slightly below atmospheric during new fuel loading from the trough to the magazine; and a normally closed connection to the active drainage system to remove any fluid accidentally transferred to the new fuel magazine from the fuelling machine. The shield plug, which is normally located in the new fuel port, reduces radiation streaming into the new fuel transfer room when the fuelling machine containing spent fuel passes the end of the new fuel port in the fuelling machine maintenance lock.

9.3.2.3.3 New Fuel Port

Embedded in the reactor building walls of the fuelling machine maintenance lock are the new fuel ports. The port is a tubular connection with one end fitting extending into the maintenance lock and the other end engaging with the new fuel port inner containment valve. When loading fuel into a fuelling machine, the new fuel port becomes the passageway for bundle movement from the fuel transfer mechanism to the fuelling machine.

9.3.2.4 System Operation

Once fuel has been moved into the new fuel transfer room, individual fuel bundles are unloaded. The bundle type is confirmed and then each bundle is carefully inspected with the fuel spacer interlocking gauge. Each bundle is checked to be free of damage or foreign matter prior to loading.

Loading of the fuel into the new fuel transfer magazine is divided into a series of steps, and each step is a permissive for the one following.

The transfer of fuel bundles from the new fuel transfer magazine to the fuelling machine magazine is normally performed under automatic computer control.

9.3.2.5 Safety Aspects

Criticality prevention is considered in the handling and storage of new fuel, using techniques such as fuel separation and neutron absorbers. Handling facilities are provided to avoid damage to the fuel bundles during manual loading into the ports. The loading area is heavily shielded and the new fuel port is equipped with containment isolation valves.

9.3.3 Spent Fuel Handling and Storage

9.3.3.1 Design Bases

The spent fuel handling and storage system has the following features:

- Discharge of spent fuel from the fuelling machine (FM) is by remote operation under automatic or manual control from the control room. Discharged spent fuel is assumed to include a very small percentage of defective fuel.
- The transfers of spent fuel from the fuelling machine are carried out under water. The transfer operation is remotely controlled, by automatic sequence, but with manual control available, if necessary.
- The spent fuel is discharged from the FM and passes through the reactor building containment wall to the storage bay.
- Radiation shielding and protection of personnel is provided at all times and is controlled by interlocks and alarms.

- Defective fuel is identified by a detection system prior to discharge through the spent fuel port.
- The isolation of defective fuel is a manual operation carried out underwater in the spent fuel bay.
- The spent fuel storage capacity is sized for at least ten years' accumulation plus one full reactor core discharge of fuel.
- The spent fuel storage system is designed with structural stability so as to avoid toppling of stacks, either during or after a seismic event.
- All underwater mechanisms and instruments can be removed for servicing without draining water from the bays.
- Fuel is handled and stored in a manner that prevents criticality.
- A standby cooling system is provided at all locations in the spent fuel discharge system to ensure that the maximum safe fuel temperature is not exceeded.

9.3.3.2 System Description

The spent fuel transfer and storage system is responsible for the transport and storage of spent fuel from the time it is discharged from the fuelling machine to the time the fuel is removed from the spent fuel bay in preparation for dry fuel storage. The system consists of a transfer system and a storage system.

There are two identical transfer systems (Refer to Figure 9.3-1). The system that services the A-side fuelling machine discharges its spent fuel into the A-side reception bay, and the system that services the C-side fuelling machine discharges into the C-side reception bay. One of the reception bays is walled off from, but connected to the main fuel storage bay. Fuel is transferred between the other- reception bay and the fuel storage bay via an underground, shielded tunnel.

The transfer system is comprised of mechanical assemblies working in conjunction with a process system to transport fuel from inside the reactor building containment to the spent fuel reception bay. The mechanical portion consists of a magazine, a discharge ram, and a spent fuel basket loading mechanism (Refer to Figure 9.3-3). The process system consists of pumps, a heat exchanger, a transfer pipe and numerous isolation valves. Each transfer system includes a transfer tube, but they share the majority of the process equipment (pumps, heat exchangers, valves, etc.). The fuel travels through the transfer tube from the maintenance lock in the reactor building to the transfer magazine, which sits in the spent fuel reception bay. The process system provides the circulating flow that pushes the fuel through the transfer pipe, while at the same time cooling the fuel.

9.3.3.3 Component Description

9.3.3.3.1 Spent Fuel Transfer Equipment

The transfer tube extends from the maintenance lock in the reactor building to the spent fuel reception bay. Dual full-bore valves at the reactor building end guarantee containment isolation, and a full-bore valve at the reception bay end provides isolation between the transfer pipe and the magazine of the spent fuel transfer mechanism. When open, these valves provide a smooth passage for spent fuel during spent fuel transfer from the fuelling machine to the magazine. The magazine is supported in the spent fuel reception bay and has its inlet side connected to the isolation valve. The magazine contains seven chambers: enough for a fuel channel's worth of fuel plus a spare chamber. The discharge ram is water operated. Each open end of the magazine tubes will align to the magazine discharge port as the basket loading mechanism is indexed from one position to the next. Each of the magazine tubes can hold two fuel bundles. A full-bore valve is attached to the magazine's discharge port and provides isolation between the magazine and the reception bay. When open, it provide a smooth passage for spent fuel as it is discharged from the magazine.

The motors that drive the various mechanisms are mounted on a support frame located just above the spent fuel bay. They are connected to the drives by long shafts.

The transfer tube and magazine are part of one leg of the process system. The connections to the process piping are at the transfer tube between the two full-bore containment valves in the reactor building, and at the transfer magazine at the reception bay end. Two centrifugal pumps (one pump is a standby) supply the flow (up to 25 kg/s) required to move the fuel through the transfer tube. A heat exchanger is provided, sized to remove the decay heat from an entire maximum power channel's worth of fuel. A number of motorized valves provide containment isolation. The majority of the process equipment is skid mounted.

Inside the tunnel that connects the A-side reception bay to the fuel storage bay, a trolley transports storage baskets between the two bays. The trolley is driven through a set of driveshafts by a motor located above the surface of the water.

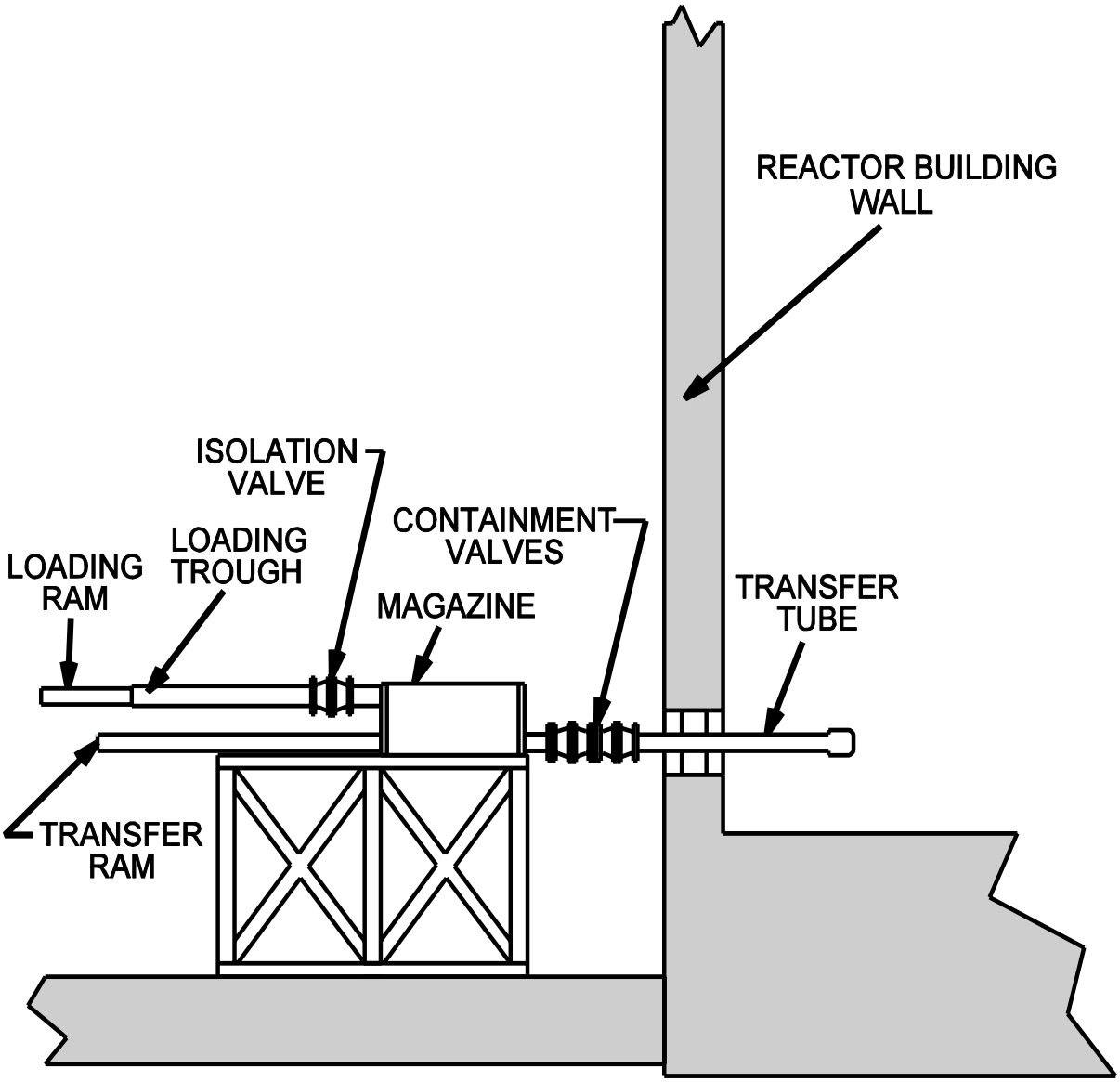

Figure 9.3-2 New Fuel Transfer Mechanism

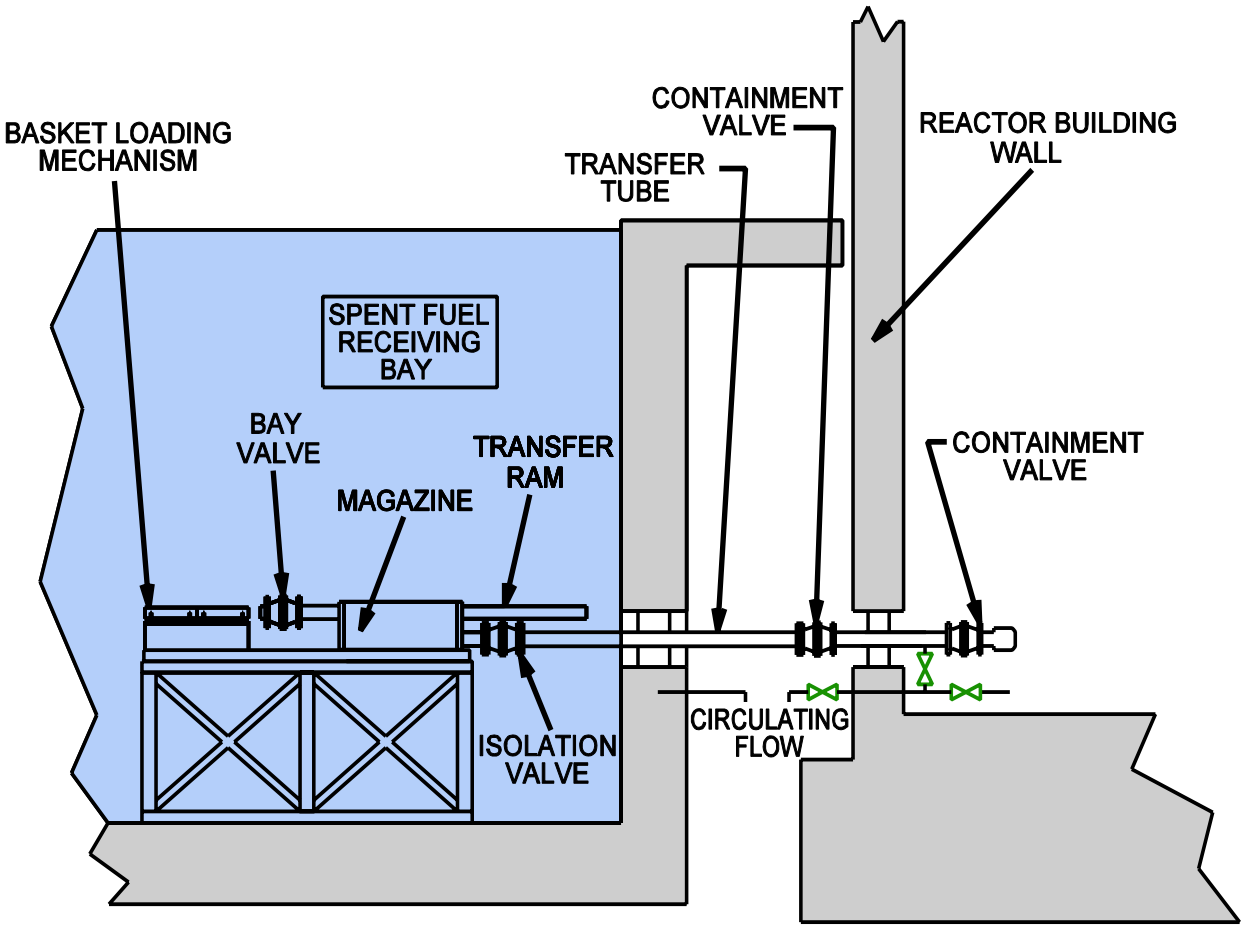

Figure 9.3-3 Spent Fuel Transfer Mechanism

9.3.3.3.2 Spent Fuel Storage Equipment and Tools

The storage system consists of baskets, stacking frames, a manbridge, and miscellaneous manual operated tools that are used to manipulate the fuel and storage baskets from above the bay.

- Storage Baskets and Frames

  Fuel bundles, discharged from the transfer mechanism, are loaded into baskets. The basket acts as a container for the fuel, providing mechanical protection, preventing criticality, and allowing for convective cooling by the water in the bay. The baskets are designed to be stacked, but require lateral support when stacked more than two high. The frames serve the function of lateral support for stacks of baskets.

- Tools

  A series of long handled tools and accessories are provided to facilitate the handling of fuel bundles and storage baskets. The tools are used to lift and stack the baskets within the supporting frames during their residency in the storage bay, as well as for underwater maintenance tasks. The long handles allow operators to carry out their work from the man bridge that operates above the bay.

- Manbridge

  The bridge is an above-water structure that consists of a runway for a monorail hoist, an under-slung walkway, and a hoist mounted on an electrically driven trolley. It spans the storage bay and runs the full length of the bay. It is designed, manufactured, and tested in accordance with the required loads and specifications.

9.3.3.3.3 Defective Fuel Handling Equipment

Defective fuel is retained in the spent fuel transfer magazine until the amount of off-gassing drops. In the spent fuel bay, the defective fuel is isolated from the remainder of the fuel and placed under a hood so that the fission product gasses can be directed to the off-gas management system.

9.3.3.4 System Operation

9.3.3.4.1 Spent Fuel Transfer and Handling System

The fuelling machine is attached to the spent fuel port. With the isolation valve on the magazine's discharge port closed, the isolation valve and containment valves at either end of the transfer pipe along with other containment isolation valves are opened, and one of the process pumps is started. Two fuel bundles are discharged from the fuelling machine into the transfer tube. As soon as the fuel enters the flow, they accelerate to flow velocity. As the bundle pair enters the transfer magazine, the bundles decelerate to a stop because the flow disperses after it enters the magazine. Once the fuel is in the magazine, the magazine rotor is indexed so that an empty chamber is aligned with the transfer tube. Once all the fuel is in the magazine, the process

pump is shut down, and the containment valves and isolation valve at either end of the transfer pipe and the other containment valves are closed. With these valves closed, the isolation valve on the magazine's discharge port is opened and the ram is used to discharge the fuel into the basket loading mechanism. While the valve is open, demineralised water is injected into the magazine and out the discharge port to prevent bay water from entering the magazine.

The basket loading mechanism transfers the two bundles that have been discharged from one magazine chamber, and loads them into two chambers of the basket. The process is repeated until all the fuel in the transfer magazine has been stored in the basket. Once the basket is full it is lifted using a long handled tool to an area of the reception bay designated as the buffer zone. The buffer zone is reserved for the fuel that has only been out of the reactor for a week. To ensure adequate cooling and shielding, and to avoid toppling during an earthquake, fuel baskets that are in the buffer zone are not stacked more than two high. The baskets are eventually transferred to the fuel storage bay and stacked within the storage frames. Stack height is defined both by seismic loads, thermal analysis, and by making sure that there will be sufficient level of water shielding above the top of the spent fuel bundles.

The spent fuel bundles are expected to be stored in the storage bay for at least 10 years prior to transfer to dry storage. Note that dry storage equipment including the shielded workstation and on site dry storage facility are typically outside the initial station supply scope but are typically contracted for at a later time. A shielded workstation will be required to be in-service to prepare the baskets full of spent fuel for dry storage before the storage bay becomes full to capacity. The first module of an on-site dry-storage facility will be required at the same time if the fuel is to be stored on site. Each filled storage basket would be lifted directly into a shielded workstation, which overhangs the storage bay. Once in the shielded workstation, the basket would be dried and then sealed inside a spent fuel canister, which is an unshielded container filled with inert gas. The canister would be placed inside a shielded dry-transfer flask, which would be used to transfer it to the on-site dry storage facility. A suitable route is provided for transporting this flask from the spent fuel bay area to the on-site dry storage facility. Once at the on-site dry storage facility, the canister would be removed from the flask and stored in the facility, and the reusable dry-transfer flask would be returned to the spent fuel bay area.

At some point, the canisters could be transported to a permanent spent fuel repository in flasks licensed for cross-country transportation. Provisions are made in the storage bay area to facilitate the equipment installation, and fuel handing associated with dry spent fuel storage.

9.3.4 Fuel Changing System

Fuel changing involves all equipment and activities that are required to transport fuel from the new fuel port to the reactor, load and unload fuel from the fuel channel, and to transport the discharged fuel from the reactor to the spent fuel port. This is performed with the fuelling machines.

The on-channel operations of fuel changing are performed with the flow. This means that the fuel is removed at the downstream end of the fuel channel and the new fuel is inserted at the upstream end. Two bundles are exchanged at every fuel channel visit. This is referred to as a

2-bundle shift because the fuel string is "shifted" downstream by two fuel bundle lengths. The two most downstream fuel bundles are discharged and two new fuel bundles are inserted at the upstream end. Since the flow is bi-directional through the core, each fuelling machine will handle either new or spent fuel, depending upon which channel is being fuelled.

9.3.4.1 Design Bases

- The fuelling machine head and its support structure will not cause failure of a reactor end fitting, pressure tube, or any of the fuelling machine pressure boundary components, which would result in a LOCA.
- The operation of the fuelling machine head and its support structure will not cause failure of any fuel port.
- Outside the reactor core, fuel will be handled in a manner that prevents criticality.
- 2-bundle shift
- Bi-directional fuelling
- Fuel changing is done using the channel flow
- Fuel changing is normally performed under automatic remote control.

9.3.4.2 System and Component Description

The on-power fuel changing equipment consists of two identical fuelling machine heads at the opposite sides of the reactor, with each head suspended on a carriage from tracks on a bridge that extends the full length of the fuelling machine vault. Vertical and horizontal traverse of the fuelling machine is provided to allow access to all the fuel channel end fittings. Powered shielding doors separate the reactor vault from the maintenance lock and, when closed, allow access to the fuelling machine in the maintenance lock while the reactor is operating. A process system supplies a flow of water to the fuelling machine that cools any irradiated fuel that is stored in the fuelling machine. An ancillary port allows access to the fuelling machine internals from behind a shielding wall. A rehearsal facility is used to practice on-power fuelling operations without opening up the heat transport system. All of this equipment is located within the reactor building. All power and instrumentation cable as well as process hoses are connected to the fuelling machine and carriage through a cable and hose management system.

9.3.4.2.1 Fuelling Machine Head

The fuelling machine head consists of four major assemblies: snout, magazine, separators, and ram. The snout is located at the front of the fuelling machine. It attaches and locks the fuelling machine to the fuel channel or the fuel transfer port, forming a leak tight seal. When the fuelling machine is not attached to the fuel channel or a transfer port, the snout is sealed with a snout plug. Separators are located between the snout and the magazine rotor. The separator is used to sense the passage of fuel bundles into the magazine, and to separate the fuel bundles that are required to be discharged from the remainder of the fuel string. The magazine contains a

multi-chamber rotor that can hold 12 fuel bundles, fuel channel hardware and fuelling machine hardware. The ram, located immediately behind the magazine, transfers fuel and hardware in and out of the fuel channel. In addition, the front end of the ram provides the articulation necessary for the installation and removal of the channel closure, the fuel support plug and the fuelling machine snout plug.

The snout, magazine and ram mechanisms are driven by redundant electric servo motors.

9.3.4.2.2 Fuelling Machine Bridge, Carriage, And Cable and Hose Management System

Two fuelling machine bridge and carriage assemblies are provided, one at each reactor face (A and C). The bridge spans the face of the reactor and it carries a carriage, which in turn supports the fuelling machine head (Refer to Figure 9.3-4). The weight of the bridge is supported by four fixed columns that are located at the four corners of the bridge. Each bridge structure is raised and lowered by two elevators that are driven up and down the columns by ballscrews. The vertical motion of the bridge provides the coarse 'Y' motion of the fuelling machine. With the bridge in its lowest position, the carriage-rails on the bridge are aligned with similar rails on the maintenance lock tracks, enabling the carriage with the fuelling machine head to transfer from the reactor vault to the maintenance lock.

The carriage has a rotation drive that allows it to rotate the fuelling machine 90 degrees so that it will fit inside the maintenance lock. The motions of the fuelling machine towards and away from the reactor or transfer port end fittings are accomplished with an axial drive (Z-drive). A very slow, short stroke vertical drive is provided for Y-position correction during the homing operation. The carriage is driven in fine pitch and fine yaw to correct angular misalignment between the end fitting and the fuelling machine snout.

The cable and hose management system consists of high-pressure hoses, and electric power and instrumentation cables that connects the fuelling machine and carriage to auxiliary systems. In order to accommodate the travel range of the fuelling machine, one end of the cable and hose system is fixed to a trolley that runs along the maintenance lock track and the other end is fixed to the fuelling machine carriage. There is an additional loop and cable track on the carriage that accommodate carriage rotation and 'Z' motion.

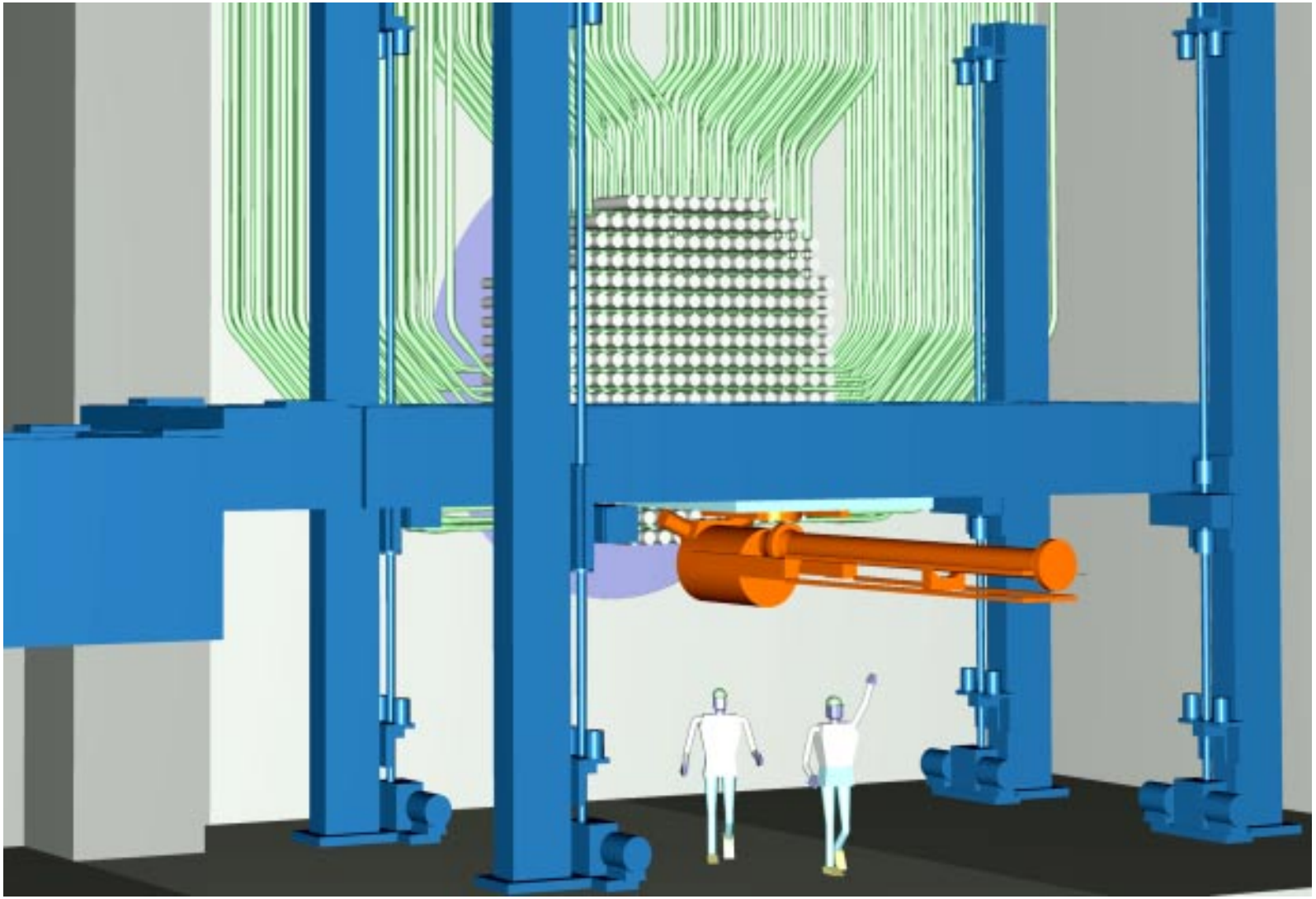

Figure 9.3-4 Fuelling Machine Vault – Fuelling Machine, Bridge, and Column Arrangement

9.3.4.2.3 FM Process System

The fuelling machine requires a supply of light water at temperatures of typically about 38°C, and at pressures that vary according to the function being performed. The requirements may be divided under the following general headings, namely:

a) Process system light water is used to control the magazine housing pressure. It also cools the spent fuel in the magazine.

b) Process system light water is used to fill the void in the ram housing created by the rams as they advance.

c) Process system light water provides injection flow into the reactor channel when the fuelling machine is attached to a reactor end fitting and the channel closure is removed. The injection flow keeps the fuelling machine components cool and relatively uncontaminated.

During on–power fuelling, the light water flow direction is always from the fuelling machine into the reactor channel. A reactor–grade light water supply is therefore provided for the fuelling machine head to prevent downgrading of the heat transport system light water inventory.

The fuelling machine light water system can be divided into two major sub-systems: the fuelling machine light water supply sub-system and the fuelling machine light water control sub-system.

The fuelling machine light water supply sub-system consists of a high-pressure supply valve station, a heat exchanger, centrifugal booster/circulation pumps, filters, a tank, and return pumps. There are provisions for alternate methods of supplying coolant flow to the fuelling machine, when off-reactor, in case of failure of the booster/circulation pumps.

High pressure is required only for on-power fuel changing operations. Pressurized light water is supplied from the discharge of the heat transport system pressure and inventory control pump. The water temperature is reduced to near ambient, and the booster/circulation pump increases its pressure to slightly above the reactor channel end fitting pressure. When the fuelling machine is not coupled to a reactor channel or transfer port, it is operated at ‘park’ pressure. ‘Park’ pressure is accomplished by supplying pressurized light water from the heat transport system pressure and inventory control pump, reducing its temperature to near ambient, and using the booster/circulation pump to provide flow.

When the fuelling machine is coupled to the spent fuel transfer port, the return flow is circulated in a closed loop of the fuel handling system. However, if required, water can be added to this closed loop from the heat transport pressure and inventory control (P&IC) system to increase the water inventory in the FM magazine. The fuelling machine booster/circulation pump provides flow to the fuelling machine at low pressure for spent fuel transfer. When the fuelling machine is coupled to the new fuel transfer port, circulating cooling water flow is not required.

The fuelling machine light water control subsystem consists of the fuelling machine light water valve station, related pumps, and fuelling machine head–mounted equipment. The fuelling

machine light water valve station contains control valves that control the flow of light water to the fuelling machine, and process instrumentation.

The piping that connects the fuelling machine to the light water valve station consists of stainless steel tubing and high-pressure hoses. The equipment, which is mounted on the head, includes pumps, process instrumentation, valves, and other flow–limiting devices, which isolate lines in the event of a hose failure.

An emergency water system supplies cooling to any spent fuel in the fuelling machine if the booster/circulation pumps are unavailable. The same system can also provide cooling to any spent fuel in the spent fuel transfer system if its circulation pumps are unavailable.

9.3.4.3 System Operation

The fuel changing sequence begins with one or both fuelling machines accepting new fuel from their respective new fuel ports where new fuel is pushed into the fuelling machine magazine from the transfer mechanism under remote control.

The details of this operation are given in Section 9.3.2.4. If not already open, the fuelling machine vault shielding door is opened and the fuelling machine bridge is lowered until it is at the same elevation as the maintenance lock tracks. The carriage travels along the maintenance lock tracks, and transfers to the fuelling machine bridge. The fuelling machine is rotated ninety degrees to face the reactor. The bridge is raised until the fuelling machine snout is at the correct elevation. The bridge brakes are engaged and the power to the bridge is removed so that inadvertent bridge movement is prevented. The carriage moves until the snout is in front of the target fuel channel. The fuelling machine is advanced until the front of the snout is over the end of the end fitting. Misalignment of the snout end and end fitting is corrected using the fine position drives.

The fuelling machines are advanced until they contact the end fittings. The machines attach and lock themselves to the end fittings forming a leak tight connection. The plugs from the snouts of the fuelling machines are removed and the machines are pressurized to about 345 kPa higher than the channel pressure in order to facilitate injection flow into the channel. The temperature of the fuelling machine process water is maintained at a lower temperature than that in the fuel channel and the injection flow is maintained to thermally isolate the fuelling machine from the higher temperature of the heat transport system and to prevent crud from the channel entering the fuelling machine. The fuelling machines then remove the fuel channel closure plugs and store them in the magazines. At this point injection flow is established.

The fuel support plugs are removed. As the downstream fuel support plug is withdrawn, the fuel string follows because channel coolant flow pushes the fuel string downstream. A pair of fuel bundles are separated from the remainder of the fuel string and stored in the magazine. The downstream fuelling machine then pushes the remaining fuel bundles back into the correct position in the core and replaces the fuel support plug. The upstream fuelling machine inserts two new fuel bundles and replaces the upstream fuel support plug in the fuel channel. Both channel closures are replaced and leak tests are performed.

The fuelling machines detach from the end fittings and are retracted away from the end fittings. The fuelling machines are either relocated to the next fuel channel to be fuelled or return to the maintenance lock. Once in the maintenance lock, the spent fuel is discharged into the spent fuel port. See Section 9.3.3.4.1 for details on spent fuel transfer.

The operation of the fuelling machine can be monitored by the operator in the main control room, via closed circuit TV cameras located in the reactor building.

9.3.4.4 Safety Aspects

Since the machines are operated remotely, personnel are not exposed to radiation during normal operations. Reliable operation of the machines is ensured by planned maintenance and overhauls. Appropriate programming of the remote operations makes damage to fuel or the heat transport pressure boundary very unlikely. Nevertheless, actions that have a nuclear safety, personnel safety or high economic impact are prevented by a system of interlocks.

9.3.5 Maintenance and Servicing

9.3.5.1 Normal Operations

Other than the fuelling machine bridge elevators (ballscrews) and their drive assemblies, all major fuel handling equipment, including the control equipment, is accessible for maintenance with the reactor at full power.

Powered shielding doors separate the fuelling machine maintenance locks from the fuelling machine vaults, providing a fully biologically shielded access area for minor maintenance of the fuelling machine and carriage while the reactor is operating at power.

Routine maintenance of the fuelling machines and ports is performed in the fuelling machine maintenance locks in the reactor building, with the shielding doors closed. This may include replacing components or modular sub-assemblies on the fuelling machine, or calibration of equipment. The fuelling machine carriage design facilitates removal of the entire fuelling machine to the fuelling machine maintenance area in the reactor auxiliary building. Lifting equipment and tooling in the fuelling machine maintenance locks aid in handling the sub-assemblies.

Major repair work on the fuelling machines is performed in the fuel handling maintenance area in the reactor auxiliary building. The fuelling machines are transferred to the maintenance area on a service cart. Space is provided in the maintenance area for facilities to check the operation of the fuelling machine including the ram assembly, separators and magazine rotor, etc.

The fuelling machine decontamination room is an enclosed area in the reactor auxiliary building capable of accepting a complete fuelling machine head or its major parts, for decontamination. The walls and floors of the facility are covered with moisture–proof coatings that are easily cleaned and decontaminated.

To remove a fuelling machine from the reactor building, the fuelling machine /carriage assembly is positioned in the associated fuelling machine maintenance lock, and the fuelling machine and cradle are lifted from the carriage and placed onto the fuelling machine head service cart. The cart with its cargo is then lifted to the airlock elevation, towed out of the reactor building via the main airlock, and taken to the fuelling machine maintenance area in the reactor auxiliary building.

An ancillary port between the fuelling machine vault and an accessible area within the reactor building permits replacement of channel closures and ram adapters in the fuelling machine head. A rehearsal facility comprising a representative fuel channel assembly and its end fittings passes through the reactor vault. Both machines can access the rehearsal facility, which is used to check fuelling machine operations for normal and other fuelling sequences.

Remote viewing equipment is provided for observing the fuelling machines when they are operating in the fuelling machine vault.

Other testing and calibration equipment is typically available in the fuelling machine maintenance facility as wells as in the reactor building fuelling machine maintenance locks.

9.3.5.2 Breakdown Operations

Suitable mountings for remote viewing TV cameras are provided. Normally, cameras are used to monitor the operation of each machine at the reactor face; however, facilities are provided to temporarily connect additional cameras at other locations to the communication system to aid breakdown operations.

9.3.6 Equipment Testing

9.3.6.1 General

All critical fuel handling equipment is subjected to strict functional tests prior to shipment to site. After installation at site, extensive commissioning tests of the integrated system conclude in a final acceptance test.

As an example, refer to Section 9.3.7.2.

9.3.6.2 Acceptance Tests of Fuelling Machine Heads

The fuelling machine heads are assembled and operated in a test facility under simulated reactor conditions with respect to temperatures, pressures, and flows. The test facility includes hot water loops and a full size fuel channel that is loaded with fuel bundles to represent the reactor. The tests include fully automatic fuelling operations using operational computer programs.

The results of the functional tests are documented in a formal laboratory test report.

9.3.6.3 Commissioning Tests and Acceptance Test

Commissioning tests are performed at site after installation of the equipment, to test the complete system when integrated with the reactor facilities. All functions of the system are checked, including some servicing and abnormal operation functions.

Following fuelling tests on a cold reactor, a final acceptance test is made on the system, during which fuelling operations are performed at significant reactor power to demonstrate the fuelling capability.

9.3.7 Fuel Handling Control System

9.3.7.1 General

The overall fuel handling control and display system consists of two main systems: the fuel handling control system (FCS) and the fuel handling operator interface system. The FCS handles the control functions while the FH operator interface system handles the operator interface functions.

The advanced operator interface of the FDS and the distributed nature of the FCS, with built-in diagnostics for easy troubleshooting and maintenance, contributes to reliable operation of the fuel handling system.

9.3.7.2 Control Console

The fuel handling operator interface system consists of the fuel handling display system, fuel handling operator's console and the fuel handling backup control panel.

9.3.7.2.1 Fuel Handling Display System

The fuel handling display system is part of the overall plant wide display system, but is functionally independent of the rest of the display systems in the unit control centre. The fuel handling display system performs the following functions:

- Displays fuel handling system status and other relevant information
- Facilitates full automatic control
- Facilitates semi-automatic control of individual sequences and mechanisms
- Facilitates manual operation of individual devices
- Provides relevant fuel handling information to plant operators via the plant display system
- Acquires and displays relevant plant information for the fuel handling operators.
- Alarms
- Transfers and retrieves historical data

- Logging and reporting

The display system is based on the same distributed computer architecture as the plant display system and uses the same hardware and software.

9.3.7.2.2 Fuel Handling Operator's Console

The FH operator performs all normal, abnormal, and emergency control operations from the FH operator's control console. The FH operator's console is a sit-down type of console with a number of video display units, data entry devices, and pointing devices. The console has separate partitions for each reactor side of the FH system. Dedicated display units are provided for control displays and alarm displays. The same video display units are capable of displaying closed circuit television images from the reactor vault and fuel transfer areas. The console also provides hard copy facilities.

The normal mode of control for the fuel system is automatic with the fuel handling operator in the main control room supervising the fuel handling operations via colour graphic displays on the fuel handling control console. Capability is also provided to allow the operator, on an interactive basis, to control operations either in a semi-automatic mode, or in a manual mode.

The manual mode allows the operator to exercise control over individual mechanisms including positioning to a setpoint and jogging in either forward or reverse directions.

A dedicated alarm interrogation facility is provided for FH alarms.

9.3.7.2.3 Fuel Handling Back-up Control Panel

The backup control panel provides safety-related control and monitoring functions in the event of a control system or display system failure. Portions of the panel will be seismically qualified. Once the problem has been corrected, operations can resume at the fuel handling operator's console.

9.3.7.3 Fuel Handling Control System

The fuel handling control system handles the control of fuel changing and fuel transfer operations in automatic, semi-automatic and manual modes.

The FCS contains the following components:

- Fuel handling distributed control system (FH DCS)
- Protective interlock system
- Seismic trip system

9.3.7.3.1 Fuel Handling Distributed Control System

The fuel handling distributed control system is based on current control technology and functions independently of the plant distributed control system.

The system configuration is based on the concept of distributed control. A separate subsystem controller controls each fuel handling subsystem. The subsystem controller handles all control functions required for the subsystem and includes motion control, logic control and PID (proportional integral differential) control. A dedicated controller is provided for the supervisory sequential control of fuel handling operations. The sequential controller co-ordinates the motion of the mechanisms through the subsystem controllers, while the actual motion control is carried out by the individual motion controllers.

The sequential controller and subsystem controllers are connected through redundant communication links to form a distributed control system. The control data and the fuel handling system status are sent to the fuel handling display system that provides the operator interface.

Each FH DCS partition includes an interface to the FDS. The interface performs the following functions:

- The acquisition of analogue and digital I/O and calculated data from the FH DCS
- Acquisition of diagnostic information from the FH DCS
- Transfer of control modes, setpoints, control commands, and mechanism calibration information from the FDS
- Alarm detection and transfer of alarm data to the annunciation system. The alarm data is also available for use in the operator displays, logs, and reports generated by the FDS

The FH DCS is provided with an engineer's work station (EWS) for system configuration, development and debugging of control programs, and to troubleshoot the overall system.

9.3.7.3.2 Seismic Trip System

A seismic trip system ensures that no undesirable control actions take place during a seismic event. This system continuously monitors the seismic activity. If a seismic event is detected, the system removes power to various drives of the FH mechanisms to ensure that they do not spuriously operate.

9.3.7.3.3 Protective Interlock System

The interlock system is divided into two parts: operational interlocks and safety interlocks. In this context, safety interlocks are all interlocks that protect against malfunctions that have a nuclear safety, personnel safety, or high economic impact. Some of the safety interlocks can be defeated by a set of bypass handswitches located on the back-up control console, which can be operated if necessary with the appropriate authorization. Unless defeated, the protective system interlocks are operative in both automatic and manual modes of operation.

9.3.7.4 Termination Rack

All connections to and from the fuel handling equipment pass through a termination rack located in the control equipment room.

9.3.7.5 Control Cables

Cables between some of the assemblies in the control system are supplied with connectors to simplify installation and reduce construction, commissioning, and maintenance costs.

9.3.7.6 Signal Voltages

Mechanisms on the fuelling machine and carriage are driven by electric motors. Machine performance is improved through the application of modern motion control technology and mechanism position sensors. The traditional potentiometers used for sensing position in earlier CANDU plants have been replaced by resolvers and linear variable displacement transducers (LVDT's).

9.4 Fire Protection System

9.4.1 Design Bases

The design of the fire protection systems and equipment ensures that the requirements for fire prevention, fire detection, suppression, and mitigation of the effects of fire are met. To achieve this objective, criteria have been established to prevent or mitigate fires so that the following safety functions can be maintained for all credible fires in the plant:

a) At least one of two shutdown systems shall remain available.

b) At least one division of systems or equipment shall remain available to remove decay heat.

c) Within the reactor building, fission products shall either be contained within the normal system boundaries or within the containment boundary to the extent that regulatory dose limits are not exceeded. For inventories of radioactive material outside the reactor building, fire shall not cause a breach of the system boundary containing such material or it shall be shown that the release is within allowable limits.

d) A control area and sufficient control equipment shall remain available and accessible to the extent that the safety functions can be performed and the status of the plant can be monitored.

e) In the support systems, sufficient systems or components shall remain available to provide essential services to maintain the required safety function.

f) Only one fire is postulated at one time.

g) Defence-in-depth is provided by redundancy in suppression methods.

h) Seismically qualified fire water supply shall be provided to the safety related systems and equipment that require a seismically qualified fire water system. These systems and equipment will be identified in the fire hazards assessment.

i) The fire water source provides adequate fire water to meet the needs of fire protection.

j) Reliable power sources, namely the Class IV power supply with Class III backup power, are provided for the fire water pumps.

k) Both central and local control is provided, with central control from fire panels in the main control room and local control panels throughout the plant.

In addition to compliance with broad design requirements, a detailed fire hazards assessment will be performed during the detailed design stage to identify fire hazards and evaluate fire risks for all plant areas.

The fire hazards assessment report provides the basis for the detailed design of the fire protection systems. The fire assessment methodology includes:

- Identification of combustibles
- Assessment of fire initiation and growth

- Assessment of consequence of fire

9.4.2 Fire Protection Design

ACR-700 is designed so that reliance is not placed on any single system, component, or function. This concept of redundancy is referred to as defence-in-depth, which is applied to fire protection design through:

a) Fire prevention,

b) Fire detection,

c) Fire suppression, and

d) Mitigation of the effects of fires.

There are a number of postulated initiating events whose effect would influence a limited area of the plant. These events are referred to as common-mode incidents, one of which is fire.

Application of these fire protection design concepts is summarized for each aspect as follows.

a) Fire Prevention

Defence-in-depth applied to fire safety requires fire prevention to be implemented by both engineering design and administrative control. Fire prevention is achieved, therefore, through limiting the use of combustible materials and by controlling ignition sources, which is achieved by containing combustibles in suitable enclosures or by treatment with appropriate fire retardant materials to minimize the hazard of ignition sources.

b) Fire Detection

The fire detection system is an integral part of the overall fire protection program in the ACR-700. This system performs the following functions:

- Notifies building occupants so they can evacuate,
- Summons organized assistance to undertake or assist in fire fighting, and
- Actuates fire suppression systems.

c) Fire Suppression

The ACR-700 fire suppression systems include both automatic fire suppression systems and manual fire suppression equipment. The methods of automatic fire suppression include wet pipe, dry pipe or preaction sprinklers, and deluge sprinklers. The manual equipment includes fire hoses and portable fire extinguishers. Similarly, the choice of fire suppression method for specific areas will be based on the assessment of fire hazards.

d) Mitigation

For mitigating the effects of postulated fires, the philosophy of physical and functional separation for systems, structures, and components has been implemented in the design for fire protection. This is implemented in the ACR-700 design by the separation of systems and

components by use of fire barriers, separation by open space, or a combination of both, to ensure that the most severe fire occurring within one fire area will not spread to another area.

9.4.2.1 Design Description

9.4.2.1.1 Fire Water Supply

The ACR-700 design features a non-seismically qualified fire water supply and an additional seismically qualified supply that provides fire water to safety related systems and equipment in both units.

The non-seismically qualified fire water system consists of two (2) 100% capacity vertical fire water pumps, two (2) standby 100% capacity pumps and a jockey pump to maintain system pressure. The fire protection system pumps are located in the dedicated pumphouse near the RSW pumphouse and will pump fire water to a buried ring header around the plant buildings to outdoor hydrants, standpipe and hose systems and sprinklers in the required buildings identified in the fire hazard assessment. The fire water pump capacity is selected to satisfy the largest user demand. Refer to Figure 9.4-1 for a simplified flow diagram. The fire water supply is site dependent as, this configuration is only feasible at a fresh water site. For a salt water site a fresh water reservoir containing a sufficient quantity of water to meet the greatest fire water demand will have to be provided.

Fire water pump operation is based on automatic start-up and manual shutdown. In normal operation, the jockey pump is running to maintain a nominal pressure in the fire water piping. One of the main fire water pumps starts automatically in response to a drop in pressure in the fire water piping due to an increased fire water demand. The main fire water pumps are operated from Class III power supply and are connected to separate buses.

The distribution of fire water to fire equipment shall be such that water can reach each connection to buildings from two (2) directions. The reactor building has a ring main header supplied by two fire water supply lines, the main fire water supply line from one side of the reactor building and the redundant seismically qualified fire water supply line from the other side. Water is supplied from this ring main header to the standpipe and hose system in the reactor building. Fire water is supplied to the turbine building by two connections to an internal ring main in each turbine building, to which the fixed fire fighting systems are connected. A branch connection from the buried main loop supplies water to the standpipe and hose station systems in other miscellaneous buildings requiring fire water.

The seismically qualified fire water system is designed to deliver fire water to the safety related users that require a seismically qualified fire water supply as identified in the fire hazards assessment. The system is qualified to DBE Category ‘B’. The system is supplied by the two seismically qualified 100% fire water pumps. The pumps are located in the RSW pumphouse, which also houses seismically qualified RSW pumps.

Instrumentation, annunciation, and control for the seismically qualified system are located in the main control room (MCR) and secondary control area (SCA). The seismically qualified fire

water pumps are controlled from MCR and SCA, automatically and by local control handswitches.

9.4.2.1.2 Fire Suppression in Reactor Building, Reactor Auxiliary Building and Turbine Building

Descriptions of fire suppression design are provided in this section for the reactor building, reactor auxiliary building, and turbine building respectively.

a) Reactor Building

Fire protection within the reactor building is ensured by portable fire extinguishers and a standpipe and hose system. Specific fire suppression systems in each area of the reactor building will be fully described in the fire hazards assessment. When the non-seismically qualified line becomes unavailable, the seismically qualified fire water line is used. This line is seismically qualified to DBE 'B'. The reactor building ring and the standpipe and hose system is also seismically qualified to DBE 'B'.

b) Reactor Auxiliary Building and Related NSPS Structures

Detectors with a central control room alarm and fixed fire extinguishing systems are provided in critical areas.

The reactor auxiliary building is provided with portable fire extinguishers, sprinkler systems and standpipe and hose systems. Where use of water cannot be tolerated, trolley mounted CO_2 extinguishers are provided.

Less hazardous areas inside the turbine and reactor auxiliary buildings are protected by portable extinguishers supplemented by fire hose cabinets.

The main control room and the secondary control area postulated fire assessment will be described in detail in the fire hazard assessment.

Protection of the exterior of all buildings and protection of equipment in the switchyard is provided by means of outdoor fire hydrants. Protection of the main and service transformers is by means of dry-pipe deluge systems. Smoke detectors are installed in conjunction with the above system.

Sufficient hose cabinets are supplied to enable any normally accessible areas to be reached by at least two water streams. In areas where water streams may inadvertently come in contact with live electrical equipment, the hose nozzles are capable of producing a water fog.

c) Turbine Building

The fire protection inside the turbine building comprises of the following:

- Wet pipe sprinkler systems
- Standpipe and hose systems
- Portable fire extinguishers

Sprinkler systems of the automatic/manual preaction type are used to protect such areas as the main and auxiliary feedwater pump room, turbine-generator block area, etc. Automatic/manual deluge type sprinkler systems are used for the transformer areas.

The remaining areas in the turbine building will be equipped with fire suppression systems based on the fire hazards assessment.

Fire barriers and/or spatial separation shall be provided throughout the ACR-700 plant to prevent the spread of fire. In addition to the major fire barrier locations between fire zones, internal fire barriers and/or spatial separation shall also be provide within specific areas to prevent the propagation of fire to other systems and in the case of shared systems to prevent the propagation of fire to the other unit. Locations of these fire barriers will be identified once the fire hazards assessment is complete.

9.4.2.1.3 Fire Detection and Alarms

The following types of detectors will be installed as required: heat detectors, ionization smoke detectors, photoelectric smoke detectors, very early smoke detection apparatus (VESDA) detectors, and flame detectors.

Criteria for the fire alarm system include the following:

- Audible and visible alarms are provided in the main control room.
- Means for announcing fire alarms are provided throughout the plant.
- Detection and alarm system is provided with an uninterruptible power supply.

Automatic actuation of suppression equipment is provided based on the following criteria:

- Fixed fire-extinguishing systems have automatic actuation.
- The operator can manually actuate the system if sufficient time is available.

Inspections and Testing

The following fire protection features are subjected to periodic tests and inspections:

a) Fire alarm and detection system
b) Automatic wet pipe sprinkler systems
c) Automatic/manual preaction sprinkler systems
d) Automatic deluge systems
e) Manual deluge systems
f) Carbon dioxide total flooding systems
g) Foam system
h) Fire pumps

i) Fire barriers (walls, fire doors, penetration seals, fire dampers, structural steel fire protection)

j) Manual suppression (fire hoses, hydrants, extinguishers)

k) Transient combustible locations to ensure that these are kept to a minimum and placed in the best location to prevent or limit a fire.

l) Instructions to fire fighters and staff concerning operation of fire protection systems, switching off machinery, and posting of clear directions regarding the use of manual/automatic systems.

The automatic deluge and water spray system shall be tested by physically actuating the system and verifying that all components perform as required with the gate valves closed. Each automatic sprinkler system may be tested at any time by using the inspector's test connection.

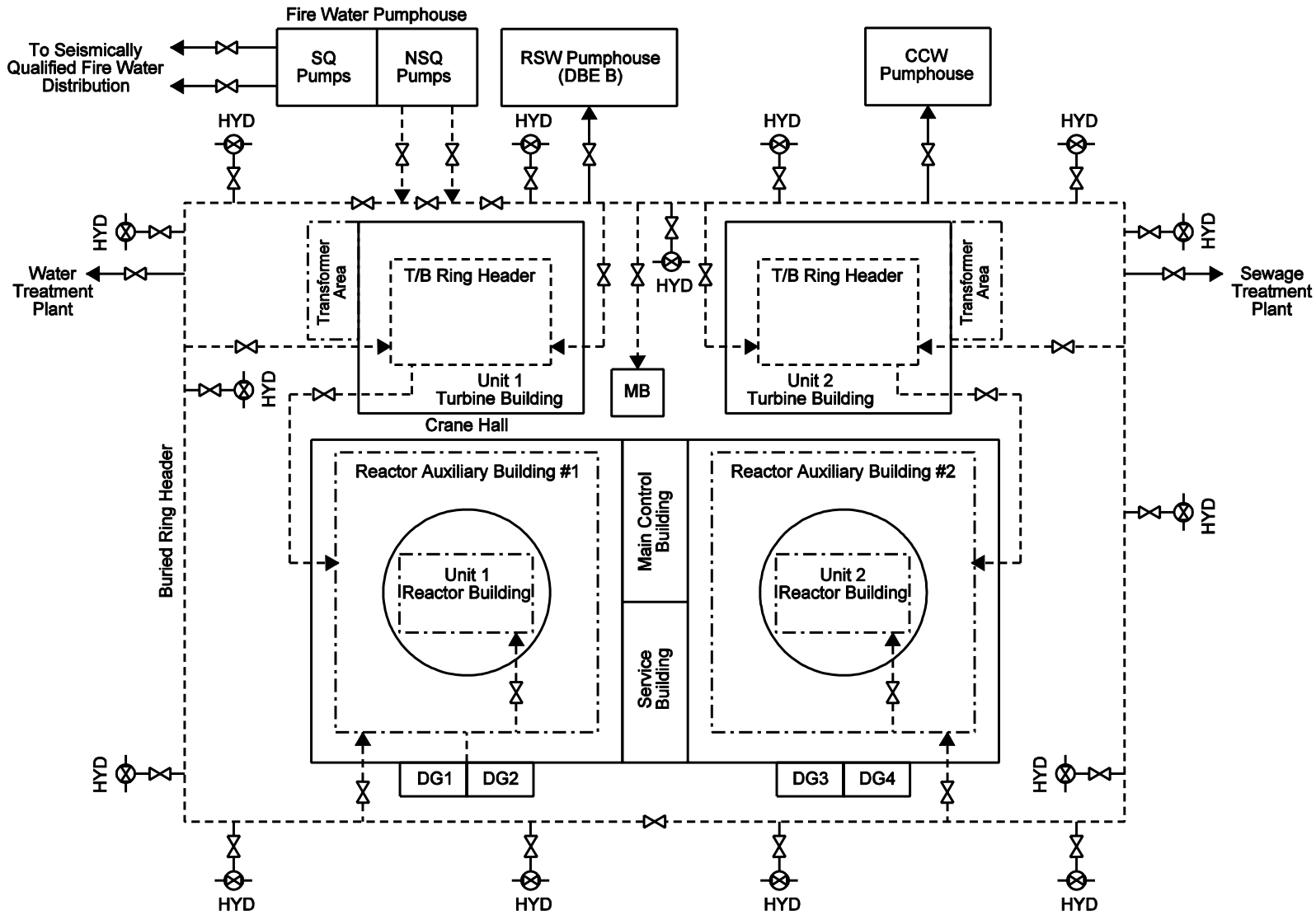

Figure 9.4-1 Simplified Flow Sheet of Proposed Two Unit ACR-700 Fire Protection System

9.5 Process Auxiliary Systems

9.5.1 Compressed Air and Gas Systems

9.5.1.1 Compressed Air System

The compressed air system is divided into the following three subsystems:

1. Service Air System
2. Instrument Air System
3. Breathing Air System

The service air system provides a source of compressed air for air operated tools during maintenance activities.

The instrument air system supplies compressed air for, air actuated valves, air lock seals, and various other uses.

The breathing air system is supplied to face masks and plastic suits for breathing and body cooling, for work areas that may contain airborne activity.

The instrument air system is classified as a safety support system. However, the service air and breathing air are not safety-related systems. Therefore, the instrument air system is a unitised system, whereas, the service air and breathing air systems are common, as well as shared between two units.

9.5.1.1.1 System Description

The instrument air system is a unitised system. There are four (4) compressors (two per unit) that supply the instrument air requirements. The compressors are used to compress the air from the initial pressure to a final pressure that will satisfy the operating pressure range of the various instruments. One compressor in each unit will operate with start and stop operation, depending upon the compressed air consumption. The second compressor will remain on standby. Refer to Figure 9.5-1 for a simplified flow diagram of the ACR-700 Instrument Air System.

Instrument air is dried to its dew point in a dual desiccant type dryer before it is delivered. Only one dryer operates at a time. Each dryer has two desiccant towers. Air is dried by passing through one desiccant tower while the other is being reactivated. The total airflow, after passing through the pre-filter that also acts as a water separator, passes through one drying tower and then divides into two streams: the main stream (approximately 80% of the flow), which leaves the dryer via the after-filter to feed the instrument air system; and the smaller stream (approximately 20% of the total flow), which is used to reactivate the other tower on the same dryer and then is released to the atmosphere. At the end of the cycle, the drying tower becomes ready for re-generation while the reactivated tower is dry and ready to start drying air. The valve switching functions (to start a new cycle by switching the air flow from the first tower to the

other one) are controlled such that the previously drying tower is now being reactivated and vice versa. The dry air produced by the dryer is filtered before discharging to the main instrument air receivers.

Standby power supply (Class III) to the instrument air compressors ensures an instrument air supply for essential services in the event of main plant power (Class IV) failure. Refer to Figure 9.5-1 for a simplified flow diagram of the Instrument Air System.

The service air and breathing air systems are shared between two units. Two (2) compressors will supply compressed air to the service air and breathing air systems. After passing through coolers and oil and moisture separators, the air from each compressor is discharged into individual air receiver tanks. The service air and breathing air distribution systems obtain air through connections to the common compressed air header.

Due to the air purity requirements for breathing air, the branch leading to the breathing air distribution system will pass through an additional purification filter set prior to discharging into a dedicated air receiver.

Refer to Figure 9.5-2 for a simplified flow diagram of the service air and breathing air systems.

9.5.1.2 Post-Accident Instrument Air Supply

The Canadian Nuclear Safety Commission (CNSC) requires that, “following an accident, it is possible to isolate all engineered sources of compressed air and other non-condensable gases leading to the containment atmosphere, other than those required for the operation of necessary equipment”. The normal instrument air supply to the RB is shut off approximately three (3) hours after a LOCA, once conditions have stabilised. This leaves time to put any fail as-is valves into their safe position. Several essential valves inside the RB will require air. Seismically qualified high pressure air bottles, located outside the RB, will be provided, as applicable. The essential instrument air users located outside the RB will still receive compressed air from the main compressors since they will not contribute to the pressurisation of the RB.

9.5.2 Drainage Systems

The drainage system of each station is subdivided as follows:

- Non-radioactive inactive drainage
- Radioactive drainage
- Sanitary drainage
- Rain water drainage

9.5.2.1 Non-Radioactive Inactive Drainage

The inactive drainage system collects and disposes waste water in various buildings (turbine building, waste treatment building, pumphouses, etc.). Waste water is collected in designated

sumps provided in the lower levels of the buildings. The waste water is discharged from the sumps either by gravity or by sump pumps, and disposed of outside of the buildings or treated where necessary.

9.5.2.2 Radioactive Drainage

This drainage system is also subdivided in relation to the degree of contamination of the collected effluent.

The reactor building active drainage system is present in each individual unit and used for recovering of liquid D_2O should heavy water spills occur. Samples dictate whether drain collection should go to D_2O clean up or to waste management.

9.5.2.2.1 Low Active Drainage

This system collects most Zone 2 effluent (service buildings: non-active laboratories and floor drains). This effluent is generally collected in the low active tanks and, after sampling, is normally discharged into the circulating water discharge conduit without treatment to remove activity.

9.5.2.2.2 Normal Active Wastes

This system collects most Zone 3 effluent (reactor building: excess water from ion exchange resin slurrying, floor drains; service buildings; decontamination centre; chemistry laboratories; and floor drains).

This effluent is discharged directly into the liquid waste management normally active tanks.

Floor drains located in normally accessible areas of the reactor building are connected in the basement to sumps, which are automatically pumped into the radioactive liquid waste management system.

The inactive, low active, and normal active wastes from floor drains are discharged by gravity either directly to the discharge conduit or into the waste treatment system. However, at times they may be drained into sumps provided for this purpose. They are then pumped to the discharge conduit or to the liquid waste treatment system. These sumps are mainly in the service building in places where the floor level is low.

9.5.2.3 Sanitary Drainage

This drainage transports the effluent from the washrooms to the sewage treatment plant.

9.5.2.4 Rain Water Drainage

This drainage collects rainwater from the roofs and discharges it into the subsurface site storm water drainage system. No contamination is anticipated.

9.5.3 H_2O/D_2O Sampling Systems

The HT (H_2O) and moderator (D_2O) sampling systems are used under normal plant operation condition for chemistry control.

The purpose of the sampling systems is to permit the operating staff to extract representative specimens of process fluids to evaluate the performance of various systems. A determination of the heavy water isotopic concentration, the concentrations of dissolved solids, suspended solids, and chemical impurities is required to permit the purification and chemical treatment systems to be operated to their maximum potential. In addition, a knowledge of system radioactivities is required, which assists in process and radiation protection.

To minimize the tritium hazard associated with sampling operation, sampling points are centralized whenever practical and are within well-ventilated fume hood sampling cabinets. The ventilation exhaust from the cabinet is routed to the active ventilation system for filtering and monitoring before discharge.

In general, five methods of sampling are provided:

a) Bulk sampling in which a tap is opened permitting the sample to flow into an open container, which is then capped.

b) Hypodermic sampling in which a hypodermic syringe is used to extract a sample through an impervious membrane. This system is recommended for all heavy water applications and is applicable for pressure up to 2 MPa(g) (290 psig). The advantage of this method is the avoidance of both tritium release and contamination of the sample.

c) High pressure canisters are used where it is desirable to have a sample at the original system pressure in order to prevent the escape of dissolved gases.

d) In certain cases, continuous samples are required for ‘on-stream’ analysis such as conductivity measurements or gas chromatography.

e) Crud samples are obtained by passing a process stream through a filter in series with a flow integrator for HT sampling system only.

The sample points have been located as close to the main stream as practical, in order to centralize the sampling cabinets. Short sample lines reduce the time lag between sample origin and sampling. However in some cases where the sample station is remote, a long length of tubing is run to the sample point and back either into the process system or to an acceptable collection system. This method is provided for a continuous, and therefore relatively representative, sample. A flowmeter is employed in these systems to provide a means of guaranteeing a representative sample. Flow integrators are used on crud samples.

9.5.3.1 Heat Transport Sampling System

9.5.3.1.1 Design Bases

a) To determine the effectiveness of the chemistry control programs and define corrective action.

b) To evaluate the performance of certain systems and system components (e.g. ion exchange columns, etc.).

c) To provide a representative sample from the HT system and its auxiliaries, safely and with minimal hazard to the operator.

d) To be able to measure and accept dissolved gas content and entrained solid (crud) in the samples.

9.5.3.1.2 System Description

The heat transport sampling system is designed to provide samples from the HT system and its auxiliaries. Samples may be obtained from the HT system circuit, H_2O leakage collection tank, and HT purification circuit. The system consists of sample coolers, pressure reducing valves, sample canisters, crud filters, hypodermic sample pots and associated piping, tubing, valves, and instrumentation, all of which are enclosed in a fume-hood type sample cabinet.

The samples are tested in the chemistry laboratory for pH, conductivity, chloride, tritium, lithium, dissolved gases such as hydrogen, oxygen and nitrogen, fission products (primary isotopes of iodine), and corrosion products.

One sample cabinet which houses sampling points for both liquid and crud samples is provided. A moisture beetle alarm is provided in the cabinet. Pressure-reducing valves are mounted on an adjacent rack. Liquid samples are normally collected from hypodermic sample pots. Where dissolved gas content is important, high pressure canisters are provided for sample collection and transport. Crud filters are supplied where entrained solid (crud) samples are required.

The HT sampling system is designed to give a representative sample by the use of flowmeters. The sample cabinet, pressure reducing valves, and coolers are installed to assist in providing a safe sampling system.

Connections to a gas chromatograph are also provided.

There is no source of overpressure within the system, as the system consists of sample lines with valve, hypodermic sample pots, crud filters, sample canisters, pressure reducing valves, and sample coolers. When there is flow, the pressure reducing valves prevent a pressure build-up within the system. Components that would experience a high pressure on closure of a downstream valve are designed for full system pressure and temperature. In addition to those, all sample inlet lines are protected from overpressure by each system from which the sample is taken.

The following instrumentation is provided for the heat transport sampling system:

a) Local indication of flowrate through each crud filter integrated over a period of time.
b) Local indication of flow of H_2O through the hypodermic sampling pots and sampling canisters.
c) Alarm H_2O leakage inside sampling cabinet using a liquid detector (beetle).
d) Local indication of inlet pressure to the pressure relief valve.

All system components are constructed of austenitic stainless steel.

The flow diagram of the HT sampling system is shown in Figure 9.5-3.

9.5.3.2 Moderator D_2O Sampling System

The moderator D_2O sampling system is designed to provide samples from the moderator and auxiliary systems. The auxiliaries include the moderator purification circuit, moderator deuteration/dedeuteration circuit, moderator D_2O collection system, and the moderator D_2O cleanup system.

9.5.3.2.1 Design Bases

The moderator D_2O sampling system shall satisfy the following functional requirements:

a) To determine the effectiveness of the chemical control programs and define corrective actions.
b) To evaluate the performance of certain systems and system components (e.g. ion exchange columns, etc.).
c) To provide a representative sample from the main moderator system and its auxiliaries, safely and with minimal hazard to the operator.
d) To be able to accept and measure dissolved gas content in the samples.

9.5.3.2.2 System Description

The system itself consists of a sample canister, hypodermic sample pots and associated piping, tubing, valves, and instrumentation, all of which are enclosed in a sample cabinet.

All the sample lines entering this system are protected against overpressure by the system from which the sample is taken. Also, since there is no energy producing source within any of the components in this system, no overpressure protection devices are needed, with the exception of the hydrogen sensor. This sensor is normally isolated from the system and the operating procedures protect it from overpressure.

Most samples are taken by inserting a hypodermic syringe through a neoprene disc into the sample pot. Where dissolved gases are important, high-pressure canister samples are taken.

These are connected to the sample line by quick-disconnect couplings. Flowmeters or indicators are included on all sample lines to indicate when the correct sample flow has been established.

The sample flow from the moderator system is continuously monitored for conductivity and dissolved hydrogen concentration. Hypodermic and canister samples can be taken as required. The sampling flow through the sampling circuit is monitored. The flow is then returned to the moderator circuit via the moderator purification system.

Sample lines provide input from the moderator purification system. Continuous conductivity measurements are possible for either the total flow from the four moderator purification system ion exchangers or, if necessary, any of the individual flows from the ion exchange columns, in addition to sampling the filter inlet. If desired, a hypodermic sample of the flow can be obtained.

The moderator deuteration system sampling facilities consist of a flowmeter, a densitometer, and a hypodermic sample pot. Although the deuteration process is controlled by the volumetric displacement of liquid within the system, it is desirable to check the isotopic content of the effluent water at key stages. This checking minimizes cleanup and upgrading costs. The densitometers provide approximate heavy water isotopic information.

Heavy water isotopic content of the fluid in the moderator heavy water collection tank is determined by a hypodermic sample pot. The sample stream flows from the collection tank outlet line, through the sample station and is returned to the tank. A bypass is provided with the sample pot, and the flow is monitored.

A liquid detector (beetle) with alarm in the control room is provided in the sampling cabinet to detect system leaks.

All system components are constructed of austenitic stainless steel.

9.5.4 Chemical Control of Systems

The water used in the moderator (D_2O) system, and the light water (H_2O) used in heat transport; the secondary side of the steam generators; the steam, condensate and feed water systems; the calandria vault; the closed recirculating cooling water system; and the spent fuel storage bays are all very high purity fluids to which no, or only certain specified chemicals, have been added.

Additions are made, where necessary, for such purposes as alkalinity control, oxygen control, and reactivity control. Thus, there are only a limited number of actual chemicals whose presence in the water is acceptable. The presence of any other chemical species represents the intrusion of an impurity. As soon as an unacceptable concentration of any such impurity is detected, its presence should be taken as an early warning that something is wrong. It is therefore essential to initiate the necessary work not only to identify the impurity (to assess its potential to affect the system in an adverse manner) and its source, but also to detail the maintenance and/or repair work necessary to eliminate the source.

The ACR process systems fall into two general categories: those to which an alkali is added to raise the alkalinity, and those to which no chemical addition is made but whose chemistry will be

affected by the in-situ generation of chemicals (e.g. nitrogen forming nitric acid in the moderator heavy water) or by absorption of gases (e.g. atmospheric carbon dioxide absorbed by the fuel bay water). Ideally, then, there should be a correlation among alkalinity/acidity, concentration of the alkali/acid, and the conductivity value for each liquid process fluid.

9.5.4.1 Design Bases

9.5.4.1.1 Heat Transport System Specifications for pH, Lithium Concentration and Conductivity

The specification values for pH are based on light water data for the control of deposition on fuel bundle surfaces. Figure 9.5-7 shows data for the solubility versus temperature for different pH (25°C) values. A minimum pH value of 9.7 is required to achieve an increasing solubility of magnetite with increasing temperature. Operation in light water with a 25°C pH value above 9.7 discourages deposition of system corrosion products on the fuel sheaths and is also the condition which minimizes the neutron activation of corrosion products. This, in turn, minimizes the specific activity of the corrosion product deposits on those heat transport surfaces which are outside the calandria and so minimizes the radiation fields from these parts of the heat transport system. Too high an alkalinity has to be avoided to minimize the possibility of any localized lithium hydroxide concentrations causing higher rates of local corrosion.

9.5.4.1.2 Heat Transport Specification for Dissolved Oxygen

The specification value for dissolved oxygen was chosen as < 0.01 mg O_2/kg H_2O due to a potential concern that oxygen-induced stress corrosion cracking could occur in the steam generator tubes in the areas in the tubesheets subjected to rolling.

9.5.4.1.3 Moderator System Specifications for pH_A and Conductivity

The use of gadolinium nitrate as both the neutron poison in the second shutdown system, and as a compensatory poison for the burn out or absence of xenon-135 during reactor start-ups, dictates the necessity for a slightly acidic moderator.

9.5.4.2 Design Description

9.5.4.2.1 Heat Transport System Chemical Control

The reactor coolant chemistry parameters have been chosen to minimize corrosion rates on all surfaces exposed to the coolant, and to reduce the movement of corrosion products to an acceptably low level. These objectives are achieved by maintaining low concentrations of dissolved oxygen (less than 0.01 mg O_2/kg H_2O), a high pH (between 9.7 and 9.9 when measured at 25°C, and by providing a purification loop which can, at maximum flow, reduce the concentration of dissolved and suspended species with a half-life of approximately 1 hour. The

HT components and structural materials are chosen to be compatible with the given chemical conditions.

The chemical composition of the reactor coolant is determined by sampling according to a regular schedule, thus ensuring that the necessary corrections can be made to the chemical composition so that it remains within the specified values.

Lithium, added in the hydroxide form, is used to control the pH.

Oxygen, from radiolysis of H_2O, is suppressed by adding sufficient hydrogen gas to the coolant to provide the driving force to reverse the radiolytic decomposition. Because of diffusion, the dissolved H_2 continuously escapes, so H_2 must be added periodically. The addition of H_2 is manually controlled.

Nitrogen is used as a cover gas to prevent corrosion when the heat transport system is partially drained for maintenance.

9.5.4.2.2 Moderator System Chemical Control

The chemistry of the moderator system is controlled by the moderator purification system.

The chemistry control parameters for the moderator system have been chosen for the following reasons:

a) To permit the use of both boron and gadolinium as soluble neutron poisons, as required for reactivity control, without the risk of gadolinium precipitation.
b) To maintain the moderator in a high state of purity and thus minimize the rate of radiolytic dissociations of the heavy water.
c) To maintain acceptably low rates of corrosion at the surfaces of the system.
d) To eliminate stress corrosion cracking of the stainless steel components of the moderator system.

The moderator components and structural materials are chosen to be compatible with the given chemical conditions. The pressure retaining components in contact with the moderator water are austenitic stainless steel and - zirconium alloy. The corrosion of these materials is negligible under operating conditions.

9.5.4.2.3 Steam Generator and Feedwater Systems

To protect the integrity of the Incoloy-800 steam generator tubes that separate the H_2O reactor coolant from the H_2O feedwater and steam systems, strict control of steam generator water and feedwater chemistry is required.

9.5.4.2.4 Other Systems

The control of chemistry in water systems is necessary to minimize corrosion. Some gaseous systems require control of possible flammable impurities. In summary, these other systems are controlled to meet the chemistry control specifications.

9.5.5 Annulus Gas System

9.5.5.1 Design Bases

The annulus gas system is designed to provide means for recirculating the annulus gas. The annulus gas system design shall meet the following requirements:

a) To provide a thermal barrier between the pressure tubes and calandria tubes to restrict heat transfer from the reactor coolant to the moderator.

b) To provide a dry carbon dioxide gas atmosphere in the annuli to prevent corrosion of fuel channel components due to excessive moisture.

c) To promptly detect moisture in the annulus gas system as an advanced indicator of a pressure tube and/or calandria tube leak. The detection of a potentially serious leak should be achieved in a timely manner from the start of the leak such that the length of the growing crack does not reach critical crack length at any stage during the cooldown and depressurization of the unit.

--9.5.5.2 System Description

The annulus gas system is a continuous recirculating system filled with “bone-dry” grade carbon dioxide and low moisture content (-40°C dew point). The carbon dioxide gas from high pressure cylinders located in the reactor auxiliary building is supplied at low pressure to the annuli between the pressure tubes and calandria tubes. The gas is required to be dry to prevent corrosion of fuel channel components. Provision is made for sampling the gas in the annulus gas system to measure residual moisture content by recirculating the annulus gas through an on-line dew point analyzer. Increasing or high moisture content would give an indication of leakage from the moderator or heat transport circuit into the annulus. The system maintains a positive pressure in the annuli under normal operating conditions.

The outlet tubes are connected to visual leakage indicators. The drain lines from the indicators are connected to a common line to a leakage collection tank. This line contains moisture sensing elements. Two redundant hygrometers are provided for more reliable indication of the dew point with an indication and an alarm in the control room on high dew point measurement. An alarm is also provided in the control room on high rate of rise of dew point in the annulus gas system.

A schematic of the annulus gas system, Figure 9.5-4, shows the system configuration.

The chemistry controlled medium in the annulus minimizes deuterium/hydrogen uptake by the pressure tube from the annulus gas system, thus reducing potential for pressure tube failure due to formation of hydride blisters.

The system pressure and temperature are monitored.

The gas cylinder pressure is alarmed in the control room on low pressure, warning of spent cylinders. Alarm annunciation for the presence of moisture in the system is also provided.

The system is protected against overpressure by the relief valves, and by the small-bore tubing, which restricts pressure rise in adjacent annuli in the event of failure of a fuel channel pressure tube. The relief valves have been selected to cater for pressure increases due to regulator failures, and to improve setting of delivery pressures.

Moisture levels can build up in the annulus gas as a result of ingress of hydrogen into the AGS and the formation of H_2O in the AGS, which leads to the simultaneous presence of moisture, carbon dioxide, and trace levels of other species.

9.5.5.3 Component Description

9.5.5.3.1 Leakage Flow Indicator

The flow indicators are essentially rectangular section stainless steel tubes with glass viewing windows on the two vertical sides. Leakage is observed by shining a light through one window and visually observing through the other.

9.5.5.3.2 Heat Exchanger

An air-cooled natural-circulation heat exchanger is provided to cool the gas during purging and to prevent damage to the concrete from overheating at the vault penetration.

9.5.5.3.3 Compressors

Three compressors with necessary instrumentation and controls are provided to recirculate the CO_2 gas through the system. A filter is installed upstream of the compressor to remove any debris in the gas. The recirculation is required to read the dew point of the CO_2 continuously and annunciate if a leak develops.

9.5.6 Shield Cooling System

The calandria vault and end shields protect the fuelling machine vault from direct radiation from the reactor, and as a result, nuclear heat is generated within these shields.

Heat is also transmitted to the end shields from the heat transport system by conduction through the end fitting bearings, by conduction and radiation across the annular insulating gap between the lattice tube and end fittings, and by convection and radiation from feeders. Heat is also

added to the water in the calandria vault by conduction through the calandria walls from the moderator.

9.5.6.1 Design Bases

The shield cooling system removes heat from the end shields and calandria vault to maintain the nuclear heat balance in the ACR-700, it provides biological shielding for protecting operating and maintenance personnel from exposure to excessive levels of radiation, and it continues to operate during initiating events (IE) defined in the probabilistic safety assessment (PSA) for the ACR-700.

The shield cooling system is designed to:

a) Remove nuclear heat generated and accumulated in the calandria vault structure and in the two end shields, in order to maintain the temperature differences between the calandria side and fuelling machine side tubesheet within acceptable limits.

b) Remove heat from the end shield to maintain them at an acceptable temperature.

c) Remove heat from end shields in the steel ball region, and control temperature differences between the calandria inner and outer tubesheets within acceptable limits.

d) Maintain the end shields and the calandria vault wall full of water at all times to provide biological shielding during normal operation and shutdown conditions.

e) Serve as an alternative heat sink in case of a severe core damage accident in which the pressure tube makes contact with calandria tube or in case of pressure tube/calandria tube rupture.

9.5.6.2 Design Description

The heat is removed from the shield assemblies by circulating demineralized water through them and then transferring this heat to the low pressure recirculated cooling water system by means of heat exchangers.

Inlet temperatures to the calandria vault and end shields are controlled by modulating recirculating cooling water flow through the heat exchangers to maintain the process water temperature setpoint for cooling water flow into the calandria vault and the end shields. The main temperature control loop for the shield cooling system will be the monitoring and control of the shield cooling water temperature exiting the heat exchanger in operation. A temperature transmitter on the shield cooling water feed stream to the end shield/calandria vault will control the temperature control valves on each RCW loop for each heat exchanger to control the RCW flow. Temperature transmitters will also be required for monitoring and control of the inlet and outlet shield cooling water temperatures for the end shields and calandria vault.

An ion exchange column is provided between the heat exchanger discharge and the pump suction header for system purification. The ion exchanger is provided with shielding since system activation products will accumulate in the ion exchange resin. Shielding above the enclosure is

removable in case access to the column is required. Valving on the resin and demineralized water lines connecting to the column is located outside the shielded enclosure.

The level of light water in the calandria vault is monitored and controlled based on the water level in the expansion tank located at a higher elevation than the top of the calandria vault.

Restriction orifices will be used for main system flow into the end shields.

The suction and discharge pressures for the shield cooling pumps will be monitored, as well as the pressure differentials across the ion exchange column and strainer, and the temporary commissioning strainers.

9.5.6.3 Component Description

The shield cooling system consists of two pumps, two plate type heat exchangers, an expansion tank, and a purification loop.

An expansion tank is located in the reactor building for level control of water in the calandria vault. The expansion tank is provided to ensure sufficient water inventory is available in the system. The expansion tank is directly related to the calandria vault water level. A control valve is provided near the tank for demineralized water make-up supply to the system. The tank location is selected to maintain the water levels for the various operating conditions, within the tank. The tank is equipped with the fittings for overflow, to reactor building active drainage, and inlet flow from the demineralized water system for system make-up.

Ion exchange purification is provided to remove circulating corrosion products that may be neutron activated, to remove any undesirable impurities that may be introduced from the make-up water supply, and to maintain proper pH. Provision is made for sampling from the main circuit and the purification loop to evaluate the performance of the ion exchange resin. Provision is also made for batch addition of lithium hydroxide for pH control and hydrazine for oxygen control.

9.5.7 Resin Transfer System

The resin transfer system is designed to transfer ion exchange resins by means of a slurry. Activated spent resins are transferred to the spent resin storage tanks from the ion exchange columns. Fresh resins are slurried to the columns.

9.5.7.1 Design Bases

a) To provide a means for the remote handling and transfer of spent resin from potentially active operating purification systems (i.e., heat transport purification system, shield cooling system, spent fuel bay purification system, radioactive liquid waste management system, and the D_2O clean-up system) to the spent resin storage tanks.

b) To provide for transfer of new replacement resin to the purification systems (i.e. heat transport purification system, moderator purification via the deuteration system, shield cooling system, and spent fuel bay purification system).

c) To provide for the resin beads to be re-suspended and slurried from the spent resin storage tanks.

d) To control the flow of demineralized water when transferring fresh or spent resin.

e) The spent resin transfer lines will be provided with adequate shielding.

9.5.7.2 Design Description

The fresh resin transfer system consists of a hopper, a transfer tank, and associated piping to supply demineralized water to the resin transfer tank and slurry the resin tank contents to any one of the receiving systems. A flexible hose is employed to connect the transfer tank to one of these transfer lines.

Resin is transported, within the system, by a flow of demineralized light water. Demineralized water is used to slurry the resin in order to prevent contamination or degradation of the fresh resin and to reduce activity release from the spent resin. Demineralized water is admitted to flush spent resin from the heat transport purification system ion exchange columns, and directly from the ion exchange columns D_2O cleanup system, the spent fuel bay system, the shield cooling system and the radioactive liquid waste system. The slurry discharged from the tanks is carried by piping to the spent resin storage tank.

The system is designed to withstand pressure equal to that of the highest rated interfacing system. There are no sources of pressure or heat within the resin transfer system. Normal operating pressure will be that of the demineralized water distribution system. Since the connected systems are pressure controlled, no overpressure protection is provided for this system. Since the resin transfer tank can be isolated, it is protected from overpressurization by its own relief valve.

All system components and piping are constructed of austenitic stainless steel.

The resin transfer system is connected to the process systems only during planned resin transfer operations.

For fresh resin transfers, a defined quantity of resin is added to the resin hopper and flushed into the transfer tank using demineralized water. The transfer tank is pressurized by admitting demineralized water until water comes out the vent. The hose is then connected to the desired process system. The operator must ascertain that the process is ready to receive the resin and a clear disposal line is available to dispose of the slurry water with the aid of a sight glass. The actual transfer is then made.

The spent resin is transferred in a similar manner. It is required to flush the lines after a resin transfer. The spent resin tank should normally be left open to receive resins. Transfer of resins

must be co-ordinated through the control room since transfer of resin can be done only for one system at any given time.

9.5.7.3 Component Description

9.5.7.3.1 Resin Hopper

This stainless steel hopper is arranged on a mezzanine over the resin transfer tank. A platform is provided just below the hopper to facilitate the unloading of resin into the hopper. The hopper is strong enough to support the weight of a 70 kg bag of resin (150 lb). A grating is installed in the hopper to prevent any tramp material over 1.3 cm (1/2 inch) cube from entering the hopper discharge.

9.5.7.3.2 Resin Transfer Tank

This stainless steel pressure vessel is designed to take full pressure of the demineralized water system. The tank has a dished head and a conical bottom.

9.5.8 Deuteration System

Deuterated ion exchange resins are used in the moderator purification system to remove corrosion products, ionic impurities and liquid poisons which are injected into the moderator for reactivity control purposes. As-received ion exchange resins are used in the heat transport and fuelling machine purification systems to remove corrosion products, ionic impurities, and some fission products.

The resins, when received from the supplier, contain about 75% by weight ordinary water (H_2O). If the resins were used in the as-received condition, the H_2O would downgrade the heavy water. To avoid such downgrading, the H_2O is replaced by D_2O in a deuteration process for the moderator resins. Deuteration is the replacement of H_2O in the resin by D_2O in a slow upward flow of D_2O through the resin bed. During the deuteration process, some heavy water is downgraded. This water is collected and upgraded for further use.

9.5.8.1 Design Bases

The deuteration system is designed to satisfy the following requirements:

a) Accept fresh resin from the resin transfer system into the deuteration tank, and deuterate it with D_2O.

b) Transfer deuterated fresh resin from the deuteration tank to any of the associated purification ion exchangers.

c) Perform the deuteration processes with a minimum amount of heavy water downgrading and with as short a commitment of operation time as is practical.

d) Make adequate provisions to prevent:

1) Inadvertent addition of light water to heavy water.
2) Accidental discharge of heavy water to the active drainage and radwaste system.
3) Exposure of personnel to loose contamination and the radiation emanating from the spent resin.
4) Exposure of personnel to tritiated water.

e) Make adequate provisions to prevent overpressurization.

9.5.8.2 Design Description

The deuteration system consists of a deuteration tank, a resin transfer pump, a D_2O head tank, sample pots, and the valves, strainers, instruments, piping, and fittings necessary to complete the systems.

Generally, manual valves are used throughout these systems. The exceptions are the inlet valve to the D_2O head tank, and the control valve in the outlet line from the deuteration tank and the containment isolation valves.

The deuteration of fresh resin can be performed manually and automatically. Both procedures of operation are similar. The manual operation of the system is commonly used.

Fresh resin is transferred from the resin transfer tank by slurry techniques using demineralized H_2O. Transfer is complete when resin is no longer visible in the sight glass at the deuteration tank. The D_2O head tank must be filled, if it is not already filled.

The procedure has a number of stages, defined by the D_2O isotopic of the water exiting the deuteration tank. In each stage, heavy water flows from the head tank into the bottom of the deuteration tank, slowly displacing the light water upwards. The displaced water flows from the top of the deuteration tank with increasing D_2O isotopic content. The D_2O flowrate is regulated by a valve at the head tank outlet. For each stage, a set of predetermined levels of heavy water in the head tank triggers an automatic flow stoppage.

The sampling system (moderator) permits hypodermic samples and manual densitometer readings to verify that the desired D_2O effluent isotopic content has been reached after the specified D_2O head tank level change for each step.

Before transferring the deuterated resin, all lines on the transfer route that contain demineralized water are flushed and the receiving vessel filled with D_2O. Transfer takes place using the resin transfer pump after the appropriate flexible hose connections are made. The D_2O remaining in the deuteration tank can be drained to the D_2O head tank to prepare for a spent resin transfer. Both use instrument air pressure for the transfer. The deuteration tank is then dried by instrument air, which is exhausted to the D_2O vapour recovery system.

9.5.8.3 Component Description

9.5.8.3.1 Head Tank

A head tank is provided for heavy water storage. The heavy water head tank is supplied by the heavy water supply system and is vented to the vapour recovery system.

The tank is located above the deuteration tank, so that gravity flow can be used for deuteration. The level switches in the tanks operate the automatic on-off control valves located in the deuteration tank outlets.

9.5.8.3.2 Deuteration Tank

The deuteration tank is provided with a removable “wedge-wire” screen. The screen is capable of withstanding high differential pressures and is designed to minimize plugging. The tank incorporates a conical bottom to facilitate resin removal by resin slurry. Strainers are located in the inlet and outlet lines of the deuteration tank. The deuteration tank is equipped with connections to the ion exchange columns, heavy water supply system, instrument air, and the vapour recovery system.

9.5.8.3.3 Pumps

The deuteration system is provided with a resin transfer pump, which provides a circulation flow between the deuteration tank and the ion exchangers to transfer deuterated fresh resin.

The pump is of the canned type to eliminate seal leakage problems. The strainers in the resin transfer pump suction and discharge lines prevent any resin from entering the pump. The pumps are controlled by on-off switches mounted on the local control panel.

9.5.8.3.4 Strainers

Two types of strainers are used: conventional Y-type, and radial strainers. The Y-type strainers prevent ion exchange resin, either as whole or fractured beads, from passing along lines used for fluid flows only.

Radial strainers are used to allow resin to pass through them axially but prevent resin from passing out, radially, into the fluid lines.

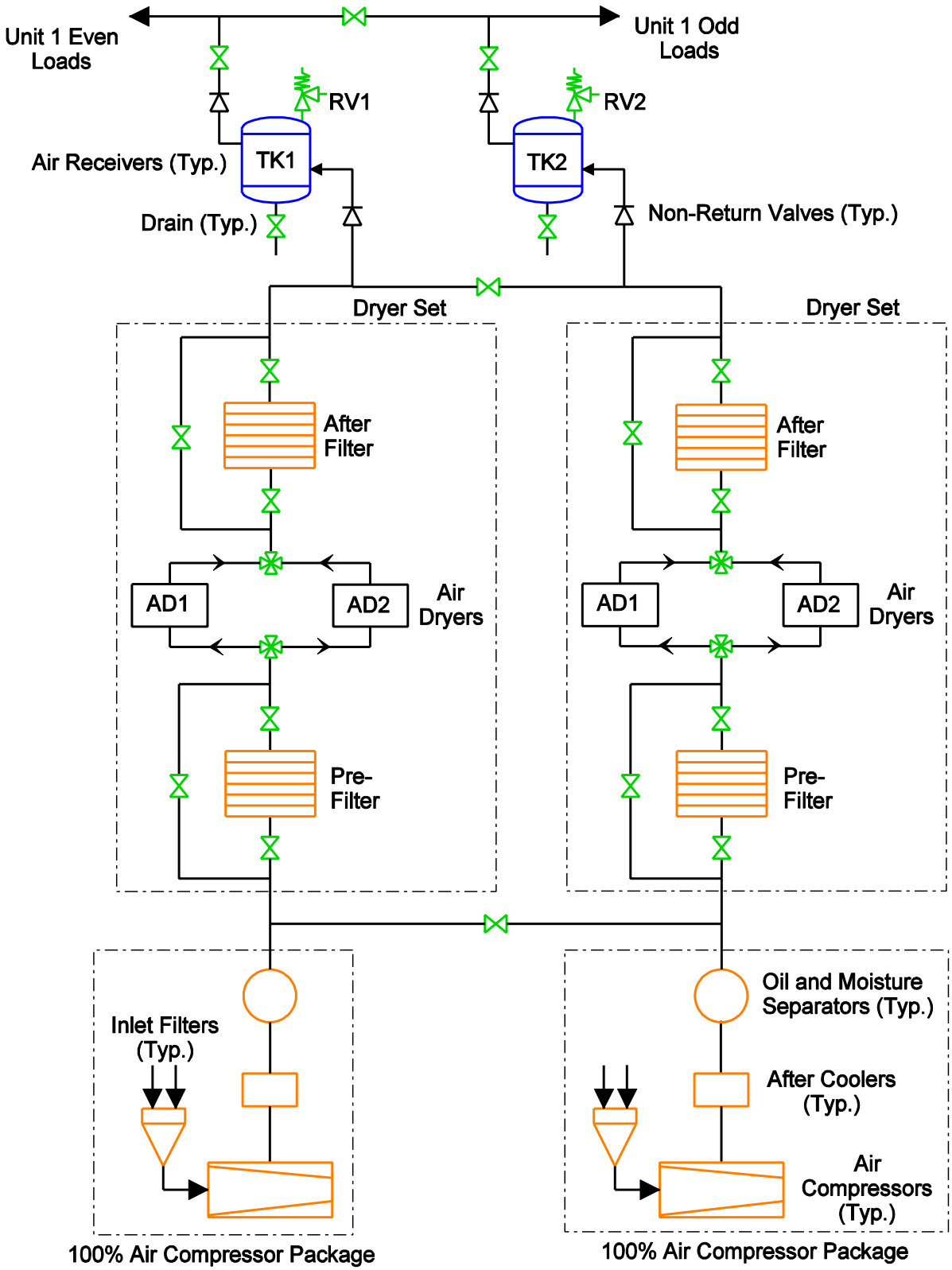

Figure 9.5-1 Simplified ACR-700 Instrument Air System Flow Diagram

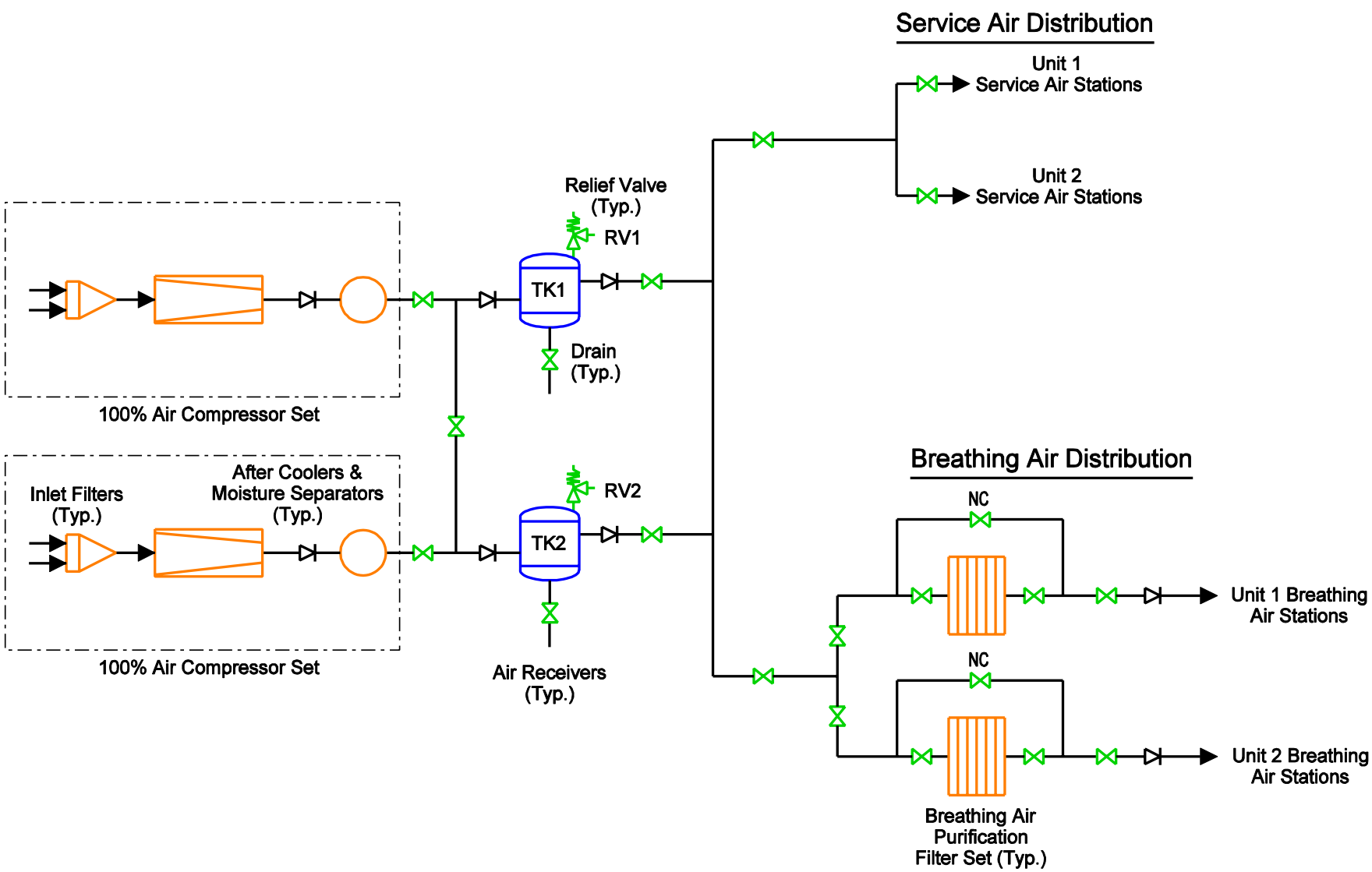

Figure 9.5-2 Simplified Breathing Air and Service Air Systems Flow Diagram

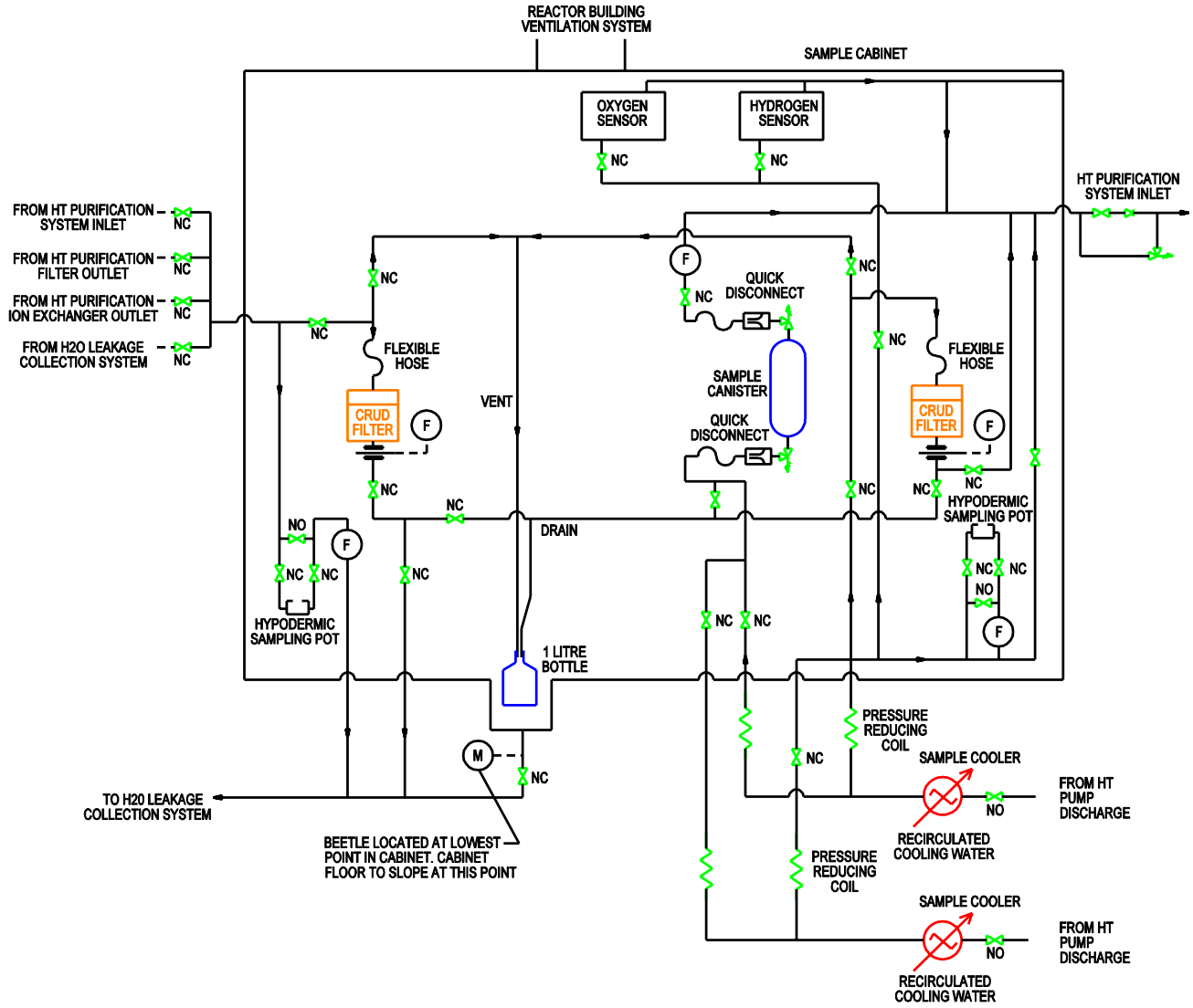

Figure 9.5-3 Heat Transport Sampling System

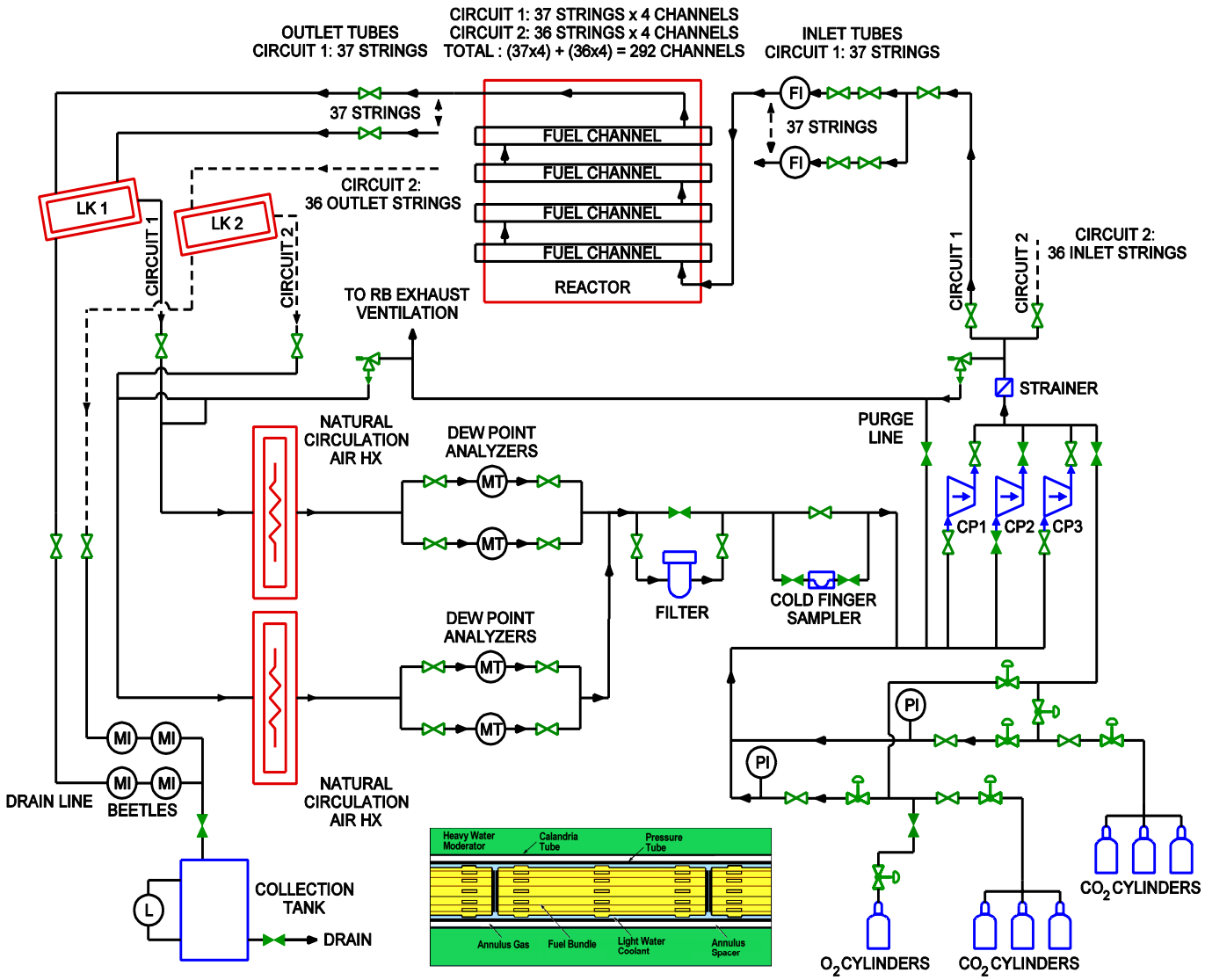

Figure 9.5-4 Annulus Gas System

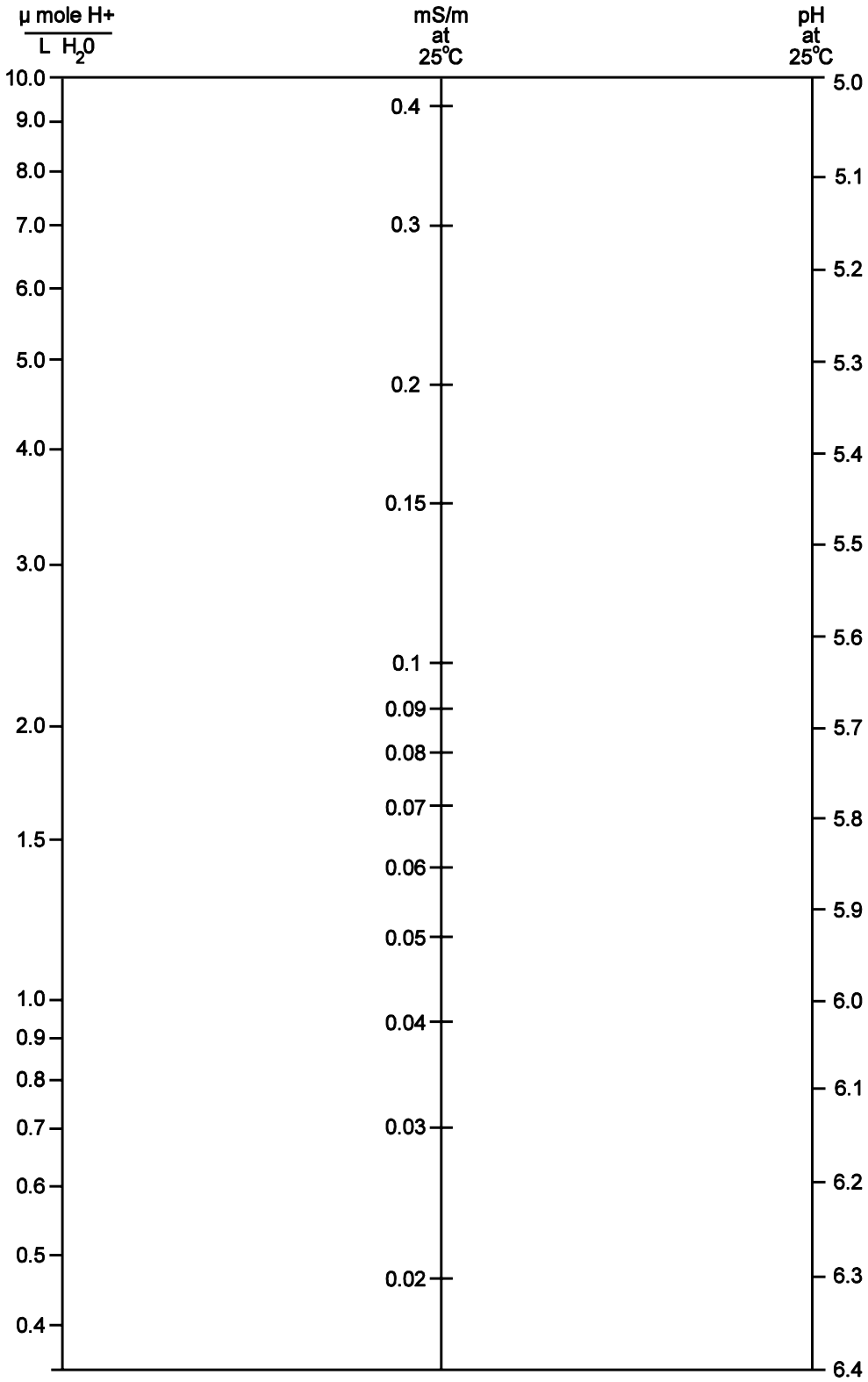

Figure 9.5-5 Nomogram to Correlate Concentration of Acid, Conductivity and pH Value

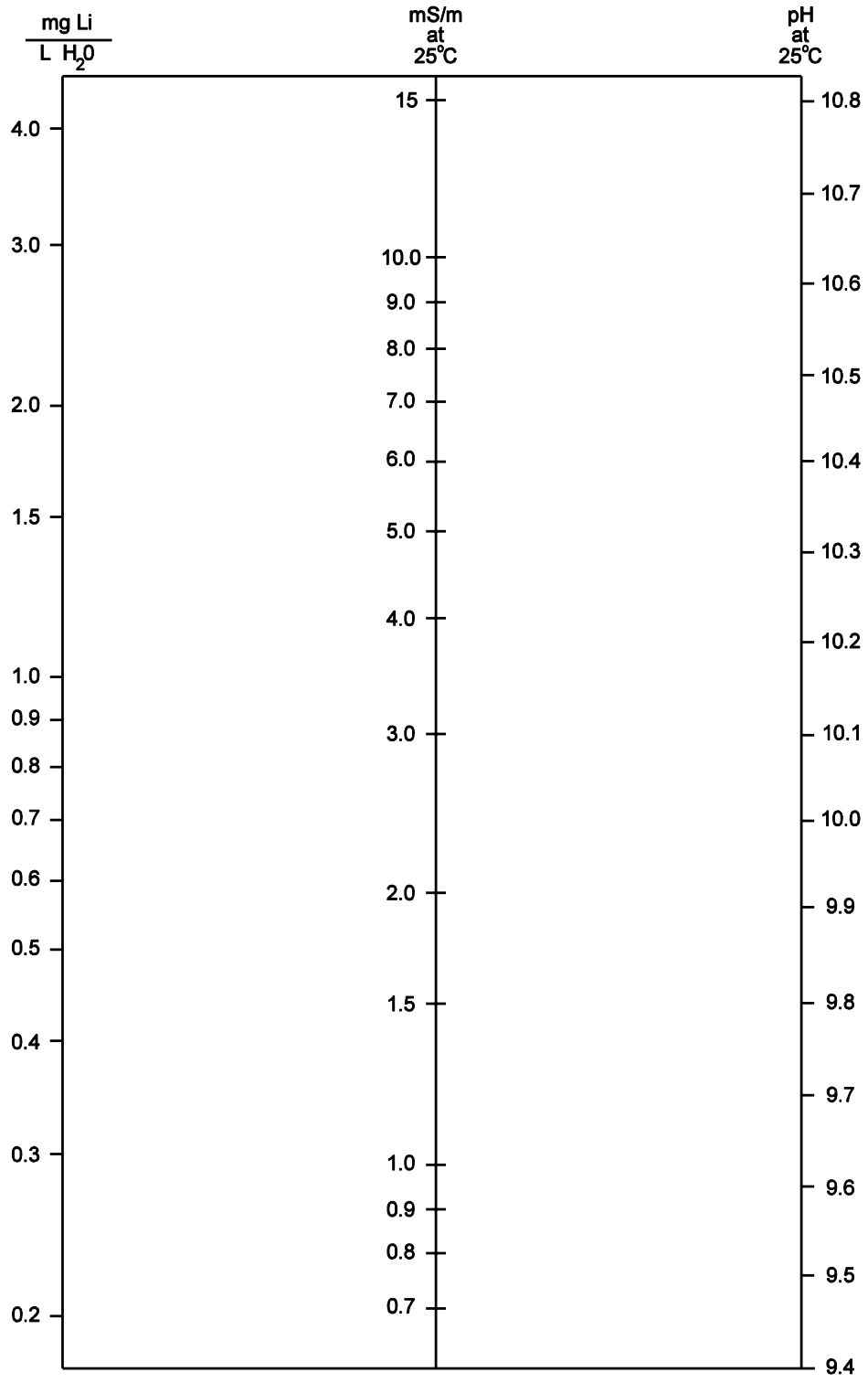

Figure 9.5-6 Nomogram to Correlate Lithium Concentration, Conductivity and pH

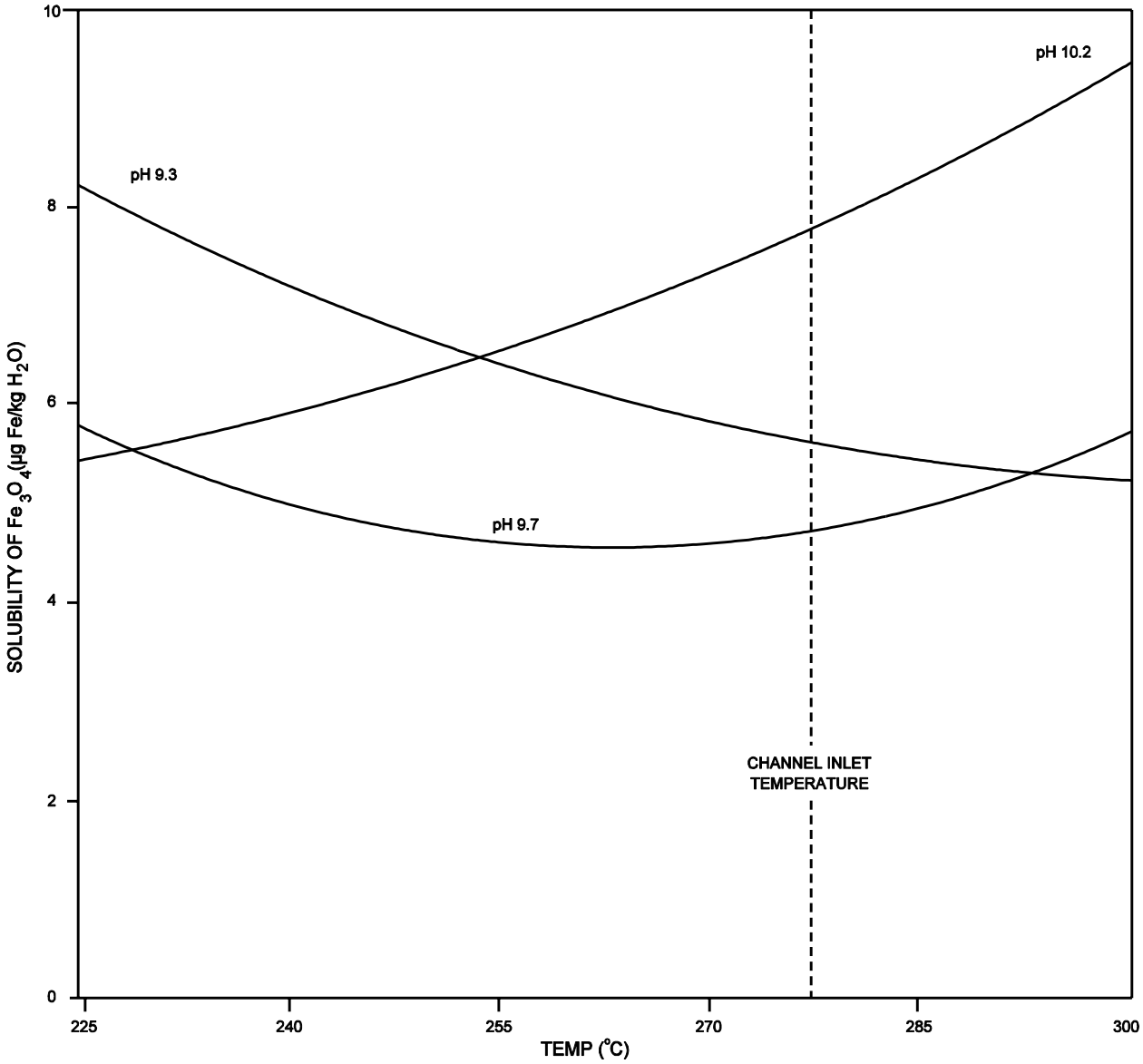

Figure 9.5-7 Solubility of Magnetite versus Temperature for Different pH (25°C) Values

9.6 Heating and Ventilation and Air Conditioning

The various buildings in the ACR-700 plant are generally heated by hot water produced by a steam-water heat exchanger, normally supplied with steam from the turbine or alternatively from the auxiliary boiler system. One auxiliary boiler serves both units.

A heat exchanger of the steam-glycol type is also supplied with steam from these same sources. The heat from the glycol/water solution is passed to incoming outside air via heating coils, which, being filled with glycol solution, are in no danger of freezing in the event of failure of the heating or circulating systems.

During reactor operation, no external heat is required to maintain the reactor building temperature. When the reactor is shut down, reactor building heat is provided by heating the ventilation air supply to the building.

9.6.1 Reactor Building

9.6.1.1 Design Bases

The reactor building cooling, heating, and ventilation systems are designed to the following requirements.

a) Provide adequate air change rates in all accessible areas to prevent build-up of activity which may be released by local sources, or which may be spread by the movement of equipment or personnel through the area.

b) Provide local exhaust connection, enclosures, or hoods in areas that are normally not ventilated to minimize the spread of activity released during equipment operation or maintenance.

c) Maintain the reactor building at a pressure slightly below atmospheric to prevent the release of activity through air-lock enclosures, or past door seals.

d) Provide air filtration and absorption for minimum activity release during normal ventilation.

e) Provide air distribution and maintain a pressure balance in the accessible areas so that any transfer of atmosphere between areas will be from the clean areas to the potentially more contaminated areas.

f) Provide easy access to all equipment associated with this system to permit periodic tests and inspection during normal reactor operation.

g) Provide redundant exhaust fans and control dampers as required to ensure continuous operation of the ventilation system and containment of activity releases inside the reactor building.

h) Provide suitable filtration of the ventilation supply air to prevent the activation of atmospheric particles, which may enter with the ventilation.

i) Provide dehumidification of the ventilation supply air to minimize downgrading of D_2O vapour inside the RB.

j) Provide suitable means of reducing H_2O ingress into the reactor building during normal operation while the ventilation is on.

k) Provide indication of differential pressure across filters, air flow from ventilation exhaust, and temperature in the carbon filter.

l) Provide measurement and indication of air temperature between cooling and heating coils.

m) Provide control of dampers and fans.

n) Maintain and control ambient air average temperature in the accessible and inaccessible areas during normal operating conditions. Over a month's duration, the average temperature shall remain at or about the normal condition.

o) Limit the average air temperature within prescribed limits in the inaccessible areas so that the heat will not damage the building or equipment. The inaccessible areas include the reactor vault, the FM and SG vaults, and the moderator room.

p) Limit the air temperature in the accessible areas within prescribed limits during normal reactor operation to allow station staff to perform operation/maintenance tasks.

q) The reactor building cooling system shall be capable of cooling the reactor building so that the building concrete surface temperature does not exceed the specified concrete temperatures.

r) Dampers shall be provided on the LAC discharge ducts, where more than one LAC operates in parallel. This is to prevent air from the operating cooler from short circuiting through the other non-operating coolers.

s) All the components participating in the safety function shall be seismically qualified.

t) The ventilation system's instrumentation and containment isolation valves are able to operate under harsh conditions resulting from a LOCA.

u) Local air coolers for SG vault and dome area are designed to operate in harsh environmental conditions such as LOCA or a MLSB.

v) Ventilation systems shall be designed to control the airborne contamination and maintain a flow pattern from areas of lower contamination to areas of higher contamination.

9.6.1.2 System Description

a) Reactor Building Heating

The interior rooms of the reactor building pick up heat from the steam generator, pumps, and equipment when the reactor is running. The heat is greater than the building losses, so no external heating is required.

Reactor building heating during reactor shutdown is provided via the reactor building ventilation system, which is designed as a once-through system. The hot water system and

inlet air-handling unit are sized to heat the full 100% flow of outside air to 24°C, and thus keep the RB warm during shutdown.

b) Reactor Building Cooling

See Sections 6.5.2.2 and 6.5.3.2.

c) Reactor Building Ventilation

The reactor building ventilation system provides air exchange and air distribution inside the reactor building, maintains the RB at slightly lower than atmospheric pressure, provides filtration of airborne radioactivity, and dries the incoming air. Air exchange in the accessible areas of the reactor building prevents the build up of airborne activity released by local sources or spread by the movement of equipment. Maintaining the negative pressure in the RB from its surroundings minimizes the release of activity to the environment. Drying of incoming air minimizes the downgrading of RB airborne heavy water and improves D_2O upgrading efficiency.

The D_2O vapour recovery system recovers D_2O leakage, reduces D_2O vapour losses, and reduces tritium contamination inside the moderator areas due to leakage or vapour migration. It effects closed cycle drying of moderator areas after minor accidental system failure, temporary high leak rate, or prior to shutdown or routine maintenance. It also minimizes downgrading caused by air or ordinary water leakage into the moderator areas, and controls the movement of air between the accessible and the inaccessible moderator areas.

The Reactor Building Ventilation System consists of a network of supply and exhaust ducting inside the reactor building with a penetration through the containment boundary to the air conditioning unit and exhaust filter train respectively.

An exhaust air filter train located in the RAB consists of a bank of activated carbon filters, preceded by a high efficiency prefilter and absolute (HEPA) filter bank, and followed by absolute (HEPA) filter bank, is located at this point to permit either continuous or intermittent cleanup of the exhaust flow as required before discharge to the atmosphere. Two 100% rated exhaust fans are located at the clean air side of the filter bank with interlocked isolation dampers for each fan. They maintain the specified air flow rates against the filter resistance.

An air conditioning unit located in the RAB draws air from outside, filters and conditions it as required, and delivers it via a supply air duct system into the RB. The air conditioning unit is fitted with a dessicant dryer to minimize downgrading of D_2O inside the RB and improve upgrading efficiency.

Air change rates and flow patterns will be established by the adjustment of balancing dampers in the supply and exhaust ductwork. Fan inlet vanes in the RB air conditioning unit will permit the adjustment of reactor building-to-atmospheric pressure balance.

At each penetration of the containment boundary, both the supply and exhaust air ductwork will be fitted with three isolation dampers, capable of quick closing on high reactor building containment pressure or high exhaust activity. Control room operation and status indication of these dampers is provided.

9.6.1.3 Component Description

Component descriptions for the ventilation system are described in Sections 9.6.1.3.1 to 9.6.1.3.5. Component descriptions for the cooling system are described in Section 9.6.1.3.6.

9.6.1.3.1 Ventilation Supply Air Conditioning Unit

The ventilation supply air conditioning unit consists of a factory assembled unit including a pre-heating coil section, a pre-filter section, a pre-cooling coil section, a post-heating, a post-cooling coil section, a dessicant dryer section, a fan section, and a post-filter section. The chilled water cooling coils are provided with condensate drains.

Filtration consists of a fixed-type pre-filter along with a high efficiency, replaceable cartridge type of filter. The overall efficiency of the combined filter is 99.90% of 5 micron dust removal. The filter assembly is complete with a suitable drive motor and control to advance the filter media as required by dust-loading.

The heating coil is supplied with hot water/glycol.

The chilled water cooling coils in the unit are supplied with the required rate of chilled water at 6°C (43°F). Separate hot water/glycol and chilled water control valves are provided to maintain desired supply air conditions.

To reduce the amount of H_2O ingress into the reactor building during normal operation, a dessicant drier is installed in the supply air conditioning unit. This will result in less downgrading of the D_2O recovered through the D_2O vapour recovery driers.

9.6.1.3.2 Ventilation Exhaust Filter Train

The ventilation exhaust filter train consists of a charcoal bed supported in vertical 'hopper-type' stainless steel screens designed for remote removal. The charcoal section is preceded by a high efficiency pre-filter and absolute (HEPA) filter bank, and followed by a similar bank of absolute (HEPA) filters consisting of removable cartridges each with a minimum efficiency of 99.97% for 0.3 micron dioctylphtalate generated particles.

The total filter assembly is enclosed in a suitable factory assembled housing, complete with leak-tight access doors, internal lights and drains, instrumentation fittings for pressure drop, and temperature monitoring ports for carbon sampling, air sampling, and radioactive tracer injection during in-situ efficiency testing.

High and low differential pressure measurements are provided across each filter and transmitted to the main control room to signal filter failure or wear, and hence the need for maintenance of the filter.

The filter unit design is such that changing all types of filters is done with ease and minimum radiation exposure to operating personnel. No loose radioactive particles or gases trapped within each filter unit can be released to the environment, outside the filter housing, during the filter

change. Also, the equipment has dimensions so as to ensure sufficient access space for personnel equipped with full anti-contamination clothing and respirators, and carrying a loaded filter cell.

The fire protection for the charcoal filter uses fire sprinkler nozzles mounted within the charcoal filter housing and piped to the outside of the housing for a manual attachment to the firewater system. A fire detection system including a thermocouple at the discharge of the filter housing and a two-stage alarm is provided to detect high temperature in the charcoal filter.

9.6.1.3.3 Ventilation Exhaust Fans

Two 100% centrifugal exhaust fans are located in the reactor auxiliary building. The fans are fitted with a variable inlet vane volume control, which is manually modulated from the minimum position during filter bypass to the fully-open position with loaded filters.

The total ventilation exhaust flow rate from the reactor building is continuously measured for control room indication.

The discharges from each fan are fitted with a rubber seal leak-tight butterfly damper to automatically close when the fan is stopped.

9.6.1.3.4 Ventilation Isolation Dampers

Isolation dampers are located on the supply and return air ductwork and these are gas-tight pneumatic valves. Suitable interlocks are provided to prevent manual opening of the containment dampers after a LOCA.

9.6.1.3.5 Ventilation Fire Dampers

The reactor building ventilation system ductwork is equipped with fire dampers set to close on high temperature.

9.6.1.3.6 Local Air Coolers

See Section 6.5.3.2.

9.6.2 Reactor Auxiliary Building HVAC System

9.6.2.1 Design Bases

a) The system shall remove airborne particulate, gaseous, aerosol, toxic, and radioactive contaminants from contaminated and potentially contaminated areas of the RAB (including the SFB), and ensure it is suitably filtered via the clean air discharge system or spent fuel bay exhaust system before being discharged to the stack.

b) The system shall provide proper air distribution so that any air transfer is from areas of potentially low contamination to areas of potentially higher contamination.

c) Local exhaust shall be provided in the rooms with potential odour, fume, or explosive gas hazards.

d) The secondary control area shall be maintained at a slightly higher pressure with respect to all areas of the RAB with an independent HVAC System.

e) The system shall respond to smoke/fire detection and shall have the capacity to remove smoke from contaminated areas of the RAB.

f) Selected RAB rooms connected to the clean air exhaust, spent fuel bay exhaust, or Long Term Cooling (LTC) exhaust shall be maintained at a lower pressure with respect to the surrounding RAB.

g) The system shall provide heating, cooling, humidification, and ventilation on a year-round basis to the RAB areas to meet the required room temperature and humidity design requirements

h) The system provides for air filtration at all HVAC units supplying fresh air to the RAB.

i) The system provides fresh air for ventilation in compliance with ANSI/ASHRAE standards.

Indoor Design Temperatures

a) The system maintains the air conditions in the RAB at a minimum of 35% relative humidity year round. In addition, air conditions in the SFB areas shall not exceed a maximum of 90% relative humidity. The following indoor design temperatures shall be maintained:

- Battery rooms: 22°C ± 3°C year-round.
- RAB: 30°C maximum in summer; 18°C minimum in winter.
- SFB: 40°C maximum in summer; 18°C minimum in winter.
- SCA: 22°C ± 3°C and 35-50% relative humidity range during occupancy.

b) Local air coolers will be used in areas where lower temperatures are required.

9.6.2.2 System Description

The RAB HVAC system consists of the following:

a) General areas HVAC system, which normally supply air to general areas of the RAB.

b) Class III electrical equipment rooms and battery rooms HVAC systems.

c) RCW equipment area ventilation systems

d) Local exhaust provisions for selected areas (e.g. battery rooms and washrooms) to allow for air exhaust directly to the atmosphere.

e) A clean air discharge system, which provides exhaust from contaminated and potentially contaminated areas of the RAB.

f) A spent fuel bay exhaust system which provides exhaust from the spent fuel bay and associated areas in the RAB.

g) LTC equipment areas exhaust air system

The fresh treated air follows a forced irreversible flow from zones with a low radioactive contamination to areas having a higher radioactive contamination, without the possibility of any air recycling. The building is separated into two zones according to the potential contamination hazard in each area.

Zone 2 - Contains no radioactive source and is normally free from contamination, but may become contaminated due to movement of personnel or equipment through it.

Zone 3 - Contains items of equipment that act as sources of contamination.

Air is drawn into the building, filtered, humidified, cooled, and heated in separate air handling units as required.

Air exhausted from areas where danger of contamination exists can be filtered, if required, before being discharged outside the building via the main exhaust duct. Air exhausted from areas where no danger of contamination exists is discharged outside directly through a roof exhaust stack.

9.6.2.3 Air Supply System

Ventilating air supply units, consisting of inlet air filters, heating coils, cooling coils, humidifiers, and fans are located in the ventilation area. A system of ducting is employed to distribute the air to the various areas of the building.

9.6.2.4 Non-Contaminated Exhaust System

Exhaust air which does not require monitoring for activity is collected from the non-contaminated areas in a separate exhaust duct system, and discharged through a roof exhaust fan.

9.6.2.5 Clean Air Discharge System

This system covers the exhaust air that may contain radioactivity, and which is required to pass through pre and HEPA filters and activity monitors before discharge from the building via the clean air exhaust stack. Areas exhausted through this system include the decontamination areas and the radioactive waste management areas.

Air is collected in a separate duct system and conducted to the RAB clean air discharge equipment room. An equipment assembly consisting of pre-filters, a high efficiency (absolute) filter bank, and two 100% exhaust fans, is located in this room. The pre-filters and absolute filters are installed upstream of the fans, and in the main duct they are normally on line. A filter bypass is provided for filter maintenance. When it is necessary to operate in the filter bypass mode, the appropriate dampers change state via a local handswitch.

The LTC areas will have a separate exhaust air system with a filter train and exhaust fans to filter the exhaust air, if required, before being discharged outside the building via the common exhaust stack.

9.6.2.6 Spent Fuel Bay Exhaust System

This system exhausts air from the spent fuel bay and associated areas in the RAB.

The system is comprised of:

a) An exhaust ducting system in the spent fuel bay and associated areas to exhaust the air to atmosphere via a filtering unit.

b) A filtering unit incorporating a disposable type cartridge pre-filters, a pre HEPA filter, charcoal filters and a post HEPA filter.

c) Two 100% capacity centrifugal exhaust fans.

9.6.2.7 Secondary Control Area HVAC System

The HVAC system in the secondary control area consists of a 100% self-contained roof-top air conditioning unit complete with electric heating coil, and connected by low velocity supply and return ductwork to distribute and recirculate conditioned air to this area to maintain satisfactory operating conditions for the equipment. A minimum fresh air quantity is introduced to the system to provide ventilation requirements.

The system is seismically qualified to DBE Category ‘B’. The system will be functional during and after a seismic event. The ductwork in the system is seismically qualified to DBE Category ‘A’.

Electric power for the air-conditioning unit and the ventilation system is supplied by Class III power.

9.6.3 Service Building and Maintenance Building HVAC Systems

9.6.3.1 Design Basis

9.6.3.1.1 Service Building and Maintenance Building Heating Systems

The heating systems for all areas of the services and maintenance buildings are designed to provide the following:

a) Comfort conditions for personnel working inside the buildings

b) Protection against equipment and line freezing during winter operation.

Heat losses from all areas of the services and maintenance buildings during winter operation are replaced by the following:

a) Preheating the normal ventilation supply air to normal temperature;

b) Installation of local convection or forced air unit heaters along exposed walls of perimeter offices, if required.

The hot water heating system supplying the floor convection and forced air unit heaters and heating coils in the ventilation inlet ducts is designed to maintain the required indoor temperature in winter.

9.6.3.1.2 Service Building and Maintenance Building Ventilation and Air Conditioning Systems

a) To provide comfortable and healthy conditions for personnel working inside the buildings.

b) To remove heat generated by equipment inside the building.

c) To control the movement of air in areas containing equipment that could act as a source of contamination.

d) To provide a means for filtering out or removing airborne contamination in the exhaust air flow from potentially contaminated areas, and prevent the release of excessive activity from the plant.

9.6.3.2 System Description

The HVAC system in the services and maintenance buildings consists of various air conditioning units, supply and exhaust fans, relief vents, hot water and electric unit heaters, electric duct heaters, air filters, louvers, dampers, and interconnecting ductwork. Various combinations of the equipment listed above are used to provide adequate control of the temperatures in each building.

9.6.4 Main Control Building Air Conditioning

Four 50% capacity air conditioning units are provided to maintain conditions of approximately 23°C (73°F) and 50% ±10% relative humidity. Each unit is equipped with an air filter. A minimum of 10% fresh air is introduced to the system and mixed with the return air to provide adequate ventilation.

An outside air filtering unit is also provided to operate during a LOCA or any radiation release, to maintain a clean air environment. The system consists of a pre-filter, two HEPA filters, a charcoal filter and a filter bypass with two motorized dampers.

The air conditioning system is of conventional design. Local electric duct heating coils, controlled by room thermostats, compensate for winter heat losses and reheat the conditioned air as required.

The system is seismically qualified to DBE Category ‘B’. The system will be functional during and after a seismic event. The ductwork in the system is seismically qualified to DBE Category ‘A’.

Electrical power for air conditioning units and fans in the air filtering unit is supplied by Class III power.

9.6.5 Turbine Building Heating and Ventilation System

9.6.5.1 Design Bases

The turbine building heating and ventilation system includes the turbine hall and turbine building auxiliary bay.

In conjunction with the turbine equipment, the system performs the following functions:

a) Maintains indoor temperatures between 18°C and 40°C for areas critical to plant operation or human comfort. To achieve this in electrical equipment rooms, part of the ventilation air is chilled water cooled.

b) Provides local exhausts of noxious and flammable gases from equipment and storage areas.

The design of the heating and ventilation system takes into consideration a dividing wall between the turbine hall and auxiliary bay.

Indoor design temperatures for TB heating and ventilation systems are:

- Minimum winter temperature for areas critical to plant operation or human comfort. This covers all areas in the turbine building. 18°C
- Maximum summer temperature for areas critical to plant operation or human comfort, such as maintenance areas and operating floors. 40°C
- Other areas, such as the turbine hall rafter area, high pressure feedwater heater areas, main and auxiliary feedwater pump room and deaerator room. 40°C

9.6.5.2 System Description

The Turbine Building areas listed below are heated and ventilated. The rate of ventilation is dependent on the permissible temperature in these areas where there is appreciable heat gains. For areas with no appreciable heat gains, the rate of ventilation shall be based on the number of air changes, which varies between 0.5 to 10 air changes per hour, depending on the area being ventilated. The following areas are provided with ventilation:

a) Turbine hall, condenser, and low pressure feedwater heater areas

b) Main and auxiliary feedwater pump room

c) High pressure feedwater heater rooms

d) Deaerator room (in the turbine building auxiliary bay)

In addition to the above, the excitation cubicle is cooled via an air-conditioning unit.

The TB heating and ventilation systems are designed to contain the fire in one zone and prevent it from transferring to other zones and to remove smoke and/or heat generated by fire in areas where such emissions would hamper manual fire fighting activities.

The TB heating and ventilation systems are not required to be functional after a seismic event. However the equipment and ducting shall be designed to prevent their collapse after a seismic event in the areas containing equipment and systems that are required to be functional during and after a seismic event.

9.6.6 CCW Pumphouse, RSW Pumphouse, and Fire Water Pumphouse Heating and Ventilation Systems

9.6.6.1 Design Bases

The heating and ventilation systems shall be designed to contain a fire in one zone and prevent it from transferring to other zones and to remove smoke and/or heat generated by fires in areas where such emissions would hamper manual fire fighting activities.

Heating Systems

The heating systems shall be designed to operate in conjunction with the ventilation systems to maintain room temperature, compensate for make-up air losses and prevent freezing of piping and equipment during winter.

The heating media for the heating systems are as follows:

a) Electric heating coils located in ducting to heat internal areas ventilated by separate air handling units.

b) Electric unit heaters to heat internal areas where hot water heating is not practical.

Ventilation Systems

The ventilation systems shall be designed to provide the following:

a) Satisfactory operating conditions for personnel and operating equipment

b) Removal of heat generated by equipment within the buildings

c) Removal of fumes/toxic gases and hydrogen, as applicable

The rate of ventilation shall be dependent on the permissible temperature in the areas where there are appreciable heat gains. For areas with no appreciable heat gains, the rate of ventilation shall be based on the number of air changes, which usually varies between 0.5 to 10 air changes per hour, depending on the area being ventilated.

Indoor Design Temperatures

- CCW Pumphouse and RSW Pumphouse

In the CCW pumphouse and RSW pumphouse areas where only freeze protection is required, the minimum temperature is 7°C. The maximum temperature is 40°C.

- Fire Water Pumphouse

  In the fire water pumphouse, the minimum temperature is 18°C and the maximum temperature is 40°C.

9.6.6.2 System Description

The heating and ventilation system in the CCW pumphouse, RSW pumphouse, and fire water pumphouse consists of supply and exhaust fans, relief vents, electric unit heaters, electric duct heaters, air filters, louvers, and dampers. Various combinations of the equipment listed above are used to provide adequate control of the temperatures in the CCW pumphouse, RSW pumphouse, and Fire Water Pumphouse.

With the exception of RSW pumphouse, the CCW pumphouse and fire water pumphouse, heating and ventilation systems are not required to be functional after a seismic event. However the equipment and ducting shall be designed to prevent their collapse after a seismic event in the areas containing equipment and systems that are required to be functional during and after a seismic event. Refer to Reference 9-15.

9.6.7 Auxiliary Boiler Building, Water Treatment Plant, and Diesel Generator Buildings HVAC Systems

9.6.7.1 Design Bases

The HVAC systems shall be designed to contain a fire in one zone and prevent it from transferring to other zones and to remove smoke and/or heat generated by fires in areas where such emissions would hamper manual fire fighting activities.

a) Heating Systems

   The heating systems shall be designed to operate in conjunction with the ventilation systems to maintain room temperature, compensate for make-up air losses, and prevent freezing of piping and equipment during winter for those systems that use outside air for make-up.

   The heating media for the heating systems are as follows:

   1) Hot water to room unit heaters to heat internal areas where ducting is not available.
   2) Electric unit heaters to heat internal areas where hot water heating is not practical.

b) Ventilation and Air Conditioning Systems

   The ventilation and air conditioning systems shall be designed to provide the following:

   1) Satisfactory operating conditions for personnel and operating equipment.
   2) Removal of heat generated by equipment within the buildings.

3) Removal of fumes/toxic gases and hydrogen, as applicable.

The rate of ventilation shall be dependent on the permissible temperature in the areas where there are appreciable heat gains. For areas with no appreciable heat gains, the rate of ventilation shall be based on the number of air changes, which usually varies between 0.5 to 10 air changes per hour, depending on the area being ventilated.

c) Indoor Design Temperatures

The minimum temperature for areas critical to plant operation or human comfort, including all areas in the buildings mentioned above, is 18°C.

The maximum temperatures for areas critical to plant operation or human comfort, including main floor areas of the Water Treatment Plant, is 40°C.

The maximum temperature for the auxiliary boiler building and diesel generator building is 40°C.

9.6.7.2 System Description

The HVAC system in each building consists of various air conditioning units, supply and exhaust fans, relief vents, hot water and electric unit heaters, electric duct heaters, air filters, louvers, dampers, and interconnecting ductwork. Various combinations of the equipment listed above are used to provide adequate control of the temperatures in each building.

With the exception of the seismically qualified diesel generator building, the non-seismically qualified diesel generator building, the auxiliary boiler building and the water treatment plant, heating and ventilation systems are not required to be functional after a seismic event. However the equipment and ducting will be designed to prevent their collapse after a seismic event in the areas containing equipment and systems that are required to be functional during and after a seismic event.

9.7 Water Management

9.7.1 Heavy Water Management

9.7.1.1 Introduction

Heavy water is important to the operation of the CANDU station and is managed by the following systems:

- D_2O supply system
- D_2O vapour recovery system
- D_2O cleanup system

The D_2O supply system is designed to receive and store D_2O and to pump it to the moderator systems during initial filling. In addition, the storage tanks are capable of containing the inventory of the moderator system in the event that draining for maintenance is required. The tanks also store high isotopic D_2O during normal reactor operation.

The reactor building includes operating and accessible service areas containing systems and equipment that are subject to D_2O vapour or liquid leakage during operation or shutdown maintenance. The D_2O vapour recovery system dries the air in these areas by removing the H_2O/D_2O leakages which are in vapour form, and transferring the H_2O/D_2O condensate to the D_2O cleanup system, and subsequently to upgrading for recovery of D_2O.

During normal operation, D_2O escapes in the form of leakages and spills which are collected by the D_2O vapour recovery system and D_2O collection system. Also, during deuteration of ion exchange resin, heavy water becomes downgraded and contaminated. The D_2O cleanup system is designed to remove the dissolved particulate, organic, and ionic impurities from the recovered D_2O and produce a product suitable for D_2O upgrading.

For ACR reactors, it is recommended that the moderator heavy water be maintained at high isotopic purity of 99.78% in order to comply with safety and licensing issues concerning the coolant void reactivity. D_2O upgrading is used to restore high isotopic content.

9.7.1.2 D_2O Supply System

9.7.1.2.1 Design Bases

a) To transfer D_2O between drums and the supply tanks, store it, and pump it to moderator systems in either of the two units on demand.

b) To drain excess D_2O from moderator systems for both units to the supply tanks as required.

c) To be able to contain the D_2O drained from one moderator system for maintenance purposes, in addition to the normal station reserves of D_2O.

9.7.1.2.2 System Description

The D_2O supply system is the central depository of D_2O. The system itself consists of supply tanks, pumps, a sample station that provides a liquid sample from any of the tanks, as well as associated valves, sight glasses, flexible hose assemblies, and piping.

This is a common system serving both reactor units; i.e., all D_2O supply system equipment is shared by both units.

Two 100% capacity pumps are provided. Either pump can be used to transfer D_2O to the moderator and deuteration systems of both units. The pumps also establish recirculation flow through the tanks before a sample is taken through the hypodermic sample station.

The supply tanks are vented to a small dedicated dessicant cartridge or rotary dessicant dryer to control tritium exposure.

D_2O is added from drums to the storage tanks through the D_2O addition station by connecting a flexible hose to the tank inlet header. A weigh scale is used to keep an inventory of the D_2O transferred to the D_2O supply system from the drums, and vice versa.

D_2O from the Unit 1 and Unit 2 calandrias can be transferred to the storage tanks by gravity or by using the main moderator pumps.

All components throughout the D_2O supply system are constructed of stainless steel.

9.7.1.3 D_2O Vapour Recovery System

A vapour recovery system is provided for the moderator equipment enclosures to maintain a dry atmosphere in the areas of the reactor building that are subject to D_2O leakage during operation or shutdown maintenance and the heavy water management area in the maintenance building.

9.7.1.3.1 Design Bases

a) The heavy water vapour recovery system shall reduce airborne tritium levels during chronic heavy water leakage, as well as acute leakage or spill conditions.

b) Tritium levels shall be minimized to reduce potential radiation exposure to the public and the plant staff from the air discharged from the reactor building (RB) and maintenance building (MB).

c) The system shall recover heavy water for re-use within the dried areas of the reactor building and the maintenance building.

d) A pressure gradient shall be maintained to ensure that air flows from an area of anticipated low to high airborne tritium concentration. The main moderator equipment rooms shall be maintained at a lower pressure than the moderator auxiliary's rooms, which in turn shall be at a lower pressure than the non-D_2O areas of the RB.

e) The system shall remain operational during plant shutdowns in order to limit tritium levels during maintenance activities in the RB.

9.7.1.3.2 Design Description

9.7.1.3.2.1 R/B D_2O Vapour Recovery System

The ACR-700 RB D_2O vapour recovery system is located inside the RB and consists of rotary desiccant wheel dryer units, flow control and isolation dampers, a vapour recovery collection tank, a transfer pump, ducting, piping, and instrumentation. There are 2 dryer units recovering heavy water vapour leakage to the atmosphere in the dried areas of the reactor building. Each dryer unit consists of a desiccant wheel, adsorption fan, regeneration fan, roughing filter, pre-cooler, regeneration heater and condenser.

The reactor building vapour recovery system also includes a single heavy water vapour condensate collection tank. There is a corresponding condensate pump to transfer the condensate to the D_2O Cleanup System. The full dryer air flow can be used to draw in purge air from RB into one or both loops by opening a damper and closing the damper in the dryer discharge duct. This draws untritiated RB air into the dried areas, picks up D_2O leakage in the rooms and then passes it through the dryer before discharging it to the reactor building ventilation system (RBVS).

The differential pressure between each main moderator room and adjacent RB rooms is measured and controlled to maintain the moderator rooms at a lower pressure.

9.7.1.3.2.2 M/B D_2O Vapour Recovery System

The ACR-700 MB D_2O vapour recovery system is located inside the MB and consists of a single rotary desiccant wheel dryer unit, flow control and isolation dampers, ducting, piping, and instrumentation. The dryer recovers heavy water vapour leakage to the atmosphere in the D_2O cleanup system, drumming and D_2O supply area of the maintenance building and includes a connection from the moderator spent resin storage tanks. The dryer unit consists of a desiccant wheel, adsorption fan, regeneration fan, regeneration heater and condenser. The function of the MB desiccant dryer is similar as the dryers provided in the RB vapour recovery system.

The condensate is continuously drained by gravity to a D_2O cleanup system feed tank, located in the same room.

9.7.1.3.3 Component Description

9.7.1.3.3.1 Dryers

Recovery of D_2O leakage is accomplished by rotary desiccant dryers.

Fans draw moisture-laden air to the dryers where the water vapour transported by the air is absorbed by the dessicant in the dryers. The dried air is returned to the enclosures. The D_2O is recovered from the dessicant during the regeneration of the dessicant. A closed loop circulates air over a heater, through the dryer where it picks up D_2O from the dessicant, and to a condenser where the D_2O vapour is condensed and the liquid drained to a collection tank.

9.7.1.3.3.2 Heavy Water Collection Tank

A collection tank is provided to collect the recovered D_2O/H_2O from the moderator equipment enclosure vapour recovery system.

A pump, of the canned (leak-tight) design, is provided to transfer collected D_2O from the collection tanks.

9.7.1.4 D_2O Cleanup System

9.7.1.4.1 Design Bases

a) To receive and store high tritium downgraded D_2O recovered from both Unit 1 and Unit 2.
b) To purify the high tritium D_2O in the moderator D_2O cleanup system to a level suitable for upgrading.
c) To store and pump the D_2O cleanup system product to the drum station for further processing.
d) To process D_2O received in feed drums so that oil and other bulk contaminants do not enter the feed tanks.
e) To permit fresh resin addition and spent resin disposal with minimum operator attention and radiation exposure.
f) To provide sufficient automatic control so that the pumps are protected in the event of operator unavailability.

9.7.1.4.2 System Description

Heavy water systems in the station are associated with the moderator system. This system cleans heavy water recovered from the moderator system. The system consists of feed tanks, product tanks, pumps, D_2O storage tanks, ion exchangers, charcoal filters and strainers, as well as associated piping and instrumentation.

This system is shared between Unit 1 and Unit 2.

The D_2O cleanup system is designed to remove particulates, oils, organic, and dissolved ionic impurities from heavy water recovered during station operation (i.e., leakage, spills, deuteration/dedeuteration operations). The collected water is held in the system feed tanks. Cleanup entails pumping the water through an activated charcoal bed to remove oils and particulate matter, and ion exchange columns in series, to remove organic and ionic impurities. The processed water is held in the system D_2O storage tanks to await upgrading.

The system is designed to be operated locally on a batch basis.

The charcoal and ion exchange resin are added to the vessels manually. Removal of spent resin is by slurrying with high pressure demineralized water to storage.

The filters and ion exchange columns are protected against overpressure by rupture discs, one for each vessel.

The cleanup system piping and all components are fabricated of stainless steel.

9.7.1.4.3 Component Description

9.7.1.4.3.1 Feed Tanks

Feed tanks, each with interconnecting overflow lines, are provided in the D_2O cleanup system to store the downgraded heavy water. Since the overflow lines are at a lower level than the vent lines, overflow between tanks will not flood the vent lines.

9.7.1.4.3.2 Product Tanks

Product tanks are provided in the D_2O cleanup system. As with the feed tanks, the product tanks are provided with interconnecting overflow lines, which will not flood the vent lines and hence, not jeopardize the D_2O vapour recovery system.

9.7.1.4.3.3 D_2O Storage Tanks

In order to maintain the segregation of the high-isotopic D_2O from the downgraded recovered heavy water the system is provided with D_2O storage tanks. These tanks will have the capacity to hold a one month volume of D_2O before it is sent off-site for upgrading.

9.7.1.4.3.4 Pumps

Two feed pumps, a product pump, and a storage pump are provided to the moderator heavy water cleanup systems.

Although the feed and product pumps are controlled automatically by tank levels, the spare feed pump is controlled manually.

9.7.1.4.3.5 Ion Exchange Columns

Ion exchange columns are provided in the D_2O cleanup system. Each incorporates a conical bottom to facilitate resin removal. Fresh resin is added through a penetration at the top of the column, while spent resin is slurried to the resin storage system with the help of demineralized water. The system design provides for some operational flexibility and for the use of alternative ion exchange resins should operating experience show that their use would be beneficial.

The first column in the D_2O cleanup system train contains a mixed resin bed to remove most cations, anions, and some organic impurities. A second column contains weakly acidic, macroporous cationic exchange resin, which removes most of the organic matter. The third column contains mixed beds to remove impurities carried over from the second ion exchange column. The third column also acts as a polishing bed. Although normal flow is through the three columns in series, it is possible to bypass any or all of the columns. The design permits withdrawal in the unlikely event of blockage.

9.7.1.4.3.6 Charcoal Filters

The charcoal filter is identical to the ion exchange columns, except that it contains granulated charcoal. This filter serves to remove oil by absorption from the feed stream, and to filter out some of the particulate matter.

When the pressure drop across the filter reaches a certain value, the charcoal is replaced. Exhausted charcoal is dedeuterated, if appropriate, and is then slurried out using demineralized water.

Fresh dry charcoal is added through a hopper located at the top of the filter. This fresh charcoal does not require deuteration.

9.7.2 Light Water Supply System

9.7.2.1 Introduction

The H_2O supply system is designed to store the primary coolant at cold temperature and pump it to the heat transport system during initial filling of the system. The light water supply tanks together with the P&ICS coolant storage tank are sized to contain the entire HTS inventory in the event the HTS is required to be drained for maintenance.

9.7.2.2 Design Bases

a) To drain excess H_2O from the reactor systems to the supply tanks as required for both units.

b) To be able to contain the H_2O drained from heat transport system of one unit for maintenance purposes.

9.7.2.3 System Description

The H_2O supply system is a central depository of primary coolant. The system consists of supply tanks, pumps, a sample station that provides a liquid sample from any of the tanks, as well as associated valves, sight glasses, flexible hose assemblies, and piping.

This is a common system serving both reactor units; i.e., all H_2O supply system equipment is shared by both units.

Two identical 100% capacity pumps are provided. The pumps are of canned, centrifugal type with stainless steel internals. One pump is used to transfer H_2O to the heat transport system via the HT pressure and inventory (P&IC) system. The pump also establishes recirculation flow through the tanks before a sample is taken through the hypodermic sample station.

Demineralized water is added to the supply tanks if required.

Coolant at cold conditions from the Unit 1 and Unit 2 heat transport systems can be transferred to the supply tanks by gravity or by the LTC pump operation.

9.8 Other Auxiliary Systems

9.8.1 Spent Fuel Bay Cooling and Purification System

This system primarily provides cooling of the water in the bays, to control the temperature rise due to the decay heat from the spent fuel. In addition, the purification components maintain the concentrations of dissolved and particulate material in the water at acceptably low levels, and ensure good clarity of the water so that underwater operations can be clearly monitored. Water quality requirements are maintained by specifying a pH of 5.5 to 8.5, and removing solids by way of the purification function. Spent fuel bay water quality is analyzed by taking bay water samples downstream of the ion exchangers. In the unlikely event of heat exchanger leakage into the RCW system, the source of the leakage can be determined by taking a sample downstream of each heat exchanger for analysis. Water levels are maintained and controlled to provide sufficient water shielding of the radioactive elements in the bay. Emergency water make-up is provided.

The spent fuel bay level is maintained automatically by level detectors that control the demineralized water make-up valve. The actual bay level is sensed by an analog detector that transmits the bay level to the main control room, thus allowing the operator to observe the variation in the bay level. If the bay level falls more rapidly, takes a longer time to reach the normal high level, and/or changes more frequently than normal, this may be an indication of leakage.

A more sensitive detection technique is to observe the inflow to the spent fuel bay under-drainage sump of the inactive drainage systems. If there is any drainage flowing into the sump, the sump pump will start on high level and transfer the sump contents to the liquid waste management system. While the pump is running, a sample may be collected at the pump discharge for analysis. The continuity of the analysis is dependant on the laboratory equipment.

The liner of the spent fuel bay will be made of stainless steel and is designed for a 60 year life. It is not anticipated that there will be any leaks. During construction and commissioning, the welds in the liner will be examined by NDE and checks will be made for leak tightness.

9.8.1.1 Design Bases

The spent fuel bay cooling and purification system is designed to fully meet the following general and safety requirements.

a) Maintain the temperature of the storage bay water at approximately 32°C (89.6°F) under normal operating conditions, when the bay holds the accumulated fuel from at least ten years of reactor operation.

b) The spent fuel storage bay has been designed to hold the accumulation of fuel from at least eleven years of reactor operation at the designed capacity factor and a core load of fuel. The heat exchangers have sufficient capacity to limit the water temperature rise to an acceptable value based upon the core load of fuel being added during a shutdown.

c) The space in the spent fuel bay and the heat exchanger capacity is totally adequate for a full core load at any period of time during the station operating life.

d) Maintain a minimum water level in the bays to ensure adequate shielding during all phases of the spent fuel handling and storage procedures.

e) Provide an adequate capability to remove suspended and dissolved radioactive material from the water to allow access to the working areas.

f) Maintain the purity and clarity of the water to minimise radiological exposure to operators working on the deck around the bay and to permit observation of the underwater spent fuel handling operations.

g) Maintain cooling after a seismic event.

9.8.1.2 Design Description

The design intent is to provide operational flexibility to meet varied purification demands without unnecessary duplication of equipment (see Figure 9.8-1). Normally, the pumps recirculate the water through the primary side of the designated heat exchanger(s). If necessary, water can be passed through the vacuum cleaning circuit filter to remove any suspended matter before being sent through the ion exchangers to remove dissolved radioactive and non-active materials. One transfer pit is provided for the storage bay system. This transfer pit is used to combine the skimming flows in the bay with the normal cooling and purification flow.

An emergency make-up connection is provided for the spent fuel storage bay to ensure heat sink availability.

High and low level alarms are provided in the transfer pit to signal the control of the appropriate make-up water valve. These high and low level alarms ensure continuous purification flow over the skimmers and adequate shielding of the spent fuel in the bays during fuel handling operations. Provision has been made to avoid pump cavitation should the water level fall below normal, and in this situation, the pump can be shut down either manually or automatically. In case of an abnormally low water level, automatic pump shutdown is essential.

Adequate shielding is ensured by locating the bay outlet pipes high enough so that even in the unlikely event of a pipe rupture, there is still sufficient depth of water. Inlet pipes are fitted with siphon breakers to prevent the water from falling below a preset level.

Active gases and liquids from the spent fuel bay purification system are sent to the appropriate waste management systems, where the effluents are monitored before discharging. In the spent fuel bay room, area monitors are designed to give warning of radiation hazards.

9.8.1.3 Component Description

Circulation Pumps

The pumps are the horizontal centrifugal type, driven by an electric motor, with stainless steel impellers and casing. They are fed from Class III power. Two pumps with an additional pump as a standby are provided. The inlets for all three pumps come from a common header, with suitable isolation valves between the suction lines. Pumps are designed for manual control from the main control room panel, and selective logic control from the local panel.

Vacuum Cleaner Circuit Pump

The vacuum cleaner circuit is provided to remove loose debris and solid particles from the bottom and walls of the SFB to ensure good clarity of the water. One centrifugal pump is provided to purify the bay water transferred by the vacuum cleaner tool. Skimming flow may also be filtered via this circuit if desired. The pump is designed to run on a Class III power supply.

Heat Exchangers

Two plate type heat exchangers are installed in the system to remove decay heat from the spent fuel in the storage bay. Recirculated cooling water is used as the cooling medium.

Filters

A filter is provided in the vacuum cleaner circuit to reduce the concentration of solids in the bay, the filter assembly being the disposable type. When changing filters, one of the shielded flasks provided for handling the filters from the heat transport system will be used.

Ion Exchangers

Two mixed-bed ion exchange columns are used to remove dissolved material from the water. These ion exchangers are of the non-regenerative type and are located between common inlet and outlet headers, with suitable bypass piping and isolation valves.

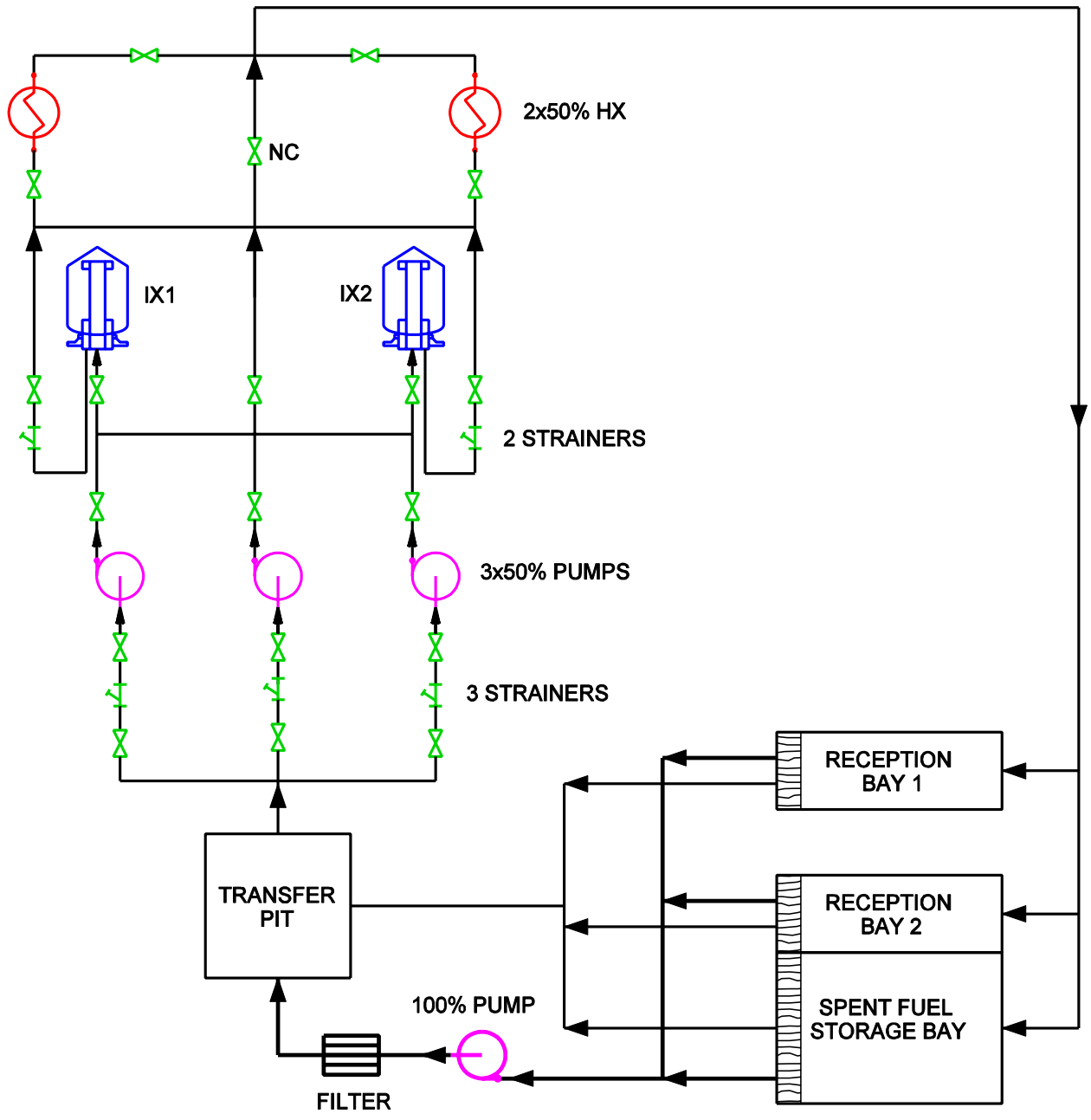

Figure 9.8-1 ACR-700 Spent Fuel Bay Cooling and Purification System

TABLE OF CONTENTS

SECTION **PAGE**

10. TURBINE GENERATOR AND AUXILIARIES 10-1

10.1 General 10-1
10.2 Turbine-Generator 10-3
10.2.1 Design Bases 10-3
10.2.2 Turbine-Generator Description 10-3
10.2.2.1 Turbine-Generator Components and Systems 10-4
10.2.2.2 Automatic Controls 10-5
10.2.2.3 Turbine Emergency Trip System and Protective Devices 10-6
10.2.2.4 Inspection and Testing Requirements 10-7
10.3 Main Steam Supply 10-8
10.4 Condensing System 10-9
10.4.1 Main Condenser 10-9
10.4.1.1 Design Bases 10-9
10.4.1.2 System Description 10-9
10.4.1.3 Test and Inspection 10-10
10.4.2 Main Condenser Air Extraction System 10-10
10.4.2.1 Design Bases 10-10
10.4.2.2 System Description 10-10
10.4.2.3 Tests and Inspection 10-11
10.4.3 Turbine Gland Seal System 10-11
10.4.3.1 Design Bases and Description 10-11
10.4.4 Turbine Bypass System 10-11
10.4.4.1 Design Bases 10-11
10.4.4.2 System Description 10-12
10.4.4.3 Tests and Inspection 10-12
10.5 Feedwater System 10-13
10.6 Condensate System 10-14
10.6.1 Design Bases 10-14
10.6.2 System Description 10-14
10.6.3 Tests and Inspection 10-14
10.7 Condensate Make-up and Reject System 10-16
10.7.1 Design Bases 10-16
10.7.2 System Description 10-16
10.8 Moisture Separator/Reheater Drains 10-17
10.8.1 Design Bases 10-17
10.8.2 System Description 10-17
10.9 Auxiliary Systems 10-18
10.9.1 General 10-18
10.9.2 Sampling System 10-18
10.9.3 Steam Drain System 10-19
10.9.4 Chemical Injection System 10-19

TABLE OF CONTENTS

SECTION **PAGE**

10.9.5 Condenser Circulating Water System 10-19

10. TURBINE GENERATOR AND AUXILIARIES

10.1 General

Each unit of the ACR-700 has a turbine generator system which includes one turbine generator with associated condensing and feedwater systems. The turbine generator is of the tandem compound, reheat condensing type, with one single-flow, high-pressure section and two double-flow, low-pressure sections. The turbine-generator is rated at 1800 rpm and gross nominal output of 753 MWe (under 1% steam generator blowdown).

The turbine-generator and auxiliaries are located in the turbine building and ancillary equipment is located within the reach of the turbine hall crane, wherever practical.

Provisions are made to ensure shutdown without damage to any equipment in case of a power outage. Pre-start and post-shutdown operations for each unit can be performed locally or from the main control room. Startup, normal operation and shutdown are controlled from the main control room, except when otherwise specified.

Steam, which cannot be utilized by the turbine during startup or load drop, is discharged to the condenser through the turbine bypass system. The turbine bypass system is sized to pass steam equivalent to 100% of reactor power initially, then 75% of reactor power continuously in order to avoid reactor shutdown.

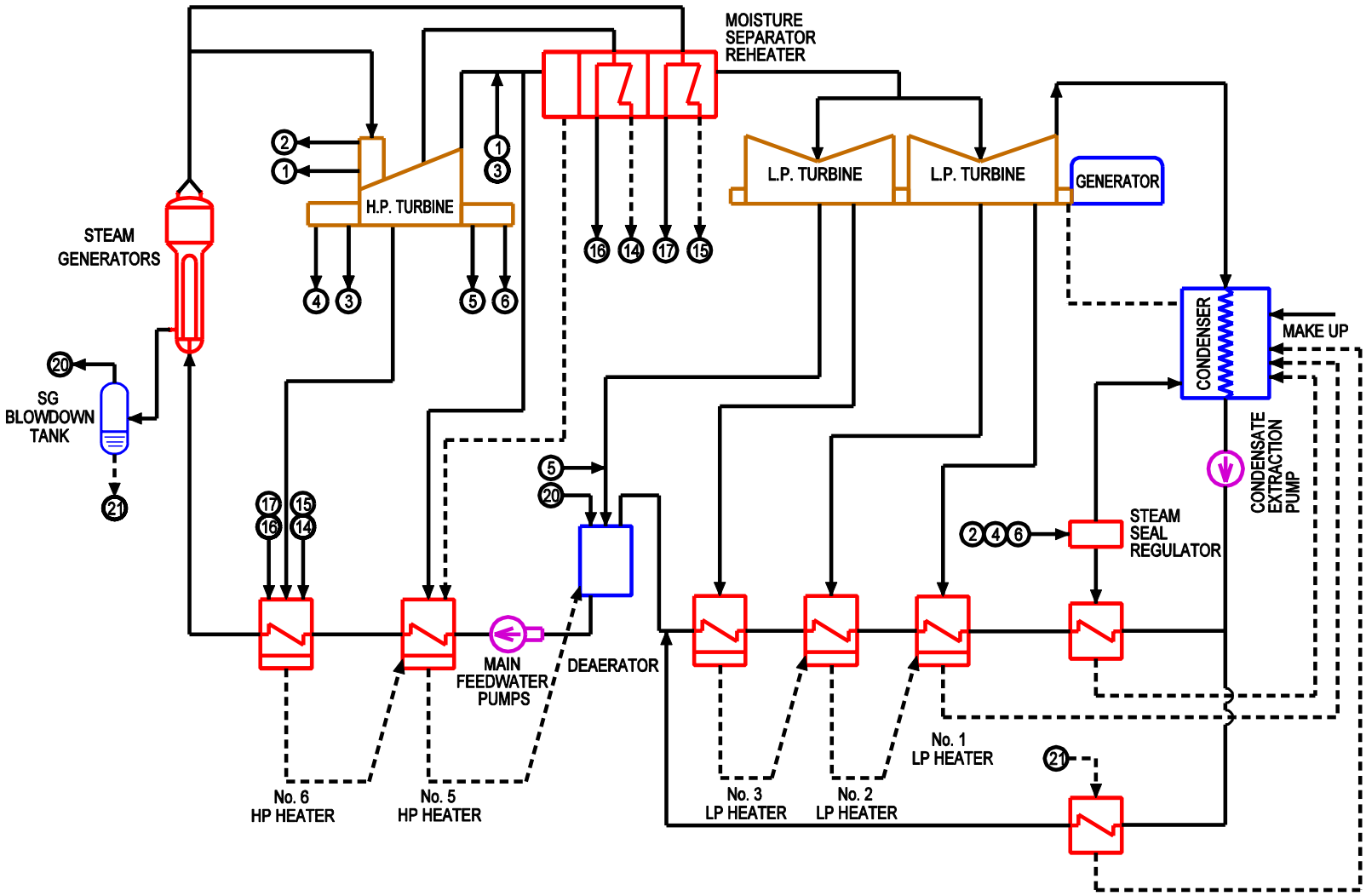

Figure 10.1-1 Turbine-Generator and Auxiliaries Flow Diagram

10.2 Turbine-Generator

The function of the turbine-generator is to convert thermal energy into electric power.

10.2.1 Design Bases

The following is a list of the principal design bases:

The turbine-generator is designed for the nominal conditions provided in Section 13, Table 13.2-1.

These design conditions correspond to the guaranteed reactor rating (100% power).

The turbine-generator is capable of accommodating the following loading conditions without tripping unless attributed to other factors:

a) An instantaneous load rejection of up to 100% increment of rated electrical capacity.

b) Following a complete loss of external load the turbine-generator will automatically run-back to house load and to near synchronous speed.

c) Operation at house load for a duration of at least six hours provided that condenser backpressure is at 6 kPa(a) or lower.

d) Any loading rate between zero and 5%/min may be selected by the operator. Unloading rate is same unless rapid unload selected (2.2%/sec).

10.2.2 Turbine-Generator Description

The reference turbine generator is designated TC4F-52 and consists of a turbine, a generator, moisture separator-reheaters, exciter, controls, and auxiliary subsystems. The major design parameters of the turbine generator are presented in Section 13, Table 13.2-1. The system components are described in this section.

The turbine is an 1800 rpm, tandem-compound, four-flow, reheat unit with 52-inch last stage blade length. The turbine includes one single-flow high-pressure turbine, two double-flow low-pressure turbines, and two moisture separator-reheaters with two stages of reheating. The direct-driven generator is conductor cooled. Other related system components include a turbine generator bearing lubrication oil system, turbine control system, a turbine gland seal system, a turbine generator supervisory instrumentation (TGSI) system, overspeed protective devices, turning gear, a generator hydrogen and seal oil system, a stator cooling water system, an exciter cooler, a rectifier section, and a voltage adjuster.

10.2.2.1 Turbine-Generator Components and Systems

10.2.2.1.1 Turbine-Generator Cycle Description

Steam from the main steam system enters the high-pressure turbine through four stop valves and four governing control valves. Cross-ties are provided both upstream and downstream of the stop valves to provide pressure equalization with one or more stop valves closed. A portion of the main steam is used for second-stage reheat of the steam supply to the low-pressure turbines. There are two steam extraction points in the high-pressure turbine. Steam from the first extraction point (high- pressure) is used for first-stage reheat of the two-stage reheater. Steam from the second extraction point is used for sixth-stage feedwater heating.

After expansion in the high-pressure turbine, the steam flows through the moisture separator-reheaters to remove entrained moisture and to superheat the steam, thus improving cycle efficiency. A portion of the cold reheat steam is used for fifth-stage feedwater heating. Hot reheat steam is distributed equally to the two low-pressure turbines through combined intermediate stop and intercept valves. In each low-pressure turbine there are four steam extraction points, the highest pressure extraction supplying the deaerator. The three other steam extraction points supply the remaining three stages of feedwater heating. After expansion in the low-pressure turbines, the steam is exhausted to the main condensers.

In addition to the external moisture separators, the last two low-pressure turbine stages are designed to remove any condensed moisture and drain it to the next lowest extraction. The moisture from the external moisture separators is drained to moisture separator drain tanks and from there it is pumped to the deaerator. The condensate from the first and second stage reheaters is drained to individual reheater drain tanks and from there to the sixth-stage feedwater heaters. The condensate is flashed into the heaters for heat recovery after which the residual condensate joins the other heater drains cascading down to the deaerator.

10.2.2.1.2 Lubricating Oil System

The lubricating oil system includes:

- turbine shaft-driven main oil pump (MOP),
- oil-driven booster pump,
- ac motor-driven motor suction pump (MSP),
- ac motor-driven turning gear oil pump (TGOP),
- dc motor-driven emergency bearing oil pump (EBOP),
- ac motor-driven jacking oil pump (JOP),
- oil coolers with switching device,
- ac motor-driven oil vapour extractor,
- lubricating oil piping and valves for turbine and generator,

- automatic startup device for the motor suction pump, turning gear oil pump and emergency bearing oil pump.

The motor suction pump and turbine gear oil pump/jacking oil pump are used during the startup of the turbine generator unit. The emergency bearing oil pump is started when the pressure at the oil tank drops to an unacceptable value and/or ac power to the pump is lost, to permit a safe shutdown.

An oil purification system is connected to the turbine main oil tank and includes:

- transfer pump,
- oil circulating pump,
- clean and dirty lube oil storage tanks,
- oil purifier.

10.2.2.1.3 Shaft Turning and Jacking Oil System

The following items are included:

- turning gear with protection, local control panel with push-buttons, lights and ammeters, jacking oil system.

The turning gear is designed for automatic or remote controlled engagement when the turbine speed falls and automatic disengagement when the unit speed increases from its normal on-turning gear speed of about 2.5 rpm.

Starting of the turning gear is possible only when sufficient lifting pressure is established by the jacking oil system.

10.2.2.1.4 Generator

The generator is of the three-phase armature rotating field type. The stator windings are cooled by low conductivity water and the stator core is cooled by hydrogen gas.

The excitation is of the static type, and the main power output from the generator to the step-up transformer is by means of an air-cooled isolated phase bus duct.

10.2.2.2 Automatic Controls

Automatic controls provide control of turbine speed and acceleration through the entire speed range, with several speed and acceleration rate settings. The automatic control system includes control of load and loading rate from no load to full load.

10.2.2.2.1 Control System Structure

A digital electro-hydraulic controller (EHC) measures the turbine speed with magnetic pick-ups from the teeth of a gear mounted to the turbine rotor in lieu of by the hydraulic / lever linkage, and controls the valve position by driving a servo valve.

10.2.2.2.2 Control System Features

a) High reliability hardware system - The main components of the electro-hydraulic controller are micro processor based digital controllers.

b) Duplex control system - The controller is a duplex system including CPU, PI/O and power unit. Each system is always in operation: one in control and one in stand-by. When any malfunction occurs in the system currently in control, the stand-by system is automatically placed into service of control.

10.2.2.3 Turbine Emergency Trip System and Protective Devices

10.2.2.3.1 General

The purpose of the alarm and trip circuits is to systematically remove a dangerous operating condition from the turbine-generator before any damage has resulted by operating either unit in an unsafe mode. This system will trip the unit by closing all valves and shutting the turbine down on the following conditions:

1. Turbine approximately 11% above rated speed
2. Excessive thrust bearing wear
3. Loss of bearing lubrication supply pressure
4. Condenser pressure increases to a predetermined limit
5. Loss of hydraulic fluid supply pressure
6. Exhaust hood temperature increases to a predetermined limit
7. Generator trip signals
8. External trip signals including reactor trip, steam generator high-high level trip and remote manual trip in the control panel
9. Manual mechanical trip at turbine front standard
10. Drain level in moisture separator increases to a predetermined limit
11. High vibration
12. EHC system failure
13. Loss of generator cooling water.

10.2.2.3.2 Protective Devices

To protect the unit from an unexpected serious damage and secure long life of the unit, the following protective devices are provided:

1. Main stop valve (high pressure emergency stop valve)
2. Reheat stop valve (low pressure emergency stop valve)
3. Emergency governor and emergency trip valve
4. Back-up overspeed trip (electrical)
5. Master trip solenoid
6. Master trip handle
7. Moisture separator drain level high trip
8. Vibration high trip
9. Thrust bearing wear detector
10. Bearing oil pressure low trip
11. Vacuum trip
12. Hydraulic fluid pressure low trip
13. Low pressure exhaust hood temperature high trip
14. Low pressure exhaust hood water spray device
15. Atmospheric relief diaphragm on low pressure exhaust hood
16. Shaft grounding device
17. Overspeed protection relay (in EHC panel)

10.2.2.4 Inspection and Testing Requirements

Major system components are readily accessible for inspection and are available for testing during normal plant operation. Controls and protective devices associated with each turbine-generator component will be tested regularly. Various turbine trips will be tested in sequence prior to unit startup.

10.3 Main Steam Supply

The main steam system supplies the steam generated in the steam generators to the turbine-generator system and other auxiliary systems for power generation. Also refer to Section 5.2.5 for Steam System description.

Steam is supplied to the turbine at a pressure of 6.40 MPa(g) at the steam generator outlet nozzle and 6.20 MPa(g) at the turbine stop valve at a rate of 3,939,610 kg/h. The steam temperature is 279°C with maximum moisture content of 0.3% under normal operating conditions at full power at the turbine stop valve.

10.4 Condensing System

10.4.1 Main Condenser

The main condenser is the heat sink for the steam cycle. During normal operation it receives and condenses the exhaust from the turbine generator. During abnormal operation it receives the bypass steam from the condenser steam discharge valves (turbine bypass). It receives other miscellaneous steam cycle flows, drains and vents.

The main condenser serves as a heat sink in the initial phase of reactor cooldown during a normal plant shutdown.

10.4.1.1 Design Bases

a) The main condenser provides a heat sink for the exhaust steam from the turbine generator and other cycle flows.

b) The main condenser provides hotwell storage for surge capability required during load excursions during normal and abnormal plant operations.

c) The main condenser accommodates steam flow corresponding to 100 percent of the rated reactor power during short periods, and a continuous steam flow equivalent to 75% reactor power during periods of turbine bypass operation.

d) The main condenser removes noncondensable gases from the condensing steam through the condenser air extraction system as described in Section 10.4.2. It also provides for deaeration of the condensate such that the oxygen content does not exceed 10 ppb under any normal operating condition. This minimizes the occurrence of corrosion within the secondary system.

10.4.1.2 System Description

The main condenser is designed with two separate shells. Each shell is connected to one of the two low-pressure turbine exhausts by an expansion joint. The tubes in each shell are oriented in a direction transverse to the longitudinal axis of the turbine-generator.

The following items are included with the main condenser:

- tube bundles, tubesheets and tube supports
- water boxes
- shells, condenser necks and hotwells
- nozzle inlets for turbine bypass piping and internal spargers
- instruments and accessories
- sponge-ball tube cleaning system.

The condenser shells have divided water boxes. Each shell has two bundles, each of which is connected to the water boxes. Each shell is divided into two hotwells longitudinally by a vertical partition plate. The condensate pumps take suction from these hotwells. The shells are accessible for inspection.

The condenser tubes are of titanium and the tubesheets are of carbon steel with titanium overlay. The condenser shell is of the single tubesheet design. The tubes are rolled and seal welded to the tubesheets.

Rupture diaphragms are provided to protect the condenser and turbine exhaust hood against overpressure.

During normal operation, exhaust steam from the low-pressure turbines is directed downward into the condenser shells through exhaust openings in the bottom of turbine casings and is condensed. The condenser also receives flows such as the feedwater heater drains, vents, turbine gland sealing and other miscellaneous drains.

During the initial cooling period after plant shutdown, the main condenser removes decay heat from the steam generators through the turbine bypass system. In the initial period following a turbine trip from full load, a quantity equivalent to 100% of main steam flow can be bypassed to the condenser without increasing the condenser back pressure to the turbine alarm set point or exceeding the allowable turbine exhaust pressure. Thereafter, a flow of steam equivalent to 75% reactor power can be bypassed continuously to the condenser.

10.4.1.3 Test and Inspection

The condenser shells are hydrostatically tested after erection. The condenser shells, hotwells, and water boxes are provided with access openings to permit inspection and / or repairs.

10.4.2 Main Condenser Air Extraction System

10.4.2.1 Design Bases

The main condenser air extraction system is designed to establish and maintain the shell-side vacuum by continuously removing noncondensable gases.

10.4.2.2 System Description

The system comprises three (3) 50% capacity vacuum pumps for normal operation and one (1) hogging pump for startup.

The condenser air extraction system is also designed to remove noncondensable gases any time the turbine bypass system is in operation. In the event the condenser air extraction system malfunctions and the condenser becomes unavailable, heat rejection from the steam generators is achieved by the atmospheric steam discharge valves (ASDVs) and the main steam safety valves

(MSSVs). The system is provided with radiological monitoring in the exhaust piping from the air exhausters to monitor primary-to secondary side steam generator tube leakage.

10.4.2.3 Tests and Inspection

The main condenser air extraction system is tested and inspected in accordance with the applicable codes and standards prior to operation. Periodic in-service tests and inspections of the main condenser air extraction system are performed in conjunction with the scheduled maintenance outages.

10.4.3 Turbine Gland Seal System

The turbine gland seal system controls air leakage into and steam leakage out of the main turbine to acceptable levels.

10.4.3.1 Design Bases and Description

a) The turbine gland seal system is designed to prevent air leakage into and steam leakage out of the main turbine casing.

b) The turbine gland seal system condenses the steam leakage, returns the condensate to the condenser and exhausts the noncondensable gases to the atmosphere.

c) Two automatic steam inlet (main and auxiliary steam) regulators (with motor-operated bypass valves) and one dump regulator for startup and emergency operation.

d) One 100% capacity gland steam condenser for steam returned from gland seals and valve stems and two vapour extractors.

e) Piping, valves and accessories for the steam supply, leak-off and drains.

10.4.4 Turbine Bypass System

10.4.4.1 Design Bases

The turbine bypass system is designed to accomplish the following functions:

a) Accommodate load rejections of any magnitude without tripping the reactor or lifting the main steam safety valves (MSSVs).

b) Control heat transport system thermal conditions to prevent the opening of safety valves.

c) Maintain the heat transport system at hot zero power conditions.

d) Control heat transport system thermal conditions when it is desirable to have reactor power greater than turbine power; e.g., during turbine synchronization.

e) Provide a condenser interlock such that a poor condenser vacuum inhibits opening of the turbine bypass valves.

10.4.4.2 System Description

The turbine bypass system consists of eight (8) air operated condenser steam dump valves (CSDVs) and associated piping and steam distributors (spargers) inside the condenser. The CSDVs direct steam to the condenser following a turbine trip to control the steam pressure rise. The turbine bypass system is designed to accept steam flow corresponding to 100% maximum continuous rating steam flow for a period of approximately one (1) minute, and a flow of steam equivalent to 75% reactor power thereafter. At turbine loads corresponding to steam flow less than 75% equivalent reactor power, where it is necessary to maintain a higher reactor power, the excess steam is handled by the CSDVs.

The CSDVs are air-operated control valves with a combined capacity of 100% of rated steam flow. These valves are normally controlled by the steam generator pressure control program but are capable of remote or local, manual (handwheel) operation. When operating automatically, the valves modulate full open or full close in a minimum of 15 seconds and a maximum of 25 seconds. In response to a quick closing signal from the steam bypass control system, they are designed to close in 3 seconds.

Their operating characteristics are as follows:

- During normal operation, they are on pressure control with an offset to bias them closed.
- During poison prevent, their steady-state opening is proportional to the power mismatch between poison prevent level and actual turbine steam consumption.
- Their opening is conditioned by the condenser protective system. The valves may be automatically tripped by the condenser protective system; in this event, a manual reset is required before they can be reopened.
- On a turbine trip, a signal is applied to open quickly. They will revert to the pressure control mode after they have opened fully.
- Provision is made to allow the operator to open them from the PDS.

10.4.4.3 Tests and Inspection

Before the turbine bypass system is commissioned, all system valves are tested to confirm opening and closing times. All system piping is inspected and tested in accordance with the relevant requirements of the applicable codes. Each turbine bypass valve is equipped with isolation valves on the main steam header side.

10.5 Feedwater System

Refer to Section 5.2.5 for feedwater system description.

10.6 Condensate System

The condensate system provides condensate from the condenser hotwell to the deaerator. The feedwater system heats up the water from the deaerator to the steam generators.

10.6.1 Design Bases

a) The condensate system has the capacity to maintain the level in the deaerator storage tank when the auxiliary feedwater pump is in operation. The condensate piping to the deaerator is designed to prevent steam/water hammer in the piping and deaerator during low loads/start-up.

b) Means to heat the deaerator storage tank are provided to heat the feedwater to the minimum permissible temperature, before pegging steam is available for this purpose.

c) Copper and copper alloys are avoided in the steam, condensate and feedwater systems to keep the precipitation of copper-based corrosion products in the steam generators to a minimum.

d) The deaerator storage tank inventory storage requirement for each unit is about 5 full power minutes of water at normal operating level. The condensate system also has an inventory of 5 full power minutes of condensate totally in the condenser hotwell and reserve feedwater tank.

10.6.2 System Description

The condensate system includes:

- Two 100% capacity condensate extraction pumps complete with electric motor drives, controls, instrumentation and accessories
- One auxiliary condensate extraction pump (Class III power) with electric drive, controls, instrumentation and accessories
- Two minimum flow recirculation systems, one common to the two full capacity condensate extraction pumps and one for the auxiliary condensate extraction pump

Normally, one 100% capacity condensate extraction pump is used to pump the main condensate through the low-pressure regenerative feed heating system up to the deaerator. Condensate extraction pump minimum flow recirculation is returned to the condenser hotwells.

10.6.3 Tests and Inspection

The pumps will undergo the following shop tests:

- Hydrostatic test
- Performance test including cavitation test
- Vibration measurements

- Material tests
- Non-destructive examination, where specified

10.7 Condensate Make-up and Reject System

The condensate make-up and reject system serves to receive the excess condensate and/or to supply the condenser with make-up water during normal and abnormal plant operations.

10.7.1 Design Bases

The system is designed to supply make-up water to the condensers on demand. The system is also designed to receive the excess condensate from the feedwater and condensate system under normal and abnormal plant operating conditions.

10.7.2 System Description

The system consists of a reserve feedwater storage tank, normal and large capacity make-up and reject control valve stations, interconnecting piping, valves, instrumentation and controls. The reserve feedwater storage tank serves as a storage unit for the condensate system.

10.8 Moisture Separator/Reheater Drains

The steam condensed in the moisture separators/reheaters of the turbine generator is drained to the high pressure heaters.

10.8.1 Design Bases

The system is designed to drain all the condensate formed in the reheaters due to condensation of the heating steam, and all condensate removed in the moisture separators from the wet exhaust steam from the high pressure turbine.

Proper level is maintained in the drain tanks to assure that steam does not escape from the moisture separators/reheaters.

10.8.2 System Description

The moisture separator and reheater drains system consists of:

- moisture separator drains, drain tanks, piping and valves,
- first stage (low pressure) reheater drains, drain tanks, piping and valves,
- second stage (high pressure) reheater drains, drain tanks, piping and valves,
- controls and instrumentation.

The drains from the moisture separators and reheaters are drained to the respective drain tanks by self venting flow. An emergency drain is provided from each of the drain tanks to the condenser. All the drain tanks are provided with pneumatically operated level control valves to maintain a set level in the drain tanks.

10.9 Auxiliary Systems

10.9.1 General

The turbine generator system is provided with other necessary auxiliary systems, including the following:

- Sampling System: Permits condensate and feedwater samples to be taken for chemical analysis.
- Steam Drain System: Recovers heat and treated water (condensate) from the various equipment drains.
- Chemical Injection System: Used to add chemicals to the condensate and feedwater systems to maintain and control the chemistry within the specified ranges.

10.9.2 Sampling System

Continuous sampling is provided for the condensate and feedwater systems. Online chemical analyses are provided where necessary. The online analyses are supplemented by samples taken to the chemistry laboratory and analyzed there.

The sampling system is provided to permit continuous monitoring of condensate and feedwater chemistry in the water quality control room and recording in the chemical control room, and is comprised of the following:

a) Sampling points, tubing, sampling valves and coolers to reduce the temperature of samples.

b) Sodium analyzers to continuously monitor sodium concentration at the outlet of each condenser hotwell and at the discharge of the main and auxiliary condensate extraction pumps to indicate condenser tube leakage.

c) pH analyzer to continuously monitor the discharge of the high pressure feedwater heaters for the indication of all volatile treatment conditions in the system. Manual valving also makes available pH monitoring of the discharge of the condensate extraction pumps and the boiler feed pumps.

d) Dissolved oxygen analyzers to continuously monitor oxygen concentration upstream of the deaerator, at the discharge of the boiler feed pumps and other mixed sampling lines, and to determine air leak tightness of the condenser and the effectiveness of the deaerator.

e) Conductivity analyzers to continuously monitor conductivity of combined steam generator water blowdown to monitor pH control agent concentration and general system chemistry, on the outlet of each condenser hotwell, and at various points within the hotwells to detect leakage of cooling water through condenser tube failure.

10.9.3 Steam Drain System

All the steam drains are collected, where possible, into the condenser in order to recover not only the treated water (condensate) but also its heat content, and to prevent water damage to the turbine.

10.9.4 Chemical Injection System

The following items are included:

- Stainless steel tanks for the mixing and storage of dilute hydrazine and other chemicals,
- Chemical injection pumps for the different chemicals,
- The chemical injection points at the condensate extraction pumps discharging and at the feedwater system downstream of steam generator level control valves.

The system is complete with controls and instrumentation.

10.9.5 Condenser Circulating Water System

The system supplies the cooling water required by the steam turbine condenser. The cooling medium is raw water from sea, lake or river.

Two 50% capacity circulating water pumps are located in the pumphouse for each unit, each pump having independent suction from the intake channel.

The pumps operate normally in parallel, but continuous smooth unit operation is possible with one pump, at a discharge rate which exceeds 60% of the total rated discharge for two pumps.

The circulating water is distributed to the condenser shells and then discharged into the outfall or routed to the cooling tower (for closed loop option). Each pump discharge and the inlets and outlets of the condenser water boxes are provided with motorized butterfly valves.

The condenser circulating water is strained of small debris and fish that pass through the trash racks by self-cleaning, dual-flow travelling screens.

A continuous, on-line sponge-ball condenser tube cleaning system is incorporated to minimize condenser tube fouling.

Due to the large size of the piping connections, expansion joints are employed in the cooling eater piping connections to the condensers. These joints are provided with control units to prevent excessive movement of the expansion joints.

TABLE OF CONTENTS

SECTION **PAGE**

11. RADIOACTIVE WASTE MANAGEMENT 11-1

11.1 General 11-1
11.1.1 Decontamination Facilities 11-2
11.1.2 Decontamination Practice 11-2
11.2 Radioactive Materials Sources and Pathways 11-3
11.2.1 Source Terms 11-3
11.2.1.1 Heat Transport System 11-3
11.2.1.2 Moderator System 11-4
11.2.1.3 Moderator Cover Gas System 11-4
11.2.1.4 Fuel Handling Systems 11-4
11.2.1.5 Spent Fuel Bay Systems 11-4
11.2.1.8 Off-Gas Management System 11-5
11.2.1.9 D_2O Clean-Up System 11-5
11.2.1.10 Spent Resin Storage Tanks 11-5
11.2.1.11 Steam and Feedwater System 11-5
11.2.1.12 Decontamination Centre 11-6
11.2.1.13 Radioactive Liquid Waste Management System 11-6
11.3 Solid Radioactive Waste Management 11-7
11.3.1 Types and Sources of Wastes 11-7
11.3.2 Spent Fuel 11-8
11.3.3 Spent Resin 11-8
11.3.3.1 Spent Resin Handling System 11-8
11.3.3.2 Handling and Storage 11-8
11.3.4 Spent Filter Cartridges 11-9
11.3.5 Non-Combustible and Combustible Wastes 11-10
11.3.5.1 Waste Characteristics 11-10
11.3.5.2 Handling and Storage 11-10
11.3.6 Organic Fluids, Oil, Chemicals, etc. 11-10
11.3.7 Solid Radioactive Waste Storage Facility 11-11
11.3.8 Interim Fuel Storage Facility 11-11
11.4 Liquid Radioactive Waste Management System 11-13
11.4.1 Design Bases 11-14
11.4.2 Design Description 11-14
11.4.3 Liquid Waste Decontamination Facility 11-16
11.5 Gaseous Radioactive Waste Management 11-17
11.5.1 Gaseous Waste Control 11-17
11.5.1.1 Filters 11-17
11.5.1.2 Vapour Recovery for the Reactor Building 11-17
11.5.1.3 Off-Gas Management System 11-18
11.6 Effluent Radiological Monitoring 11-19
11.6.1 Liquid Effluent Monitoring System 11-19

TABLE OF CONTENTS

SECTION **PAGE**

11.6.2 Gaseous Effluent Monitoring System 11-20
11.6.2.1 Stack Monitoring System 11-20
11.6.2.2 Tritium Monitoring 11-21
11.6.2.3 Carbon-14 Monitoring 11-21
11.6.3 Containment Monitoring 11-22
11.7 Environmental Monitoring 11-23
11.8 References 11-24

11. RADIOACTIVE WASTE MANAGEMENT

11.1 General

Facilities are provided for storage or dispersal of all radioactive gaseous, liquid and solid wastes. The design of these facilities is such that radiological exposure of operating staff and the public is well within the limits recommended by the International Commission on Radiological Protection.

Adequate systems are provided to treat radioactive gaseous and liquid wastes, so that the quantity and the concentration of radioactive discharges are kept within prescribed limits. In addition, the as low as reasonably achievable (ALARA) principle is applied to minimize liquid and gaseous releases from the plant. Equipment is provided for monitoring such effluents prior to or during discharge to the environment, and releases are controlled and the discharges are maintained below prescribed limits.

The design phase includes a continuing review of the plant systems as they develop, to ensure that the volumes and activity levels of the wastes generated in the plant can be managed by the waste management systems The equipment, tankage and facilities for handling radioactive waste liquids and solids are flexible enough to cope with the anticipated increase in waste volume and activity during periods of major maintenance or adverse reactor operation.

Solid radioactive waste handling facilities are also provided on site, for storage of those materials until such time as they can be transported to a designated off-site facility as per local regulations.

The generation, movement and control of active wastes are to some extent specific to the plant type. For the CANDU pressurized heavy water design, the origins of the waste activity can be classified in the following groups:

a) Fuel fission products

b) System material activation products

c) System fluid activation products

Radionuclides in all of these categories remain predominantly at their place of origin, but may be transported to and ultimately reach one or more parts of the active waste management system. Thus, for example, fuel fission products, which may escape from fuel defects, while in the core or in the fuel handling equipment are filtered, trapped or removed in the heat transport system and its auxiliary systems. This leads to disposal of the majority of the fission products in spent resin or filter elements as solid wastes. Radionuclides, which escape from the heat transport system boundary, reach the building atmosphere. They are collected into the active ventilation ducts, filtered and released under control in the gaseous radioactive waste management system or, if deposited and washed down, they reach liquid radioactive waste facilities through the active drainage system.

Similarly, and as a specific feature of the CANDU pressurized heavy water plant, the tritium produced by activation of the heavy water in the moderator D_2O circuits may escape as tritiated

water. Unless retained in the D_2O collection or D_2O vapour recovery systems, it ultimately arrives in the active liquid or gaseous radioactive waste management systems.

Provisions are made for appropriate decontamination facilities for both personnel and equipment, and appropriate measures are taken for handling any radioactive waste arising from decontamination activities.

Components being serviced are subjected to decontamination procedures, either in situ or in special decontamination facilities, for the removal of fission products or activation products. The residue from these procedures is directed to the applicable radioactive waste management systems.

11.1.1 Decontamination Facilities

The decontamination facilities are designed for routine decontamination of re-usable material and equipment, such as fuelling machine components, small hardware, plastic protective clothing and breathing apparatus, D_2O drums, flasks, etc. The decontamination equipment is arranged to permit larger objects to be handled on a non-routine basis.

The equipment allows remote handling of the components for decontamination of the bulk of the loose and fixed contamination prior to maintenance and/or repairs. Fume-hoods, benches, and sinks are provided for any required manual cleaning, and these are located in the low-activity areas of the decontamination facility. Materials and equipment entering the decontamination areas are monitored to check activity levels. The cleaned articles are monitored before being released for service.

The cleaning solutions and wash water contain activity, and thus the drains from the decontamination areas are connected to the radioactive liquid waste management system.

11.1.2 Decontamination Practice

The decontamination practices depend on the level of decontamination of equipment or parts and the type of contamination; i.e., loose or fixed. Should some equipment be shipped off site, no loose contamination would be allowed and residual fixed contamination should meet the imposed limits for its transfer.

a) Heavy Equipment:

- A segregated ‘plastic area’ is set up for controlled access.
- Depending on the level and type of contamination, some of the decontamination means include the use of vacuum, sandpaper, grinding, solvents, and chemicals.
- Ventilation tents may need to be set up (depending on contamination level) with a filter train to trap contaminants. The used filters are disposed of as solid radioactive waste.
- Any liquid from the decontamination goes to the radioactive liquid waste management system.

b) Small Equipment:

Equipment is brought to the decontamination centre where there are fume hoods. Decontamination practices similar to those described above are also applied and could include the use of a combination of vacuum cleaning, grinding, chemicals, etc.

11.2 Radioactive Materials Sources and Pathways

11.2.1 Source Terms

The heat transport system (HTS) and the moderator system are the primary sources of radioactive material. Activity builds up in these systems as a result of fission of the fuel, activation of the systems' components and their corrosion products, and activation of the fluid in the systems and its additives. A small fraction of these radioactive materials escape by leakage or transfer to other systems, such as the steam and feedwater system and the spent fuel bay, to become secondary sources of radioactive material.

The radionuclide concentrations of fission products and activation products in various reactor process systems are expected to be similar to those encountered in operating CANDU 6 reactors or PWRs, as applicable. The fission product concentrations in the HTS coolant will reflect the actual fuel performance. These concentrations vary depending on the fuel performance and purification flow rates, and daily fluctuations may occur.

This section will provide the pathways and sources of radioactive material accumulated in the various systems of the ACR-700 reactor.

11.2.1.1 Heat Transport System

The heat transport system is the main source of radioactive materials as it contains the fuel. As the fuel is irradiated, fission products are formed in increasing quantities until the fuel achieves the equilibrium state. These fission products are retained within the individual fuel elements of the fuel bundle unless there is a fuel element sheath failure, when some of the fission products are released to the heat transport coolant.

Metals in contact with the coolant in the heat transport system corrode slowly. Some of the corrosion products dissolve or become suspended in the coolant and so may pass through the neutron flux in the reactor core. Thus the neutron activation of corrosion products is essentially limited to their transit time through the reactor core. There is a continuous exchange of dissolved and suspended materials between the coolant and the surfaces of the system and consequently there is a gradual build-up of radioactive material on the system surfaces to produce radiation fields. Some of the radioactive materials may escape from the heat transport system and become a secondary source of radioactive material.

Leakages are collected and/or recovered by the collection systems. Thus although the leakage will inevitably carry both fission and activation products, the management systems serve as a

means of control within the plant and as one or more of the barriers to their release to the environment.

11.2.1.2 Moderator System

The moderator system is the other major source of radioactive material. It operates at a low temperature and pressure, however, and so has a low water escape rate. The moderator contains only activated corrosion products and heavy water activation products.

11.2.1.3 Moderator Cover Gas System

The moderator cover gas system provides an inert gas cover over the surface of the moderator in the calandria and overpressure relief ducts. It prevents corrosion and provides pressure control in the calandria assembly under various operating conditions. The system circulates the gas to prevent significant concentration of D_2 in the cover gas by recombining D_2 with O_2 to form heavy water, thus maintains the D_2 and O_2 concentrations well below the levels at which an explosion hazard would exist.

11.2.1.4 Fuel Handling Systems

The new fuel and spent fuel handling systems are both potential sources of radioactive materials.

The new fuel handling system is considered a negligible source. New fuel contains small quantities of uranium daughter products but since the fuel is enclosed in a sheath and there is no driving force to move the uranium daughters out of the sheath, very little radioactive material escapes.

The spent fuel handling systems, on the other hand, move spent fuel bundles containing large inventories of fission products. However, fuelling operations do not result in any significant release of radioactive material because the fuel sheath is intact.

11.2.1.5 Spent Fuel Bay Systems

The spent fuel bay stores the fuel bundles discharged from the reactor. The bay water provides both shielding and cooling. Radioactive material enters the spent fuel bay water by escape of fission products from the irradiated bundles, some removal of crud from the fuel element surface to release activated corrosion products into the spent fuel bay water and some transfer of radioactive materials with the small quantity of light water carried over with the fuel bundles. All of the above contributes to the inventory of radioactive material in the spent fuel bay water.

11.2.1.6 Shield Cooling System

The shield cooling system recirculates light water, which is irradiated by the reactor's neutron flux. It contains some activated corrosion products and very low levels of tritium.

The calandria vault, which contains light water and serves as both a thermal shield and biological shield, and the end shields reduce the radiation fields in the vicinity of the reactor. Activity is produced due to the residual neutron flux in the calandria vault water. This flux activates the water, the lithium and corrosion products producing tritium and activated corrosion products. This activity may escape with leaking shield cooling water and add to the activity entering the active liquid waste management system. Station operating experience shows that the shield cooling system does not contribute significantly to the total activity in the radioactive liquid waste management system.

11.2.1.7 Annulus Gas System

The annulus gas acts as a thermal barrier between the pressure tube and the calandria tube. The annuli are filled with carbon dioxide, an inert gas selected for its low argon and nitrogen impurity levels. This ensures that there is little ^{41}Ar production in the annulus gas.

11.2.1.8 Off-Gas Management System

The off-gas management system is designed to ensure that the active noble gas releases to the environment do not exceed acceptable levels. Noble gases are routed to the off-gas management system for treatment before release.

11.2.1.9 D_2O Clean-Up System

Heavy water recovered from leakage, spills and deuteration of the moderator ion exchange resins, must be cleaned up before being upgraded. The moderator D_2O cleanup system is designed to remove particulate, organic and dissolved ionic impurities from recovered heavy water. The water to be cleaned comes from the moderator D_2O collection system, D_2O vapour recovery system, and moderator deuteration systems.

11.2.1.10 Spent Resin Storage Tanks

The spent resin is transferred from the various process systems (e.g., moderator purification, D_2O clean-up, etc.) via the resin transfer system into a spent resin storage tank. If the water level in the storage tank exceeds the high operating level, the water would overflow either to the adjacent tank or to the sump.

11.2.1.11 Steam and Feedwater System

During normal plant operation, with no primary to secondary side coolant leakage as the result of leaking steam generator tubes, the only radioactive material, which is transferred to the

secondary side coolant, is tritium. Tritium, in its gaseous form, like hydrogen and deuterium, can permeate through the steam generator tubing. Considering that light water is the coolant, the tritium production rate is negligible and thus the tritium concentration in the secondary-side water will also be negligible.

Any steam generator tube failure results in the transfer of some of the heat transport coolant together with the associated radioactive materials from the heat transport system to the steam generator secondary side water. Such failures result in the release of radioactive materials to the environment but not large quantities as to exceed environmental release limits. The occurrence of such failures necessitates a shutdown to locate and plug failed tubes.

11.2.1.12 Decontamination Centre

During normal operation of a nuclear power plant, tools and equipment become contaminated. It is desirable to recover and reuse the equipment and tools. At times it is also desirable to decontaminate equipment prior to its repair to reduce the radiation fields emanating from the equipment, thereby reducing the operator dose. A decontamination centre results in solutions containing radioactive materials, which may be sent to the active liquid waste management system.

Since the equipment and tools brought to the decontamination centre are generally dry, very little heavy water and hence very little tritium is carried into the centre and so very little tritium is associated with either the liquid or gaseous effluents from the decontamination centre. The radioactive materials adhering to the surface of the equipment are, in general, the long-lived fission and activation products.

During the normal operation of the decontamination centre, some discretion must be used to segregate high and low activity wastes and measurements of active liquid wastes are required prior to release to the active liquid waste system. In this way, highly radioactive solutions may be segregated and treated or stored. The small volumes produced in the decontamination centre are much easier to treat than when they are diluted into the large volume in the active liquid waste management system.

11.2.1.13 Radioactive Liquid Waste Management System

The radioactive liquid waste management system provides for the collection, storage, treatment (when necessary), and dispersal of any radioactive liquid waste produced by the station. The main components of the system are the concrete storage tanks.

11.3 Solid Radioactive Waste Management

Solid radioactive wastes are produced throughout the life of the nuclear power plant during normal operation, maintenance and shutdown. Solid waste management includes the facilities to handle the following:

- Spent fuel
- Spent resins
- Spent filter cartridges
- Low activity solid wastes
  - Non-combustible objects (metal, glass, etc.)
  - Combustible waste (paper, rags, etc.)
- Organic fluids, oil and chemicals, etc.

The basic design includes facilities for all of these materials to be collected in the plant and prepared for on-site storage or off-site shipment by the utility. The purpose of this section is to describe how to handle and store solid radioactive waste.

11.3.1 Types and Sources of Wastes

Radioactive solid wastes are produced on a continuous basis. The wastes (other than spent fuel), on a practical basis, can be assigned to one of the following four classifications:

a) Spent resins (from both ordinary and heavy water radioactive circuits).

b) Spent filter cartridges (from both ordinary and heavy water radioactive circuits).

c) Low activity solid wastes. (These may be classified as combustible and non-combustible, or as compactable and non-compactable.)

d) Organic fluids, oils and chemicals, etc. (These small volumes of liquids whose radioactive content is considered too high to allow discharge and non-aqueous contaminated liquid wastes, are immobilized for disposal.)

The estimated average annual quantities of solid radioactive waste produced by an ACR-700 plant are shown in Table 11.3-1.

In addition, there will be occasional radioactive solid wastes such as the seal discs from the pressure tube seal plugs, piping, pressure tubes and other miscellaneous reactor components, heat transport and moderator system components. Some of these components will have a relatively high specific activity.

Each type of waste is handled and stored differently as described below.

11.3.2 Spent Fuel

For an interim storage period, the spent fuel is stored in the spent fuel storage bay at a site. After an appropriate cooling period, the spent fuel can be stored on a dry interim storage facility. Handling and storage of the spent fuel is described in Section 9.8.1.

11.3.3 Spent Resin

11.3.3.1 Spent Resin Handling System

The spent resin handling system provides for the following requirements:

a) the spent resin handling system shall be provided with a sufficient number of tanks for the collection and temporary storage of non-moderator and moderator contact resin,

b) to provide representative sample of liquid form,

c) to measure and indicate the level of water in the storage tanks,

d) to permit the recovery if the spent resins after an initial cooling off period for both non-moderator contact and moderator contact,

e) the resins shall be segregated into two categories: non-moderator and moderator contact to reduce the overall life-cycle cost of the resins,

f) venting of the non-moderator resin tanks shall be provided by the active ventilation system,

g) the moderator resin tanks shall be ventilated through a vapour-recovery unit to recover D_2O vapour and to control possible tritium escapes from the tanks.

h) the spent resin storage tanks and attached piping up to and including the first normally closed valve are seismically qualified to a DBE Category ‘A’.

i) shielding is provided for the spent resin transfer line to limit the dose rates in areas, which may be occupied during short-duration, spent resin transfers.

11.3.3.2 Handling and Storage

The spent resin production is from the heat transport purification system, the moderator purification system, the spent fuel bay cooling and purification system, the shield cooling system, heavy water cleanup system, and the radioactive liquid waste management system. The total annual waste from these sources average around 6 m^3/a based on CANDU 6 experience, as shown in Table 11.3-1.

Steel-lined concrete storage tanks are provided in the vicinity of the reactor building for spent resin storage. An accessible wall of these tanks contains all the necessary tank fittings.

The tanks will be airtight to stop any venturi effects and the method of transfer of spent ion exchange resin to the interim waste storage at site is by slurry to the storage tanks. Resin mixing capability is provided in each tank, resin dewatering, and complete draining capabilities are also

provided. The non-moderator contact tanks are vented to the reactor auxiliary building ventilation system, while the moderator contact tanks are ventilated through a vapour recovery unit to recover D_2O and control possible tritium escapes from the tanks.

In order to remove resin from the non-moderator contact storage tank a mobile dewatering system is required with a dedicated resin mixing and resin transfer pump. The resin-mixing pump provides the motive force to fluidize and mix the reins in the spent resin tanks, to transfer water between non-moderator contact storage tanks and to discharge excess water from the spent resin tank to the radioactive liquid waste management system. The resin transfer pump provides the motive force for recirculation of spent resin between tanks, and also is used to transfer resin to a cylindrical waste container.

In order to remove resin from the moderator contact storage tank a mobile D_2O-extraction system is required with a dedicated D_2O resin mixing and D_2O resin transfer pump. The D_2O resin-mixing pump provides the motive force to fluidize and mix the resins in the spent resin tanks and to discharge the D_2O by piping into the D_2O clean-up system and upgrading before the heavy water would be introduced back to the moderator system. The D_2O resin transfer pump provides the motive force for recirculation of spent resin between tanks, and also is used to transfer resin to a cylindrical waste container.

The storage tanks are envisaged for temporary storage of resin, for up to 5 years, after which the utility can slurry the spent resin for temporary storage on-site in the solid radioactive waste storage facility or packaging for off-site shipment.

11.3.4 Spent Filter Cartridges

Spent filter cartridges originate from the following nine different systems: the heat transport purification, moderator purification, irradiated fuel bay cooling and purification, heat transport pump seal, D_2O cleanup system, fuelling machine water supply, spent fuel transfer process system, active drainage, and radioactive liquid waste management systems. The radioactivity is caused mainly by active particles collected in filter elements.

The shielded flasks will be used for on-site transportation of spent-filter cartridges. Each filter flask has its own hoisting and winch, thus permitting raising and lowering of the cartridge assemblies both at the filter housing location and at the MB. Before transportation the filter will be drained, and moved to the MB on dollies, which form a part of the filter handling equipment.

The flask is moved to the MB, in which the filter cartridge is stored in a storage drum. The drums are stored within portable shield casks in the MB. The storage drums of the filter cartridges could then be stored for temporary storage at the MB and then shipped off-site. Alternatively, the spent filter cartridges can be stored in cylindrical concrete holes on the solid radioactive waste facility.

11.3.5 Non-Combustible and Combustible Wastes

11.3.5.1 Waste Characteristics

Non-combustible and combustible wastes originate from the normal day-to-day reactor operations. They consist of cleaning materials, protective clothing, contaminated metal parts and miscellaneous items.

These maintenance wastes originate from general activities around the station and they may also include a small volume, approximately 1 m^3/a, of solidified liquid wastes.

11.3.5.2 Handling and Storage

Ensuring the separation of inactive rubbish from radioactive waste helps to keep the volume of radioactive waste significantly smaller than it would be if both types of refuse were disposed of together. Material handling procedure should include provisions to separate products from their packages before the product is used in a potentially contaminated area.

Plastic bags will be used as a container for the collection of compactable and non-compactable, which are provided at several locations on the boundary between the active and inactive zones. The plastic bags should preferably be transparent to enable the contents to be visually inspected. These bags are subsequently sealed and checked externally for radioactivity level with a beta-gamma monitor at the sorting and segregation facilities located on the MB and shared between two units. The contamination criteria for determining the waste as inactive and thereby allowing it to be disposed of as ordinary, non-active solid wastes should be based on the local enforcement regulations.

Low-level active non-compactable wastes are either transported directly to the solid waste storage facility on-site in 200 L drums or stored for a short period of time at the maintenance building in 200 L drums before being sent off-site for final disposal.

Low-level compactable waste will be compressed with a compactor located at the MB with a reduction ratio factor for compaction of 4:1 and then either transported to the solid waste storage facility on-site in 200 L drums or stored for short period of time at the maintenance building in 200 L drums before being sent off-site for final disposal. The outside surface of each drum is surveyed and an appropriate label is attached to the drum.

All radioactive waste could be stored for ultimate disposable in a readily retrievable fashion in the solid radioactive waste storage facility on-site, the storage capacity of which is defined by the requirements of the utility.

11.3.6 Organic Fluids, Oil, Chemicals, etc.

The most likely sources of these wastes are from the decontamination area, lubricating oil from pumps, and organic solvents from the laboratories.

The lubricating oil from pumps and organic solvents from laboratories are stored in steel drums, because the volume of such wastes is relatively small. As shown in Table 11.3-1, the annual average for these wastes are about 1.5 m^3/a for ACR-700 and the radioactivity is low.

The drums are either transported to the solid radioactive waste storage facility on-site or stored for a short period of time at the MB before being sent off-site for final disposal. If the drums are stored in the solid radioactive waste storage facility then they can be placed individually in either concrete trenches or vertical holes. Further treatment and disposal may include incineration at an off-site waste management facility.

11.3.7 Solid Radioactive Waste Storage Facility

The solid radioactive waste storage structure facility is designed to store medium and all low level solid radioactive wastes generated by the integrated two-unit ACR-700.

The solid radioactive waste storage structure is sited on or in a material having good drainage characteristics so that the lowest points of the in-ground concrete storage cells are above the highest anticipated level of water.

The types of wastes to be stored in this solid radioactive storage structure include spent filter cartridges (medium and low levels), spent resin, other medium level radioactive wastes such as contaminated tools, piping, reactor components, etc., and low-level wastes generated in the plant.

11.3.8 Interim Fuel Storage Facility

The current CANDU practise on dry storage of spent fuel is described in References 11-1 and 11-2. An interim dry-storage facility for spent fuel can be built by the utility, as appropriate.

Table 11.3-1
Average Annual Quantities of Solid Radioactive Waste Produced for One ACR-700 Unit

Category of Waste	Volume(1) (m^3/a)	Estimated Activity TBq/a
Spent Resin(2)	6	17
Low level combustible/processable wastes	17(3)	1.8×10^{-2}
Low level non-combustible/non-processable wastes	6	3.0×10^{-3}
Filters	2	1.85
Other Wastes	1.5	<0.30

Notes:

(1) The above quantities are based on solid radioactive waste produced at four CANDU 6 plants over a 14-year period (Point Lepreau, Gentilly-2, Wolsong-1, and Embalse). It is realised that each CANDU 6 plant is individual and that actual operating experience may lead to changes in operating procedures, thus both the volume and radioactivity content of the wastes will vary amongst plants. As the design of the ACR plant is similar to the CANDU 6 plants, the solid radioactive wastes should be similar to or lower than the quantities noted above.

(2) This quantity applies to the time at which the resins are discharged to the in-station spent resin tanks.

(3) This volume assumes compaction and/or processing of the waste prior to storage.

11.4 Liquid Radioactive Waste Management System

A common liquid radioactive waste management system is provided for the two units.

The primary function of the liquid waste management system is to collect radioactive or potentially radioactive liquid wastes generated during normal plant operation, including anticipated operational occurrences; to process the liquid waste in order to remove radioactive isotopes; to hold up the liquid wastes for radioactive decay or delayed processing and to discharge the treated liquids to the environment via the raw service water discharge line.

Equipment is provided to receive all active liquid wastes; to provide for the storage, sampling, and any necessary decontamination of the wastes; and to disperse the liquids into the plant raw service water discharge line. This dispersal is done under controlled conditions so that regulatory discharge limits are not exceeded.

The following sources are recognized as liquid wastes:

a) Low activity wastes (less than 3.7×10^{-7} GBq/L) – These wastes originate in areas such as the non-active laboratories and the SB floor drains.

b) Detergent wastes (less than 3.7×10^{-7} GBq/L) - The main waste originates from showers.

c) Active wastes (more than 3.7×10^{-7} GBq/L but less than 3.7×10^{-5} GBq/L) – These wastes originate in areas such as the active laboratories, RAB floor drains in active area, the decontamination centre and the rubber goods laundry.

d) Special sources – RB drains, heavy water areas, resin storage area, spent fuel bay, spent fuel underdrainage ground water sump, and reactor auxiliary building underdrainage ground water sump.

The active drainage systems provide for delivery of low activity, detergent wastes and active wastes at a sufficient head to flow into the liquid waste tanks.

By design, waste from sources a) and b) ,and c) normally enter one of the three separate sets of tanks. Waste from the special sources d) will normally be treated as active waste but, if necessary, may be decontaminated directly before being delivered to a high activity tank.

The “special sources” are treated as follows:

a) Liquid wastes from the areas within the reactor building are collected by the reactor building active drainage system and transferred to the low active sump for low-activity waste (if the gross β-γ activity is less than 370 Bq/L and D_2O content is less than 2%), or to the active drainage tank for active waste (if these levels are higher). This choice is made based on sampling.

b) Drainage from spent resin tanks is collected in the emergency sump in the reactor auxiliary building basement. The collected wastes are then discharged to the radioactive liquid waste management system tanks by pump.

c) The drainage from spent fuel bays is considered active waste (i.e., the design considers specific activity possibly exceeding 370 Bq/L). The drain lines are connected to an associated sump, which then pumps to the active waste tanks.

d) The underdrainage from spent fuel bays is collected in the spent fuel bay sump. The collected waste is discharged to the low activity tanks in the radioactive waste management system, as this activity will not exceed 370 Bq/L.

11.4.1 Design Bases

a) To receive all radioactive liquid wastes,

b) To provide storage for these wastes,

c) To provide sampling for these wastes,

d) To provide the necessary decontamination of these wastes,

e) To provide controlled dispersal of these wastes into the raw service water discharge line, and

f) To prevent radioactive discharges from the station from exceeding the allowable limits.

g) To prevent any leakage or spillage of radioactive liquid during a seismic event, the concrete storage tanks and the attached piping up to and including the first normally-closed valve are seismically qualified to DBE Category “A”.

h) To provide adequate shielding by the walls of the concrete storage tanks, and by the shielding enclosure for the ion exchanger and filter units.

11.4.2 Design Description

The liquid radioactive waste system consists of concrete storage tanks. Each tank is equipped with a recirculation/discharge pump. One set of tanks is used primarily for active wastes; one set is used for low activity wastes and one set is used for detergent wastes. Double isolation of active, low active and detergent waste tanks is provided to prevent cross contamination. Manifolding of the pump discharge lines allows the transfer of the contents of any one tank into any other tank; the contents of any tank can be dispersed into the raw service water discharge line. All valves, controls, and instruments to which access may be required during normal operation are located in accessible areas.

The major components of the system include the liquid waste tanks, the ion exchangers and filter units of the decontamination facility, pumps, and piping.

Decontamination of the effluent is not normally required, but a filter and two ion exchangers with auxiliary equipment and pump(s) are provided for decontamination should this be necessary due to unforeseen or abnormal conditions.

The system is contained in one area of the building basement so that failure of any equipment does not result in escape of liquid to the environment. The individual active and low activity tanks are arranged to overflow into the adjacent tank, until all tanks are full, before overflowing

to the floor drain system. Each of the recirculating pumps runs continuously from the time a tank starts receiving effluent until it is emptied.

The radioactivity in any tank of liquid wastes is normally checked three times as it is processed through the system. Each tank is sampled and evaluated before dispersal. During dispersal the flow passes through the liquid effluent monitor and the flow is stopped if it is suspected that the concentration of radioactive material being released is too high. Finally, a continuous sample of the raw service water is taken from the raw service water discharge line for routine analysis. This procedure provides a check on the waste management operations and also demonstrates compliance with regulatory limits.

When a tank is approximately half full, it is taken off the line for immediate processing and replaced with another tank.

When a tank is receiving waste, the pump should be on and recirculating the tank contents. This allows the thorough mixing of the contents for sampling as soon as the tank is taken off the line. The pump should remain running until it shuts off automatically on low tank level, when the tank contents have been dispersed.

A tank is sampled to determine if the contents can be dispersed directly, or require processing, i.e., decontamination (see Section 11.4.3). A bulk sample is taken from the pump discharge. The sample is then sent to the laboratory and the system remains 'as is' until the laboratory report is received.

When the effluent is cleared for discharge, it passes through the liquid effluent monitor. This monitor has two set points: one is a total activity set point for the most restrictive isotope; the other is concentration set point to be determined by the station management.

If, for any reason, the monitor detects activity in excess of the set points, the isolating valve closes and the event will annunciate locally and in the control room. Since the pump is recycling, no immediate problem exists and the active waste may be returned to another of the active waste tanks.

There is also continuous sampling of the water from the raw service water discharge line. This sampling system has two pumps. One pump extracts a relatively large flow of water from the discharge canal and passes it by a convenient sampling connection where the second pump extracts a constant sample flow and discharges it into the sample tank. The second pump is set to provide a sample over a seven-day period. It is essential for both pumps to run continuously.

In the unusual event that one of the "active" tanks is unavailable to receive wastes (abnormal operation), either due to processing failure or due to maintenance, the other "active" tank should be available to receive the waste. When the tank approaches the high level point, the contents must be sampled; if the activity is acceptable then the tank contents are to be transferred to one of the low activity tanks for recirculation and pumpout. A tank receiving liquid must not be pumped out to the raw service water (RSW) discharge line at the same time.

It is considered unlikely that any of the active liquids will have high concentrations of radioactive materials. Operating experience has shown that cleanup of the liquid waste tanks is infrequent.

Instrumentation and control for the radioactive liquid waste management system provides display of process variables and controls for selective automatic or manual operation of the system. A field annunciator unit is provided on a control panel in the main control room. An alarm annunciation including CRT display and printout is initiated in the main control room if the liquid waste effluent radioactivity level is exceeded, or if the associated monitor has malfunctioned.

11.4.3 Liquid Waste Decontamination Facility

The liquid waste decontamination facility is a sub-system of the liquid radioactive waste management system. The liquid radioactive waste is normally a combination of particulate, colloidal, and ionic material in water. A decontamination facility comprising a filter, which uses disposable cartridge elements and two ion exchange columns, is provided to process large quantities of aqueous radioactive effluents prior to discharge, if this is necessary. Only those wastes having a radioactivity in excess of 370 Bq/L should be processed in this facility.

When an active liquid waste storage tank needs processing, the tank is connected in to the decontamination facility by manipulating the appropriate valves. The tank contents are circulated by a pump, through the filter and ion exchange column of this facility, until the activity in the liquid remains constant. If the gross beta-gamma activity of the liquid is still greater than that concentration for which the annual average release limits will be exceeded in the raw service water discharge line, then the contents are re-processed until the activity has been sufficiently reduced to permit dispersal via the RSW discharge line.

Note that in addition to the gross beta-gamma activity, the tritium activity is also measured. The tritium activity must be below the concentration limit for tritium, so that the annual average release limits for tritium will not be exceeded in the CCW outfall. The service water is used for reducing the tritium activity in the liquid, should that be necessary.

During discharge, the water is sampled via the liquid effluent monitor, which has two set points: one is a total activity set point based on the discharge limit for the most restrictive radionuclide in the gross beta-gamma category and the other is a concentration set point to be determined by the station.

11.5 Gaseous Radioactive Waste Management

Potentially active airborne discharges come from the following areas:

- Reactor building
- Spent fuel storage bay area (and spent fuel reception bays)
- Decontamination centre
- D_2O handling area
- Active ventilation exhausts (e.g. from solid and liquid waste management, chemical lab, etc.)

All active or potentially active gases, vapours or airborne particulates that occur in the station are monitored, and filtered if necessary, prior to release to the atmosphere. In particular, active gases, which have been vented from the primary system, are released to the active ventilation system only after holdup to permit decay of short half-life isotopes.

The gaseous waste control of a ACR-700 involves:

a) Moderator enclosure driers for removal of tritiated heavy water,

b) Filters for particulates and radioiodine removal, and

c) Off-Gas management system to limit the release of radioactive noble gases from the station.

The effluent is discharged through a ventilation exhaust duct or stack. Stack effluent monitors are used to ensure that the release limits are not exceeded.

11.5.1 Gaseous Waste Control

11.5.1.1 Filters

The reactor building and potentially contaminated areas of the reactor auxiliary building (including the spent fuel bay exhaust systems and the off-gas management) are each equipped with a filter bank, which consists of a pre-filter, a high efficiency particulate (HEPA) filter, a charcoal filter and an additional HEPA filter. The contaminated air passes through these filters before being discharged via the common exhaust stack. Also a separate filtering unit exists for each of the long term cooling confinement volumes.

11.5.1.2 Vapour Recovery for the Reactor Building

The heavy water vapour recovery dryers for the moderator enclosure consist of dessicant dehumidifiers that remove the heavy water from the air and collect it on the dessicant. The dessicant is then regenerated and the heavy water with entrained radioactive materials is transferred to the heavy water cleanup system for cleanup. Upgrading eventually returns to the reactor heavy water systems. In this way at least 95 percent of the escaped heavy water and

tritium is returned to the reactor systems. The radioactive emissions of tritium are thereby reduced.

11.5.1.3 Off-Gas Management System

An off-gas management system is provided to treat active noble gases from specified sources. The gases are piped to the system. The off-gas management system achieves an activity reduction by delaying the noble gases in an adsorber and exhausting the resulting low activity gases to atmosphere.

The activated charcoal filter bed of the off-gas management system is designed to delay i.e., to give a transit time of about 28 days for ^{133}Xe thus reducing the activity of ^{133}Xe (5.3 days half-life) by a factor of 40. The remaining noble gases have shorter half-lives, namely, ^{135}Xe (9.2 hours), ^{87}Kr (78 minutes), ^{88}Kr (2.8 hours), ^{88}Rb, daughter of ^{88}Kr (17.8 minutes) are also delayed to varying degrees. On exiting from the charcoal bed, the gases are released via the central contaminated exhaust system, which is part of the reactor auxiliary building ventilation system.

Collected radioactive noble gases resulting from fuel element defects are treated by the off-gas management system to provide sufficient delay for decay of radioactive gases prior to release.

The off-gas management system treats off-gases from the PHT H_2O collection tank, the vent condenser and coolant storage tank of the pressure and inventory purge stream and the fuel handling stream. The H_2O collection and oressure and inventory control streams can be purged continuously if there is a continuous leakage of noble gases into the tanks. This off-gas stream is mostly air, Helium and H_2O vapour. Regular gas samples are taken to measure H_2 gas concentration in the process stream by laboratory analysis.

The low failure rate of ACR fuel and the short residence time of failed fuel in the reactor (i.e. through the use of the gaseous fission product system in conjunction with the failed fuel detection system) result in a general requirement to treat only one of the 12 off-gas streams at a time (i.e., Unit 1 bleed condenser from P&IC, vent from the H_2O storage tank, vent from PHT H_2O collection tank, vent from failed fuel hood A and C side, spent fuel magazine vent A and C side and vent from fuelling machine tank). The range of flow rates achievable with the off-gas management system equipment provides flexibility in dealing with single or combined streams, and with various isotopic distributions in the streams.

11.6 Effluent Radiological Monitoring

11.6.1 Liquid Effluent Monitoring System

The liquid effluent monitoring system should fulfil two objectives:

a) a control objective - it should alarm and terminate automatically for an unexpected release of a large amount of activity as a result of procedural or process failures.

b) a compliance objective - it should record continuously the amount of activity discharged from the station so that the utility can demonstrate that the releases are below control targets.

There is one liquid effluent monitor (LEM). It is comprised of one beta/gamma scintillation detector, electronics, chart recorder and liquid sampler. The LEM samples the liquid radioactive waste as it is being discharged from the thoroughly-mixed storage tank. It is designed to measure the gross beta gamma activity of the sample and deduce the overall concentration of radioactivity per unit volume of the effluent.

Note that the liquid releases normally occur on a batch basis. Thus the objective must be to control the releases so that there are no short term very high concentration of radioactivity leaving the plant. In general each utility identifies all the important radionuclides to be released in liquid from the plant to water. Note also that there is enough sensitivity to activate alarms and stop pump-out before control targets are reached. The adjustable (daily or monthly) setpoints are decided by the two sets of alarms, one for high activity and the other for excessive amounts of releases.

For liquid effluents, the monitoring point during discharge is the raw service water (RSW) discharge line. The liquid effluent monitor (LEM) continuously monitor any liquid waste as it is being discharged to the RSW discharge line, providing a permanent record of the concentration of radioactivity in the discharge as a function of time and providing the daily and monthly total activity released in liquid effluents. The typical measurement range for the LEM is about 1.4×10^{-5} GBq/m^3 to 1.4 GBq/m^3 in the energy window of 80 keV to 3.5 MeV. The LEM will automatically terminate the discharge if the concentration level or the total activity released in the liquid effluents being discharged, exceed pre-set limits. An automatic discharge termination will occur for any malfunction of the LEM. In each case, proper local and remote annunciation will alert the operator.

The LEM does not fall under the category of safety related systems. The LEM requires Class II power supply. The monitor is not seismically qualified. The monitor is also not qualified for harsh environmental conditions. The activity contained in the sample line of the LEM is low. A break or damage to the system components would not result in a hazard to the public or plant personnel in excess of allowable limits. This is an instrumentation system for monitoring effluents and therefore there will be no code class requirements.

11.6.2 Gaseous Effluent Monitoring System

11.6.2.1 Stack Monitoring System

The radioactivity content of the stack exhaust flow is monitored continuously by the gaseous effluent monitor (GEM). There is one GEM and it is located in the reactor auxiliary building. The system monitors not only noble gases, but also radioiodine vapours and particulates. It meets the control and compliance objective; consequently, the release rate of each type of activity and the total amounts released are recorded to compare releases against weekly control targets.

A stack monitoring system consists of:

a) An isokinetic sampling system

   The isokinetic sampler ensures that the sample to be monitored is truly representative of the effluent in the stack.

b) The gaseous effluent monitor (GEM)

   The GEM consists of a particulate monitor, a radioiodine monitor, a low and high range noble gas monitor. The monitor is equipped with six alarm lamps which indicate high radiation, high stack flow, high sample line flow, pump-power on, equipment-power on and processor-power on. The setpoints for these alarms will be evaluated by the utility. The different monitors are described as follows:

   1) Particulate Monitor

      Air passes through a particulate filter where a beta/gamma scintillation detector measures the beta activity in the collected dust. The detector is coupled to a photomultiplier tube, which in turn is connected to a linear amplifier and a digital ratemeter.

      The monitor ranges are appropriate up to emission target levels based on the assumption that all of the particulate activity is due to the most restrictive isotope. The filter is changed weekly and a detailed analysis of the particulate activity that was released, is evaluated independently.

   2) Radioiodine Monitor

      The air is passed through an activated charcoal cartridge where the radioiodines are collected and their activity levels are detected by a gamma scintillation detector, which includes a thalium activated sodium iodine crystal. The detector counts the 0.364 MeV gammas emitted by I-131 and its output is sent to a digital ratemeter. After background count subtraction, the measure of the accumulated I-131 activity under the iodine peak is determined. The monitor ranges are appropriate up to emission target levels.

   3) Noble Gas Monitor

      This monitor consists of a NaI scintillation detector (energy compensated) for which the count rate is proportional to both activity and energy. The important quantity is the product of the activity and the gamma energy of the gas mixture; namely, Bq.MeV.

Thus, the gross gamma component of the noble gases emitted is measured by the noble gas monitor.

The monitor measures rate of release, therefore the integrated releases are evaluated by a microprocessor and digitally displayed. The monitor ranges are appropriate up to emission target levels. The optimum ranges will be evaluated by the utility. Alarm setpoints including false alarms due to equipment malfunctions are usually set by the utility.

For gaseous effluents, the monitoring point during discharge is the main stack. The gaseous effluent monitor (GEM) is used to measure particulates, iodine and noble gas activity in the air being discharged via the stack. The activities are continuously measured and recorded by the station computers, which initiate alarms for any high instantaneous release and high 24-hour total release. The monitors are designed to initiate fail-safe alarms for such conditions as loss of power, equipment malfunction and air flow disturbance. The typical measurement ranges are 1.0×10^{-2} to 1.0×10^{5} Bq/m^3 for particulates, 1.0×10^{-3} to 1.0×10^{4} Bq/m^3 for iodine and 1.0×10^{3} to 1.0×10^{10} Bq.MeV/m^3 for noble gases. The GEM will alarm when permissible release levels are exceeded and provide a sample collection for tritium.

The GEM does not belong to the safety related system. The system is not seismically qualified nor to be qualified for harsh environmental conditions. The monitor will be powered by Class II power supply. There is no code classification requirements; i.e., same as that for the LEM.

11.6.2.2 Tritium Monitoring

In CANDU plants there is a provision for sampling of tritium released from the stack. An air sample from the stack is passed through a dessicant or a bubbler, which collects water vapour. The dessicant or bubbler is changed weekly and analyzed in the laboratory to find the amount of tritium, which is released from the stack. A typical system may consist of two calcium sulphate cartridge assemblies that are annealed to a separate vacuum system. The design allows selection of an on-line cartridge via the 3-way valves, and allows the removal of the off-line cartridge by disconnecting the quick connectors. The system has its own vacuum pump.

11.6.2.3 Carbon-14 Monitoring

The carbon-14 sampler is a stack sampling system and is connected to stack sampling line that provides continuous flow to the gaseous effluent monitor (GEM). Within the carbon-14 sampler, the sampling gas is split into two separate sampling trains. In one of the sampling lines, the gas flow goes through a pair of wash bottles filled with sodium hydroxide solution that collects the carbon-14 present as CO_2. The other sampling line collects the total carbon-14 content in a similar manner, but the sampling gas goes through a catalytic converter to ensure that any carbon-14 present as carbon monoxide or organics, is converted to carbon dioxide. The exhaust from the catalytic converter is passed through a second wash bottle, and the sample gas is then returned to the stack via an exhaust line.

The sampling is continuous and the samples are changed once per week, and the carbon-14 is measured in the laboratory by the liquid scintillation system.

11.6.3 Containment Monitoring

A separate triplicated gross-gamma monitoring system monitors the duct activity at a point between the tritium monitors and the reactor building exhaust duct dampers. A high activity measurement at any two of the three instruments will close the dampers to prevent release of activity to the atmosphere in the event of an accident. This monitoring system is an integral part of the containment system. The containment isolation system logic and operation are described in Section 7.2.4.3.2.

11.7 Environmental Monitoring

To evaluate the radiation impact to the environment caused by nuclear power plant operation, an environmental monitoring program should be established and conducted by the owner as per local regulations.

11.8 References

11-1 "Advances in Spent Fuel Dry Storage Technology for CANDU Reactors," IAEA Technical Committee Meeting on Advances in Heavy Water Reactors in Toronto, Canada (June 7-10, 1993).

11-2 "Future Considerations for Storage of CANDU Fuel," CNA/CNS Conference, Saint John, N.B., Canada (June 7-10, 1992).

TABLE OF CONTENTS

SECTION **PAGE**

12. RADIATION PROTECTION 12-1

12.1 Objectives 12-1
12.2 Design Control Program for Radiation Exposure 12-2
12.2.1 ALARA Application in Design Process 12-2
12.2.2 Methodology for Radiation Exposure Control 12-2
12.2.3 Dose Rate Statistics 12-2
12.3 Radiation Sources 12-4
12.3.1 Heat Transport System 12-4
12.3.2 Moderator System 12-5
12.3.3 Moderator Cover Gas System 12-5
12.3.4 Fuel Handling System 12-5
12.3.5 Spent Fuel Bay Systems 12-5
12.3.6 Shield Cooling System 12-6
12.3.7 Annulus Gas System 12-6
12.3.8 Off-Gas Management System 12-6
12.3.9 D_2O Clean-Up System 12-6
12.3.10 Spent Resin Storage Vaults 12-7
12.3.11 Radioactive Liquid Waste Management System 12-7
12.4 Radiation Protection Design Features 12-8
12.4.1 Equipment and Component Design Features 12-8
12.4.1.1 External Radiation 12-8
12.4.1.2 Internal Radiation 12-9
12.4.2 Facility Design Features 12-9
12.4.3 Shielding 12-10
12.4.3.1 Radiation Sources for Shield Design 12-11
12.4.3.2 Design Criteria 12-11
12.4.3.3 Shield Design 12-11
12.4.4 Layout 12-13
12.4.4.1 Access Control 12-13
12.4.4.2 Contamination Control - Zoning 12-13
12.4.5 Monitoring Equipment 12-14
12.4.5.1 Fixed Area Monitors 12-14
12.4.5.2 Plant Monitoring 12-15
12.4.5.3 Protection of the Public 12-16
12.4.6 Airborne Contamination Control 12-19
12.4.6.1 Internal Dose (Tritium) Control 12-19
12.4.6.2 Ventilation System 12-19
12.4.6.3 In-Plant Surveillance 12-20
12.5 Health Physics Program 12-22
12.6 Occupational Radiation Exposures 12-23
12.7 References 12-24

12. RADIATION PROTECTION

12.1 Objectives

The ACR-700 plant is designed to ensure that station staff and members of the public are provided with adequate protection from radiation throughout the operating life and into the de-commissioning phase of the plant. The principles used in developing the radiation protection features are based largely on past design. The emphasis is on advances in technology that lead to lower exposures, and design changes that reduce the hazards arising from the largest contributors to station exposures.

External and internal radiation exposures to persons at the site boundary and to plant personnel are limited by a combination of facilities incorporated into the station design and by adherence to a set of approved operating procedures and regulations. In general, the measures employed follow the principles used at existing CANDU plants.

Exposures to members of the population are limited by exclusion of all unauthorized persons from the station area and by preventing any habitation within the exclusion zone boundary. The release of all effluents, liquid and gaseous, that might conceivably carry significant radioactivity is monitored and controlled as detailed in Section 11. Active solids are stored in a manner that prevents the release of activity.

The exposure of station personnel to radiation is limited by control of access to areas of high activity or of possible contamination, and by plant layout and structural shielding arrangements. In addition, protective clothing, air masks, and decontamination facilities are available for use when required. Personnel monitoring and dosimetry facilities are provided.

The current Canadian limit of occupational exposures to a nuclear energy worker is 50 mSv in a one-year dosimetry period and 100 mSv in a five-year dosimetry period. This is consistent with the recommendations of the International Commission on Radiological Protection as set out in ICRP-60 (Reference 12-1). The statistics on occupational radiation exposures on operating CANDU 6 stations indicate that 20 mSv per annum (see Section 12.2.3) can be met as the occupational dose limit throughout plant life. The radiation protection provisions ensure safety for all normal, abnormal, and accident conditions. In addition, the as low as reasonably achievable (ALARA) principle is applied throughout the design and construction stages. That is, radiation exposures will be reduced to as low as reasonably achievable levels, economic and social factors being taken into account. The ACR-700 will achieve reductions in the total occupational exposure over those experienced on current CANDU stations.

It can be demonstrated that, on the basis of experience to date, the ACR-700 reactor design leads to individual dose equivalents below the ICRP Publication 60 guidelines for workers and for members of the public.

12.2 Design Control Program for Radiation Exposure

The primary purpose of the radiation protection program is to ensure that the units are operated with sound practice and that personnel exposure is maintained at levels as low as reasonably achievable. This objective is attained through plant design, an effective dosimetry program, staff training, administrative exposure control procedures, adequate work planning, and safe practices in all activities. Generally, radiation exposures can be minimized by taking advantage of radiation protection design features, taking into account past practices and exercising ALARA.

An effective dosimetry program, staff training, administrative exposure control procedures, adequate work planning, and safe practices in all activities are the building blocks for a sound radiation protection program.

12.2.1 ALARA Application in Design Process

The ALARA principle is applied at the design stage to ensure radiation exposures are as low as reasonably achievable, economic and social factors being taken into account. The aim has been to reduce individual and group total radiation exposures to ALARA levels in line with the regulating requirements and operating economics.

12.2.2 Methodology for Radiation Exposure Control

Since the ACR-700 exploits the operating experience of CANDU 6 plants, the radiation exposures at the operating plants are a good indication of the future exposures at ACR-700. Therefore, the radiation exposure control program takes an approach that consists of:

a) reviewing operating experience of CANDU 6 plants;

b) identifying design improvements, if any; and

c) identifying changes to operational procedures to the extent possible, which would reduce exposure.

The objective is to demonstrate either that the existing design and operational practices meet ALARA standards and, therefore, no changes should be made at the design stage, or to specify/recommend improvements, if necessary.

12.2.3 Dose Rate Statistics

Table 12.2-1 shows the total station exposures, broken down into external and internal (tritium) components since in-service for CANDU 6 stations, i.e., Point Lepreau, Gentilly-2, and Wolsong-1. The lifetime averages for these units are quoted in that table along with the capacity factors that they achieved. The expected exposures in the ACR-700 plant would be better because of design improvements.

For all CANDU 6 stations, radiation worker doses have generally remained well below the 50 mSv/a allowable dose for a single year, and worker doses averaged over 5 years are within the 20 mSv/a average over 5 years as per ICRP-60.

Table 12.2-1
CANDU 6 Internal and External Collective Dose Trends and Capacity Factors

Plant	Capacity Factor %	Internal Dose		External Dose		Total Dose Person-Sv
		Person-Sv	%	Person-Sv	%	
Point Lepreau (1983-1999)	85	0.26	24	0.81	76	1.07
Gentilly-2 (1984-1999)	80	0.23	18	1.04	82	1.27
Wolsong-1 (1983-1996)	85	0.46	34	0.88	66	1.34

12.3 Radiation Sources

This section describes the radiation sources that are considered for shielding, access control, monitoring equipment, and the ventilation system.

The one- and two-dimensional discrete ordinates transport codes listed in References 12-2 and 12-3 are used for designing the primary shields. The source terms were obtained from the bundle power distribution during steady state operations at full power from reactor physics calculations.

Based on these bundle powers, the fission density distributions in axial and radial directions were incorporated into these programs. The fission densities were multiplied by the fission neutron spectrum and fission product decay gamma spectra to generate multigroup neutron-gamma source distributions in one-dimensional cylindrical or slab and two dimensional cylindrical geometry calculations.

The codes produce neutron-capture gamma in fuel, and neutron-capture gamma in the calandria and other structural materials. The activation gamma source in shield structure, and fission product decay gamma source in-core, are also calculated for the shielding assessment after shutdown. The source terms are described in the following sections for the other shield types, i.e., the secondary shields, the auxiliary shields, and special shields. The sources of radioactivity in the process systems are discussed in the following sub-sections.

12.3.1 Heat Transport System

The heat transport system is a major source of radioactive material as it contains the fuel. The heat transport system contains fission products from any defective fuel, and activated corrosion products.

Historically, a small percentage of the CANDU fuel bundles (less than 0.1 percent) have developed failures in the fuel element sheathing. These defects result in the escape of a fraction of the inventory of the fission products from the defected element in the bundle. The escaped fission products enter the coolant and distribute via the coolant circulation to the surfaces of the piping of the transport system, to the purification loop, or they remain in solution. The escaped fission products also decay within the boundaries of the heat transport system. The main fission products found in the heat transport system are the noble gases, ^{95}Zr, ^{95}Nb, iodines, ^{137}Cs, ^{140}Ba, ^{140}La, and ^{94}Mo.

Metals in contact with the coolant in the heat transport system corrode very slowly. The corrosion products will pass through the neutron flux in the core of the reactor. Some of these corrosion products become radioactive and may deposit on out–of–core surfaces to produce radiation fields outside the reactor, or they may escape from the system to become a secondary source of radioactive material outside the system boundary. The main activation products are ^{59}Fe and ^{60}Co.

Small quantities of the coolant or impurities in the coolant become radioactive. The main coolant activation products are ^{16}N, ^{19}O, ^{18}F, ^{3}H, and ^{14}C.

12.3.2 Moderator System

The moderator contains heavy water activation products and activated corrosion products. The main activation products are ^{16}N, ^{19}O, ^{17}F, ^{41}Ar, ^{51}Cr, ^{56}Mn, ^{59}Fe, ^{60}Co, ^{3}H, and ^{14}C.

The moderator yields almost all of the ^{14}C produced in a CANDU reactor. The ^{14}C reacts to form chemical species, which are removed by the ion-exchange resins. In this way about 98% of the ^{14}C is contained. The moderator cover gas releases small quantities of carbon-14.

Most of the tritium production occurs in the moderator. However, with leak-tight moderator system construction, low operating temperature and pressure, and appropriate collection of leakage, there is little escape into the reactor building.

The radiation source terms for shield design are the induced activities and corrosion product activities. Photoneutron sources are also taken into account. Concrete shielding between accessible areas and pieces of equipment ensures that photoneutron levels become insignificant.

Note that the ion exchange resin activity levels are calculated using corrosion products circulating in the moderator D_2O and taking into account purification system operating conditions, e.g., purification flow, resin change time, resin volume, etc. Filter shielding is based on radioactivity collected on the filter, mainly from the ^{60}Co activity.

12.3.3 Moderator Cover Gas System

The major activity in the system is ^{41}Ar, which is produced from activation of ^{40}Ar in the helium gas. Argon-41 has a half-life of 1.83 h. Although D_2O vapour contains other induced activities, namely ^{16}N, ^{19}O and ^{17}F, they do not contribute to dose rates, since their concentrations and specific activities are not significant. Argon-41 dictates shielding requirements.

12.3.4 Fuel Handling System

The fuelling operation is carried out on power. While designing shields, any contributions to dose rates from the fuelling machine loaded with spent fuel were taken into consideration. Irradiated fuel bundles will experience from about several minutes up to one-hour decay during fuel transfer operations.

12.3.5 Spent Fuel Bay Systems

The active fission products that may be present in the spent-fuel transfer and storage bays are removed by a purification system, which is also a cooling system. No significant activity is expected in the storage bays water, but the purification system can be used to clean it if necessary.

Past experience from CANDU reactors indicates that there is no significant accumulation of radioactive materials in the pumps or heat exchangers of this system.

The water shielding over the spent-fuel baskets that are stacked in storage frames reduces dose rate over the water surface to less than 5 μSv/h.

12.3.6 Shield Cooling System

This system that contains a purification circuit that removes corrosion products, impurities and the chemicals that the water may contain. The neutron flux in the calandria vault and the end shields activates the water and corrosion products. The sources of radiation in the shield cooling system are as follows:

a) Induced Radioactivity: due to neutron activation of the oxygen in the water, the main radioisotopes are ^{16}N and ^{19}O.

b) Activated Corrosion Products: the circulating water corrodes the surfaces of the components of the system, and the transported corrosion products are activated in the neutron flux within the end shields and calandria vault.

c) Activated Impurities: although the water that enters the circuit is previously demineralized, it can contain some impurities, which activate in the shields; also ^{41}Ar from the activation of ^{40}Ar, present in air dissolved in the water, can be found.

12.3.7 Annulus Gas System

The annulus gas acts as a thermal barrier between the pressure tubes and the calandria tubes. The annuli are filled with carbon dioxide gas selected for its radiochemistry and low argon impurity level. The CO_2 gas is circulated at low pressure through the annulus between the pressure tubes and the calandria tubes. The CO_2 contains low impurity ^{40}Ar (about 5 ppm). The radiation dose rates around pieces of equipment in the annulus gas system are due to ^{41}Ar.

Note that ^{14}C is also produced in this system, but in negligible quantities. It has a half-life of 5,760 years and emits betas (not gammas) with an average energy of 0.05 MeV; i.e., there is no conflict with shielding requirements.

12.3.8 Off-Gas Management System

The off-gas management system is designed to reduce the active noble gas release to the environment. The noble gases collected in the components of the pressure and inventory control system are the main source. The system also treats off-gases from the on-power fuel handling system.

12.3.9 D_2O Clean-Up System

The main radioactive components of this system are feed tanks (downgraded D_2O storage tanks), feed drums that contain moderator D_2O to be cleaned, an ion exchanger that removes most of the

soluble activated impurities in the water, other ion exchangers that remove most of the organic matter and the remaining impurities, and the charcoal filter that removes oil by adsorption and retains most of the particulate matter. The major activity on the filter is mainly due to ^{60}Co.

12.3.10 Spent Resin Storage Vaults

Spent resin from ion exchangers in the systems of the stations is stored in steel-lined concrete tanks. These systems are listed below:

a) The spent fuel bay cooling and purification system,

b) The shield cooling system,

c) The moderator D_2O clean-up system,

d) The radioactive liquid waste management system,

e) The heat transport purification system, and

f) The moderator purification system.

Only long-lived isotopes present in significant amounts in the resins are considered in shielding calculations, i.e., ^{60}Co, ^{134}Cs and ^{137}Cs.

12.3.11 Radioactive Liquid Waste Management System

The main components of this system are concrete storage tanks located in the reactor auxiliary building. A filter, ion exchangers, and the associated pump and piping comprise the decontamination facility.

12.4 Radiation Protection Design Features

The radiation protection design features ensure that inadvertent exposure of radiation to plant personnel or members of the public are avoided. For this reason, the design features consist of the following:

- A system of access control to prevent any acute exposure from internal or external hazards,
- A system of contamination control to limit any chronic exposure from internal hazards,
- A radiation shield system to limit any chronic exposure from external hazards,
- A system of radiation monitoring, and
- A radioactive waste management system (see Section 11).

The shielding aspects of the radiation protection were designed to satisfy various dose rate criteria given in Section 12.4.3.2. The philosophy was to segregate the plant into accessible, restricted areas and inaccessible areas. Maintenance, inspection and testing were considered in shielding design taking into account duration and frequency.

Other features introduced throughout the design process were as follows:

a) Equipment reliability - The environmental qualification of equipment exposed to radiation is considered throughout the design to ensure maximum component life.

b) Material selection - Low cobalt steel will be used throughout the heat transport system, limits on cobalt content have been specified on components and equipment, and the use of high cobalt content materials will be minimized.

c) Chemistry control - A tight specification for the coolant and moderator chemistry were developed at the design stage to minimize corrosion.

12.4.1 Equipment and Component Design Features

The fundamental aim of radiation protection is to reduce exposures to the lowest practical level. Although general biological effects of ionizing radiation from external and internal sources are not much different, the precautions taken against one hazard are of little use in protecting against the other. Consequently, the radiation protection design features are somewhat different between the two sources of radiation.

12.4.1.1 External Radiation

Large equipment from various process systems (e.g., delay tanks, heat exchangers, steam generators, pressurizer) is shielded by ordinary concrete shielding from the accessible areas. These shields must reduce fields to acceptable levels; if the equipment is located in the steam generator room, for instance, the field from these sources must be reduced to much less than 250 µSv/h during reactor operation.

Shielding of filters is usually made of lead material at the top and concrete housing all around. Special filter flasks are made for flasking of these filters for removal.

Resin slurry lines and other piping are shielded appropriately. Wherever practicable, radioactive pipes are run through inaccessible areas during operation, shielded behind a wall, or inside trenches so that the radiation dose rate received from these pipes remains below acceptable levels in a given area. Field run piping is installed on an incline for drainage purposes.

Shielding of pumps is accomplished by separating the pump motor from the pump bowl with an intervening wall. Valves are located in valve galleries or behind shielded walls with holes for valve manipulation and shielding against nearby equipment.

12.4.1.2 Internal Radiation

Heavy water is used only in the moderator system, which is a low-pressure system. Nevertheless, it is inevitable that valves and mechanical joints will leak. At CANDU stations, D_2O leakage is minimized by using welded joints wherever possible and by limiting the number of components that have mechanical joints.

12.4.2 Facility Design Features

The primary shields attenuate nuclear radiation from the reactor core. The process systems are shielded by the secondary, auxiliary, or special shields. These are described in Section 12.4.3.

Contamination control features are explained below, and these are designed to address both surface contamination and airborne contamination. The contamination control design features consist of the following:

- Zoning,
- Rubber area,
- Change rooms,
- Ventilation systems and D_2O vapour recovery system,
- Protective clothing,
- Respirators,
- Decontamination.

These are summarized as follows:

a) Zoning of the facility is a means of controlling contamination at source. The zoning system comprises a zone that contains no radioactive equipment and is free from contamination, and a radiation/contamination control zone. The contamination control zone is defined as the areas where the dose due to radiation exposure, the radioactive material concentrations (excluding naturally contained radioactive materials) in the air or water, or the surface contaminated concentration by radioactive materials exceeds or is expected to exceed the

limits defined by the licensing authority. The sources of contamination are localized and under control in this zone. These zones are described in Section 12.4.4.2.

b) The rubber area is an extension of the zoning system. Its purpose is to localize an area of high contamination and to minimize spread of contamination. When a particular job is completed in this area, it is decontaminated and the rubber station equipment is removed. There is usually a rubber change area, which is a rubber area within a rubber area. Everyone in this area wears a white coat or coveralls because of the high probability of contamination.

c) The type of protective clothing worn in each of the three zones must be regulated, and facilities for clothing change and washing must be provided. The change room contains storage for personal and work clothing, and working and monitoring facilities.

d) The spread of contamination is further controlled by ventilation systems and by the heavy water vapour recovery systems, in addition to the controls described briefly above.

e) As a safeguard for workers, protective equipment stops contamination from spreading into clean areas and also protects those employees required to work in contaminated conditions. For normal work, routine clothing is worn. When handling loose radioactive materials, gloves are worn, and protective footwear is worn when working in areas which might become contaminated.

f) Suitable respiratory protection is worn to prevent inhalation of airborne contamination when critical levels of same are present. Particulate contamination is removed from the air by dust filters, but for iodine and tritium, the same filter is ineffective. Instead, a dust and charcoal filter is used, which has a particulate filter to remove airborne dusts and a charcoal filter to remove iodine. Full mask respirators are used in higher contamination areas because they provide a tight seal on the face and thereby offer better protection.

   For tritium, when the concentration and work condition is equal to or less than 250 μSv/h, the half-face type tritium respirator is usually worn.

   For tritium and radioactive gases, clean air is supplied for breathing as is done with the plastic suit when the concentration and work condition is higher than 250 μSv/h. A ventilation tent would be used if a piece of equipment were generating high local levels of airborne contamination.

g) When equipment such as pumps and valves become contaminated (a layer of radioactive debris attaches to their surface), they are decontaminated by using chemical or physical cleaning processes. Special techniques are also used for the decontamination of skin, clothing, and removable equipment and tools. A decontamination centre is provided in the service building for these activities.

12.4.3 Shielding

The following sections describe the radiation sources for shield design, the design criteria, and the categories of shielding used throughout the plant.

12.4.3.1 Radiation Sources for Shield Design

To enable station staff to work in the vicinity of an operating reactor, it is necessary to absorb the nuclear radiation in thick radiation shields surrounding the core and, consequently, to reduce the intensities of nuclear radiation to tolerable levels in the region outside the shield. Even for regions of the nuclear reactors where human access is only required at shutdown, it is necessary to reduce the radiation intensities to levels at which activation of the structural materials is low enough to permit personnel access at shutdown.

12.4.3.2 Design Criteria

The shielding design criteria for the ACR-700 are those used for existing CANDU 6 plants. These criteria recognize the following factors:

a) It is important for the utility to have flexibility in assigning duties to the operators,

b) The operators will receive part of their annual exposure through inhalation or skin absorption of tritium, and

c) The shield design, in conjunction with appropriate operational practices, ensures that the annual dose to an atomic radiation worker is less than 100 mSv/a over five years, which implies an average yearly dose of 20 mSv, and not exceeding 50 mSv in any one year.

The dose rates for which the shields are designed are as follows:

a) Non-nuclear energy workers:

   <0.5 μSv/h, at the work location.

b) Nuclear energy workers:

   <5 μSv/h average, in accessible areas;

   <250 μSv/h in restricted access areas during reactor operation;

   <250 μSv/h, twenty-four hours after shutdown in areas normally inaccessible during reactor operation, i.e., “shutdown areas”, where dose rates are dominated by deposited activity, i.e., the dominant radiation hazard is unshielded.

12.4.3.3 Shield Design

This section describes the categorization of shields used around the reactor, the heat transport and moderator systems, and auxiliary systems.

12.4.3.3.1 Primary Shields

The shields that protect personnel from reactor radiation are called primary shields. There are primary end shields, primary side shields, and a primary top shield (see Figures 12.4-1 and 12.4-2).

The end shields are horizontally oriented cylinders at each end of the reactor. They consist of four major components:

a) The calandria tubesheet,

b) Carbon steel balls and water region,

c) The fuelling machine tubesheet, and

d) Fuel channel penetrations with their structure and shield plugs.

The side primary shield system essentially consists of a light-water filled calandria vault and ordinary concrete. The water also serves as a thermal shield for the concrete. The shield consists of the following:

a) Water in the calandria vault, and

b) Vault concrete walls.

The top primary shield consists of two regions:

a) The water in the calandria vault, and

b) The reactivity mechanism deck, which consists of steel lower deck plate, concrete, steel upper deck plate, air region, and steel tread plates.

12.4.3.3.2 Secondary Shields

The secondary shielding is that shielding which is placed around the HT system components for radiation protection in normal operation. In addition to this function, the secondary shielding in some areas complements the primary shielding. Also, because of layout and operation of auxiliary systems, a single shield serves both as an auxiliary and as a secondary shield.

12.4.3.3.3 Auxiliary Shields

The auxiliary shields attenuate radiation from systems such as the moderator and the fuelling machine.

12.4.3.3.4 Special Shields

These shields include flasks, shielding doors, or any portable shields that may be used during maintenance/repair operations. The cable or piping penetrations through the reactor building wall are shielded by ilmenite sand, steel, or lead wool as applicable, provided that the containment wall equivalent shielding is maintained and that radiation dose from piping, etc. (if active) is reduced to acceptable levels.

There are essentially two sets of shield doors in the reactor building:

a) The vault doors, and

b) The fuelling machine (F/M) maintenance lock doors.

The vault doors are usually open during reactor operations. However, access to either fuelling machine maintenance lock is possible with the reactor at power once the vault door is closed and spent fuel has been discharged from the fuelling machine.

The fuelling machine maintenance lock door is closed during operation. If required, however, this door can be opened if the vault door is closed, to remove the fuelling machine from the maintenance lock.

12.4.4 Layout

The plant is laid out to provide the necessary segregation of radioactivity and other hazards from personnel and the population. The purpose of this section is to describe access control and zoning principles to reduce radiation dose to plant personnel.

12.4.4.1 Access Control

The access control system is provided to guard against unwitting approach by personnel to high radiation areas. The basic device in the system is a series of locks and keys. The keys are retained in and issued from a special keyboard(s) in the control room.

Regulation of personnel entry to the exclusion zone is set forth in the station procedures and is generally restricted to qualified personnel and to those under escort by them. Wherever possible, use is made of permanent signs and procedures to warn and instruct personnel of any possible danger from radiation. However, there are “Access Controlled Areas” where the radiation hazard is such that entrance must be made only with the knowledge and consent of the control room staff, and by using a special key. These areas are divided into three subsystems, A, B and C, depending on the factor conditioning their accessibility. Subsystem A is conditioned by reactor power level, subsystem B by fuelling machine location and subsystem C is not conditioned.

The reactor building contains most of the sources of radiation. It contains the reactor core, the calandria, the end shield components, the heat transport and moderator system components and most of their auxiliaries, the fuelling machine, etc. Certain areas, which are accessible in the reactor building under controlled conditions, can become inaccessible as the power level of the reactor is increased and when the fuelling machine is performing “on-power” refuelling operations.

All personnel access doors are equipped with devices to permit escape, irrespective of the status of access locks.

12.4.4.2 Contamination Control - Zoning

The buildings in the plant are laid out in a manner that assists in the necessary segregation of radioactivity and other hazards from plant personnel and from the population. The features described below form part of the plant arrangements for this purpose.

Contamination control has a primary purpose to protect personnel and the general public from the hazards associated with station production, and/or use of radioactive material. To prevent contamination spread, personnel traffic is controlled, and appropriate radiation detection instruments and monitors are used to ensure adequate radiation control. Based on current CANDU operating practice, the plant layout is divided into three zones according to the potential contamination in each. The zones are defined as follows:

Zone 1 - This zone contains no radioactive equipment and is free from contamination. No form of radioactivity is allowed to enter this zone.

Zone 2 - This zone is normally free of contamination and radioactive equipment. However, maintenance or the movement of radioactive material from Zone 3 can temporarily create contamination, which is cleaned up as soon as discovered or suitably controlled. This zone is intended as a buffer between the potentially contaminated Zone 3 areas and the clean Zone 1 area.

Zone 3 - This zone contains the principal sources of contamination, radioactive material, and equipment. The presence of contamination may sometimes be present, i.e., it should be expected. Sources of contamination are localized and kept under control.

However, the ACR design and layout permits the zoning system to be divided into a two-zone system. One zone, which would contain no radioactive equipment and is free from contamination and radioactive equipment, and a radioactive control zone that contains sources of radiation and contamination, where contamination may sometimes be present and where maintenance or movement of radioactive material may create contamination.

12.4.5 Monitoring Equipment

The radiation monitoring provides the information necessary to limit source production, to contain the radiation, to remove the radiation, and to measure radiation effects. There are two monitoring systems: one for protection of the plant personnel and the other dedicated to the protection of the public. The source terms for assessments of monitoring equipment are described below.

12.4.5.1 Fixed Area Monitors

The fixed area monitoring consists of fixed-area gamma monitors, tritium-in-air monitors and fixed contamination monitors. Alarms provide sufficient warning of radiation hazards so as to avoid large exposures. In accident cases, such alarms would be preceded by other indications of impending trouble.

Portable alarming systems are used at the station for various maintenance and inspection operations in high fields. These devices assist in minimizing exposures and preventing over-exposures.

12.4.5.1.1 Fixed-Area Gamma Monitors

Fixed area radiation monitors are permanently installed in areas of potentially dangerous radiation exposure to detect the occurrence of radiation hazards and to warn personnel of the presence of high fields. These area gamma monitors do not replace survey instruments, since they only give an indication of the general radiation level in the area as seen by the detector.

A typical monitoring loop consists of a pair of detector assemblies, a local radiation annunciator in the room being monitored, a field radiation indicator unit outside of the door of the room being monitored, a central unit and interface with the digital control computer, and access control. The local radiation annunciator contains a klaxon horn and a red light to indicate high radiation levels.

12.4.5.1.2 Tritium-in-Air Monitors

For detection of tritium in the atmosphere of the moderator rooms in the reactor building, both fixed and portable tritium monitors are provided.

12.4.5.1.3 Fixed Contamination Monitors

To prevent transport of radioisotopes other than airborne, fixed contamination monitors are provided in the services building and the reactor auxiliary building for detection of contamination. These are hand and foot frisker monitors, which are installed at zone interfaces in normal pathways. Before leaving the plant all personnel must pass through a portal monitor for a final check.

12.4.5.2 Plant Monitoring

12.4.5.2.1 Gaseous Fission Product Monitor

This system detects the presence of failed fuel in the reactor and checks the iodine-131 activity. Sample lines from the heat transport system are scanned for concentration of Xe-133, Kr-88, I-131, and Xe-135.

When compared to each other, Xe-133 and Kr-88 give an indication of “pinhole” fuel defects. Iodine-131 is measured and alarm signals are given when the level reaches a pre-determined value. Xenon-135 provides indication of iodine production when the iodine is being removed from the heat transport system by the purification system.

12.4.5.2.2 Failed Fuel Location Monitor

If an increase in iodine levels is detected by the gaseous fission product monitor, the fuel channel containing the defective fuel is identified by a failed-fuel location system The failed fuel bundle is then removed from the channel.

12.4.5.3 Protection of the Public

The public must be protected from excessive radioactive releases, which may occur during normal operation or due to accidents.

During normal operation, gases from the reactor building, the services building, etc., pass through filters and are exhausted via the stack. The gaseous effluent monitor (stack monitor) measures the gaseous effluent releases. The liquid effluent monitor is installed at the discharge of the liquid waste management system into the condenser cooling water duct. The following sections discuss the stack monitor, the liquid effluent monitor, and the containment isolation monitors.

12.4.5.3.1 Gaseous Effluent Monitor (Stack Monitor)

The radioactivity content of the stack exhaust flow is monitored continuously by the gaseous effluent monitor (GEM) (see Section 11.6.2). In addition to the GEM and a tritium sampler, a carbon-14 sampler is used to measure carbon-14 activity in the air exhausted via the stack.

12.4.5.3.2 Liquid Effluent Monitor

The liquid effluent monitor (LEM) monitors any liquid waste as it is being discharged to the raw service water discharge line, thus providing a record of the concentration of radioactivity in the discharge as a function of time, and providing, by integration with respect to flow and time, the daily and monthly total activity released. Also, the LEM will automatically terminate the effluent discharge if the concentration level or the total activity (daily or monthly) of the liquid effluent exceeds preset limits (see Section 11.6.1).

12.4.5.3.3 Containment Isolation Monitors

The containment isolation monitors are installed in the reactor building ventilation system exhaust duct, downstream of the isolation dampers. The reactor building ventilation system draws fresh air through the reactor building and exhausts it up the stack. Thus a release of activity to any part of the reactor-building atmosphere could lead to a release of activity via the stack.

These monitors detect the gamma radiation emitted by the air flowing through the duct. The setpoint at which dampers are closed, is based on the gamma dose rate received at the detectors from a mixture of noble gases or iodine-131 within a pre-determined energy window.

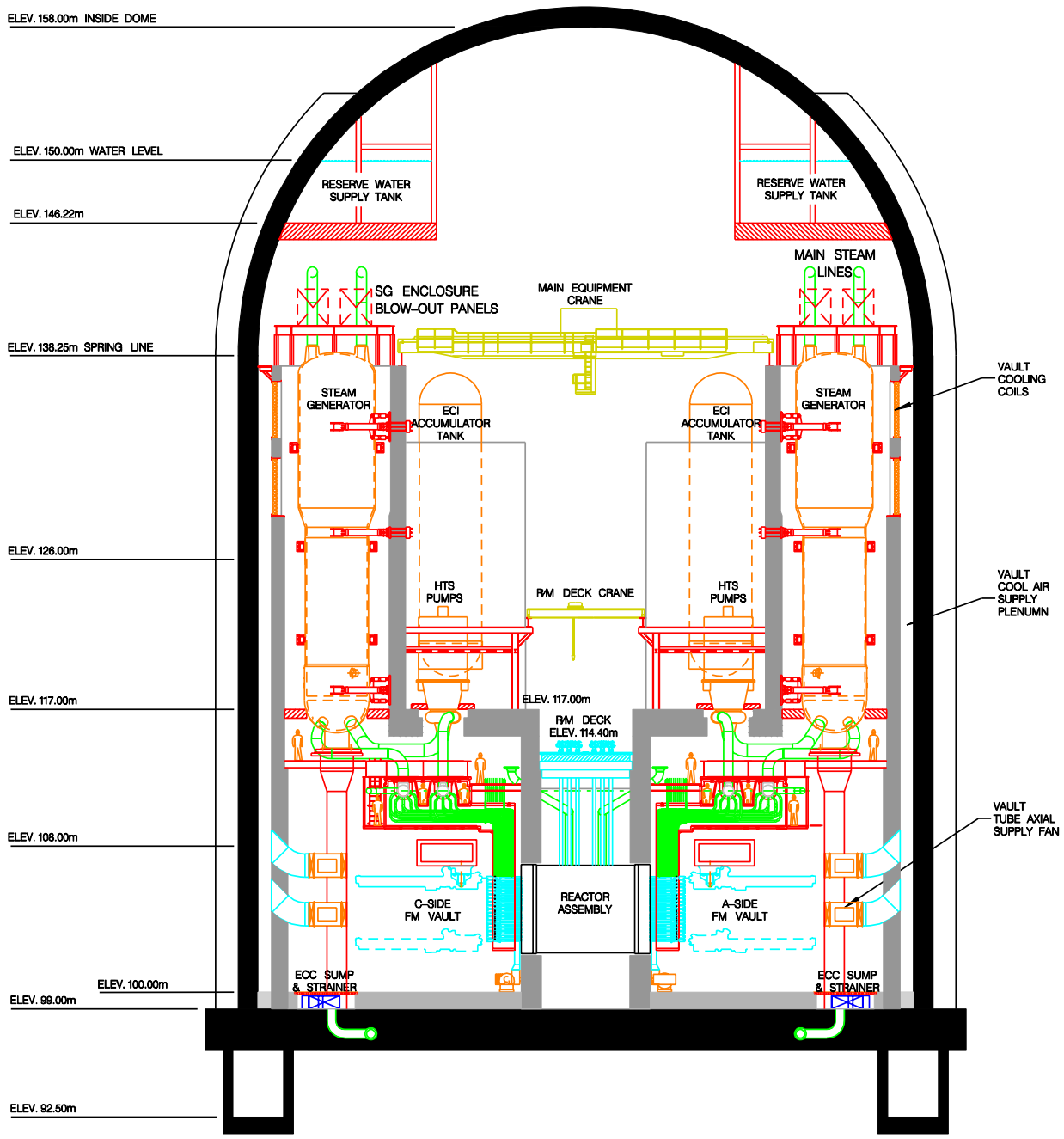

Figure 12.4-1 Reactor Building Section

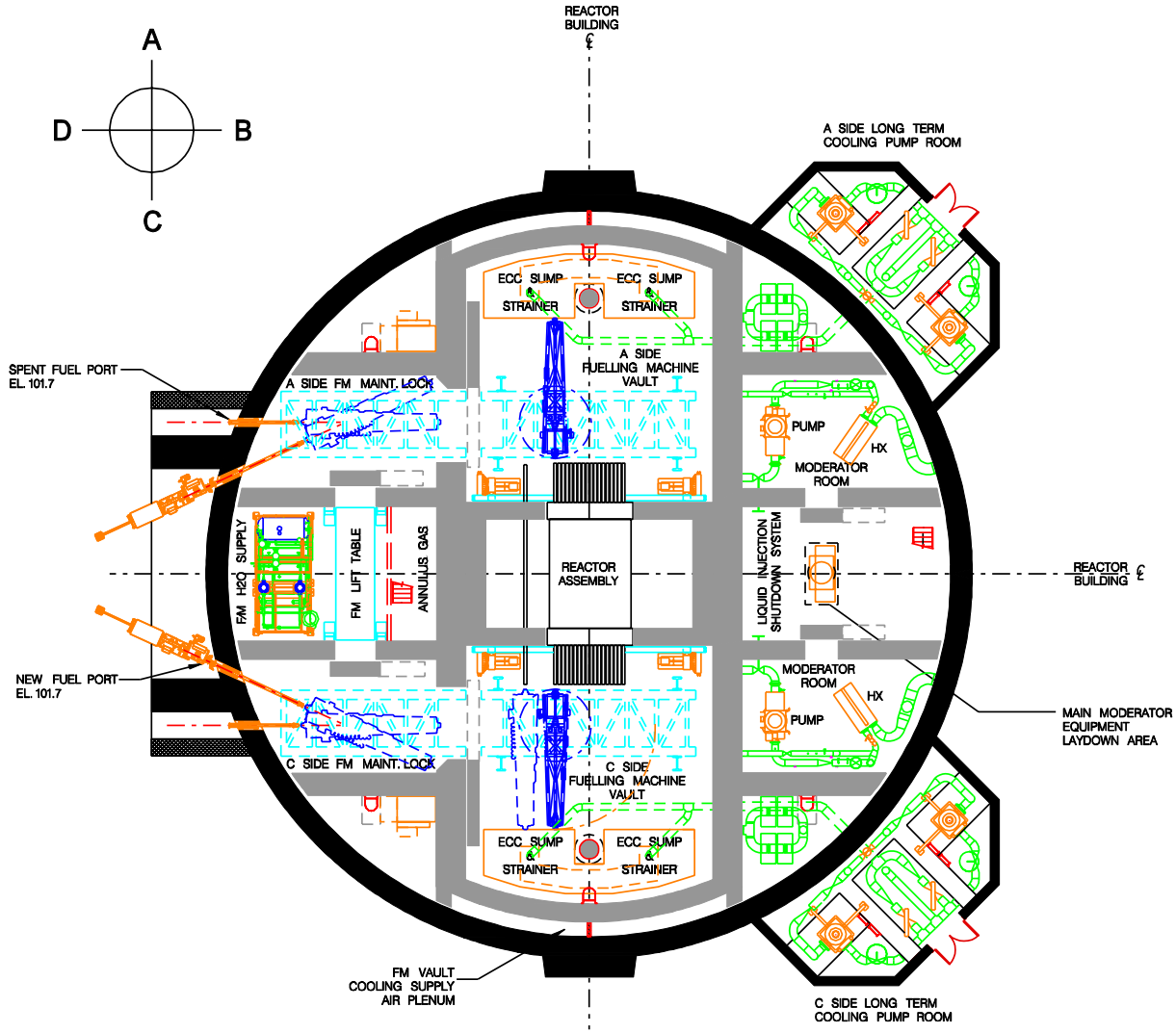

Figure 12.4-2 Reactor Building Plan

12.4.6 Airborne Contamination Control

The reactor building as well as the balance of the plant are laid out in such a manner as to assist in the necessary segregation of airborne radioactivity (and other hazards) from plant personnel and the environment.

Most of the airborne contamination sources (associated with the light and heavy water systems) are located within the reactor building. The airborne contamination control features in the reactor building prevent the escape of contamination. Inside the reactor building, a closed cycle vapour recovery system ensures that the consequences of any heavy water leakage from the moderator and its auxiliaries are minimized. A small bleed flow through the dryer/filter to the reactor building contaminated exhaust duct is usually the only pathway through which the contaminated air may leave the reactor building. The exhaust flow is monitored and filtered to maintain the acceptable emissions standards.

Within Zone 3, the spread of airborne contamination is minimized by confining the sources to specific rooms, and through the adjustment of ventilation flows. Ventilation arrangements are designed so that during a transfer of atmosphere between different areas, the air will flow from the potentially less to the potentially more contaminated area.

12.4.6.1 Internal Dose (Tritium) Control

Tritium control is inherently addressed by design, because of the basic requirement for conservation of expensive heavy water and reduction of tritium doses. Tritium control features are listed below:

- Leak tightness,
- D_2O vapour recovery,
- D_2O leakage collection,
- Confinement,
- Ventilation and dilution (purge).

The room boundaries are chosen so that systems known to be chronic tritium leakage sources are confined. Ventilation and D_2O vapour recovery systems are designed to maintain acceptable airborne tritium levels.

12.4.6.2 Ventilation System

The ventilation systems consist of air supply, non-contaminated exhaust, and contaminated or potentially contaminated exhaust air systems, which include filters, fans, dampers, ducts, and control instrumentation.

Generally, the ventilation systems are designed so that air flows from areas with lower levels of airborne contamination to those of higher contamination. There are two distinct ventilation

systems: the reactor building ventilation system, and the reactor auxiliary building and spent fuel bay ventilation systems.

For the reactor building, the airborne contamination control comprises accessible and inaccessible areas. A continuous purge flow of air is provided through the accessible areas. During normal operation, movement of personnel or equipment through doors or airlocks from one area to another may cause some reverse flows of air from more to less contaminated areas. The purge prevents accumulation of airborne contamination in the accessible areas.

In the inaccessible areas of the reactor building, the confinement of process leaks and spills expected in the course of routine and non-routine operations is considered to be the most effective and economical method to control airborne contamination.

Air filters provided with the reactor building ventilation system and the heavy water recovery system remove solid particulates that are suspended in the air exhausted from the active areas to the environment. The filter train consists of a pre-filter, a high efficiency particulate air (HEPA) filter, an activated charcoal filter, and a second HEPA filter.

The exhausts from the potentially contaminated areas are filtered prior to discharge via the stack. For instance, the ventilation exhausts from the reactor building and the spent fuel bays pass through their own filter banks, which consist of a prefilter, a HEPA filter, an activated charcoal filter, and another HEPA filter. The charcoal filter should have better than 99% efficiency for removing all forms of radioiodine that might be present in air, prior to discharge via the stack.

12.4.6.3 In-Plant Surveillance

The design provides for an in-plant program of monitoring and sampling of the air. The radiation monitoring provides the information necessary to limit source production, to contain radiation, to remove radiation, and to measure radiation effects. The in-plant monitoring system consists of the gaseous fission product monitor, the failed fuel location system , the fixed contamination monitors, the fixed tritium-in-air monitor and the fixed area gamma monitors (see Section 12.4.5).

In addition to the plant monitoring systems, the support services listed below are used in monitoring of radioactive substances, of the plant personnel and of contamination:

a) The chemical laboratory,

b) The health physics laboratory,

c) Portable monitors, and personnel monitors.

12.4.6.3.1 Post-LOCA Radiation Monitoring (Operator Safety)

Provisions for operator safety following a LOCA include monitors in specific areas to indicate the status of radiological safety and indications to the staff to evaluate or avoid specified areas.

The fixed area gamma monitors are used for normal operating conditions; however, they will also indicate the presence of high radiation levels in an area following an accident. Survey teams with portable instruments perform radiation surveys within and outside the plant following an accident. The site emergency procedures are followed under these conditions.

The radiation monitoring requirements for operator safety form part of the radiation protection program and are assessed in the post-LOCA reviews at site. These requirements include the following:

a) Timely warning of the event and indication of the need for evacuation, if required; and

b) Provision to monitor the radiological conditions inside the plant prior to and during any re-entry of personnel.

12.5 Health Physics Program

The plant manager controls the health physics program. The site health physics department manager has the basic responsibility for company policies and regulations for the protection of employees and the public from the effects of radioactivity from the station.

The health physics program is prepared at site during the commissioning phase, and this program comprises the following:

- Organization and administration for radiation control
- Training and qualification for radiation control
- External exposure control
- Internal exposure control
- Reduction of occupational exposures
- Contamination control
- Radioactive solid wastes management
- Radiation work control
- Improvements in radiation control tasks

The health physics department reviews periodically the effectiveness of the station radiation control program. They are also responsible for the maintenance of individual dose records, and they report radiological dose data to the licensing body.

The health physics department also has direct authority in procedures regarding personnel exposures in emergencies, the entry of personnel into areas of extreme activity, and the shipping of radioactive materials. In the latter case they are responsible for arranging permission from the licensing body.

The organization of the responsibilities and the organization of the health physics program are the responsibility of the plant owner.

12.6 Occupational Radiation Exposures

During the design of the earlier CANDU 6 plants, AECL carried out a program to review the plant with respect to radiation exposure of the station personnel. The aim was to estimate the radiation exposure for those systems that contribute significant doses and to make recommendations to reduce radiation exposure to as low as reasonably achievable (ALARA) levels.

The program included the preparation of preliminary estimates for the total station dose and a review of the individual systems for exposures.

The targets postulated for the CANDU 6 were based on experience for a mature station. Since then, improvements in controlling the heat transport system chemistry, lower fuel failure rates, and the development of the decontamination procedures have all contributed to lower radiation fields from corrosion and fission products around the heat transport system components. The specification of low cobalt steels for the heat transport system components, including the steam generator tube material, should also provide further dose reductions in newly built stations. The use of driers for heavy water vapour recovery and better control of leakage from process systems has reduced the tritium exposures to a corresponding degree. Based on CANDU 6 experience, the occupational radiation doses for ACR-700 are estimated to be an average of 1 person-Sv/a over the plant lifetime.

12.7 References

12-1 International Commission on Radiological Protection, ICRP-60.

12-2 ANISN, "A One-Dimensional Discrete Ordinates Transport Code with Anisotropic Scattering," RSIC Computer Code Collection, Oak Ridge National Laboratory, Oak Ridge, Tennessee, CCC-82 (1968).

12-3 DOT 4.2, "Two-Dimensional Discrete Ordinates Transport Code System," RSIC Computer Code Collection, Oak Ridge National Laboratory, Oak Ridge, Tennessee, CCC-320 (1979).

TABLE OF CONTENTS

SECTION **PAGE**

13. UNIT DATA 13-1

13.1 Introduction 13-1
13.2 Nuclear Steam Plant and Balance of Plant Data 13-1
13.2.1 ASI (AECL Subject Index) 13-1
13.2.2 Applicable Codes and Standards 13-2
13.3 Shared Facilities and Systems 13-3
13.3.1 Shared Facilities 13-3
13.3.2 Shared Systems 13-3

13. UNIT DATA

13.1 Introduction

This section provides the high level data describing the major buildings and equipment associated with the first unit of the integrated two-unit ACR-700 plant. All of the buildings and equipment identified are repeated in the second unit, unless otherwise identified as being common to the two-unit plant.

Some components and special items required to complete each building or system are not listed. For example, items in this category include: concrete, re-bar, pipe, pipe hangers, fittings, valves, instrumentation and controls, and miscellaneous hardware. This section also does not list those instruments and controls that are supplied as part of mechanical, process or electrical equipment.

13.2 Nuclear Steam Plant and Balance of Plant Data

The key technical data for the ACR-700 nuclear power plant major systems, components, structures and facilities is given in Table 13.2-1. All operating and performance data are nominal values at full power unless defined otherwise. This includes key data for nuclear steam plant, and balance of plant data.

This section lists the data for typical conventional plant facilities, equipment and systems based on annual average condenser cooling water temperature of 18.8°C. Actual values will be dependent upon specific turbine-generator, condenser designs, and the specific site condenser cooling water temperature. Some of the data presented will change once the specific site conditions are known.

13.2.1 ASI (AECL Subject Index)

The reference ACR-700 unit data is presented in ascending numeric order of their assigned AECL subject index (ASI) number. This ASI is the corporate wide subject index numbering scheme used by AECL to identify various buildings, systems and equipment associated with the development, design, construction and commissioning of a CANDU nuclear power plant. The first nine divisions are used for CANDU projects and are based on the CANDU 6 basic subject index (BSI), updated to accommodate changes in the ACR design.

13.2.2 Applicable Codes and Standards

The unit data given in this section identifies the applicable Canadian Standards Association (CSA) codes for equipment manufactured in Canada. For suppliers outside of Canada, the equipment can be supplied to meet the CSA codes specified here or to the equivalent ASME codes. The equivalent ASME codes are as follows:

CSA N285.0 Class 1	ASME Section III Class 1
CSA N285.0 Class 2	ASME Section III Class 2
CSA N285.0 Class 3	ASME Section III Class 3
CSA N285.0 Class 6	ASME Section VIII / ANSI B51 Piping code.

The quality assurance (QA) program shall meet the requirements of ISO 9001-2000. Any exclusions permitted under Clause 1.2 of this standard shall be limited to those specifically noted in the tender documents. The suppliers shall also comply with the other quality assurance requirements specified in the equipment tender documents.

For those countries which have their own equivalent standards to the CSA/ASME and the ISO QA standards, the suppliers can offer to manufacture to alternative standards, subject to acceptance by AECL.

13.3 Shared Facilities and Systems

13.3.1 Shared Facilities

The following buildings/facilities of the integrated two-unit ACR-700 plant are shared between the two units:

- Main Control Building
- Maintenance Building
- Service Building

The main control building, service building, and maintenance building are located between the two units to optimise and integrate the common services, facilities to support the operation of the plant. These buildings share control, maintenance, administration, service areas and some common process systems.

For the description and the systems inside these buildings, refer to Section 3.

In addition, the following site facilities will serve the two-unit ACR-700 plant:

- Administration Building
- Switchyard Area
- Water Treatment Plant
- Sewage Treatment Plant
- Radioactive Waste Storage Facility
- Guard House

13.3.2 Shared Systems

The following process systems will serve the two-unit ACR-700 plant:

- D_2O Supply System
- H_2O Supply System
- D_2O Cleanup System
- Chilled Water System (non-seismic qualified portion)
- Service Air System
- Breathing Air System
- Compressed Air System
- Firewater System

- Demineralized Water System
- Domestic Water System

Table 13.2-1
Unit Data Listing

ASI	Description	ACR-700 Unit Data	Units
00000	**GENERAL PROJECT**		
	Number of Units in Station	2	
	Net Output of Unit, Nominal	703	MWe
	Gross Electrical Output of Unit	753	MWe
	House Load	50	MWe
	Total Thermal Output/unit	2034	MW(th)
	Overall Net Efficiency, Nominal	34.6%	
	Overall Unit Gross Efficiency	37.0%	%
	Time from Contract Effective Date to In-Service (First Unit)	60	months
	Time from Contract Effective Date to In-Service (Nth Unit)	48	months
01000	**GENERAL ENGINEERING**		
	Design Basis Earthquake - Peak Horizontal Acceleration	0.3g	
	Plant Exclusion Area Boundary (EAB)	500	m
03000	**ENGINEERING SCIENCE AND TECHNOLOGY**		
03300	**NUCLEAR ENGINEERING**		
03310	**REACTOR PHYSICS AND DYNAMICS**		
	NOMINAL CORE DATA		
	Number of channels	292	
	Cell Array	Square	
	Lattice Pitch	220	mm
	Core Radius, Effective	5200	mm
	Core Length	5944	mm
	Average Reflector Thickness at Midpoint	480	mm
	Total Fission Power	2114.4	MW
	Core Thermal Power	2037	MW(th)
	Maximum Time-Average Channel Power	7.3	MW(th)
	Maximum time-average Bundle Power	850	kW(th)
	Maximum Instantaneous Channel Power	7.8	MW(th)
	Maximum Instantaneous Bundle Power	930	kW(th)
	Maximum Instantaneous Linear Element Rating	53	kW/m
	Load cycling	75 to 100% Nominal Power	%
	Full-core Coolant-Void Reactivity	Slightly negative (-7 mk)	mk

ASI	Description	ACR-700 Unit Data	Units
10000	**SITE IMPROVEMENTS**		
20000	**BUILDINGS AND STRUCTURES**		
21000	**REACTOR BUILDING**	Seismically qualified, steel-lined, prestressed concrete	
	Form	Upright cylinder with flat base and a spherical dome	
	Material	Prestressed concrete with steel liner	
	Inside Diameter	39.5	m
	Height - Base slab to inside top of dome	59	m
	Designed for: LOCA Pressure	250	kPa(g)
	Designed for: MSLB Pressure	450	kPa(g)
	Wall thickness	1.2	m
	Net Building Air Volume (Containment)	47800	m^3
	Test Acceptance Leakage Rate at LOCA Pressure of 250 kPa(g)	0.2% Volume/day	
21600	**SPECIAL EQUIPMENT**		
Equipment	**2160-AL1**	**Main Equipment Airlock**	
	Overall Dimensions	5.8 m internal diameter and 11.5 m long	m
	SHIELDING DOORS, FM MAINTENANCE LOCK		
	Quantity	2 (A side; C side)	
	Location	RB - between maintenance locks and equipment lay down areas	
	SHIELDING DOORS, FM VAULT		
	Quantity	2 (A side; C side)	
	Location	RB - 1 between each FM maintenance lock and FM vault	
22000	**TURBINE BUILDING**		
23000	**COOLING WATER STRUCTURES**		
	CONDENSER COOLING WATER PUMPHOUSE	Non-seismically qualified rectangular concrete and steel structure to house the Condenser Cooling Water Pumps.	

ASI	Description	ACR-700 Unit Data	Units
	RAW SERVICE WATER PUMPHOUSE	Seismically qualified rectangular concrete and steel structure to house the Raw Service Water Pumps.	
24000	**REACTOR AUXILIARY BUILDING (includes Secondary Control Area)**		
25000	**CONTROL BUILDING**		
	MAIN CONTROL BUILDING	(Common structure for 2 units) Seismically qualified concrete and steel structure, houses control equipment and main control rooms for each unit, work control areas, technical support centre, miscellaneous offices, kitchen and washroom facilities, and ventilation system.	
26000	**SERVICE BUILDINGS**		
	MAINTENANCE BUILDING	(Common structure for 2 units) Seismically qualified concrete and steel structure houses the basic facilities for maintenance of the two-unit plant.	
	SERVICE BUILDING	(Common structure for 2 units) Non-seismically qualified concrete and steel structure providing conventional plant services and administrative services.	
30000	**REACTOR, REACTOR SYSTEMS AND AUXILIARY SYSTEMS**		
31000	**REACTOR**		
31100	**FUEL CHANNEL ASSEMBLIES**		
	Quantity	292	
	Fuel Channel Type	Horizontal Zr 2.5wt% Nb alloy with modified 403 SS endfittings	
	Overall length including end fittings	12.048	m
	PT Flow Area (Cold and Unpressurized):	8397.1	mm^2

ASI	Description	ACR-700 Unit Data	Units
	Element Cross Sectional Area	4780.6	mm^2
	Coolant Flow Area	3616.6	mm^2
31110	**PRESSURE TUBES**		
	Quantity	292	
	Material	25 to 29 % CW, Zr-2.5wt%Nb	
	Dimensions: (Cold)		
	Length Trimmed for Installation (Approximate)	6.52	m
	Inside Diameter, Min.	103.4	mm
	Wall Thickness, Min.	6.5	mm
	Weight, Average	97.4	kg
31120	**END FITTING ASSEMBLY**		
	Quantity	584	
	End Fitting Material:	AISI modified Type 403 SS	
	Liner Tube	Removable 3 piece, ASTM-A268 Grade TP410	
	Bellows Attachment Ring	Carbon Steel, ASTM A148	
	Length	2.98	m
	Estimated Weight	155	kg
	FUEL CHANNEL POSITIONING ASSEMBLY		
	Stud:		
	Quantity	1168	
	Material	CS ASTM 193 B7	
	Pin:		
	Quantity	1168	
	Material	Stainless steel 420H	
	Nut:		
	Quantity	1168	
	Material	CS ASTM A-194 G7	
	Yoke:		
	Quantity	584	
	Material	CS ASTM A36	
	Fuel Support Plug		
	Quantity	584	
	Material:		
	Latch	TBD	
	Length	395	mm
	Estimated Weight	4	kg

ASI	Description	ACR-700 Unit Data	Units
31140	**CHANNEL CLOSURE**		
	Quantity	584	
	Material:	SA-564 Type 630	
	Estimated Weight	13	kg
31150	**END FITTING BEARINGS**		
	Quantity, per fuel channel:	2 inboard sets, 2 outboard sets	
	Material:		
	Journals	Tool Steel, AISI Type D2	
	Sleeves	Tool Steel, AISI Type A2	
31160	**FUEL CHANNEL ANNULUS SPACERS**		
	Type	garter spring (welded coil ends and welded girdle wire)	
	Quantity	1168	
	Material	Inconel x 750	
	Inside Diameter	112.35	mm
	Coil Wire Size	0.76 x 0.76	mm^2
	Girdle Wire Diameter	1.25	mm
31170	**FEEDER CONNECTIONS**		
	Quantity	584	
	Type:	bolted joint	
	Quantity	4672	
	Flanged Elbow:		
	Quantity	584	
	Material	Type 403 SS casting (ASME SA-487 CA6NM)	
	Gasket:		
	Quantity	584	
	Material	Inconel 718	
31180	**CHANNEL ANNULUS BELLOWS**		
	Quantity	584	
	Bellows Material	Inconel-600 (UNS N06600)	
	Bellows Ferrule Material	304 SS (UNS S30403) to ASME SA 312 TP 304 L or SA 182F304L	
	Bellows Flange Ring	CS to ASME SA 105 or ASME SA 106 Grade C	

ASI	Description	ACR-700 Unit Data	Units
31200	**CALANDRIA ASSEMBLY**		
	Overall Length	7.8	m
	Calandria Inside Length	5.94	m
	Calandria Inside Diameter	5.2	m
	Lattice Pitch	220	mm
	Calandria Moderator Net Volume	101	m^3
	Overpressure Relief Openings at top of Calandria:		
	Quantity	4	
	Size	658	m^3
31210	**CALANDRIA SHELL**		
	Quantity	1	
	Form	Horizontal cylinder	
	Material	Stainless steel to ASME SA240 plate and ASME SA182 (Forgings)	
	Wall Thickness	25	mm
31220	**END SHIELD ASSEMBLIES**		
	Quantity	2	
	Form	Cylindrical vessel with inner and outer tubesheets, penetrated axially by 292 lattice tubes; filled with steel shielding balls	
	Material:		
	Vessel	Type 304L stainless steel	
	Tube Sheets	Type 304L stainless steel	
	Filler	Carbon steel balls	
	Lattice Tubes	Type 304L stainless steel	
	Dimensions:		
	Overall length (including both tubesheets)	914.0	mm
	Tubesheets:	-	
	Calandria tubesheet thickness	80	mm
	Fuelling tubesheet thickness	80	mm
	Lattice pitch	220	mm
	Steel Filler Balls:		
	Diameter	9.5 to 12.7	mm

ASI	Description	ACR-700 Unit Data	Units
31231	**CALANDRIA TUBES**		
	Quantity	292	
	Material	Zirconium Alloy Grade R60804	
	Dimensions:		
	Length (overall installed)	6.04	m
	Inside diameter	151	mm
	Wall thickness	2.5	mm
	Outside diameter	156	mm
	Inside Surface Emissivity Factor	>0.7	
31281	**RUPTURE DISCS**		
	Quantity	4	
	Description	457.2 mm nominal rupture discs	
31700	**REACTIVITY CONTROL UNITS**		
31710	**REACTIVITY MECHANISM DECK**		
	Material	Carbon steel top and bottom plates and webs, filled with ordinary concrete	
	Dimensions:		
	Length (in reactor radial direction)	4.4	m
	Width (in reactor axial direction)	6	m
31714	**VIEWING PORTS AND STARTUP UNIT EQUIPMENT**		
	Quantity	2	
31730	**SHUT OFF UNITS**		
	Quantity	24	
	Shutoff Rods:		
	Drive Mechanism:	Electrical winch with electromagnetic clutch	
	Shutoff Rod Insertion Mechanism	Gravity Insertion	
31740	**IN-CORE FLUX DETECTOR UNITS**		
31741	**VERTICAL FLUX DETECTOR ASSEMBLIES**		
	No. of Assemblies	16	
	Type	Factory sealed, encapsulated, multi-detector assembly; Straight Individually Replaceable (SIR), Hilborn, self-powered, platinum, and vanadium detectors	

ASI	Description	ACR-700 Unit Data	Units
31750	**ZONE CONTROL UNITS**		
	Quantity	9 two-zone mechanical	
	Type	Mechanical (i.e., no liquid) Two independently controlled rectangular cross-section absorber elements moving in a common guide assembly	
31760	**LIQUID INJECTION SHUTDOWN UNITS**		
	Quantity	6	
	Type	Perforated nozzle-tubes to inject liquid poison into the moderator	
	Poison Injected	Gadolinium Nitrate solution in D2O (8000 ppm)	
31770	**CONTROL ABSORBER UNITS**		
	Quantity	8	
	Drive Mechanisms:	Electrical winch with electromagnetic clutch	
	Control Absorber Element Insertion Mechanism	Gravity Insertion	
31790	**ION CHAMBER UNITS/FISSION CHAMBER UNITS**		
	Quantity	6 housings (TBC)	
	Access Tubes:		
	Material	Stainless steel	
	No. of Tubes per Unit	3	
	Material:		
	Shell	Stainless steel	
	Shielding	Reactor-grade lead (for ion chambers only)	
	Insert Tubes	High-purity aluminum	
	Shield Plugs:		
	Material	High-purity aluminum bar	
31900	**INSTALLATION AND MAINTENANCE EQUIPMENT**		
	Quantity	One set of equipment for the two units.	

ASI	Description	ACR-700 Unit Data	Units
32000	**MODERATOR AND AUXILIARY SYSTEMS**		
32100	**MODERATOR SYSTEM**		
	Moderator	Heavy Water (D_2O)	
	Calandria Inlet Temperature	57	°C
	Calandria Outlet Temperature	80	°C
	Applicable Code	CSA N285.0 Class 3	
Equipment	**3211-HX1 and -HX2**	**Moderator Heat Exchangers**	
	Type	Plate	
	Quantity	2	
	Capacity	50	%
	Heat Transferred	44.3	MW(th)
	Hot Side Data:		
	Fluid	D_2O	
	Flow Rate	430	L/s
	Design Pressure	1.65	MPa(g)
	Design Temperature	104	°C
	Cold Side Data:		
	Fluid	H_2O (RCW)	
	Flow Rate	412	L/s
	Hot (Tube) Side - Material	Plates: AISI 316 stainless steel	
	Hot (Tube) Side - Material	Stainless steel	
	Applicable Code:		
	Hot Side	CSA N285.0 Class 3	
		(or ASME equivalent)	
	Cold Side	CSA N285.0 Class 6	
		(or ASME equivalent)	
Equipment	**3211-P1 and -P2**	**Pumps**	
	Type	Vertically mounted, radially split centrifugal (Double suction)	
	Quantity	2	
	Fluid	D_2O	
	Flow Rate	860	L/s
	Head	55	m
	Design Pressure	1.65	MPa(g)
	Design Temperature	104	°C
	Capacity, each	100%	
	Main Motor Data		
	Type	Squirrel cage induction motor	

ASI	Description	ACR-700 Unit Data	Units
	Power Supply	Class III	
	Reduced Speed Operation		
	Speed	pony motor ¼ main motor speed	
	Power Supply	Class III	
	Materials in Contact with fluid	Austenitic stainless steel	
	Applicable Code	CSA N285.0 Class 3	
		(or ASME equivalent)	
Equipment	**3211-TK1**	**Calandria Head Tank**	
	Quantity	1	
	Type	Horizontal cylinder with dished heads	
	Capacity	4.4	m^3
	Design Pressure	0.5 (internal) TBD (external)	MPa(g)
	Design Temperature	121	°C
	Material	Austenitic stainless steel	
	Applicable Code	CSA N285.0 Class 3	
		(or ASME equivalent)	
32210	**MODERATOR PURIFICATION SYSTEM**		
Equipment	**3221-HX1**	**Moderator Purification Heat Exchanger**	
	Type	plate type	
	Quantity	1	
	Capacity	100%	
	Heat Transferred	1.7	MW(th)
	Tube Side Data:		
	Fluid	D_2O	
	Flow Rate	12	kg/s
	Design Pressure	1.65	MPa(g)
	Design Temperature	104	°C
	Shell Side Data:		
	Fluid	H_2O (RCW)	
	Flow Rate	26.7	kg/s
	Design Pressure	1.65	MPa(g)
	Design Temperature	104	°C
	Tube Side - Material	AISI 316, Stainless Steel	
	Tube Outside Diameter		mm
	Shell Side - Material	AISI 316, Stainless Steel	
	Tube Side	CSA N285.0 Class 3	

ASI	Description	ACR-700 Unit Data	Units
		(or ASME equivalent)	
	Shell Side	CSA N285.0 Class 6	
		(or ASME equivalent)	
Equipment	**3221-IX1 to IX4**	**Moderator Purification Ion Exchange Columns**	
	Quantity	4	
	Type	Vertical cylinder with dished top and conical bottom	
	Total Volume	255	L
	Resin Capacity	200	L
	Type of Screen	Open Slot	
	Design Conditions:		
	Maximum Flow Rate	6.32	kg/s
	Direction of Flow	Downward	
	Design Pressure	1.65	MPa(g)
	Design Temperature	104	°C
	Material	Austenitic stainless steel	
	Applicable Code	CSA N285.0 Class 3	
		(or ASME equivalent)	
32310	**MODERATOR COVER GAS SYSTEM**		
Equipment	**3231-HR1 and -HR2**	**Cover Gas Preheaters**	
	Quantity	2	
	Type	Strip heater, split type	
	Heater Rating	1.2	kW
	Power Supply	Class IV	
	Fluid	Helium, D_2, O_2, and D_2O Vapour	
	Flow Rate (STP)	4.7 max. (TBC), 2.4 normal (TBC)	L/s
	Design Pressure	138	kPa(g)
	Design Temperature	260	°C
	Material	Austenitic stainless steel	
	Applicable Code	CSA C22.2 No.88	
Equipment	**3231-HR3 to -HR5**	**Cover Gas Preheaters**	
	Quantity	3	
	Type	Wrap around	

ASI	Description	ACR-700 Unit Data	Units
	Heater Rating	1.5	kW
	Power Supply	Class IV	
	Fluid	He, D_2, O_2, and D_2O vapour	
	Flow Rate (STP)	4.7 max. (TBC) 2.4 normal.	L/s
	Design Pressure	138	kPa(g)
	Design Temperature	260	°C
	Material	Austenitic stainless steel	
	Applicable Code	CSA N285.0 Class 3	
		(or ASME Equivalent)	
Equipment	**3231-HX1**	**Cover Gas Cooler**	
	Quantity	1	
	Type	Finned-pipe type	
	Shell Side:		
	Fluid	He and D_2O Vapour	
	Flow Rate (max)	4.7 NL/s	L/s
	Design Pressure	138	kPa(g)
	Design Temperature	427	
	Tube Side:		
	Coolant	RCW	
	Flow Rate	0.8	L/s
	Design Pressure	1.2	MPa(g)
	Design Temperature	60	°C
	Applicable Code	CSA N285.0 Class 3 (or ASME equivalent)	
Equipment	**3231-CP1 and -CP2**	**Compressors**	
	Type	Liquid ring	
	Quantity	2	
	Fluid	Helium, heavy water vapour, deuterium, oxygen	
	Flow Rate (STP)	4.7	L/s
	Design Pressure	138	kPa(g)
	Design Temperature	127	°C
	Capacity	100%	%
	Motor Data		
	Type	3-Phase, squirrel cage induction motor	
	Power Supply	Class III	

ASI	Description	ACR-700 Unit Data	Units
	Materials in Contact with Fluid	Austenitic Stainless Steel	
	Applicable Code	CSA N285.0, Class 3	
		(or ASME equivalent)	
Equipment	**3231-P1 and -P2**	**Booster Pumps**	
	Type	Peristaltic hose pump	
	Quantity	2	
	Fluid	D_2O	
	Flow Rate	0.76	L/s
	Head	16.8	m
	Design Pressure	1.65	MPa(g)
	Design Temperature	104	°C
	Capacity	100%	
	Main Motor Data		
	Power Supply	Class III	
	Applicable Code	ASME, Sec III Class 3	
Equipment	**3231-TK1**	**Delay Tank**	
	Type	Flat heads; internal baffles	
	Quantity	1	
	Fluid	D_2O	
	Capacity	95	L
	Design Pressure	1.65	MPa(g)
	Design Temperature	104	°C
	Material	Austenitic stainless steel	
	Applicable Code	CSA N285.0 Class 3	
Equipment	**3231-RU1 and RU2**	**Recombination Units**	
	Type	Palladium catalyst bed enclosed in a vertical cylinder with dished heads	
	Quantity	2	
	Capacity	100%	%
	Type	Palladium pellets	
	Quantity of Pellets (per recombiner)	6.57	L
	Pellet Diameter	3.2	mm
	Fluid	He and D_2O Vapour and D_2 and O_2	
	Flow Rate (STP)	4.7 max. (TBC)	L/s
		2.4 normal (TBC)	L/s
	Deuterium Concentration	0% - 4%	
	Design Pressure	138	kPa(g)

ASI	Description	ACR-700 Unit Data	Units
	Design Temperature	427	°C
	Shell Material	Austenitic stainless steel	
	Applicable Code	CSA N285.0 Class 3 (or ASME equivalent)	
	3231-FA1 to FA4	**Flame Arrestors**	
	Type	Sintered Metal	
	Quantity	4	
	Material	Austenitic stainless steel	
	Design Pressure	138	kPa(g)
	Design Temperature	427	°C
	Shell Material	Stainless Steel	
	Applicable Code	CSA N285.0 Class 3 (or ASME equivalent)	
32510	**MODERATOR HEAVY WATER COLLECTION SYSTEM**		
Equipment	**3251-P1**	**D_2O Collection Pump**	
	Type	Magnetic Driven Canned Pump	
	Quantity	1	
	Fluid	D_2O	
	Flow Rate	1.1	L/s
	Head	30	m
	Design Pressure	0.52	MPa(g)
	Design Temperature	101	°C
	Main Motor Data:		
	Type	3-Phase, squirrel cage induction motor	
	Power Supply	Class IV	
	Materials in Contact with fluid	Austenitic stainless steel	
	Applicable Code	CSA N285.0 Class 3	
		(or ASME equivalent)	
Equipment	**3251-TK1**	**D_2O Collection Tank**	
	Type	Vertical cylinder with dished heads	
	Quantity	1	
	Capacity	500	L
	Design Pressure	0.21	MPa(g)
	Design Temperature	104	°C
	Material	Austenitic stainless steel	

ASI	Description	ACR-700 Unit Data	Units
	Applicable Code	CSA N285.0 Class 3	
Equipment	**3251-STR1**	**Strainer**	
	Type	"Y"	
	Body Material	Stainless steel	
	Screen Size	60 mesh	
	Design Flow	1.1	L/s
	Design Temperature	104	°C
	Design Pressure	0.21	MPa(g)
	Applicable Code	CSA N285.0 Class 3 (or ASME equivalent)	
32710	**MODERATOR LIQUID POISON SYSTEM**		
Equipment	**3271-P1 and -P2**	**Poison Solution Sampling Pumps**	
	Type	Canned centrifugal	
	Quantity	2	
	Fluid	Poison solution in D_2O	
	Flow Rate	190	mL/s
	Head	6.4	m
	Design Pressure	1.65	MPa(g)
	Design Temperature	104	°C
	Main Motor Data:		
	Type	Single Phase, squirrel cage induction motor	
	Power Supply	Class IV	
	Materials in Contact with fluid	Austenitic stainless steel	
	Applicable Code	CSA N285.0 Class 3 (or ASME equivalent)	
Equipment	**3271-TK1 and TK2**	**Poison Mixing Tanks**	
	Type	Vertical cylinder with dished heads	
	Quantity	2	
	Fluid	D_2O + poison	
	Capacity	176	L
	Design Pressure	1.65	MPa(g)
	Design Temperature	104	°C
	Material	Austenitic stainless steel	
	Applicable Code	CSA N285.0 Class 3	
Equipment	**3271-AG1 and AG2**	**Poison Mixers**	

ASI	Description	ACR-700 Unit Data	Units
	Type	Electric motor-driven agitator, mounted in mixing tank	
	Quantity	2	
	Motor Data:		
	Type	3-Phase, squirrel cage induction motor	
	Power Supply	Class IV	
	Material in Contact with D2O	Austenitic stainless steel	
33000	**HEAT TRANSPORT AND AUXILIARY SYSTEMS**		
33100	**HEAT TRANSPORT SYSTEM**		
Equipment	**3311-SG1 and SG2**	**Steam Generator**	
	Type	Vertical U-tube with integral preheater	
	Quantity	2	
	Capacity	2x50%	
	Heat transferred	2034 (total for 2 SGs)	MW(th)
	Tube Side Data:		
	Fluid	H_2O	
	Flow Rate	7.13 (total for 2 SGs)	Mg/s
	Inlet Temperature	326	°C
	Inlet Pressure	11.9	MPa(g)
	Inlet Quality	2.3	%
	Outlet Temperature	279.5	°C
	Design Pressure	13.1	MPa(g)
	Design Temperature	332	°C
	Shell Side Data:		
	Fluid	H_2O	
	Steam Flow	1.094 (total for 2 SGs)	Mg/s
	Feedwater Inlet Temperature	215	°C
	Pressure at Drum Nozzle	6.4	MPa(g)
	Temperature at drum nozzle	281	°C
	Quality at Drum Nozzle	99.9%	
	Design Pressure	6.9	MPa(g)
	Design Temperature	290	°C
	Tube Material	Nickel-Iron-Chromium	
	Tube Outside Diameter	17.4	mm
	Tube Wall Thickness	1.067	mm
	Shell Material	Carbon steel	
	Applicable Code:		

ASI	Description	ACR-700 Unit Data	Units
	Tube Side	CSA N285.0 Class 1 (or ASME equivalent)	
	Shell Side	CSA N285.0 Class 1 (or ASME equivalent)	
Equipment	**3312-P1, -P2, -P3 and -P4**	**Heat Transport Pumps**	
	Type	Vertical, centrifugal, single-suction, double-discharge	
	Quantity	4	
	Fluid	H_2O	
	Flow Rate	2350	L/s
	Head	235	m
	Operating Temperature	279.5	°C
	Design Pressure	15.1	MPa(g)
	Design Temperature	294	°C
	Capacity	4 x 25%	
	Main Motor Data		
	Type	AC, Vertical, squirrel cage induction motor	
	Power Supply	Class IV	
	Power Rating	6.4	MWe
	Materials in Contact with Fluid	Carbon steel	
	Applicable Code	CSA N285.0 Class 1 (or ASME equivalent)	
33126	**FEEDERS**		
	Quantity	584	
	Material:	SA312 type 316N SS	
	Dimensions:		
	Inside Diameter		
	Size 1	85.4	mm
	Size 2	73.7	mm
	Size 3	59	mm
	Size 4	53	mm
	Design Pressure, outlet	13.1	MPa(g)
	Design Pressure, inlet	15.1	MPa(g)
	Design Temperature, inlet	294	°C
	Design Temperature, outlet	332	°C
	Applicable Code	CSA N285.0 Class 1 (or ASME equivalent)	
Equipment	**3312-RIH1 and RIH2 -ROH1 and ROH2**	**Reactor Inlet/Outlet Headers**	
	Quantity:		
	Inlet Headers	2	

ASI	Description	ACR-700 Unit Data	Units
	Outlet Headers	2	
	Material	ASME SA106 Grade C	
	Dimensions:		
	Inside Diameter:		
	Inlet Header	495	mm
	Outlet Header	540	mm
	Operating Pressure:		
	Outlet Headers	12.1	MPa(g)
	Inlet Headers	13.3	MPa(g)
	Design Pressure:		
	Outlet Headers	13.1	MPa(g)
	Inlet Headers	15.1	MPa(g)
	Operating Temperature:		
	Outlet Headers	326	°C
	Inlet Headers	280	°C
	Design Temperature:		
	Outlet Headers	332	°C
	Inlet Headers	294	°C
	Applicable Code	CSA N285.0 Class 1 (or ASME equivalent)	
33300	**HEAT TRANSPORT SYSTEM AUXILIARIES**		
33310	**HEAT TRANSPORT PRESSURE AND INVENTORY CONTROL SYSTEM**		
Equipment	**3331-P1 and -P2**	**Heat Transport Pressurizing Pumps**	
	Type	Multi-stage horizontal	
	Quantity	2	
	Fluid	H_2O	
	Flow Rate	24	L/s
	Head	1390	m
	Design Pressure	17.4	MPa(g)
	Design Temperature	104	°C
	Capacity	100%	
	Main Motor Data		
	Type	Horizontal, squirrel cage, induction motor	
	Power Supply	Class III	
	Materials in contact with fluid	Carbon steel	
	Applicable Code	CSA N285.0 Class 6	
		(or ASME equivalent)	
Equipment	**3331-HX1**	**Bleed Cooler**	

ASI	Description	ACR-700 Unit Data	Units
	Type	Horizontal U-tube-in-shell	
	Quantity	1	
	Capacity	100%	
	Heat Transferred	13.2	MW(th)
	Tube Side Data:		
	Fluid	H_2O	
	Flow Rate	22	kg/s
	Design Pressure	13.1	MPa(g)
	Design Temperature	332	°C
	Shell Side Data:		
	Fluid	H_2O (RCW)	
	Flow Rate	121	kg/s
	Design Pressure	1.03	MPa(g)
	Design Temperature	121	°C
	Tube Side - Material	ASME SB163 UNS-N08800, modified	
	Shell Side - Material	Carbon steel	
	Applicable Code:		
	Tube Side	CSA N285.0 Class 1 (or ASME equivalent)	
	Shell Side	CSA N285.0 Class 6 (or ASME equivalent)	
Equipment	**3331-TK1**	**Pressurizer**	
	Type	Vertical cylinder with hemispherical heads	
	Quantity	1	
	Fluid	H_2O	
	Capacity	55	m^3
	Design Pressure	13.1	MPa(g)
	Design Temperature	332	°C
	Material in Contact with Fluid	Carbon steel	
	Immersion Heaters		
	Quantity	5	
	Capacity, total	1	MW(e)
	Power supply	Class IV	
	Applicable Code	CSA N285.0 Class 1	
		(or ASME equivalent)	
Equipment	**3331-TK2**	**Coolant Storage Tank**	
	Type	Vertical cylinder	
	Quantity	1	
	Capacity	48	m^3

ASI	Description	ACR-700 Unit Data	Units
	Design Pressure	700 - Internal 110 - External	kPa(g)
	Design Temperature	104	°C
	Material	Carbon steel	
	Applicable Code	CSA N285.0 Class 6 (or ASME equivalent)	
Equipment	**3331-TK3**	**Bleed Condenser**	
	Type	Vertical cylinder with hemispherical heads	
	Quantity	1	
	Fluid	H_2O	
	Capacity	16	m^3
	Design Pressure	13.1	MPa(g)
	Design Temperature	332	°C
	Material in Contact with Fluid	Carbon steel	
	Applicable Code	CSA N285.0 Class 1 (or ASME equivalent)	
33350	**HEAT TRANSPORT PURIFICATION SYSTEM**		
Equipment	**3335-FR1**	**Purification Filter**	
	Quantity	1	
	Capacity	100%	%
	Type	Removable cartridges housed in pressure vessel	
	Design Flow Rate	25	kg/s
	Direction of Flow in Cartridges	Radially inward	
	Design Pressure	3.2	MPa(g)
	Design Temperature Filter Vessel	93	°C
	Material	Carbon steel	
	Applicable Code	CSA N285.0 Class 6 (or ASME equivalent)	
Equipment	**3335-IX1 and IX2**	**Ion Exchange Columns**	
	Quantity	2	
	Type	Vertical cylinder	
	Volume	480	L
	Resin Capacity	360	L
	Design Flow Rate, each	12.5	kg/s
	Direction of Flow	downward	
	Design Pressure	3.2	MPa(g)
	Design Temperature	93	°C

ASI	Description	ACR-700 Unit Data	Units
	Material	Carbon steel with austenitic stainless steel inlet and outlet assembly	
	Applicable Code	CSA N285.0 Class 6	
34000	**AUXILIARY SYSTEMS**		
34110	**SHIELD COOLING SYSTEM**		
Equipment	**3411-HX1 and -HX2**	**Shield Cooling Heat Exchangers**	
	Type	Plate	
	Quantity	2	
	Capacity	50% (normal) 75% (when only one is operating)	%
	Heat Transferred (each)	3.0 (normal) 6.0 (abnormal)	MW(th)
	Hot Side Data:		
	Fluid	Demineralized H_2O	
	Flow Rate	76	L/s
	Design Pressure	0.9	MPa(g)
	Design Temperature	93	°C
	Cold Side Data:		
	Fluid	H_2O (RCW)	
	Flow Rate	65.5	L/s
	Applicable Code:		
	Hot Side	CSA N285.0 Class 6 (or ASME equivalent)	
	Cold Side	CSA N285.0 Class 6 (or ASME equivalent)	
Equipment	**3411-P1 and -P2**	**Pumps**	
	Type	Centrifugal	
	Quantity	2	
	Fluid	Demineralized H_2O	
	Flow Rate	TBD	L/s
	Head	44	m
	Design Pressure	1.03	MPa(g)
	Design Temperature	93	°C
	Main Motor Data		
	Type	Squirrel cage induction motor	
	Power Supply	Class III	
	Materials in Contact with Fluid	Carbon steel	
	Applicable Code	CSA N285.0 Class 6	
		(or ASME equivalent)	

ASI	Description	ACR-700 Unit Data	Units
Equipment	**3411-TK1**	**Shield Cooling Expansion Tank**	
	Type	Horizontal cylinder with dished ends	
	Quantity	1	
	Fluid	H_2O with Air cover gas	
	Capacity	3.71	m^3
	Design Pressure	0.5	MPa(g)
	Design Temperature	60	°C
	Material	Carbon steel	
	Applicable Code	CSA N285.0 Class 6 (or ASME equivalent)	
Equipment	**3411-IX1**	**Shield Cooling Ion Exchange Column**	
	Quantity	1	
	Type	Vertical cylinder, dished top, conical bottom	
	Volume	255 L	L
	Resin Capacity	200	L
	Type of Screen	Wedge-wire	
	Design Conditions:		
	Maximum Flow Rate	10.5	L/s
	Direction of Flow	Downward	
	Design Pressure	1.03	MPa(g)
	Design Temperature	93	°C
	Material	Austenitic stainless steel	
	Applicable Code	CSA N285.0 Class 6 (or ASME equivalent)	
34300	**EMERGENCY CORE COOLING SYSTEM AND RESERVE WATER SYSTEM**		
34320	**EMERGENCY COOLANT INJECTION SYSTEM**		
Equipment	**3432-TK1 and TK2**	**ECI Accumulator**	
	Type	Vertical cylinder with hemispherical heads	
	Quantity	2	
	Fluid	N2, water	
	Capacity, each	170	m^3
	Design Pressure	5.6	MPa(g)
	Design Temperature	170	°C
	Material	Carbon steel	

ASI	Description	ACR-700 Unit Data	Units
	Applicable Code	CSA N285.0 Class 3 (or ASME equivalent)	
34340	**RESERVE WATER SYSTEM**		
Equipment	**3434-TK1**	**RWS Tank**	
	Volume, tank is open to RB atmosphere	2500	m^3
34350	**LONG TERM COOLING SYSTEM**		
Equipment	**3435-HX1 and -HX2**	**Long Term Cooling Heat Exchangers**	
	Type	shell & tube	
	Quantity	2	
	Heat transferred	(11, 32)	MW(th)
	Tube Side Data:		
	Fluid	HTS coolant or Recovered water	
	Flow Rate	(166, 332)	L/s
	Design Pressure	8.9	MPa(g)
	Design Temperature	294	°C
	Shell Side Data (RCW side):		
	Fluid	H_2O(RCW)	
	Flow Rate	606	L/s
	Design Pressure	1.03	MPa(g)
	Design Temperature	121	°C
	Tube Side - Material	Incoloy 800	
	Tube Outside Diameter	15.9	mm
	Shell Side - Material	Inconel	
	Applicable Code:		
	Tube Side	CSA N285.0 Class 2 (or ASME equivalent)	
	Shell Side	CSA N285.0 Class 6 (or ASME equivalent)	
Equipment	**3435-P1 to -P4**	**Long Term Cooling Pumps**	
	Type	Vertical, centrifugal	
	Quantity	4	
	Fluid	H_2O	
	Flow Rate	332 @ 65 °C	kg/s
	Head	70	m
	Design Pressure	8.9	MPa(g)
	Design Temperature	294	°C
	Main Motor Data		

ASI	Description	ACR-700 Unit Data	Units
	Type	Vertical squirrel cage induction motor - TEWAC	
	Power Supply	Class III	
	Materials in Contact with Fluid	Carbon steel	
	Applicable Code	CSA N285.0 Class 2 (or ASME equivalent)	
34400	**SPENT FUEL BAY SYSTEMS**		
Equipment	**3441-HX1 and -HX2**	**Storage Bay Cooler**	
	Type	Horizontal, Plate Type	
	Quantity	2	
	Heat Transferred	0.6/3.6	MW(th)
	Hot Side Data:		
	Fluid	H_2O	
	Flow Rate	105	L/s
	Design Pressure	1.03	MPa(g)
	Design Temperature	49	°C
	Cold Side Data:		
	Fluid	H_2O (RCW)	
	Flow Rate	120	L/s
	Design Pressure	1.03	MPa(g)
	Design Temperature	49	°C
	Hot Side - Material	Stainless Steel	
	Cold Side - Material	Stainless Steel	
	Applicable Code:		
	Hot Side	CSA N285.0 Class 6 (or ASME equivalent)	
	Cold Side	CSA N285.0 Class 6 (or ASME equivalent)	
Equipment	**3441-P1, -P2 and -P3**	**Spent Fuel Bay Cooling and Purification Pumps**	
	Type	Centrifugal	
	Quantity	3	
	Fluid	H_2O	
	Flow Rate (each)	105	L/s
	Head	40 m	
	Design Pressure	1.03	MPa(g)
	Design Temperature	49	°C
	Main Motor Data:		
	Type	3 Phase, squirrel cage induction motor	
	Power Supply	Class III	

ASI	Description	ACR-700 Unit Data	Units
	Materials in Contact with Fluid	Austenitic stainless steel	
	Applicable Code	CSA N285.0 Class 6 (or ASME equivalent)	
	3441-IX1 and IX2	**Spent Fuel Bay Ion Exchange Columns**	
	Quantity	2	
	Type	Vertical cylinder with dished top and conical bottom	
	Resin Capacity	1500	L
	Maximum Flow Rate (each)	27	L/s
	Direction of Flow	Downward	
	Design Pressure	1.03	MPa(g)
	Design Temperature	49	°C
	Material	Austenitic stainless steel	
	Applicable Code	CSA N285.0 Class 6 (or ASME equivalent)	
34510	**RESIN TRANSFER SYSTEM**		
Equipment	**3451-TK1**	**Fresh Resin Transfer Tank**	
	Type	Vertical cylinder with dished top and conical bottom	
	Quantity	1	
	Capacity	675	L
	Design Pressure	1.03	MPa(g)
	Design Temperature	93	°C
	Material in Contact with Fluid	Stainless steel	
	Applicable Code	CSA N285.0 Class 6 (or ASME equivalent)	
34710	**LIQUID INJECTION SHUTDOWN SYSTEM**		
Equipment	**3471-PV1, PV2, PV3, PV4**	**Quick Opening Valves**	
	Quantity	4	
	Flow paths	2 (2 valves per path)	
	Design Pressure	10.3	MPa(g)
	Design Temperature	93	°C
Equipment	**3471-TK1 to TK6**	**Gadolinium Pressure Vessels**	
	Type	Cylindrical shell capped at each end by heads with ball	

ASI	Description	ACR-700 Unit Data	Units
	Quantity	6	
	Volume	0.069	m^3
	Material:		
	Shell and Heads	Austenitic stainless steel	
	Ball	Solid polyethylene	
	Design Pressure	10.3	MPa(g)
	Design Temperature	93	°C
	Contents:		
	During Normal Reactor Operation	8000 ppm of gadolinium in D2O	
	During Poison Injection	Helium	
	Applicable Code	CSA N285.0 Class 1 (or ASME equivalent)	
Equipment	**3471-TK7**	**Helium Supply Tank**	
	Quantity	1	
	Description	Cylindrical shell capped at each end	
	Material:		
	Shell and Heads	Austenitic stainless steel	
	Dimensions:		
	Volume	1.13	m^3
	Design Pressure	10.3	MPa(g)
	Design Temperature	93	°C
	Contents, During Normal Reactor Operation	Pressurized helium gas	
	Applicable Code	CSA N285.0 Class 3 (or ASME equivalent)	
Equipment	**3471-TK8**	**Gadolinium Mixing Tank**	
	Quantity	1	
	Description	Cylindrical shell capped at each end by dished heads	
	Material	Austenitic stainless steel	
	Dimensions:		
	Volume	0.7	m^3
	Design Pressure	690	kPa(g)
	Design Temperature	93	°C
	Contents	8000 ppm of gadolinium in D2O	

ASI	Description	ACR-700 Unit Data	Units
	Applicable Code	CSA N285.0 Class 3 (or ASME equivalent)	
34900	**MISCELLANEOUS REACTOR PROCESS SYSTEMS**		
34980	**ANNULUS GAS SYSTEM**		
Equipment	**3498-HX1**	**Heat Exchanger**	
	Type	Air cooled natural circulation	
	Quantity	1	
	Tube Side Data:		
	Fluid	CO2	
	Flow Rate	20	L/s
	Design Pressure	0.4	MPa(g)
	Design Temperature	232	°C
	Shell Side Data:		
	Fluid	Air	
	Design Pressure	414	kPa(g)
	Design Temperature	232	°C
	Tube Side - Material	Austenitic stainless steel	
	Shell Side - Material (fins)	Aluminum	
	Seismic Qualification Level	NBCC 2	
	Applicable Code	CSA N285.0 Class 6 (or ASME equivalent)	
Equipment	**3498-CP1 , -CP2 and -CP3**	**Compressors**	
	Type	Metal Bellows Compressor with Viton Valve Gaskets	
	Quantity	3x50%	
	Fluid	CO_2	
	Flow Rate (STP)	10	L/s
	Design Pressure	100	kPa(g)
	Capacity	10	L/s
	Motor Data		
	Type	3-Phase, squirrel cage induction motor	
	Power Supply	Class IV	
	Material	Stainless Steel	
	Applicable Code	CSA N285.0 Class 6 (or ASME equivalent)	
35000	**FUEL HANDLING AND STORAGE**		
35100	**NEW FUEL TRANSFER AND STORAGE**		

ASI	Description	ACR-700 Unit Data	Units
35110	**NEW FUEL TRANSFER SYSTEM**		
35111	**NEW FUEL TRANSFER MECHANISM**		
	Quantity	2 (A-side; C-side)	
	Location	New Fuel Loading Room, in RAB adjacent to RB containment wall	
	Duty, Average (total for 2 Ports)	Passing of 20.3 pairs of NF bundles per week	
	Loading Trough Capacity	2 new fuel bundles	
	Loading Ram	1 per mechanism	
	NF Transfer Mechanism Loading Ram Drive (loads new fuel into the NF magazine)	1 brushless DC motor (with integral single turn resolver & brake)	
	Magazine Capacity	12 new fuel bundles & 1 shield plug	
	NF Transfer Mechanism Magazine Drive	1 brushless DC motor (with integral single turn resolver & brake)	
	Transfer Ram	1 per mechanism	
	NF Transfer Mechanism Transfer Ram Drive (Transfers fuel from NF magazine to fuelling machine)	1 brushless DC motor (with integral single turn resolver & brake)	
Equipment	**Magazine Isolation Valve**		
	Quantity	2 (A-side; C-side)	
	Location	Containment wall	
Equipment	**Fuel Bundle Lifting Attachment**		
	Quantity	2 (A-side; C-side)	
	Location	New fuel balancing hoist	
Equipment	**Spacer Interlocking Gauge**		
	Quantity	2 (A-side; C-side)	
Equipment	**New Fuel Port Valves**	Inner and outer full bore containment isolation valves	
	Quantity	4 (2 on A-side; 2 on C-side)	
	Location	In RAB, in NF loading area	
	Applicable Code	CSA N285.0 Class 2	
Equipment	**New Fuel Port Relief Valves**		
	Quantity	2 (A-side; C-side)	
	Applicable Code	CSA N285.0 Class 2	

ASI	Description	ACR-700 Unit Data	Units
35120	**NEW FUEL STORAGE AND HANDLING**		
Equipment	**Name**	**New Fuel Container Lifting Attachment**	
	Quantity	2 (A-side; C-side)	
	Location	Attached to crane hook	
	Capacity	3.5	Mg
Equipment	**Name**	**New Fuel Storage Racks**	
	Storage Capacity	9 months equilibrium fuelling	
	Function	To store containers of new fuel	
	Location	New Fuel Storage Room	
35200	**FUEL CHANGING**		
35210	**FUELLING MACHINE HEAD**		
	Quantity	2 (A-side; C-side)	
	Length	7.7	m
	Weight (Loaded and Filled)	13.7	Mg
	Volume of D2O (H2O for ACR)	636	L
	Design Pressure	15.5	MPa(g)
	Design Temperature	149	°C
	Operating Pressure	13.8	MPa(g)
	Operating Temperature	32 to 66	°C
	Applicable Code	CSA N285.0 Class 1 (or ASME equivalent)	
35211	SNOUT ASSEMBLY		
	Quantity	2 (1 on A-side FM head; 1 on C-side FM head)	
35213	MAGAZINE		
	Quantity	2 (1 on A-side FM head; 1 on C-side FM head)	
	Number of Rotor Stations	14	
35214	RAM ASSEMBLY		
	Quantity	2 (1 on A-side FM head; 1 on C-side FM head)	
	Speed of B Ram	500	mm/s
	Speed of Latch Ram	1.8	mm/s
35215	SNOUT PLUG		
	Quantity	2 (1 on A-side FM head; 1 on C-side FM head)	
	Weight	20	kg
	Type of Seal	“O” Ring	

ASI	Description	ACR-700 Unit Data	Units
	No. of Jaws	4	
	Material	Stainless steel	
	Length	355	mm
	Diameter	120.6	mm
35220	**FUELLING MACHINE BRIDGE & CARRIAGE**		
	Number of Columns	8 (4 on A-side assembly; 4 on C-side assembly)	
	Height of columns	9.1	m
	Length of bridge	12	m
	Travel of bridge	5	m
	Weight of bridge & columns	41 per set	Mg
	Length of Maintenance lock track	10	m
	Seismic Brakes	8 Seismic brakes with status limit switches (A side; C side)	
35224	CARRIAGE STRUCTURES		
	Quantity	2 (A-side; C-side)	
	Location	Underslung from the maintenance lock tracks or bridge	
	Weight (Without FM Head or Cable and Hose Management System)	12.3	Mg
	Travel on Bridge	9	m
	Travel on Maintenance Lock Track	8	m
35230	**FUELLING MACHINE WATER SYSTEM**		
	Quantity	1 system (services A-side & C-side fuelling machines)	
	Applicable Code	CSA N285.0 Class 1 and CSA B.51 Class 6	
35250	**FUELLING MACHINE GAS AUXILIARY SYSTEM**	Supplies from (i) HT Nitrogen Addition System and (ii) RB instrument air	
35260	**FUELLING MACHINE EMERGENCY WATER SYSTEM**		
	Quantity	1 system (supplies A-side & C-side fuelling machines and spent fuel transfer systems)	
	Applicable Code	CSA N285.0 Class 2 and CSA B.51 Class 6	

ASI	Description	ACR-700 Unit Data	Units
35300	**SPENT FUEL TRANSFER AND STORAGE**		
35310	**SPENT FUEL DISCHARGE SYSTEM**		
35311	**SPENT FUEL DISCHARGE PORT**		
	Quantity	2 (A-side; C-side)	
	Location	Containment wall	
	Duty Average (total for 2 Ports)	Transfer of 20.3 pairs spent fuel bundles per week	
	Applicable Code	CSA N285.0 Class 2 (or ASME equivalent)	
35330	**SPENT FUEL TRANSFER EQUIPMENT**		
Equipment	**Spent Fuel Transfer Mechanism**		
	Quantity	2 (A side; C side)	
	Location	A-side and C-side Spent Fuel Reception Bays (part of Spent Fuel Bay)	
	Duty, Average (total for 2 mechanisms)	Transfer of 20.3 pairs of SF bundles per week	
	Discharge Ram		
	Magazine Capacity	12 spent fuel bundles and 1 piece of hardware	
	Return Ram		
	Applicable Code	CSA B.51 Class 6	
35340	**SPENT FUEL SEMI-AUTOMATIC EQUIPMENT**		
Equipment	**Name**	**Spent Fuel Basket Loading Mechanism**	
	Quantity	2 (A-side; C-side)	
	Location	A-side and C-side Spent Fuel Reception Bays (part of Spent Fuel Bay)	
	Duty, Average (total for 2 mechanisms)	Loading of 40.6 SF bundles per week	
Equipment	**Spent Fuel Basket Inter-Bay Conveyor**		
	Quantity	1	
	Location	Inter-Bay Transfer Tunnel (part of Spent Fuel Bay)	
	Duty, Average	Transfer of 5 spent fuel baskets per month	

ASI	Description	ACR-700 Unit Data	Units
35350	**SPENT FUEL TRANSFER PROCESS SYSTEMS**		
	Quantity	1 system (supplies two spent fuel transfer systems)	
	Applicable Code	CSA N285.0 Class 2 and CSA B.51 Class 6	
35360	**STORAGE BAY**		
Structure	**Name**	Spent Fuel Storage Bay	
	Quantity	1	
	Capacity (SF Bundles)	28200	
Structure	**Name**	Spent Fuel Reception Bay	
	Quantity	2 (A side; C side)	
	Capacity (SF Bundles)	792 (per reception bay)	
Structure	**Name**	Reactivity Mechanism Storage Bay	
	Quantity	1	
35363	**MANBRIDGE**		
	Description	Over-running crane with platform	
	Quantity	1	
	Capacity	3.5	Mg
	Travel	Length of spent fuel bay	
	Drive	Electric motor	
	Hook	Swivel safety hook	
	Walkway:		
	Width	915	mm
	Length	Equal to width of bay	
	Kick Plates (Both Sides)	150 mm high	
	Railings (Both Sides)	Equal to width of bay	
	Design Load	900 kg uniformly distributed over any 3 m of length	
	Illumination	Shrouded anti-glare lights on bay periphery with local spotlights below manbridge deck	
35370	**SHIELDED WORKSTATION**	(outside the initial station supply scope)	
	Quantity	1	

ASI	Description	ACR-700 Unit Data	Units
	Function	Dry baskets full of SF and seal in a helium environment, in preparation for interim SF dry storage.	
35600	**MAINTENANCE AND SERVICE FACILITIES**		
35680	**SPENT FUEL TRANSFER TOOLS AND ACCESSORIES**		
	Quantity	1 set	
35690	**MANUAL FUEL LOADING EQUIPMENT**		
Equipment	Name	Manual Loading Mechanism	
	Quantity	2	
35700	**FUELLING MACHINE TRANSFER**		
35730	**CABLE AND HOSE MANAGEMENT SYSTEM**		
	Quantity	2 (A side; C side)	
	Location	FM maintenance lock (one end attached to fuelling machine)	
36000	**STEAM GENERATOR SYSTEMS**		
36000	**STEAM AND RELIEF SYSTEMS**		
36110	**MAIN STEAM AND FEEDWATER SYSTEM**		
Equipment	**3611-MV1 to -MV4**	**Main Steam Isolation Valves (MSIV's)**	
	Quantity	4	
	Type	Gate	
	Rating	600	lb
	Material	Carbon Steel	
	Disc	Stainless Steel	
	Seat	Stainless Steel	
	Fluid	Sat. Steam, max. wetness 0.1% weight	
	Normal Flow	269	kg/s
	Design Pressure	6.9	MPa(g)
	Design Temperature	286	°C
	Seismic Qualification Level	DBE Cat B	
	Applicable Code	CSA N285.0 Class 2 (or ASME equivalent)	
	Location	One on each steam line	
	Actuator	Electric motorized	

ASI	Description	ACR-700 Unit Data	Units
36140	**MAIN STEAM PRESSURE CONTROL AND RELIEF SYSTEM**		
Equipment	**3614-PSV1 to PSV8**	**Main Steam Safety Valves (MSSV's)**	
	Quantity	8	
	Type	Spring Loaded	
	Actuator	Pneumatic	
	Rating	900	lb
	Material	Carbon Steel	
	Disc Material	Stainless Steel	
	Seat Material	Stainless Steel	
	Fluid	Sat. Steam max wetness 0.1% weight	
	Min. Capacity per valve	TBD	kg/s
	Design Pressure	6.9	MPa(g)
	Design Temperature	286	°C
	Location	2 on each main steam line	
	Applicable Code	CSA N285.0 Class 2 (or ASME equivalent)	
36400	**CONTROLLED STEAM DISCHARGE SYSTEMS—BLOWOFF**		
Equipment	**3641-PCV1 to PCV4**	**Atmospheric Steam Discharge Valves (ASDV's)**	
	Quantity	4	
	Type	Pneumatic Globe	
	Rating	600	lb
	Material	Carbon Steel	
	Disc	Stainless Steel	
	Seat	Stainless Steel	
	Fluid	Sat. Steam, max. wetness 0.1% weight	
	Capacity per valve	27.4	kg/s
	Design Pressure	6.9	MPa(g)
	Design Temperature	286	°C
	Seismic Qualification Level	DBE Cat A	
	Capacity, Maximum Each	25 (TBC)	kg/s
	Discharge	To atmosphere through a silencer	
	Actuator	Pneumatic, fail closed	
	Applicable Code	CSA N285.0 Class 6 (or ASME equivalent)	

ASI	Description	ACR-700 Unit Data	Units
36910	**H2O Leakage Collection System**		
Equipment	**3691-HX1**	**Cooling Tank Cooling Coil**	
	Type	Tube in Shell	
	Quantity	1	
	Heat Transferred	0.12	
	Hot Side Data:		
	Fluid	H_2O	
	Temperature	38 ~ 66	°C
	Design Pressure	0.69	MPa(g)
	Design Temperature	121	°C
	Cold Side Data:		
	Fluid	H_2O (RCW)	
	Flow Rate	3.5	L/s
	Design Pressure	1.03	MPa(g)
	Design Temperature	93	°C
	Applicable Code:		
	Tube Side	CSA N285.0 Class 6 (or ASME Equivalent)	
	Shell Side	CSA N285.0 Class 6 (or ASME Equivalent)	
37000	**FUEL**		
	General:		
	Fissionable Material	Sintered pellets of slightly enriched UO2 & natural UO2	
	Enrichment Level	Average 2.1 wt% U-235 in 42 elements, central NU element with Dysprosium	
	Fuel burn-up	20,500	MWd/te U
	Cladding Material	Zircaloy-4	
	Type of Assembly	Welded bundle of 43cylindrical elements in circular array with brazed appendages	
	Fuel Bundle Assembly	43 element CANFLEX	
	Mass of UO2 in Reactor	71.481	Mg
	Mass of U in Reactor	63.002	Mg
	Pellets:		
	Diameter	10.65 / 12.58	mm
	Stack length	481.1	mm
	Number per stack (average)	45 / 30	

ASI	Description	ACR-700 Unit Data	Units
	Density (nominal)	10.65	g/cm^3
	Sheath:		
	Outside Diameter (nominal)	11.5 / 13.5	mm
	End Plates:		
	Diameter (nominal)	90.8	mm
	Thickness (nominal)	1.6	mm
	Bundle Assembly:		
	Pitch Circle Diameters:		
	- Outer (21 elements)	87.7	mm
	- Intermediate (14 elements)	61.5	mm
	- Inner (7 elements)	34.68	mm
	- Centre (l element only)		
	Bundle Length	495.3	mm
	Bundle Diameter (max.)	103	mm
	UO2 mass	20.4	kg
	U mass	17.98	kg
	Zircaloy-4 mass	2.3	kg
	Bundle weight	22.7 (includes 18 kg U)	kg
	No. of Bundles in Reactor	3504	
	No. of Bundles per Channel	12	
38000	**WATER MANAGEMENT**		
38010	**HEAVY WATER INVENTORY**		
	D2O Inventory Required to Fill All Moderator and Associated Systems, and D2O Management System	126	Mg
	Heat Transport and Associated Systems including fuel handling Reserve	0	Mg
	Reserve	4	Mg
	Total	130	Mg
38100	**WATER SUPPLY SYSTEM**		
38110	**HEAVY WATER SUPPLY SYSTEM**		
Equipment	**3811-P1 and -P2**	**D2O Supply Pumps**	
	Type	Canned Centrifugal	
	Quantity	2	
	Capacity	100%	
	Fluid	D_2O	
	Flow rate	3.5	L/s
	Head	75 m	
	Design Pressure	1.03	MPa(g)
	Design Temperature	110	°C
	Motor Data:		

ASI	Description	ACR-700 Unit Data	Units
	Type	3-phase, squirrel cage induction motor	
	Power Supply	Class IV	
	Materials in Contact with D2O	Austenitic stainless steel	
	Applicable Code	CSA N285.0 Class 3 (or ASME equivalent)	
Equipment	**3811-TK1 and TK2**	**D2O Storage Tanks**	
	Quantity (common for 2 units)	2	
	Type	Horizontal cylinder with dished ends	
	Capacity per tank	65	m^3
	Design Pressure	0.100	MPa(g)
	Design Temperature	110	°C
	Material	Austenitic stainless steel	
	Applicable Code	CSA N285.0 Class 3 (or ASME equivalent)	
38120	**LIGHT WATER SUPPLY SYSTEM**		
Equipment	**3812-P1 and P2 (common for 2 units)**	**H2O Supply Pumps**	
	Type	Canned Centrifugal	
	Quantity	2	
	Capacity	100%	
	Fluid	H_2O	
	Flow rate	8	L/s
	Head	75	m
	Design Pressure	1.03	MPa(g)
	Design Temperature	66	°C
	Motor Data:		
	Type	3-phase, squirrel cage induction motor	
	Power Supply	Class IV	
	Materials in Contact with fluid	Stainless Steel	
	Applicable Code	CSA N285.0 Class 6 (or ASME equivalent)	
Equipment	**3812-TK1 and TK2**	**H2O Storage Tanks**	
	Quantity (common for 2 units)	2	
	Type	Horizontal cylinder with dished ends	
	Capacity per tank	72	m^3
	Design Pressure	0.1	MPa(g)
	Design Temperature	66	°C
	Material	Stainless Steel	

ASI	Description	ACR-700 Unit Data	Units
	Applicable Code	CSA N285.0 Class 6 (or ASME equivalent)	
38310	**HEAVY WATER VAPOUR RECOVERY SYSTEM**		
Equipment	**3831-P1**	**D2O Vapour Recovery Collection Pumps**	
	Type	Canned centrifugal	
	Quantity	1	
	Fluid	Downgraded D2O	
	Flow Rate	0.25	L/s
	Head	15	m
	Design Pressure	1.03	MPa(g)
	Design Temperature	93	°C
	Motor Data:		
	Type	3-Phase, squirrel cage induction motor	
	Power Supply	Class IV	
	Materials in Contact with Fluid	Austenitic stainless steel	
	Applicable Code	CSA N285.0 Class 3 (or ASME equivalent)	
Equipment	**3831-TK1**	**D_2O Collection Tank**	
	Quantity	1	
	Type	Vertical cylinder with dished ends	
	TK1	200	L
	Design Pressure	0.12	MPa(g)
	Design Temperature	66	°C
	Material	Austenitic stainless steel	
	Applicable Code	CSA N285.0 Class 3 (or ASME equivalent)	
Equipment	**3831-DR1, -DR2**	**Dryers**	
	Type	Rotary wheel desiccant	
	Quantity	2	
	Capacity	100%	
	Fluid	light and heavy water vapour	
	Capacity per unit	6800	m^3/h
	Max Reactivation Temp	145	°C
	D2O Recovery Capacity	0.068 D2O 5.2 H2O	kg/h
	Reactivation Flow	1147	m^3/h

ASI	Description	ACR-700 Unit Data	Units
	Design Pressure	0.003	MPa(g)
	Applicable Code	CSA N285.0 Class 6	
38400	**WATER CLEAN-UP AND UPGRADING SYSTEMS**		
38410	**HEAVY WATER CLEAN-UP SYSTEM**		
Equipment	**3841-P1 and -P2**	**D2O Cleanup Pumps**	
	Type	Canned centrifugal	
	Quantity	2	
	Capacity	100%	%
	Fluid	D_2O	
	Flow Rate	1.1	L/s
	Head	20 m	
	Design Temperature	66	°C
Equipment	**3841-P3**	**D2O Storage Pumps**	
	Type	Canned centrifugal	
	Quantity	1	
	Fluid	D_2O	
	Flow Rate	4	L/s
	Head	10	m
	Design Temperature	66	°C
	Motor Data:		
	Type	3-Phase, squirrel cage induction	
	Power Supply	Class IV	
	Materials in Contact with fluid	Austenitic stainless steel	
	Applicable Code	CSA N285.0 Class 3 (or ASME equivalent)	
Equipment	**3841-TK3 to TK4**	**Product Tanks**	
	Quantity	2	
	Type	Vertical cylinder with dished heads	
	Capacity, each	3	m^3
	Design Pressure	0.2	MPa(g)
	Design Temperature	66	°C
	Material	Austenitic stainless steel	
	Applicable Code	CSA N285.0 Class 3 (or ASME equivalent)	
Equipment	**3841-TK10**	**Head Tank**	
	Quantity	1	

ASI	Description	ACR-700 Unit Data	Units
	Type	Vertical cylinder with dished heads	
	Capacity	289	L
	Contents	Demineralized water	
	Design Pressure	1.034	MPa(g)
	Design Temperature	66	°C
	Material	Austenitic Stainless Steel	
	Applicable Code	CSA N285.0 Class 6 (or ASME equivalent)	
Equipment	**3841-TK1 and TK2**	**Feed Tanks**	
	Quantity	2	
	Type	Vertical cylinder with dished heads	
	Capacity, each	6	m^3
	Design Pressure	1.03	MPa(g)
	Design Temperature	66	°C
	Material	Austenitic stainless steel	
	Applicable Code	CSA N285.0 Class 3 (or ASME equivalent)	
Equipment	**3841-FR1**	**D2O Cleanup Charcoal Filter**	
	Quantity	1	
	Type	Vertical cylinder with dished top and conical bottom	
	Volume	255	L
	Flow Rate	1.1	L/s
	Direction of Flow	Downward	
	Design Pressure	1.65	MPa(g)
	Design Temperature	93	°C
	Material	Austenitic stainless steel	
	Applicable Code	CSA N285.0 Class 3 (or ASME equivalent)	
Equipment	**3841-IX1, IX2 and IX3**	**D2O Cleanup Ion Exchange**	
	Columns:		
	Quantity	2	
	Type	Vertical cylinder with dished to and conical bottom	

ASI	Description	ACR-700 Unit Data	Units
	Volume	255	L
	Flow Rate	1.1	L/s
	Direction of Flow	Downward	
	Design Pressure	1.65	MPa(g)
	Design Temperature	93	°C
	Material	Austenitic stainless steel	
	Applicable Code	CSA N285.0 Class 3 (or ASME equivalent)	
40000	**TURBINE-GENERATOR AND AUXILIARIES**		
41000	**TURBINE GENERATOR**		
	THERMAL CYCLE AND HEAT BALANCE		
	Steam Flowrate at SG Outlet	1094	kg/s
	Steam pressure at SG outlet	6.4	MPa(g)
	Feedwater Flow Rate to SG	1105	kg/s
	Feedwater Temperature to SG	215	°C
	Net Thermal Power to Turbine	2030	MWth
	No. of LP feedheating stages	3	
	No. of HP feedheating stages	2	
	FW heater drains to	Next Lower heater	
	Boiler feed pump drive	Electric Motor	
	FW heater terminal temperature difference	2.2	ºC
	Gross/Net Generator Output	753/703	MWe
	Condenser Pressure	4.9	kPa(a)
	Design CCW inlet temperature	18.8	ºC
41100	**TURBINE AND AUXILIARY EQUIPMENT**		
41110	**TURBINE**		
	Steam Turbine Type	Impulse type, tandem compound, double exhaust flow, reheat condensing type with last stage blade height 52 inches, hydrogen/water cooled,	
	Steam Turbine Type (Tech Outline)	Impulse type, tandem compound double exhaust flow, reheat condensing turbine with a last stage blade length of 132 cm (52 inches)	

ASI	Description	ACR-700 Unit Data	Units
	Steam Turbine Composition	One single flow, high-pressure cylinder, two external moisture separators/reheaters, and two double flow low-pressure cylinders	
	Number of HP Cylinders	One single flow	
	Number of LP Cylinders	Two double flow	
	Last Stage Blade Height	52	inch
	Moisture Separator and Reheater	2 stages, reheater	
	HP Turbine Inlet	6.2	Mpa(a)
	HP Turbine Inlet	279	°C
	Speed	1800	rpm
	Rated Output	753	MWe
	Gross Turbine Generator Efficiency	37.0	%
	STOP VALVES:		
	Quantity	4	
	CONTROL VALVES:		
	Quantity	4	
	INTERMEDIATE STOP VALVES		
	Quantity	4	
	INTERMEDIATE INTERCEPT VALVES		
	Quantity	4	
41130	**REHEAT SYSTEM**		
	MOISTURE SEPARATOR AND REHEATERS	2 stages, reheater	
	Quantity	2	
	Heating Source (1st stage)	HP turbine extraction steam	
	Heating Source (2nd stage)	Main Steam	
43000	**FEEDWATER AND AUXILIARY STEAM SYSTEMS**		
43200	**CONDENSATE AND FEEDWATER SYSTEMS**		
43230	**FEEDWATER SYSTEM**		
Equipment	**4323-P1,-P2, and -P3**	**Main Feedwater Pumps**	
	Type	Horizontal, centrifugal, multi-stage	
	Quantity	3	
	Flow Rate	663 (design), 602 (required)	L/s
	Head	835	m
	Fluid	Demineralized Water	

ASI	Description	ACR-700 Unit Data	Units
	Main Motor Data		
	Drive	Electric Motor	
	Type	Squirrel cage induction motor	
	Power Supply	Class IV	
	Applicable Code	CSA N285.0, Class 6 (or ASME equivalent)	
Equipment	**4323-P5, -P6**	**AUXILIARY FEEDWATER PUMP**	
	Type	horizontal, centrifugal, multi-stage	
	Quantity	2	
	Flow Rate	43	L/s
	Head	780	m
	Fluid Pumped	Demineralized Water	
	Main Motor Data		
	Type	3-Phase squirrel cage induction motor	
	Power Supply	Class III	
	Materials in Contact with Fluid	Carbon Steel	
	Applicable Code	CSA N285.0, Class 6 (or ASME equivalent)	
50000	**ELECTRIC POWER SYSTEMS**		
51000	**MAIN STATION CONNECTIONS**		
51100	**HIGH VOLTAGE SYSTEM NO. 1 (380 KV OR HIGHER)**		
51140	**POWER TRANSFORMERS**		
51141	**MAIN OUTPUT TRANSFORMER**		
	Rating	3 x 287 MVA (861 MVA) 1 ph	
	Class	OAF	
	Primary Voltage	24 kV delta	kV
	Secondary Voltage	500 kV star	
	HV Neutral grounding	Solid	
	Temperature - Oil	65	°C
	Temperature Rise - Winding	65	°C
	Impedance	14	%
	Taps	±5% HV side off-load top changes (5 steps)	
51143	**SYSTEM SERVICE TRANSFORMER (SST)**		
	Rating	65	MVA
	Class	OAF	

ASI	Description	ACR-700 Unit Data	Units
	Primary Voltage	500 kV star	kV
	Secondary Voltage	13.8 kV star / 4.16 kV star	kV
	Tertiary	Delta 30%	
	Impedance	11 @ 65 MVA	%
	Phase Displacement	in phase	
	Taps	±10% on HV on load	
51400	**HIGH VOLTAGE SYSTEM NO. 4 (MAIN GENERATOR - LESS THAN/OR 24 KV)**		
51410	**GENERATOR VOLTAGE OUTPUT SYSTEM**		
	Nominal Rating	24 kV, 3 phase, 50 Hz	
	Rated Maximum Voltage	24	kV
	Insulation Level - BIL	150	kV
	Current Rating (forced air) - Isophase bus (main)	25000	A
	Minimum Short-Time Sym. Current 1-Second	200	kA
	Minimum Asymmetrical Peak Current	540	kA
51440	**UNIT SERVICE TRANSFORMER (UST)**		
	Rating	65	MVA
	Class	OAF	
	Primary Voltage	22	kV
	Secondary Voltage	13.8/4.16	kV
	Impedance	11 @ 65 MVA	%
	Phase Displacement	HV lags LV by 30 degrees	
	Taps	±10% on HV side on load	
52000	**STANDBY GENERATORS**		
52100	**GENERATOR AND AUXILIARIES**		
Equipment	**5211-DG1, -DG2, -DG3, -DG4**	**Diesel Generators**	
	Number	4	
	Nameplate Rating	4000	kW
	Overload Capacity	110% (for 2 hrs in 24 hr period)	%
	Control/Aux Power Voltage, AC	600/347 V, 3 phase, 4 wire	
	Fuel type	Grade 2	
	Diesel Service Conditions		
	Installation	Indoor	
	Ambient Temperature	(design) 40 °C	

ASI	Description	ACR-700 Unit Data	Units
	Humidity	80% RH	
	Design Life	60	years
	Continuous Output	4000	kW
	Rated Speed RPM	600 (max)	RPM
	Aspiration	Turbocharged-after cooled	
	Engine Type	Diesel Four-Stroke Direct Injection	
	Steady State Speed Regulation	+/- 0.25	%
	Transient Speed Drop	+/- 5	%
	Storage Tank Capacity	7 days FL capacity	
	Day Tank Capacity	4	hours
	Generator Type	Brushless, Salient Pole Synchronous	
	Rated Continuous Output	4000	kW
	Power Factor	0.85 Lagging	
	Rated Terminal Voltage	4.16	kV
	Rated Frequency	60	Hz
	Overload Capability	110% for 2 hours	%
	Stator Winding	Wye, external Neutral	
	Stator Winding Insulation	Class F	
	Rotor Winding Insulation	Class F	
	Temperature Rise	Class B	
	Resistance Grounding	7	Ohm
	Current Rating	500A for 10 seconds	
	Maximum Temperature Rise	400	°C
	Starting facilities	Compressed air	
Equipment	**5211-PL01,-PL02, -PL03, -PL04, -PL05, - PL06**	**Protection Panels**	
	Generator Protection will be furnished by the manufacturer as a part of the supplied package:		
	Voltage Restraint over current	51V	
	Generator differential	87G	
	Negative sequence	46A and 46T	
	Loss of excitation	-40	
	Under voltage	-27	
	Over voltage	-59	
	Stator winding grounding	50/51 G	
	Over-excitation	-24	
	Rotor Grounding	64F	
	Mho impedance	-21	
	Reverse power	-32	

ASI	Description	ACR-700 Unit Data	Units
	Over/under frequency	-81	
	Thermal overload	-49	
	Institute of Electrical and Electronics Engineering (IEEE)	IEEE 1, 32, 43, 85, 112, 115, 115A, 308, 323, 334, 344, 387, 421.2, 577	
53000	**DISTRIBUTION SYSTEM**		
	No. of Class III Transformers, 4.16 kV - 600 V	8	
	Type	Dry, Indoor Metal Enclosed, VPI	
	Phases	3	
	Frequency	60	Hz
	Rating	6x2000 and 2x1000	kVA
	Winding	Delta/Wye	
	Impedance, percent	5.75	
	LV Neutral Grounding	Solid	
	Off-Load Tap (HV)	± 5%	
	No. of Class IV Transformers, 4 or 600 V	4 / 600	
	Type	Dry, Indoor Metal Enclosed, VPI	
	Phases	3	
	Cooling	AN	
	Winding	Delta/Wye	
	Rated Temp Rise	115	°C
	Impedance, percent	5.75	
	LV Neutral Grounding	Solid	
	Off-Load Tap (HV)	±5%	
	13.8 kV Distribution System		
	Number of buses	2	
	System Nominal Voltage	13.8	kV
	Short Circuit Rating	50 kA RMS	
	Bus bracing	100 kA RMS	
	Breaker Frame Size	2000 & 600	A
	4.16 kV Distribution System		
	System Nominal Voltage	4.16	kV
	Short Circuit Rating	63 kA RMS	
	Bus bracing	100 kA RMS	
	Breaker Frame Size	1200 & 600	
60000	**INSTRUMENTATION AND CONTROL**		
60200	**COMMUNICATIONS**		
60260	CLOSED CIRCUIT TELEVISION SYSTEM		

ASI	Description	ACR-700 Unit Data	Units
	Fuelling Machine Vault Cameras	2 (A-side; C-side) high resolution colour cameras with pan, tilt and zoom	
	FM Maintenance Lock Cameras	2 (A-side; C-side) high resolution colour cameras	
	Monitor and control unit	2 in MCR	
62000	**BUILDING AND STRUCTURES INSTRUMENTATION**		
62062	**SHIELDING DOOR CONTROLS**		
Equipment	**Fuelling Machine Shielding Door Motors**	Electric motors (TBD)	
	Quantity	4 (A side main/alternate) (C side main/alternate)	
Equipment	**Fuelling Machine Maintenance Lock Access Door Motors**	Electric motors (TBD)	
	Quantity	4 (A side main/alternate) (C side main/alternate)	
63000	**REACTOR, REACTOR SYSTEMS AND AUXILIARY SYSTEMS**		
63100	**REACTOR INSTRUMENTATION**		
63102	CHANNEL TEMPERATURE MONITORING		
	Thermowells and Guide Tubes	292	
	RTDs, connectors, high-temperature cable	292	
63103	GASEOUS FISSION PRODUCT MONITORING		
	No. of Germanium Gamma Detector Assembly	1	
	No. of Local Control Panel and Data Processor	1	
63500	**FUEL HANDLING CONTROL**		
68000	**SAFETY SYSTEMS**		
68200	SHUTDOWN SYSTEM NO. 1 (SDS1)	Trip Computers	
68300	SHUTDOWN SYSTEM NO. 2 (SDS2)	Trip Computers	
70000	**COMMON PROCESS AND SERVICES**		
71000	**WATER SYSTEMS**		
71300	**SERVICE WATER SYSTEMS**		
71310	**RAW SERVICE WATER SYSTEM**		
Equipment	**7131-P1, -P2, -P3 and -P4**	**Pumps**	

ASI	Description	ACR-700 Unit Data	Units
	Function	Raw service water supply	
	Type	vertical, centrifugal	
	Quantity	4	
	Fluid	Sea/River/Lake water	
	Flow Rate (pump)	1850	L/s
	Head	23	m
	Design Pressure	0.5	MPa(g)
	Design Temperature	40	°C
	Main Motor Data		
	Type	Induction	
	Power Supply	Class III	
	Materials in Contact with Fluid	Casing: ASTM A 439, Type D2 Impellor: ASTM A 743, CF8M	
	Applicable Code	CSA N285.0 Class 6 (or ASME equivalent)	
Equipment	**7131-P7001**	**Pumps**	
	Function	Raw service water supply	
	Type	horizontal, centrifugal	
	Quantity	1	
	Fluid	Sea/River/Lake water	
	Flow Rate (pump)	1050	L/s
	Head	13	m
	Design Pressure	0.5	MPa(g)
	Design Temperature	40	°C
	Main Motor Data		
	Type	Induction	
	Power Supply	Class III	
	Materials in Contact with Fluid	Casing: ASTM A 439, Type D2 Impellor: ASTM A 743, CF8M	
	Applicable Code	CSA N285.0 Class 6 (or ASME equivalent)	
Equipment	**7131-STR1 to STR4**	**Strainers**	
	Type	self-cleaning	
	Quantity	4	
	Design Flow	1850	L/s
	Retention Size	3	mm
	Design Pressure	0.5	MPa(g)

ASI	Description	ACR-700 Unit Data	Units
	Design Temperature	40	°C
	Applicable Code	CSA N285.0 Class 6 (or ASME equivalent)	
Equipment	**7131-STR7001**	**Strainers**	
	Type	self-cleaning	
	Quantity	1	
	Design Flow	1050	L/s
	Retention Size	3	mm
	Design Pressure	0.5	MPa(g)
	Design Temperature	40	°C
	Applicable Code	CSA N285.0 Class 6 (or ASME equivalent)	
71340	RECIRCULATED COOLING WATER SYSTEM		
Equipment	**7134-HX1 to HX8**	**Heat Exchangers**	
	Function	Recirculated cooling water heat sink	
	Type	Plate	
	Quantity	8 (six in 100% power operation)	
	Heat Transferred - normal oper.	29	MW
	Hot Side Data:		
	Fluid	Recirculated cooling water	
	Flow Rate	308	L/s
	Design Pressure	1.2	MPa(g)
	Design Temperature	49	°C
	Cold Side Data:		
	Fluid	Raw service water	
	Flow Rate	616	L/s
	Design Pressure	0.5	MPa(g)
	Design Temperature	40	°C
	Hot Side - Material	Titanium Plates	
	Cold Side - Material	Titanium Plates	
	Water Boxes	Carbon steel, epoxy-lined	
	Applicable Code	CSA N285.0 Class 6 (or ASME equivalent)	
Equipment	**7134-HX7001 to HX7008**	**Heat Exchangers**	
	Function	Recirculated cooling water heat sink	
	Type	Plate	
	Quantity	3	

ASI	Description	ACR-700 Unit Data	Units
	Heat Transferred - normal oper.	41.1	MW
	Hot Side Data:		
	Fluid	Recirculated cooling water	
	Flow Rate	471	L/s
	Design Pressure	1.2	MPa(g)
	Design Temperature	49	°C
	Cold Side Data:		
	Fluid	Raw service water	
	Flow Rate	525	L/s
	Design Pressure	0.5	MPa(g)
	Design Temperature	40	°C
	Hot Side - Material	Titanium Plates	
	Cold Side - Material	Titanium Plates	
	Water Boxes	Carbon steel, epoxy-lined	
	Applicable Code	CSA N285.0 Class 6 (or ASME equivalent)	
Equipment	**7134-P1, -P2, -P3 and -P4**	**Pumps**	
	Function	Recirculated cooling water circuit	
	Type	Horizontal, centrifugal Split Case	
	Quantity	4	
	Fluid	Demineralized water	
	Flow Rate	1550	L/s
	Head	48	m
	Design Pressure	1.2	MPa(g)
	Design Temperature	49	°C
	Main Motor Data		
	Type	Induction	
	Power Supply	Class III	
	Materials in Contact with Fluid	Cast iron casing and 316 SS impeller	
	Applicable Code	CSA N285.0 Class 6 (or ASME equivalent)	
Equipment	**7134-P7001, P7002**	**Pumps**	
	Function	Recirculated cooling water circuit	
	Type	Horizontal, centrifugal Split Case	
	Quantity	2	
	Fluid	Demineralized water	

ASI	Description	ACR-700 Unit Data	Units
	Flow Rate	950	L/s
	Head	12	m
	Design Pressure	1.2	MPa(g)
	Design Temperature	49	°C
	Main Motor Data		
	Type	Induction	
	Power Supply	Class III	
	Materials in Contact with Fluid	Cast iron casing and 316 SS impeller	
	Applicable Code	CSA N285.0 Class 6 (or ASME equivalent)	
Equipment	**7134-TK1 and TK2**	**Tanks**	
	Type	cylindrical	
	Quantity	2	
	Capacity	10	m^3
	Material	Carbon Steel	
	Design Pressure	Atmospheric	MPa(g)
	Design Temperature	49	°C
	Applicable Code	CSA N285.0 Class 6 (or ASME equivalent)	
Equipment	**7134-TK7001**	**Tanks**	
	Type	cylindrical	
	Quantity	1	
	Capacity	TBD	m^3
	Material	Carbon Steel	
	Design Pressure	Atmospheric	MPa(g)
	Design Temperature	49	°C
	Applicable Code	CSA N285.0 Class 6 (or ASME equivalent)	
Equipment	**7134-FR1 and FR2**	**FILTERS**	
	Type	Cartridge	
	Quantity	2	
	Design Flow	11.35	L/s
	Retention Size	5	micron
	Design Pressure	1.2	MPa(g)
	Design Temperature	49	°C
	Applicable Code	CSA N285.0 Class 6 (or ASME equivalent)	
Equipment	**7134-FR7001**	**FILTERS**	
	Type	Cartridge	
	Quantity	1	
	Design Flow	TBD	L/s

ASI	Description	ACR-700 Unit Data	Units
	Retention Size	5	micron
	Design Pressure	1.2	MPa(g)
	Design Temperature	49	°C
	Applicable Code	CSA N285.0 Class 6 (or ASME equivalent)	
71900	**CHILLED WATER SYSTEM**	Previously 71920, Turbine Building Chilled Water System	
	Non-safety Water Chillers	**7190-CG1 to CG4 (shared between 2 reactor units)**	
	Type	Centrifugal, water-cooled	
	Quantity	4	
	Capacity	33%	
	Heat Transferred	3868	kW
	Cooling Water Data:		
	Fluid	H_2O (RCW)	
	Flow Rate	93	L/s
	Design Pressure	1.035	MPa(g)
	Fluid	Demineralized Water	
	Flow Rate	146	L/s
	Seismic Qualification Level	N/A	
	Environmental Qualification	No	
	Applicable Code:		
	Hot Side	CSA N285.0 Class 6	
	Cold Side	CSA N285.0 Class 6	
	Main Motor Data		
	Type	Electric Motor	
	Power Supply	Class III	
	Supply Voltage	4160	V
	Capacity	820	KW
	Phase	3-phase	
	Frequency	60	Hz
	Safety Water Chillers	**7190-CG5 to CG6**	
	Type	Screwed, water-cooled	
	Quantity	2	
	Capacity	100%	
	Heat Transferred	879	kW
	Fluid	H_2O (RCW)	
	Flow Rate	22	L/s
	Design Pressure	1.035	MPa(g)
	Fluid	Demineralized Water	

ASI	Description	ACR-700 Unit Data	Units
	Flow Rate	25	L/s
	Seismic Qualification Level	DBE Cat B	
	Environmental Qualification	No	
	Applicable Code:		
	Hot Side	CSA N285.0 Class 6	
	Cold Side	CSA N285.0 Class 6	
	Main Motor Data		
	Type	Electric Motor	
	Power Supply	Class III	
	Supply Voltage	4000	V
	Capacity	217	KW
	Phase	3-phase	
	Frequency	60	Hz
	Name	Non-safety Chiller Circulation Pumps	
	Tag	**7190-P1, -P2 and -P3 (shared btw 2 reactor units)**	
	Type	Centrifugal	
	Quantity	3	
	Fluid	Demineralized Water	
	Flow Rate	219	L/s
	Head	12.5	m
	NPSHa	3	m
	Nozzle Size-Discharge	10	inch
	Nozzle Size-Suction	12	inch
	Duty	Two continuous, one on standby	
	Capacity, each	50%	%
	Main Motor Data		
	Type	Induction	
	Power Supply	Class IV	
	Supply Voltage	600	V
	Enclosure	Cast Iron	
	Capacity	37.3	KW
	Phase	3-phase	
	Frequency	60	Hz
	Construction		
	Materials in Contact with fluid	Cast Iron	
	Seismic Qualification Level	N/A	
	Environmental Qualification	No	
	Applicable Code	CSA N285.0 Class 6 (or ASME Equivalent)	

ASI	Description	ACR-700 Unit Data	Units
	Reference Technical Specification		
	Name	Safety Chiller Circulation Pumps	
	Tag	**7190-P7 and -P8**	
	Type	Centrifugal	
	Quantity	2	
	Fluid	Demineralized Water	
	Flow Rate	25	L/s
	Head	12.5	m
	NPSH	2	m
	Nozzle Size - Discharge	3	inch
	Nozzle Size - Suction	4	inch
	Duty	One continuous, one on standby	
	Capacity, each	100%	
	Main Motor Data		
	Type	Induction	
	Power Supply	Class III	
	Supply Voltage	600	V
	Enclosure	Cast Iron	
	Capacity	5.6	KW
	Phase	3-phase	
	Frequency	60	Hz
	Construction		
	Materials in Contact with fluid	Cast Iron	
	Seismic Qualification Level	DBE Cat B	
	Environmental Qualification	No	
	Applicable Code	CSA N285.0 Class 6 (or ASME Equivalent)	
	Name	Non-safety Chilled Water Distribution Pumps (Circuit-NSQ)	
	Tag	**7190-P4, -P5 and -P6**	
	Type	Centrifugal	
	Quantity	3	
	Fluid	Chilled Water	
	Flow Rate	219	L/s
	Head	36.9	m
	NPSHa	6.5	m
	Duty	2 continuous, one on standby	
	Capacity, each	50%	
	Main Motor Data		

ASI	Description	ACR-700 Unit Data	Units
	Type	Induction	
	Power Supply	Class IV	
	Supply Voltage	600	V
	Enclosure	Cast Iron	
	Capacity	112	KW
	Phase	3-phase	
	Frequency	60	Hz
	Construction		
	Materials in Contact with fluid	Cast Iron	
	Seismic Qualification Level	N/A	
	Environmental Qualification	No	
	Applicable Code	CSA N285.0 Class 6 (or ASME Equivalent)	
	Name	Safety Chilled Water Distribution Pumps (Circuit-SQ)	
	Tag	**7190-P9 and -P10**	
	Type	Centrifugal	
	Quantity	2	
	Fluid	Chilled Water	
	Flow Rate	25	L/s
	Head	36.9	m
	NPSHa	2	m
	Duty	One continuous, one on standby	
	Capacity, each	100%	
	Main Motor Data		
	Type	Induction	
	Power Supply	Class III	
	Supply Voltage	600	V
	Enclosure	Cast Iron	
	Capacity	18.5	KW
	Phase	3-phase	
	Frequency	60	Hz
	Construction		
	Materials in Contact with fluid	Cast Iron	
	Seismic Qualification Level	N/A	
	Environmental Qualification	No	
	Applicable Code	CSA N285.0 Class 6 (or ASME Equivalent)	
73000	**HEATING, COOLING AND VENTILATION SYSTEMS**		
73100	**REACTOR BUILDING**		

ASI	Description	ACR-700 Unit Data	Units
73110	**REACTOR BUILDING COOLING SYSTEM**		
Equipment		**SG Vault Coolers 7311-LAC1 to LAC 8**	
	Type	air/water heat exchanger	
	Quantity	8	
	Fluid	air (normal) / air+steam (accident)	
	Cooling Capacity (per unit)	Normal (RCW) = 417	kW
	Air Flow (per unit)	25 (normal)	m^3/s
	Cooling Fluid	light water/chilled water	
	Cooling Water Flow Rate	29	L/s
	Design Pressure	TBD kPa (housing and fans); 1.2 MPa(g) for cooling coils	kPa(g)
	Design Temperature	170	°C
	Motor Type	3-phase squirrel cage induction motor	
	Power Supply	Class III	
	Applicable Code	CSA N285.0 Class 6 (or ASME equivalent)	
Equipment		**7311-LAC9 to -LAC12**	
	Type	air/water heat exchanger	
	Quantity	4	
	Fluid	air (normal)	
	Cooling Capacity (per unit)	175 (normal)	kW
	Air Flow (normal)	Normal = 24	m^3/s
	Cooling Fluid	light water	
	Cooling Water Flow Rate	12.3	L/s
	Design Pressure	1.2 MPa(g) for cooling coils	kPa(g)
	Design Temperature	170	°C
	Motor Type	3-phase squirrel cage induction motor	
	Power Supply	Class III	
	Applicable Code	CSA N285.0 Class 6 (or ASME equivalent)	
Equipment		**Local Air Coolers 13 to LACS 18 (Moderator LACs)**	
	Type	air/water heat exchanger	
	Quantity	6	
	Fluid	air	

ASI	Description	ACR-700 Unit Data	Units
	Cooling Capacity	35.5	kW
	Air Flow	4.65	m^3/s
	Cooling Fluid	light water	
	Cooling Water Flow Rate	2.51	kg/s
	Design Pressure	1.2 MPa(g) for cooling coils	
	Design Temperature	50	
	Motor Type	3-phase squirrel cage induction motor	
	Power Supply	Class IV	
	Applicable Code	CSA N285.0 Class 6	
		(or ASME equivalent)	
Equipment		**7311-LAC19 to LAC 35**	
	Type	air/water heat exchanger	
	Quantity	17	
	Fluid	air	
	Cooling Fluid	chilled water	
	Design Pressure	0.7 MPa(g) for cooling coils	MPa(g)
	Design Temperature	40	°C
	Motor Type	3-phase squirrel cage induction motor	
	Power Supply	Class IV	
	Applicable Code	CSA N285.0 Class 6	
		(or ASME equivalent)	
73120	**REACTOR BUILDING VENTILATION SYSTEM**		
	Ventilation Rate	2 air changes per hour in accessible areas	
	Air Flow Rate	17000	m^3/h
73122	**FANS**		
	7312-F1 and 7312-F2		
	Name	**Ventilation Exhaust Fans**	
	Quantity	2	
	Type	Centrifugal, variable inlet vanes	
	Duty	Continuous with one on standby	
	Capacity	100	%
	Fan Data:		
	Fluid	Air	
	Flow Rate	17000	m^3/h

ASI	Description	ACR-700 Unit Data	Units
	Motor Data:		
	Power Supply	Class III	
	Material	Carbon Steel	
73125	**FILTERS**		
	7312-FR1		
	Name	**Ventilation Exhaust Filters**	
	Quantity	1	
	Type	Prefilter, absolute HEPA filter, charcoal absorber and absolute HEPA filter in an enclosure	
	Design Conditions:		
	Flow Rate	17000	m^3/h
	Efficiency	99.97% DOP test removal efficiency of 0.3 micron particle size 99.99% elemental radio-iodine removal efficiency at 70% relative humidity, 97% of organic radioactive iodine	
(BSI 73126)	**AIR CONDITIONING UNIT**		
	7312-ACU1		
	Name	Air Conditioning Unit	
	Quantity	1	
	Type	Pre-filter, fine filter, cooling coil, heating coil	
	Capacity	17000	m^3/h
	Efficiency	99.9% removal of 5 micron particles	
79000	**RADIOACTIVE WASTE MANAGEMENT**		
79100	**SOLID WASTES**		
79140	**SPENT RESIN HANDLING SYSTEM**		
Equipment	**7914-TK1 and TK2 Non-moderator Spent Resin Tanks**	**Tanks**	
	Design Pressure	1.0	MPa(g)
	Design Temperature	40	°C
	Storage Volume, Each	22.5	m^3
	Time to Fill One Vault	5 reactor years or longer	
	Material	Steel Lined Concrete	

ASI	Description	ACR-700 Unit Data	Units
	Applicable Code	CSA N285.0 Class 6 (or ASME equivalent)	
Equipment	**7914-TK3 and -TK4**	**Tanks**	
	Design Pressure	1	MPa(g)
	Design Temperature	40	°C
	Storage Volume, Each	3	m^3
	Material	Steel Lined Concrete	
	Time to Fill	5	yrs
Equipment	**7914-P1 and P2**	**Pump**	
	Type	Centrifugal	
	Quantity	2	
	Capacity	4	L/s
	Head	18 m	m
	Design Pressure	1.0	MPa(g)
	Design Temperature	40	°C
	Applicable Code	CSA N285.0 Class 6 (or ASME equivalent)	
79200	**LIQUID WASTES**		
79210	**LIQUID WASTES SYSTEM**		
Equipment	**7921-P1 to P6**	**Liquid Waste Tank Pumps**	
	Type	Centrifugal	
	Quantity	6	
	Flow Rate	9	L/s
	Head	21	m
	Design Pressure	1130	kPa(a)
	Materials in Contact with fluid	Carbon steel	
	Applicable Code	CSA N285.0 Class 6	
		(or ASME equivalent)	
Equipment	**7921-P7**	**Filter/Ion Exchanger Pump**	
	Type	Centrifugal	
	Quantity	1	
	Flow Rate	4	L/s
	Materials in Contact with fluid	Carbon steel	
	Applicable Code	CSA N285.0 Class 6	
		(or ASME equivalent)	
Equipment	**7921-TK1 to TK6**	**Liquid Waste Tanks**	
	Volume, each	35	m^3
	Quantity	6	
	Design Temperature	65	°C

ASI	Description	ACR-700 Unit Data	Units
	Material	Fibreglass epoxy-lined reinforced concrete	
Equipment	**7921-FR1**	**Filter**	
	Type	Multiple Cartridge Disposable filter elements	
	Quantity	1	
	Retention Sizes	3 microns	
	Flow Rate	4.55	L/s
	Design Pressure	0.70	MPa(g)
	Design Temperature	60	°C
	Material	Type 304 Stainless steel	
	Applicable Code	CSA N285.0 Class 6 (or ASME equivalent)	
Equipment	**7921-IX1 and IX2**	**ION EXCHANGERS**	
	Quantity	2	
	Capacity	0.52	m^3
	Resin Capacity	0.48	m^3
	Design Pressure	0.70	MPa(g)
	Design Temperature	60	°C
	Flow Rate	4.55	L/s
	Applicable Code	CSA N285.0 Class 6 (or ASME equivalent)	