APPENDIX A

SSES

ODCM/TRM

Radioactive Effluent Release Report

2003 Annual Report

PPL Susquehanna, LLC

SSES MANUAL

Manual Name: ODCMANUAL

Manual Title: OFFSITE DOSE CALCULATION MANUAL

Table Of Contents

Issue Date: 01/28/2004

Procedure Name	Rev	Issue Date	Change ID	Change Number
ODCM-QA-001	1	04/15/2002		
Title: ODCM INTRODUCTION				
			PCAF	2003-1240
ODCM-QA-002	2	04/04/2003		
Title: ODCM REVIEW AND REVISION CONTROL				
ODCM-QA-003	3	01/28/2004		
Title: EFFLUENT MONITOR SETPOINTS				
ODCM-QA-004	3	01/28/2004		
Title: AIRBORNE EFFLUENT DOSE CALCULATIONS				
ODCM-QA-005	2	09/20/2002		
Title: WATERBORNE EFFLUENT DOSE CALCULATIONS				
			PCAF	2003-1238
ODCM-QA-006	1	09/20/2002		
Title: TOTAL DOSE CALCULATIONS				
			PCAF	2003-1237
ODCM-QA-007	1	09/20/2002		
Title: RADIOACTIVE WASTE TREATMENT SYSTEMS				
			PCAF	2003-1236
			PCAF	2003-1304
ODCM-QA-008	5	01/28/2004		
Title: RADIOLOGICAL ENVIRONMENTAL MONITORING PROGRAM				
ODCM-QA-009	2	03/18/2003		
Title: DOSE ASSESSMENT POLICY STATEMENTS				

CONTROLLED

PROCEDURE CHANGE PROCESS FORM

1. PCAF NO. 2003- 7240	2. PAGE 1 OF 6	3. PROC. NO. ODCM-QA-001 REV. 1

4. FORMS REVISED - ___ R___ , - ___ R___ , - ___ R___ , - ___ R___ , - ___ R___ , - ___ R___

5. PROCEDURE TITLE
ODCM INTRODUCTION

6. REQUESTED CHANGE

PERIODIC REVIEW ☒ NO ☐ YES

INCORPORATE PCAFS ☐ NO ☒ YES # 2002-1699 # _____ # _____ # _____

REVISION ☐ PCAF ☒ DELETION ☐ (CHECK ONE ONLY)

7. SUMMARY OF / REASON FOR CHANGE

The change being made is the addition of the Nuclear Emergency Planning group to the "RECOMMENDED REVIEWS" section on the procedure cover page.

This change to ODCM-QA-001 is an administrative correction and does not decrease the level of effluent control or the accuracy and/or reliability of dose calculations or setpoint determinations as required by 10CFR20.1302, 40CFR190, 10CFR50.36a and 10CFR50 App. I.

Continued ☐

8. DETERMINE COMMITTEE REVIEW REQUIREMENTS
(Refer to Section 6.1.4)
PORC REVIEW REQ'D? ☒ NO ☐ YES

9. PORC MTG# N/A

BLOCKS 11 THRU 16 ARE ON PAGE 2 OF FORM

17. Francis J. Hickey / 1141 / 3/24/03
PREPARER (Print or Type) / ETN / DATE

18. COMMUNICATION OF CHANGE REQUIRED?
☒ NO ☐ YES (TYPE) _____

19. Raymond E. Diehl 3/24/03
RESPONSIBLE SUPERVISOR / DATE

SIGNATURE ATTESTS THAT RESPONSIBLE SUPERVISOR HAS CONDUCTED QADR AND TECHNICAL REVIEW UNLESS OTHERWISE DOCUMENTED IN BLOCK 16 OR ATTACHED REVIEW FORMS. CROSS DISCIPLINE REVIEW (IF REQUIRED) HAS BEEN COMPLETED BY SIGNATURE IN BLOCK 16 OR ATTACHED REVIEW FORMS.

20. N/A
FUM APPROVAL / DATE

21. RESPONSIBLE APPROVER
ENTER N/A IF FUM HAS APPROVAL AUTHORITY

N/A
INITIALS / DATE

RECEIVED
MAR 25 2003
DOCUMENT CONTROL SERVICES - SSES

PROCEDURE CHANGE PROCESS FORM

1. PCAF NO. 2003- 7240	2. PAGE 2 OF 6	3. PROC. NO. ODCM-QA-001 REV. 1

11. This question documents the outcome of the 50.59 and 72.48 Review required by NDAP-QA-0726. Either 11a, b, c or d must be checked "YES" and the appropriate form attached or referenced.

a. This change is an Administrative Correction for which 50.59 and 72.48 are not applicable.	☒ YES	☒ N/A
b. This change is a change to any surveillance, maintenance or administrative procedure for which 50.59 and 72.48 are not applicable.	☐ YES	☒ N/A
c. This change is bounded by a 50.59/72.48 Screen/Evaluation, therefore, no new 50.59/72.48 Evaluation is required. Screen/Evaluation No. _____	☐ YES	☒ N/A
d. 50.59 and/or 72.48 are applicable to this change and a 50.59/72.48 Screen/Evaluation is attached.	☐ YES	☒ N/A
12. This change is consistent with the FSAR or an FSAR change is required. Change Request No. _____	☒ YES	
13. Should this change be reviewed for potential effects on Training Needs or Material? If YES, enter an Action Item @ NIMS/Action/Gen Work Mech/PICN	☐ YES	☒ NO
14. Is a Surveillance Procedure Review Checklist required per NDAP-QA-0722?	☐ YES	☒ NO
15. Is a Special, Infrequent or Complex Test/Evolution Analysis Form required per NDAP-QA-0320? (SICT/E form does not need to be attached.)	☐ YES	☒ NO

16. Reviews may be documented below or by attaching Document Review Forms NDAP-QA-0101-1.

REVIEW	REVIEWED BY WITH NO COMMENTS	DATE
QADR		
TECHNICAL REVIEW		
REACTOR ENGINEERING/NUCLEAR FUELS *		
IST **		
OPERATIONS		
NUCLEAR SYSTEMS ENGINEERING		
NUCLEAR MODIFICATIONS		
MAINTENANCE		
HEALTH PHYSICS		
NUCLEAR TECHNOLOGY		
CHEMISTRY		
OTHER _____		

* Required for changes that affect, or have potential for affecting core reactivity, nuclear fuel, core power level indication or impact the thermal power heat balance. ([58])

** Required for changes to Section XI Inservice Test Acceptance Criteria.

PROCEDURE COVER SHEET

PPL SUSQUEHANNA, LLC	NUCLEAR DEPARTMENT PROCEDURE	
ODCM INTRODUCTION		ODCM-QA-001 Revision 1 Page 1 of 15

QUALITY CLASSIFICATION:	APPROVAL CLASSIFICATION:
☒ QA Program ☐ Non-QA Program	☒ Plant ☐ Non-Plant ☐ Instruction

EFFECTIVE DATE: 4-15-2002

PERIODIC REVIEW FREQUENCY: N/A

PERIODIC REVIEW DUE DATE: N/A

RECOMMENDED REVIEWS:

Nuclear Emergency Planning

PCAF

Procedure Owner: Francis J. Hickey

Responsible Supervisor: Chemistry Support Supervisor-SSES

Responsible FUM: Chemistry Supervisor-SSES

Responsible Approver: Vice President-Nuclear Operations

PCAF

PROCEDURE REVISION SUMMARY

TITLE: ODCM INTRODUCTION

The revisions described below are clarification adding detail and editorial in nature and do not change any limits or analyses. Thus, Revision 1 of ODCM-QA-001 maintains the level of radioactive effluent control required pursuant to 10CFR20.1302, 40CFR190, 10CFR50.36a and Appendix I to 10CFR50 and does not impact the accuracy or reliability of effluent, dose, or setpoint calculations.

In addition, these changes (1) do not alter the conduct of the radiological environmental monitoring program, (2) do not change the radioactive effluent controls and radiological environmental monitoring activities, and (3) do not change the information to be included in the Annual Radiological Environmental Operating and Radioactive Effluent Release Reports.

1. Removal of gray shading from ITS Implementation (NIMS 381803).
2. Added responsibilities for Supervisor – Environmental Services (Section 4.9) (NIMS 381805).
3. Revised Attachment A as to content details for AE&WD Report (NIMS 381805).
4. Added Attachment B to include content for AREOR (NIMS 381805).
5. Deleted Reference 3.4, NDAP-QA-0152 as it no longer exists.
6. Updated position titles and minor word changes in Section 4.0.
7. Sections 2.1 and 2.4 minor wording changes.
8. Reference change for Section 5.1.

TABLE OF CONTENTS

SECTION		PAGE
1.0	PURPOSE	4
2.0	POLICY/DISCUSSION	4
2.1	Derived Release Concentrations and Dose Rates	4
2.2	Radioactive Effluent Control Program (RECP)	4
2.3	Annual Effluent and Waste Disposal Report	4
2.4	Annual Radiological Environmental Operating Report	5
2.5	Special Reports	5
3.0	REFERENCES	5
4.0	RESPONSIBILITIES	6
4.1	Vice President - Nuclear Operations	6
4.2	General Manager - Nuclear Engineering	6
4.3	General Manager - Nuclear Assurance	6
4.4	Chemistry Supervisor - SSES	6
4.5	Manager - Regulatory Affairs	6
4.6	Chemistry Support Personnel	6
4.7	Chemistry Support Supervisor - SSES	7
5.0	DEFINITIONS	7
6.0	PROCEDURE	7
6.1	Organization	7
7.0	RECORDS	9

ATTACHMENT		PAGE
A	Contents of Annual Effluent and Waste Disposal Report	10
B	Contents of Annual Radiological Environmental Operating Report	15

PCAF

1.0 PURPOSE

The purpose of this procedure is to describe the overall purpose and organization of the SSES Offsite Dose Calculation Manual (ODCM).

2.0 POLICY/DISCUSSION

The purpose of the ODCM is to provide the parameters and methodology to be used in calculating offsite doses and effluent monitoring setpoints for the Susquehanna Steam Electric Station, Units 1 and 2. The ODCM contains the requirements of the Radiological Effluent Control Program (RECP) as described in Section 2.2 and the Radiological Environmental Monitoring Program (REMP) as defined in TR 3.11.4. Remedial actions to be taken when program limits (TROs) are exceeded are specified in the Technical Requirements Manual (TRM). The ODCM includes methods for determining maximum individual, whole body, and organ doses due to waterborne and airborne effluents to ensure compliance with the dose limitations in the Technical Requirements (TR). Methods are also included for performing dose calculations to ensure compliance with the waterborne and airborne treatment system operability sections of the Technical Requirements. This manual includes the required inputs for inclusion in the Annual Effluent and Waste Disposal Report and the Annual Radiological Environmental Operating Report.

2.1 Derived Release Concentrations and Dose Rates

The ODCM uses 10 times the concentrations of Appendix B, Table 2, Column 2 of 10CFR20.1001-20.2402 as concentration limits for liquid releases and the instantaneous release rates which are no longer referenced in 10CFR20 but come directly from TR 3.11.2 for gaseous releases as confirmed in the 6/93 NRC response to NUMARC.

2.2 Radioactive Effluent Control Program (RECP)

The Radioactive Effluent Control Program (RECP) is a comprehensive program as detailed in TS 5.5.4 which provides control of radioactive effluent for maintaining the dose to members of the public from radioactive effluent as low as reasonably achievable. The RECP is defined in TR's 3.6.1, 3.11.1, 3.11.2, and 3.11.3.

2.3 Annual Effluent and Waste Disposal Report

The radioactive effluent release report is titled, "Annual Effluent and Waste Disposal Report."

It covers the operation of the station during the previous year and must be submitted prior to May 1 of each year in accordance with TS 5.6.3. The report is prepared in accordance with Procedure ST-099-002 and the required topics for the report are provided in Attachment A.

2.4 Annual Radiological Environmental Operating Report

This report, submitted prior to May 15 of each year, contains the summaries, interpretations and analyses of the results of the Radiological Environmental Monitoring Program for the previous year as spelled out in ODCM-QA-008 and the required topics for the report are provided in Attachment B.

2.5 Special Reports

These reports are required to be submitted to the NRC when the limits of TR's 3.11.1.2, 3.11.1.3, 3.11.2.2, 3.11.2.3, 3.11.2.4, 3.11.2.5, 3.11.3, and 3.11.4.1 (Condition B, C, or D) are exceeded. Special reports shall be submitted within 30 days and shall address the actions required in the TRM.

3.0 REFERENCES

3.1 TS 5.5.1, Offsite Dose Calculation Manual (ODCM)

3.2 TS 5.5.4, Radioactive Effluent Control Program

3.3 TR 2.1.1, ODCM

3.4 TR 2.1.4, Radioactive Effluent Controls

3.5 TR 3.6.1, Containment Venting or Purging

3.6 TR 3.11, Radioactive Effluents

3.7 ST-099-002, Radioactive Effluent Release Report

3.8 10CFR20 Appendix B, Annual Limits on Intake and Derived Air Concentrations of Radionuclides for Occupational Exposure; Effluent Concentrations; Concentrations for Release to Sewerage

3.9 NDAP-QA-0646, Solid Radioactive Process Control Program

3.10 Letter from T. Murley, Director, Office of Nuclear Reactor Regulations, to T. Tipton, Vice President and Director of Operations, NUMARC, 6/93

3.11 NDAP-QA-1180, Radiological Effluent Monitoring and Control

3.12 NDAP-00-1203, Process for Major Project Identification, Scoping and Long-Range Planning

4.0 RESPONSIBILITIES

4.1 Vice President – Nuclear Operations

PCAF

4.1.1 Ensures that the ODCM is used in performance of the surveillance requirements and for compliance with the TROs stated in the TRM relative to radioactive effluent.

4.1.2 Approves revisions to the ODCM.

4.2 General Manager - Nuclear Engineering

PCAF

4.2.1 Provides modification engineering and support in accordance with NDAP-00-1203 for equipment and systems involved with the conduct of the effluent and environmental monitoring programs at SSES.

4.3 General Manager - Nuclear Assurance

PCAF

4.3.1 Periodically assesses the SSES effluent, environmental and meteorological programs for compliance with the requirements of the TRM and the ODCM.

4.4 Chemistry Supervisor - SSES

4.4.1 Ensures the adequacy and correctness of methodologies described in the ODCM.

4.4.2 Is responsible for reviewing revisions to the ODCM.

4.4.3 Approves both the Annual Effluent and Waste Disposal and the Annual Radiological Environmental Operating Reports submitted to the NRC.

4.4.4 Manages the programs for the assessment of the radiological environmental impact of SSES.

PCAF

4.5 Manager – Regulatory Affairs

4.5.1 Submits the required radiological effluent and environmental reports to the NRC.

4.5.2 Notifies the appropriate groups of NRC licensing requirements.

4.6 Chemistry Support Personnel

4.6.1 Develops methodologies used in performance of effluent dose calculations and establishment of setpoints.

4.6.2 Performs dose calculations necessary for fulfillment of SSES Technical Requirements Surveillance.

4.6.3 Prepares and submits the Annual Effluent and Waste Disposal Report to Regulatory Affairs for submittal to the NRC.

4.6.4 Prepares and submits the Annual Radiological Environmental Operating Report to Regulatory Affairs for submittal to the NRC.

P
C
A
F

4.7 Chemistry Support Supervisor – SSES

4.7.1 Reviews Annual Effluent and Waste Disposal Report and Annual Radiological Environmental Operating Report to assure adequacy of content in accordance with Attachments A and B, respectively,

4.7.2 Ensures development of appropriate revisions to the ODCM.

5.0 DEFINITIONS

5.1 ECL - Effluent Concentration Limit as defined by TRO 3.11.1.1.

5.2 Site Boundary - Is that line beyond which the land is not owned, leased or otherwise controlled by the licensee. (PPL Drawing C243786, SH1, Rev. 1, "U-1&2 Site Facilities and Boundary Map.")

5.3 Unrestricted Area - The area at or beyond the site boundary access to which is neither limited nor controlled by the licensee for purposes of protection of individuals from exposure to radiation and radioactive materials, or any area within the site boundary used for residential quarters or for industrial, commercial, institutional and/or recreational purposes.

6.0 PROCEDURE

6.1 Organization

Chemistry Department - SSES shall develop and maintain a set of procedures as described in the following subsections.

P
C
A
F

6.1.1 ODCM-QA-001 - ODCM Introduction

This procedure describes the overall purpose and organization of the ODCM.

6.1.2 ODCM-QA-002 - ODCM Review and Revision Control

This procedure describes the initiation, review and processing of revisions to the ODCM and establishes responsibility for the ODCM.

6.1.3 ODCM-QA-003 - Effluent Monitor Setpoints

This procedure describes the policies pertaining to and the methodology used in establishing effluent monitor setpoints.

6.1.4 ODCM-QA-004 - Airborne Effluent Dose Calculations

This procedure provides the methodology and parameters used in calculating air dose resulting from noble gas effluent and maximum individual, whole body, and organ doses due to airborne effluents to ensure compliance with the dose limitations in the Technical Requirements Manual.

6.1.5 ODCM-QA-005 - Waterborne Effluent Dose Calculations

This procedure provides the methodology and parameters to be used in calculating maximum individual, whole body, and organ doses due to waterborne effluents to ensure compliance with the dose limitations in the Technical Requirements Manual.

6.1.6 ODCM-QA-006 - Total Dose Calculations

This procedure provides the methodology and parameters to determine the total dose to a member of the public from the fuel cycle in the vicinity of the SSES site.

6.1.7 ODCM-QA-007 - Radioactive Waste Treatment Systems

This procedure defines the operability requirements of the radioactive waste treatment systems and monitoring instruments. It also includes reporting requirements where changes are made to systems or when operability is not maintained in accordance with the TRM.

6.1.8 ODCM-QA-008 - Radiological Environmental Monitoring Program

This procedure provides the methodology and parameters used to determine doses to the public resulting from inhalation, ingestion, and direct shine from radiologically contaminated environmental sampling media based on measured activity concentrations in those media. This procedure also describes the Radiological Environmental Monitoring Program (REMP), which includes the annual land use census survey and interlaboratory comparison program.

6.1.9 ODCM-QA-009 - Dose Assessment Policy Statements

The purpose of this procedure is to state dose and effluent policy statements that are not directly associated with any other section of the ODCM.

7.0 RECORDS

Except for ODCM-QA-002, no records are specified by the ODCM. Records are generated in performance of other procedures that use the information contained in the ODCM. Control of these records is specified in the controlling procedures.

CONTENTS OF
ANNUAL EFFLUENT AND WASTE DISPOSAL REPORT
(Note: All data and information is referenced to RG 1.21 unless otherwise noted.)

General

- Provide an estimate of total error associated with the measurement of radioactivity combining errors with sampling and measuring.
- Values stated using three significant figures.
- Values stated using external floating point form using "E" to denote exponent to the base 10.
- The term "not detected" should not be used.
- Annual report for previous year to be submitted prior to May 1 of each year (TS 5.6.3).
- A single submittal may be made for both SSES units (TS 5.6.3).
- ODCM shall be submitted to the NRC in the format of a complete legible copy of the entire ODCM for the period of the report in which any change in the ODCM was made. Each change shall be identified by markings in the margin of the affected pages clearly indicating the area of the page that was changed, and shall indicate the date (i.e., month and year) the change was implemented (TS 5.5.1.C.3).
- Liquid Radwaste Effluent Monitoring Instrumentation inoperability not corrected in a timely manner (TRM Action 3.11.1.4.F.2).
- Radioactive Liquid Process Monitoring Instrumentation (Table 3.11.1.5-1) inoperability not corrected in a timely manner (TRM Action 3.11.1.5.C.1).
- Explanation for Radioactive Gaseous Effluent Monitoring Instrumentation required actions and completion times not met (TRM Action 3.11.2.6.K).
- Land use census identifies a new location which yields a calculated dose or dose commitment greater than the values currently being calculated (TRM Action 3.11.4.2.A).
- Land use census identifies a location(s) that yields a calculated date or dose commitment (via the same exposure pathway) 20 percent greater than at a location from which samples are currently being obtained (TRM Action 3.11.4.2.B).
- Identify the cause of the availability of milk or fresh leafy vegetable samples and identify the new location(s) for obtaining replacements (TRM Action 3.11.4.1.F.2).

Liquid Effluent

1. Mixed Fission and Activation Products

   Quarterly sums of total curies of radioactive material determined to be released in liquid effluents (not including tritium, dissolved and entrained gases, and alpha-emitting material). (See Table 2A.)

   - Average concentrations (µCi/ml) of mixed fission and activation products (C.1.a above) released to unrestricted areas, averaged over the quarterly periods covered by the report.
   - Percent of applicable limit of average concentrations released to unrestricted areas (C.1.b above). Include the limit used and the bases in the supplemental report information.
   - Quarterly sums of total curies for each of the radionuclides determined to be released in liquid effluents based on analyses performed. Data should be separated by type of release mode, i.e., continuous or batch. (See Table 2B.)

2. Tritium

   - Quarterly sums of total curies of tritium determined to be released in liquid effluents.
   - Average concentrations (µCi/ml) of tritium released in liquid effluents to unrestricted areas, averaged over the quarterly periods covered by the report.
   - Percent of applicable limit of average concentrations released to unrestricted areas (C.2.b above), i.e., percent 3×10^{-3} µCi/ml. Include the limit and the bases in the supplemental report information.

3. Dissolved and Entrained Gases

   - Quarterly sums of total curies of gaseous radioactive material determined to be released in liquid effluents.
   - Average concentrations (µCi/ml) of dissolved and entrained gaseous radioactive material released to unrestricted areas averaged over the quarterly periods covered by the report.
   - Percent of limit of average concentrations released to unrestricted areas. Include the limit used and the bases in the supplemental report information.
   - Quarterly sums of total curies for each of the radionuclides determined to be released as dissolved and entrained gases in liquid effluents.

4. Alpha Radioactivity

- Quarterly sums of total curies of gross alpha-emitting material determined to be released in liquid effluents.

5. Volumes

- Quarterly sums, in liters, of total measured volume, prior to dilution, of liquid effluent released.
- Quarterly sums of total determined volume, in liters, of dilution water used during the period of the report.

6. Stream Flow

- Data on the average flow of the stream during periods of effluent release should be collected and reported in the Supplemental Information section of the report.

Gaseous Effluent

1. Gases

- Quarterly sums of total curies of fission and activation gases released.
- Average release rates (µCi/sec) of fission and activation gases for the quarterly periods covered by the report.
- Percent of limit for releases of fission and activation gases.
- Quarterly sums of total curies for each of the radionuclides determined to be released based on analyses of fission and activation gases. The data should be categorized by: (1) elevated releases, batch and continuous modes, and (2) ground-level releases, batch and continuous modes.

2. Iodines

- Quarterly sums of total curies of iodine-131 and iodine–133 released.
- Average release rate (µCi/sec) of iodine-131 and iodine-133.
- Percent of limit for iodine-131 and iodine-133.
- Quarterly sums of total curies of each of the isotopes, iodine-131, iodine-133, and iodine-135 determined to be released.

3. Particulates

Quarterly sums of total curies of radioactive material in particulate form with half-lives greater than eight days determined to be released.

- Average release rate (μCi/sec) of radioactive material in particulate form with half-lives greater than eight days.
- Percent of limit for radioactive material in particulate form with half-lives greater than eight days.
- Quarterly sums of total curies for each of the radionuclides in particulate form determined to be released based on analyses performed.
- Quarterly sums of total curies of gross alpha radioactivity determined to be released.

4. Tritium

- Quarterly sums of total curies of tritium determined to be released in gaseous effluents.
- Average release rate (μCi/sec) of tritium.
- Percent of appropriate limits for tritium.

5. The Gaseous Effluent Table (RG Table 1.C) should list nuclides even if the total is reported as zero (NIMS 281707).

6. Detectable airborne radioactivity in the Low Level Radwaste Holding Facility (FSAR 11.6.11).

Solid Radwaste (SRW)

- Total curie quantity and radionuclide composition for solid waste shipped for burial or disposal.
- Total SRW volume in cubic meters.
- Total SRW radioactivity in curies for the categories of waste specified (a) spent resins, filter sludges, evaporator bottoms, etc., (b) dry compressible waste, contaminated equipment, etc., (c) irradiated components, control rods, etc., (d) other (describe) as applicable. [Note: Our reporting typically breaks these categories into more detail.]
- Estimate of the major nuclide composition in each category of SRW.

- The disposition of SRW shipments (number of shipments, mode of transport and destination). [Note: This involves shipments that lead to burial or disposal during the year. It does not include shipments for processing.]

- The disposition of irradiated fuel shipments (number of shipments, mode of transport and destination).

- Licensee initiated changes to the Process Control Program to include detailed information to support rationale for changes, change did not reduce the overall conformance of the solidification waste product to existing criterion for solid radwaste, changes reviewed and recommended for approval by PORC. (FSAR 13.4.4.1)

Meteorological Data

- Cumulative joint frequency distribution of wind speed, wind direction and atmospheric stability.

Radiological Impact on Man

- Total body and significant organ doses to individuals in unrestricted areas from receiving water-related exposure pathways.

- Total body and skin doses to individuals exposed at the point of maximum offsite ground-level concentrations of radioactive materials in gaseous effluents.

- Organ doses to individuals in unrestricted areas from radioactive iodines and radioactive material in particulate form from all pathways of exposure.

- Total body doses to individuals in unrestricted areas from direct radiation from the facility.

- Calculated doses to members of the public within the Riverlands/Information Center Complex.

Supplemental Information

- (Per RG 1.21, Page 1.21-13)

Standards for Normal Operation

- (Per 40 CFR 190.10)

CONTENTS OF
ANNUAL RADIOLOGICAL ENVIRONMENTAL OPERATING REPORT

- REMP Summary Description (TS 5.6.2)
- Sampling Location Maps and Tables with Distances and Directions from SSES (TRS 3.11.4.1.1)
- Tables of all Detectable Primary Analysis Results and Radiation Measurements (TRS 3.11.4.1.2 and TS 5.6.2)
- Tables with a Statistical Summary of Analysis Results (TS 5.6.2)
- Data Interpretation (TS 5.6.2)
- Comparison of Indicator Location Data with Other Periods and Controls (TS 5.6.2)
- Trend Analyses for Detectable Results (TS 5.6.2)
- Dose Evaluation with Environmental Impact Assessment (TRS 3.11.4.1.3)
- Interlaboratory Comparison Results (TRS 3.11.4.3.1)
- Deviations from Sampling/Analysis Requirements (TRM 3.11.4.1.A)
- Non-SSES Radionuclide Activities Detected (TRM 3.11.4.1.E)
- Explanation of Unavailable Monitoring Results (TS 5.6.2)

PROCEDURE COVER SHEET

PPL SUSQUEHANNA, LLC	NUCLEAR DEPARTMENT PROCEDURE	
ODCM REVIEW AND REVISION CONTROL		ODCM-QA-002 Revision 2 Page 1 of 8

QUALITY CLASSIFICATION:	APPROVAL CLASSIFICATION:
☒ QA Program ☐ Non-QA Program	☒ Plant ☐ Non-Plant ☐ Instruction

EFFECTIVE DATE: 4-4-2003

PERIODIC REVIEW FREQUENCY: N/A

PERIODIC REVIEW DUE DATE: N/A

RECOMMENDED REVIEWS:

Nuclear Emergency Planning

Procedure Owner: Francis J. Hickey

Responsible Supervisor: Chemistry Support Supervisor-SSES

Responsible FUM: Chemistry Supervisor-SSES

Responsible Approver: Vice President-Nuclear Operations

PROCEDURE REVISION SUMMARY

TITLE: ODCM REVIEW AND REVISION CONTROL

1. Change responsibilities to recognize various Chemistry personnel due to PPL Susquehanna, LLC re-organization.

2. Add Nuclear Emergency Planning to 'Recommended' Reviews' section on cover page.

The above changes to ODCM-QA-002 have been evaluated as to not decrease the level of effluent control or the accuracy and/or reliability of dose calculations or setpoint determinations as required by 10CFR20.1302, 40CFR190, 10CFR50.36a and 10CFR50, App. I.

In addition, these changes(1) do not alter the conduct of the radiological environmental monitoring program, (2) do not change the radioactive effluent controls and radiological environmental monitoring activities, and(3) do not change the information to be included in the Annual Radiological Environmental Operating and Radioactive Effluent Release Reports.

TABLE OF CONTENTS

SECTION		PAGE
1.0	PURPOSE	4
2.0	POLICY/DISCUSSION	4
3.0	REFERENCES	4
4.0	RESPONSIBILITIES	5
4.1	Vice President - Nuclear Operations	5
4.2	Chemistry Supervisor - SSES	5
4.3	Chemistry Support Supervisor - SSES	5
4.4	Chemistry Support Personnel	5
4.5	All Personnel	5
5.0	DEFINITIONS	6
6.0	PROCEDURE	6
7.0	RECORDS	7

ATTACHMENTS

ATTACHMENT		PAGE
A	SSES ODCM CHANGE REQUEST (FORM ODCM-QA-002-1)	8

1.0 PURPOSE

The purpose of this procedure is to describe the initiation, review, and processing of revisions to the ODCM and to establish responsibility for the ODCM.

This procedure constitutes part of the SSES Offsite Dose Calculation Manual (ODCM), which is a licensing basis document.

2.0 POLICY/DISCUSSION

2.1 The ODCM is part of the Licensing Basis of SSES and is controlled by ITS 5.5.1, Offsite Dose Calculation Manual (ODCM).

2.2 The ODCM procedures are controlled as Plant Functional Unit Procedures in accordance with the requirements of NDAP-QA-0002, with the following additional guidance and controls:

2.2.1 ODCM procedures shall be numbered as follows: ODCM-QA-nnn, where nnn is a sequential number starting with 001.

2.2.2 ODCM procedures shall be reviewed and accepted by the Chemistry Supervisor - SSES prior to PORC review.

2.2.3 ODCM procedures shall be approved by the Vice President – Nuclear Operations.

2.2.4 Changes to the procedures comprising the ODCM require PORC review prior to approval. Changes which are solely administrative corrections or an expedited review revision do not require PORC approval. PORC review will be indicated by recording the PORC meeting number on the Procedure Change Process Form (NDAP-QA-0002-8).

2.2.5 ODCM procedures shall be issued and controlled by Nuclear Records Document Control Services (NR-DCS) in accordance with NR procedures. The distribution list shall be maintained by DCS.

2.3 Changes to the Radioactive Effluent Control Program (RECP) are controlled in accordance with NDAP-QA-0728, but are reported as changes to the ODCM in the Radioactive Effluent and Waste Disposal Report.

3.0 REFERENCES

3.1 TS 5.5.1, Offsite Dose Calculation Manual (ODCM)

3.2 NDAP-QA-0002, Nuclear Department Procedure Program

3.3 NDAP-QA-0101, Document Review

3.4 Operational Policy Statements, OPS-1-M, Quality Assurance for Radiological Environmental Monitoring, Radioactive Effluents, Meteorology, The Environmental Protection Plan, and The Offsite Dose Calculation Manual

3.5 NDAP-QA-0728, SSES Technical Requirements Program

3.6 10CFR20.1302, Compliance with Dose Limits for Individual Members of the Public

3.7 40CFR190, Environmental Radiation Protection Standards for Nuclear Power Operation

3.8 10CFR50.36a, Technical Specifications on Effluents from Power Reactors

3.9 10CFR50, Appendix I, Numerical Guides for Design Objectives and Limiting Conditions for Operation to Meet "As Low As Is Reasonably Achievable" for Radioactive Material in Light-Water Cooled Nuclear Power Reactors

4.0 RESPONSIBILITIES

4.1 Vice President – Nuclear Operations

4.1.1 Approves revisions to the ODCM.

4.2 Chemistry Supervisor - SSES

4.2.1 Is the Responsible Functional Unit Manager (FUM)

4.3 Chemistry Support Supervisor - SSES

4.3.1 Ensures the adequacy and correctness of methodologies described in the ODCM.

4.3.2 Is responsible for reviewing revisions to the ODCM.

4.4 Chemistry Support Personnel

4.4.1 Maintain the ODCM.

4.4.2 Process revisions to the ODCM.

4.5 All Personnel

4.5.1 Submit comments on ODCM contents and proposed revisions to Chemistry Support Personnel.

5.0 DEFINITIONS

None.

6.0 PROCEDURE

6.1 Personnel shall submit proposed ODCM revisions on the SSES Offsite Dose Calculation Manual Change Request Form ODCM-QA-002-1. The submitter shall complete Sections 1 through 5 according to the directions on the form, including sufficient detail of the revision and technical basis of the change to support the rationale for the change and to enable the Chemistry Support Group to proceed. The submitter should provide at least one-month lead time between the submittal date and the requested implementation date to permit preparation, review by interested parties, and approval of the ODCM revision. Changes tracked by other mechanisms (e.g., Condition Reports and Modifications) do not require use of Form ODCM-QA-002-1.

6.2 Chemistry Support Personnel shall sign and date Form(s) ODCM-QA-002-1 on receipt, and retain the form(s) in a work file created for this ODCM revision. Chemistry Support Personnel may contact the form submitter to discuss the details of the revision.

6.3 Chemistry Support Personnel shall prepare a draft of the ODCM revision based on information in Form(s) ODCM-QA-002-1.

6.3.1 The preparer shall ensure that the change does not reduce the level of effluent control or the accuracy and/or reliability of dose calculations or setpoint determinations as required by 10CFR20.1302, 40CFR190, 10CFR50.36a and 10CFR50, Appendix I.

6.3.2 The preparer shall include a statement to this effect in the Procedure Revision Summary.

6.3.3 If compliance to the criterion in §6.3.1 cannot be demonstrated, the preparer shall make appropriate changes to ensure compliance, else the proposed revision shall be dismissed.

6.3.4 Each change shall be identified by markings in the margin of the affected pages, clearly indicating the area of the page that was changed. The date the change is implemented is indicated on the Procedure Cover sheet.

6.4 Chemistry Support Personnel shall follow the process described in NDAP-QA-0002, Section 7.0, for plant procedures.

6.4.1 All review comments and resolutions shall be documented according to NDAP-QA-0101.

6.4.2 The review shall sustain that the change does not reduce the accuracy or reliability of dose calculations and/or setpoint determinations.

6.5 Chemistry Support Personnel shall schedule the proposed ODCM revision for PORC review in accordance with PORC procedures.

6.6 Chemistry Support Personnel shall present the ODCM revision to PORC, along with originating information (Form(s) ODCM-QA-002-1), review documentation (Form NDAP-QA-0101-1), any technical material (calculations, studies, etc.) necessary to support the ODCM revision, the evaluation required in Section 6.3.1 and appropriate signature approvals.

6.7 Chemistry Support Personnel shall submit to the NRC a complete, legible copy of the revised ODCM in the Annual Effluent and Waste Disposal Report for the period of the report in which any change in the ODCM was made.

7.0 RECORDS

The following shall be submitted to Nuclear Records in accordance with NR procedures:

7.1 Form(s) ODCM-QA-002-1, with attachments, if any.

7.2 Review package, assembled in accordance with the requirements of NDAP-QA-0002 and NDAP-QA-0101.

SSES OFFSITE DOSE CALCULATION MANUAL
CHANGE REQUEST

1. ODCM-QA-___ Submit a separate form for each ODCM procedure to be revised.

2. Describe proposed revisions to the SSES ODCM below. Include references to sections, figures, tables, parameters, and equations with sufficient detail to convey complete and correct information. If necessary, use additional pages. If proposed revision can be more clearly indicated on marked up copy(s) of the current ODCM, then attach these marked up pages to this form.

3. Reason for revision: include references to Condition Reports, Audit Services observations or findings, Licensing Issues, DCPs, etc., as applicable. If necessary, use additional pages.

4. Additional pages attached? No ☐ Yes ☐
   Number of additional pages _____

5. Requested date for implementation of revision: _____

   Requested by: _____ Cost Area: _____ Date _____

To be completed by Chemistry Support
Received by: _____ Date: _____

PROCEDURE COVER SHEET

PPL SUSQUEHANNA, LLC	NUCLEAR DEPARTMENT PROCEDURE	
EFFLUENT MONITOR SETPOINTS		ODCM-QA-003 Revision 3 Page 1 of 14

QUALITY CLASSIFICATION:	APPROVAL CLASSIFICATION:
☒ QA Program ☐ Non-QA Program	☒ Plant ☐ Non-Plant ☐ Instruction

EFFECTIVE DATE: 1-28-2004

PERIODIC REVIEW FREQUENCY: N/A

PERIODIC REVIEW DUE DATE: N/A

RECOMMENDED REVIEWS:

Nuclear Emergency Planning

Procedure Owner: Francis Hickey

Responsible Supervisor: Chemistry Supervisor - SSES

Responsible FUM: Chemistry Supervisor - SSES

Responsible Approver: Vice President – Nuclear Operations

PROCEDURE REVISION SUMMARY

TITLE: EFFLUENT MONITOR SETPOINTS

The changes made do not reduce or compromise the level of effluent control or the accuracy and/or reliability of dose calculations or setpoint determinations as required by 10CFR20.1302, 40CFR190, 10CR50.36a and 10CFR50, Appendix I. Additionally, the changes outlined below (1) do not alter the conduct of the radiological environmental monitoring program, (2) do not change the radioactive effluent controls and radiological environmental monitoring activities, and (3) do not change the information to be included in the Annual Radiological Environmental Operating and Radioactive Effluent Release Reports.

1. Sections 2.3 and 2.4 revised to delete reference's to Iodine and Particulate setpoints.

2. Reference 3.13 deleted and moved to ODCM-QA-004. Reference 3.12 deleted and added reference to EC-ENVR-1042, "Airborne Effluent Dose Conversion Factors used in Chemistry Procedures".

3. Deleted/moved Sections 6.3 and 6.4 to ODCM-QA-004 Airborne Effluent Dose Calculations.

TABLE OF CONTENTS

SECTION	PAGE
1.0 PURPOSE	4
2.0 POLICY/DISCUSSION	4
2.1 ODCM Setpoints are Upper Limit Values	4
2.2 Waterborne Effluent Monitors	4
2.3 Airborne Effluent Monitors	5
2.4 Selection of Data for Determination of Dose Rate Compliance	5
3.0 REFERENCES	6
4.0 RESPONSIBILITIES	7
4.1 Chemistry Supervisor - SSES	7
5.0 DEFINITIONS	7
6.0 PROCEDURE	7
6.1 Liquid Effluent Monitoring	7
6.2 Airborne Effluent Monitoring - Noble Gas	11
7.0 RECORDS	13

ATTACHMENTS	PAGE
A Parameters Used to Determine Airborne Effluent Monitor Setpoints	14

1.0 PURPOSE

This procedure discusses the methodology to be used in determining effluent monitor alarm/trip setpoints to be used to ensure compliance with the concentration and instantaneous release rate limits in the Technical Requirements Manual (Sections 3.11.1.1 and 3.11.2.1) and provides operational flexibility while giving reasonable assurance of meeting the design objectives of 10CFR50, Appendix I.

This procedure constitutes part of the SSES Offsite Dose Calculation Manual which is a licensing basis document.

2.0 POLICY/DISCUSSION

2.1 ODCM Setpoints are Upper Limit Values

2.1.1 Effluent monitor alarm/trip setpoints calculated in accordance with the ODCM shall be considered upper limit values. Higher (less conservative) setpoints shall not be used, however lower (more conservative) setpoints may be used as required to maximize the utility of the monitor.

2.2 Waterborne Effluent Monitors

2.2.1 A gross radioactivity monitor providing automatic termination of liquid effluent releases is present on the liquid radwaste effluent line. Flow rate measurement devices are also present on the liquid radwaste effluent line and the discharge line (cooling tower blowdown).

2.2.2 Precautions, limitations, and setpoints applicable to the operation of the SSES liquid effluent monitors are provided in the applicable plant procedures.

2.2.3 The liquid effluent monitor setpoints are determined in accordance with the methodology and parameters described in Section 6.1 and controlled as "field set" in accordance with applicable plant procedures.

2.2.4 Setpoint values are to be calculated to ensure that alarm and trip actions occur upon approaching 10 times the EC limits of 10 CFR 20, Appendix B, Table 2, Column 2 and 2E-4 μCi/ml for total dissolved gases at the release point to the Unrestricted Area.

2.2.5 Setpoint values for monitors used for leak detection (if set more conservatively than the EC limits) should be based on X times background values provided such values do not result in concentrations greater than the EC limits at the Unrestricted Area. The setpoint is established based on operating experience.

2.3 Airborne Effluent Monitors

2.3.1 Noble gas activity monitors, iodine, and particulate samplers are present on the reactor building ventilation system (Units 1 and 2), the turbine building ventilation system (Units 1 and 2), and the standby gas treatment system exhaust vents. Effluent system flow rate and sampler flow rate are measured on all of the systems allowing the vent monitor microprocessor to calculate release rates based on measured flow rates.

2.3.2 Precautions, limitations, and setpoints applicable to the operation of the SSES airborne effluent monitors are provided in the applicable plant procedures.

2.3.3 Setpoints are conservatively established for each effluent monitor so that the instantaneous dose rates of TRO 3.11.2.1.I will not be exceeded.

2.3.4 The general methodology for establishing plant ventilation airborne effluent monitor setpoints is based upon vent release rates derived from site-specific meteorological dispersion conditions, vent flow rates, and measured or expected radionuclide mixtures in the gaseous effluents. The vent release rate can then be converted to vent concentrations for input as setpoints for the applicable detectors.

2.3.5 The main condenser offgas pre-treatment monitor provides indication of offgas activity prior to input to the holdup system. Alarm setpoints are based on the Technical Specification 3.7.5 noble gas release rate limit of 330 millicuries/second or less at the motive steam jet condenser discharge.

2.3.6 Noble gas activity monitor setpoints are established at release rates which permit some margin for corrective action to be taken before exceeding the offsite instantaneous dose rates of TRO 3.11.2.1.I.

2.4 Selection of Data for Determination of Dose Rate Compliance

2.4.1 Airborne effluent monitor setpoints are maintained in accordance with Section 2.3, to alarm before the dose rate limits of the Technical Requirements Manual TRO 3.11.2.1.I are exceeded. Station alarm response procedures contain instructions for investigation and verification of monitor alarms. Because setpoint calculations must include assumptions about the composition of the monitored effluent, a monitor high alarm does not necessarily indicate that a dose rate limit has been exceeded.

2.4.2 Valid 10-minute or valid 15-minute averaged data should be the primary information used to determine the compliance status of an incident. One-minute averaged data should also be reviewed if available, but they may or may not provide additional information depending on the

magnitude of the release due to the manner in which the monitors update values to be stored and associated statistical considerations. Averages over a longer period should be used only when data with higher resolution is not available. Grab sample analyses should be performed whenever possible to confirm or disprove monitor data, and to provide indication of the nuclide specific composition of the effluent. When grab sample data are available which, based on vent monitor data, are indicative of the period of elevated release, dose rate calculations should be performed using the actual effluent mix. The determination of compliance status should not be based on monitor data alone when it is possible to collect and analyze a vent sample which will be representative of the period of elevated release.

3.0 REFERENCES

3.1 TS 3.7.5, [Radioactive Effluents] Main Condenser

3.2 TR 3.11.1.1, [Radioactive Effluents] [Liquid Effluents] Concentration

3.3 TR 3.11.1.4, Liquid Radwaste Effluent Monitoring Instrumentation

3.4 TR 3.11.1.5, Radioactive Liquid Effluent Monitoring Instrumentation

3.5 TR 3.11.2.1, [Radioactive Effluents] [Gaseous Effluents] Dose Rate

3.6 TR 3.11.2.6, Radioactive Gaseous Effluent Monitoring Instrumentation

3.7 10 CFR 20.1301, Dose limits for individual members of the public

3.8 10 CFR 20 Appendix B, Annual Limits on Intake (ALIs) and Derived Air Concentrations (DACs) of Radionuclides for Occupational Exposure: Effluent Concentrations; Concentrations for Release to Sewerage

3.9 40CFR190, Environmental radiation protection standards for nuclear power operations

3.10 10CFR50 Appendix I, Numerical Guides for Design Objectives and Limiting Conditions for Operation to Meet the Criterion "As Low as is Reasonably Achievable" for Radioactive Material in Light-Water Cooled Nuclear Power Reactor Effluents

3.11 EC-RADN-1041, SSES "Expected" Liquid and Gaseous Effluent Releases, Aquatic Doses, and Atmospheric Doses - Incorporates Condensate Filtration System and Hydrogen Water Chemistry

3.12 The importance of P-32 in Nuclear Reactor Liquid Effluents, USNRC Edward F. Branagan Jr., Charles R. Nichols, and Charles A. Willis; 1982

3.13 PPL AR# 401298, "Deletion of LRW Composite Sample P-32 Analysis 5/2002"

3.14 EC-ENVR-1042 Airborne Effluent Dose Conversion Factors Used in Chemistry Procedures.

4.0 RESPONSIBILITIES

4.1 Chemistry Supervisor - SSES

4.1.1 Is responsible for calibrating, functionally testing, and providing alarm responses for radiological effluent monitoring equipment.

4.1.2 Ensures adequacy and correctness of methodology used to establish setpoints.

4.1.3 Is responsible for development of methodology and calculations used to establish setpoints

5.0 DEFINITIONS

5.1 Actual Tank Activity - The sum of the products of tank concentrations and volume for each isotope.

5.2 Cs-137 Equivalent- Concentration equivalent of 1.00E-06 µCi/ml ECL for Cs-137.

5.3 ECL - Effluent Concentration Limits as defined in 10CFR20, Appendix B.

6.0 PROCEDURE

6.1 Liquid Effluent Monitoring

Chemistry shall develop procedures implementing the following requirements for Liquid Effluent Monitoring.

6.1.1 Discharge Termination

Chemistry shall determine the setpoint concentration for the discharge termination, which limits the maximum concentration being released, as follows:

$$C_\gamma = X * \sum_n C_{\gamma n} \qquad \text{(Eq. 6.1-1)}$$

Where:

C_γ = The setpoint concentration at which the discharge would be terminated (µCi/ml).

X = A unitless number greater than one that is chosen to prevent spurious alarms that might result from non-uniformity in the activity concentrations of the liquid discharges.

$C_{\gamma n}$ = The concentration of isotope n in the contents of the tank to be discharged as determined by pre-release sampling and analyses. The summation shall include gamma-emitting isotopes only (including noble gases).

The setpoint concentration is based on the activity of the isotopes to which the monitor responds, i.e., gamma-emitting isotopes only. It is used to establish the radiation monitor setpoint (count rate) in units of cpm or cps.

6.1.2 Radiation Monitor Setpoint

The radiation monitor setpoint is the sum of the background count rate and the count rate equivalent of the setpoint concentration. The count rate equivalent of the setpoint concentration in units of µCi/ml is determined by dividing the setpoint concentration by the calibration factor (µCi/ml/cpm).

Chemistry shall determine the radiation monitor setpoint as follows:

$$S = \frac{C_\gamma}{K} + B \qquad \text{(Eq. 6.1-2)}$$

Where:

S = the radiation monitor setpoint (cpm)

C_γ = the setpoint concentration at which the discharge would be terminated from Eq. 6.1-1 (µCi/ml)

K = the radiation monitor calibration factor (µCi/ml/cpm)

B = the background radiation level for the radiation monitor (cpm)

The alarm setpoint may be established at a suitable fraction of the setpoint for discharge termination.

6.1.3 Discharge Flow Rate Limit Determination

The flow rate below which tank discharges must be maintained depends on the magnitude of the dilution required to ensure compliance with the limits of TR 3.11.1.1:

Chemistry shall establish the maximum Discharge Flow Rate using the following equation:

$$f = \frac{F}{Y * \left(\sum_{n} C_n / L_n + \sum_{NGi} C_{NGi} / 2E-4 \right) - 1} \qquad \text{(Eq. 6.1-3)}$$

Where:

f = The maximum discharge rate from the tank (gpm).

F = The minimum dilution flow rate of 5000 gpm provided by the blowdown flow from the Cooling Towers and any overflow from the spray pond (gpm).

Y = A unitless number that is chosen to ensure that the dilution flow is conservatively determined.

C_n = The concentration of isotope n in the contents of the tank to be discharged as determined by pre-release sampling and analyses. The summation shall include previous composite sample results for non-gamma emitting radionuclides such as H-3, Fe-55, Sr-89, and Sr-90 (µCi/ml).

L_n = Ten (10) times the effluent concentration (EC) for isotope n per 10CFR20, Appendix B, Table 2, Column 2 for radionuclides other than noble gases. To maintain compatibility with other federal regulations, the maximum permissible concentration (MPC) value from 10CFR20, Appendix B, Table II, Column 2 (pre-1994 10CFR20) may be used for those isotopes for which the MPC is more restrictive than (10 x EC).

C_{NGi} = The concentration of noble gas isotope i in the contents of the tank to be discharged. The summation shall include all dissolved and entrained noble gases.

Selecting values of X (Section 6.1.1) and Y (Section 6.1.3) is a matter of experience and the expected margin needed between the activity concentration and the maximum concentration limit (10 x ECL).

6.1.4 Post-Release Evaluation

Chemistry shall perform post-release evaluations when the actual composite sample results for non-gamma-emitting radionuclides exceed pre-selected criteria.

6.1.5 Service Water, SDHR Service Water, and RHR Service Water

The Service Water System provides screened water from the cooling tower basin for cooling plant systems and equipment. The supplemental Decay Heat Removal Service Water System (SDHR) provides decay heat removal during refueling outages when the Service Water System is shut down. The Residual Heat Removal (RHR) Service Water System provides water from the Engineered Safeguard Service Water (ESSW) spray pond to the RHR heat exchangers. In post-accident conditions, RHR Service Water can supply water for vessel and containment flooding. The Service Water, SDHR Service Water, and RHR Service Water Systems are not normal pathways for liquid effluents. Radiation monitors are in place on these systems to provide indication of leaks across heat exchangers into the service water.

The high radiation setpoints for these monitors are set at 1E-5/cal. factor (IE-5 = 10 times the Cs-137 equivalent). Considering the radionuclides predominant in SSES liquid effluents e.g., Co-58, Co-60, Fe-59, Mn-54 and Cr-51, use of a setpoint based on the Cs-137 ECL is reasonable based on the following parameters:

1) photon abundance (85%), photon energy (0.662 MeV)

2) magnitude of applicable ECL (1E-6 μCi/ml)

Because Service Water, SDHR Service Water, and RHR Service Water systems are not normal release pathways for liquid effluents, no credit should be taken for possible dilution scenarios. All service water should be maintained below 1E-5 μCi/ml (10 times the Cs-137 equivalent ECL) or as established by Chemistry based on operating experience (Section 2.2.5).

If some background contribution is to be added to the calculated High and Alert setpoints, a Downscale or Low Rad Setpoint is also required in order to minimize the chance of a change in the background of a monitor masking a significant trend in monitored activity. The alarm setpoints for Service Water, SDHR Service Water and RHR Service Water monitors are then determined as follows:

a. When monitor background ≤(1E-5)/Cal. Factor:

HI RAD Setpoint = 0.5 Background + (1E-5)/Cal. Factor

DOWNSCALE or LOW RAD Setpoint = 0.5 Background

b. When monitor background >(1E-5)/Cal. Factor:

HI RAD Setpoint = Background + 0.5 (1E-5)/Cal. Factor

DOWNSCALE or LOW RAD Setpoint = Background - 0.5 (1E-5)/Cal. Factor

Where:

Setpoint	=	alarm threshold value to be entered into monitor (cps for Service Water and SDHR Service Water, cpm for RHR Service Water)
Background	=	monitor background at most recent background determination (cps for Service Water, and SDHR Service Water, cpm for RHR Service Water)
(1E-5)	=	10 times the Cs-137 ECL (μCi/ml)
Cal. Factor	=	monitor response factor per unit Cs-137 concentration determined during most recent calibration (μCi/ml per cps for Service Water and SDHR Service Water, μCi/ml per cpm for RHR Service Water)

The ALERT RAD setpoints for the RHR Service Water monitors are maintained at 80% of the applicable HI RAD setpoint (cpm).

6.2 Airborne Effluent Monitoring - Noble Gas

The methodology outlined in Equations 6.2-1a and 6.2-1b shall be utilized in implementing the following requirements for Airborne Effluent Monitoring of Noble Gas.

6.2.1 Site Limiting Release Rate - Noble Gas

a. The limiting total body and skin release rates are calculated as follows:

$$L_{TB} = \frac{Q_{NG} * DR_{TB} * k}{D_{TB}} \qquad \text{(Eq. 6.2-1a)}$$

$$L_S = \frac{Q_{NG} * DR_S * k}{D_S} \qquad \text{(Eq. 6.2-1b)}$$

Where:

L_{TB} = limiting release rate- noble gas total body (µCi/min)

L_S = limiting release rate- noble gas skin (µCi/min)

Q_{NG} = total noble gas source term (Ci)

DR_{TB} = total body dose rate limit for the noble gas effluent (500 mrem/year) (ref. TRO 3.11.2.1, I.A)

DR_S = total skin dose rate limit for the noble gas effluent (3000 mrem/year) (ref. TRO 3.11.2.1, I.B)

D_{TB} = limiting total body offsite dose resulting from the noble gas source term Q_{NG} (mrem)

D_S = limiting skin offsite dose resulting from the noble gas source term Q_{NG} (mrem)

k = units conversion factor
(1E6 µCi/Ci) * (1 yr/365 days) * (1 day/ 24 hours) * (1 hour/60 minutes)

D_{TB} and D_S are determined in accordance with ODCM-QA-004 using the noble gas source term and dispersion parameters provided in Attachment A.

Note, Q_{NG} is the sum of the noble gas activities provided in Attachment A. The ratio of the annual source term to the corresponding total body and skin dose is used in the above equations. Thus, either the total annual release per unit or the total annual release for the site may be used.

b. The site limiting release rate for noble gas, L_{NG}, shall be set as the lesser of L_{TB} and L_S and the site limiting release rate for noble gas implemented in the Emergency Plan. The Emergency Plan may be revised to implement the lesser of L_{TB} and L_S to provide additional flexibility in plant operations.

6.2.2 Monitor Limiting Concentration - Noble Gas

The limiting noble gas concentration shall be determined as follows:

$$C_{NG} = \frac{L_{NG}}{\sum F_V} \qquad \text{(Eq. 6.2-2)}$$

Where:

C_{NG} = limiting noble gas concentration (µCi/cc)

L_{NG} = site limiting release rate - noble gas from §6.2.1 (µCi/min)

F_V = vent flow high limit for vent V (cc/min)

7.0 RECORDS

None.

PARAMETERS USED TO DETERMINE AIRBORNE EFFLUENT MONITOR SETPOINTS

NUCLIDE	TOTAL RELEASE (1) (Ci/year per reactor)
Ar-41	2.60E+01
Kr-83m	0.00E+00
Kr-85m	1.10E+01
Kr-85	2.30E+02
Kr-87	1.42E+01
Kr-88	2.22E+01
Kr-89	1.47E+02
Xe-131m	1.80E+01
Xe-133m	0.00E+00
Xe-133	2.23E+03
Xe-135m	6.70E+02
Xe-135	9.73E+02
Xe-137	4.68E+02
Xe-138	2.10E+02

Annual Average Dispersion Parameters - Limiting Site Boundary (2)

Relative Concentration	1.46E-5 sec/m^3
Decayed Relative Concentration	1.46E-5 sec/m^3
Decayed, Depleted Relative Concentration	1.35E-5 sec/m^3

Notes:

1. Design basis "expected" gaseous effluent releases per EC-RADN-1041
2. 1973-76 Meteorological Data Updated to 1996 Land Use Survey per EC-RADN-1041

PROCEDURE COVER SHEET

PPL SUSQUEHANNA, LLC PROCEDURE	
AIRBORNE EFFLUENT DOSE CALCULATIONS ADHERENCE LEVEL: INFORMATION USE	ODCM-QA-004 Revision 3 Page 1 of 64

QUALITY CLASSIFICATION:	APPROVAL CLASSIFICATION:
(X) QA Program ( ) Non-QA Program	(X) Plant (X) Non-Plant ( ) Instruction

EFFECTIVE DATE: 1-28-2004

PERIODIC REVIEW FREQUENCY: N/A

PERIODIC REVIEW DUE DATE: N/A

RECOMMENDED REVIEWS:

Nuclear Emergency Planning

Procedure Owner: Francis J. Hickey

Responsible Supervisor: Chemistry Supervisor-SSES

Responsible FUM: Chemistry Supervisor-SSES

Responsible Approver: Vice President-Nuclear Operations

CONTROLLED

PROCEDURE REVISION SUMMARY

TITLE: AIRBORNE EFFLUENT DOSE CALCULATIONS

The changes made do not reduce or compromise the level of effluent control or the accuracy and/or reliability of dose calculations or setpoint determinations as required by 10CFR20.1302, 40CFR190, 10CFR50.36a and 10CFR50, Appendix I. Additionally, the changes outlined below (1) do not alter the conduct of the radiological environmental monitoring program, (2) do not change the radioactive effluent controls and radiological environmental monitoring activities, and (3) do not change the information to be included in the Annual Radiological Environmental Operating and Radioactive Effluent Release Reports.

1) Added Section 6.3, which outlines the methodology for determination of Particulate/Iodine Limiting Release Rates and Limiting Release Concentrations.

2) Added Section 6.4, which incorporates Airborne Monitor Line Loss Correction Factors. The Line Loss Correction Factors are utilized in the determination of gaseous effluent concentrations. Reference 3.15 added to support the Line Loss Correction Factors.

3) Attachment E added to provide parameters used to support determination of Particulate/Iodine Limiting Release Rates. Reference 3.16 added to support Attachment E.

4) Revised sections 2.1.2, and 2.4.5, to change the title of the "Annual Effluent and Waste Disposal Report" to "Radioactive Effluent Release Report" in order to coincide with Unit-1 and Unit-2 Tech. Spec. Section 5.6.3.

TABLE OF CONTENTS

SECTION		PAGE
1.	PURPOSE	4
2.	POLICY/DISCUSSION	4
3.	REFERENCES	6
4.	RESPONSIBILITIES	7
5.	DEFINITIONS	8
6.	PROCEDURE	9
6.1	Noble Gases	9
6.2	Radionuclides Other Than Noble Gases	11
6.3	Airborne Effluent Monitoring - Iodine and Particulate	12
6.4	Airborne Monitor Line Loss Corrections	15
6.5	Airborne Effluent Dose Calculations Exceeding Twice the Quarterly or Annual TRM Values	16
6.6	Projected Dose from Gaseous Effluent	16
7.	RECORDS	16

ATTACHMENTS

ATTACHMENT		PAGE
A	Dose Factors for Noble Gases5	17
B	Annual Average Dispersion Factors Used for Monthly Surveillances	18
C	ODCM Maximum Pathway Dose Factors: Radionuclides other than Noble Gases	19
D	Evaluation of Insignificant Effluent Pathway Gaseous Releases	63
E	Parameters Used To Determine Particulate/Iodine Limiting Release Rates	64

1. PURPOSE

The purpose of this procedure is to provide the methodology and parameters used in calculating air dose resulting from noble gas effluent and maximum individual, whole body, and organ doses due to airborne effluents to ensure compliance with the dose limitations in the Technical Requirements Manual (Sections 3.11.2.2, 3.11.2.3, 3.11.2.5 and 3.11.3) and 10CFR20.1302.

This procedure constitutes part of the SSES Offsite Dose Calculation Manual (ODCM) which is a licensing basis document.

2. POLICY/DISCUSSION

2.1 Meteorological Parameters

2.1.1 The meteorological parameters are provided by the SSES meteorology program. Instrumentation and controls necessary to ensure that sufficient meteorological data are available to determine radiation doses to the public as a result of radioactive releases are specified in TR 3.3.3.

2.1.2 Annual dose calculations for the Radioactive Effluent Release Report are based on the actual meteorological conditions concurrent with the reporting year.

2.1.3 Monthly dose calculations are based on the limiting sector average annual dispersion factors based on a selected period of time. The dispersion factors currently used are provided in Attachment B.

2.1.4 Use of the no-decay-undepleted X/Q is recommended for dose computations, because it is conservative for all isotopes. Consideration for depletion of radioiodines and particulates and radioactive decay of the plume is acceptable, but not required.

2.1.5 The methodology described herein incorporates parameters outlined in Regulatory Guide 1.109, Rev. 1, October, 1977, Calculation of Annual Doses to Man from Routine Releases of Reactor Effluents for the Purposes of Evaluating Compliance with 10CFR50, Appendix I, and NUREG-0133, Preparation of Radiological Effluent Technical Specifications for Nuclear Power Plants.

2.2 Noble Gases

2.2.1 The methods for sampling and analysis of continuous ventilation releases are given in the applicable plant procedures.

2.3 Radionuclides Other Than Noble Gases

2.3.1 The methods for sampling and analysis of continuous ventilation releases for radioiodines and radioactive particulates are given in the applicable plant procedures and shall be performed in accordance with TR Table 3.11.2.1-1.

2.4 Effluent Data

2.4.1 The total number of Curies released for each radionuclide during the time period being evaluated is supplied by the SSES effluent monitoring program.

2.4.2 For determination of compliance with the Technical Requirements Manual dose limits, effluent totals shall be based only on activity positively detected at the 95% confidence level.

2.4.3 Applicable airborne pathways at SSES include immersion, inhalation, ground exposure, vegetable ingestion, and cow-milk ingestion. The grass-to-meat-to-man airborne pathway is applicable depending on its identification in the annual Land Use Census Report.

2.4.4 Quarterly doses are the summation of the applicable monthly values.

2.4.5 Effluent data from the following Insignificant Effluent Pathways shall be included in the Radioactive Effluent Release Report: Units 1 and 2 CSTs, Units 1 and 2 Main Turbine and RFPT Lube Oil Systems, Units 1 and 2 Hydrogen Seal Oil Systems, the RWST, Batch Lube Oil Tank and Noble Gases Entrained in Liquid Effluents.

The contribution from Insignificant Effluent Pathways to the total dose from all SSES effluents should be small enough that the dose from these pathways combined with the dose from Significant Effluent Pathways would not be expected to challenge the radiological effluent dose limits for the SSES. Insignificant Pathway Effluents will be tracked and evaluated quarterly.

2.5 Assignment of Releases to the Reactor Units

2.5.1 For determination of compliance with SSES radioactive effluent dose limits which are on a "per reactor unit" basis:

a. Effluents from the Unit 1 Reactor Building vent and the Unit 1 Turbine Building vent shall be included as Unit 1 releases. Effluent from the following Insignificant Effluent Pathways associated with Unit 1 shall also be included in the Unit 1 releases: the Unit 1 Condensate Storage Tank Vent, the Unit 1 Main Turbine and RFPT Lube Oil System vents, and the Unit 1 Hydrogen Seal Oil system vent. The Radwaste Building vent shall also be included in Unit 1 releases.

b. Effluents from the Unit 2 Reactor Building vent and the Unit 2 Turbine Building vent shall be included as Unit 2 releases. Effluents from the following Insignificant Effluent Pathways associated with Unit 2 shall also be included in the Unit 2 releases: the Unit 2 Condensate Storage Tank vent, the Unit 2 Main Turbine and RFPT Lube Oil System vents, and the Unit 2 Hydrogen Seal Oil System vent.

c. Effluents from the Standby Gas Treatment System vent and the following Insignificant Effluent Pathways common to both Units 1 and 2 shall be divided equally between Units 1 and 2 releases, or apportioned appropriately between the units if sufficient information is available: Refueling Water Storage Tank, Noble Gases Entrained in Liquid Effluents and Batch Lube Oil Tank.

3. REFERENCES

3.1 TR Table 3.11.2.1-1, Radioactive Gaseous Waste Sampling and Analysis Program

3.2 TR 3.11.2.2, [Radioactive Effluents] [Gaseous Effluents] Dose-Noble Gases

3.3 TR 3.11.2.3, [Radioactive Effluents] [Gaseous Effluents] Dose-Iodine, Tritium, and Radionuclides in Particulate Form

3.4 TR 3.11.2.5, [Radioactive Effluents] [Gaseous Effluents] Ventilation Exhaust Treatment System

3.5 TR 3.11.3, Total Dose

3.6 TR 3.3.3, Meteorological Instrumentation

3.7 10CFR20 Appendix B, Annual Limits on Intake (ALIs) and Derived Air Concentrations (DACs) of Radionuclides for Occupational Exposure; Effluent Concentrations; Concentrations for Release to Sewage

3.8 Regulatory Guide 1.109, Rev. 1, October, 1977, Calculation of Annual Doses to Man from Routine Releases of Reactor Effluents for the Purposes of Evaluating Compliance with 10 CFR 50, Appendix I

3.9 NUREG-0133, Preparation of Radiological Effluent Technical Specifications for Nuclear Power Plants, October 1978

3.10 NEPM-QA-1017, SSES Meteorological Data Processing and Reporting

3.11 ODCM-QA-006, Total Dose Calculations

3.12 PPL Calculation EC-ENVR-1055, Rev. 0, "Evaluation of Dose Factors for Liquids and Gaseous Effluent Releases"

3.13 SSES Annual Land Use Census Report

3.14 PPL Calculation EC-ENVR-1008, Rev. 4, "Unmonitored Release Analysis: Systems Identified in PLI-77223"

3.15 Analysis of the Effluent Sampling Line Particulate and Iodine Losses for the Susquehanna Steam Electric Station by Watts-Bar Jones, February 1988 (PLI-55451 and PLI-54729)

3.16 PPL Calculation EC-RADN-1041, SSES Expected Liquid and Gaseous Effluent Aquatic Does and Atmospheric Does – NWC/CFS/HWC

4. RESPONSIBILITIES

4.1 Chemistry Supervisor - SSES

4.1.1 Ensures adequacy and correctness of methodology to be used in calculating doses resulting from airborne effluents as necessary for fulfillment of Technical Requirement Surveillances (3.11.2.2.1, 3.11.2.3.1, 3.11.3).

4.1.2 Ensures the cumulative dose contributions for the current calendar quarter and current calendar year are determined every 31 days in fulfillment of TRSs 3.11.2.2.1, 3.11.2.3.1, 3.11.3.

4.1.3 Ensures methodology and parameters to be used in calculating doses resulting from airborne effluents are developed to ensure compliance with the dose limitations in the Technical Requirements Manual.

5. DEFINITIONS

5.1 FID - Fraction of airborne radioiodine effluent that is estimated to be elemental iodine. The fraction of iodine deposited (FID) is assumed to be 0.5 (Regulatory Guide 1.109 (page 1.109-26)).

5.2 MEMBER(S) OF THE PUBLIC - Shall include all persons who are not occupationally associated with the plant. This category does not include employees of the utility, its contractors, or vendors. Also excluded from this category are persons who enter the site to service equipment or to make deliveries. This category does include persons who use portions of the site for recreational, occupational, or other purposes not associated with the plant.

5.3 UNRESTRICTED AREA - Shall be any area at or beyond the site boundary, access to which is not controlled by the licensee for purposes of protection of individuals from exposure to radiation and radioactive materials, or any area within the site boundary used for residential quarters or for industrial, commercial, institutional, and/or recreational purposes.

6. PROCEDURE

6.1 Noble Gases

6.1.1 The dose rate at a specified location due to noble gases released in airborne effluents shall be determined by the following equation for whole body dose:

$$D_{wb} = \sum_{i} \sum_{v} (K_i)(X/Q)_v (Q'_{iv}) \qquad \text{(Eq. 1) (Ref. 3.9)}$$

and by the following equation for skin dose:

$$D_S = \sum_{i} \sum_{v} [L_i + 1{:}1(M_i)](X/Q)_v (Q'_{iv}) \qquad \text{(Eq. 2) (Ref. 3.9)}$$

where:

D_{wb} = the annual whole body dose (mrem/yr)

K_i = the whole body dose factor due to gamma emissions for each identified noble gas radionuclide (i) from Attachment A (mrem/yr per µCi/m^3)

$(X/Q)_v$ = the relative concentration factor for the specified location from vent release point (v) such as from Attachment B (sec/m^3)

Q'_{iv} = the release rate of radionuclide (i) from vent (v) (µCi/sec)

DS = the annual skin dose (mrem/yr)

Li = the skin dose factor due to the beta emissions for each identified noble gas radionuclide (i) from Attachment A (mrem/yr per µCi/m^3)

M_i = the air dose factor due to gamma emissions for each identified noble gas radionuclide (I) from Attachment A (mrad/yr per µCi/m3)

1.1 = unit conversion constant of 1.1 mrem/mrad converts air dose to skin dose

6.1.2 The air dose at a specified location due to noble gases released in airborne effluents during any specified time period shall be determined by the following equation for gamma radiation:

$$D_g = 3.17E-8 \sum_i (M_i)(X/Q)_v (Q_{iv}) \qquad \text{(Eq. 3) (Ref. 3.9)}$$

and by the following equation for beta radiation:

$$D_b = 3.17E-8 \sum_i (N_i)(X/Q)_v (Q_{iv}) \qquad \text{(Eq. 4) (Ref. 3.9)}$$

where:

D_g	=	the total gamma air dose from airborne effluents for the specified time period (mrad)
D_b	=	the total beta air dose from airborne effluents for the specified time period (mrad)
3.17E-8	=	the inverse of seconds in a year (yr/sec)
Mi	=	the air dose factor due to gamma emissions for each identified noble gas radionuclide (i) from Attachment A (mrad/yr per µCi/m3)
Ni	=	the air dose factor due to beta emissions for each identified noble gas radionuclide (i) from Attachment A (mrad/yr per µCi/m^3)
$(X/Q)_v$	=	the relative concentration factor for the specified location such as from Attachment B (sec/m3)
Qiv	=	the integrated release of radionuclide (i) from all vents (v) for a specified time period. (µCi)

6.2 Radionuclides Other Than Noble Gases

6.2.1 The dose rate at a specified location due to inhalation of radioactive materials released in airborne effluent (including I-131 and I-133) shall be determined by the following equation for any organ:

$$D_c = \sum_i \sum_v (R_i)(W_v)(Q'_{iv}) \quad \text{(Eq. 5) (Ref. 3.9)}$$

where:

D_c = the annual organ dose (mrem/yr)

R_i = the dose factor based on inhalation pathway for each radionuclide other than noble gases (i) for the inhalation pathway from Attachment C. (mrem/yr per $\mu Ci/m^3$)

W_v = the relative concentration factor for the specified location from Attachment B. (sec/m^3)

Q'_{iv} = the release rate of radionuclide (i) from vent (v) ($\mu Ci/sec$)

6.2.2 The critical organ dose to an individual from radionuclides other than noble gases released in airborne effluent (including I-131 and I-133) during any specified time period at a specified location shall be determined by the following equation:

$$D_c = 3.17E-8 \sum_i (R_i)(W_v)(Q_{iv}) \quad \text{(Eq. 6)}$$

where:

D_c = the total dose to a critical organ from radionuclides other than noble gases for a specified time period (mrem)

R_i = the dose factor based on inhalation pathway for each radionuclide other than noble gases (i) for the inhalation pathway (mrem/yr per $\mu Ci/m^3$) and for ingestion and ground plane pathways (mrem-m^2/yr per $\mu Ci/sec$) from Attachment C

W_v = Relative concentration (X/Q) (sec/m^3) for the inhalation pathway and relative deposition (D/Q: m^{-2}) for the ingestion and ground pathways such as from Attachment B

Q_{iv} = the integrated release of radionuclide (i) from all vents (v) for a specified time period (µCi)

3.17E-8 = the inverse of seconds in a year (yr/sec)

For radioiodines, the deposition model considers only the elemental fraction of the effluent. Thus, deposition is computed only for that fraction of the effluent that is estimated to be elemental iodine. The fraction iodine deposited (FID) is assumed to be 0.5 (Regulatory Guide 1.109 (page 1.109-26)). The deposition pathway dose factors for radioiodines presented in Attachment C have been adjusted by a factor of 0.5.

6.3 Airborne Effluent Monitoring - Iodine and Particulate

The methodology outlined in Equations 7, 8, 9, and 10 shall be utilized in implementing the following requirements for Airborne Effluent Monitoring of iodine and particulates. Note, the methodology for determining the limiting release rate and concentration for airborne iodine and particulates is evaluated in EC-ENVR-1040.

6.3.1 Site Limiting Release Rate – Iodine

a. The limiting I-131 release rate shall be determined as follows:

$$L_I = \frac{Q_I * DR_{IP} * k}{D_{IP}} \quad \text{(Eq. 7)}$$

Where:

L_I = limiting release rate- I-131 (µCi/min)

Q_I = total I-131 source term (Ci)

DR_{IP} = dose rate limit for I-131, I-133, tritium, and particulate effluent (1500 mrem/year maximum organ, inhalation) (ref. TRO 3.11.2.1, II.A)

D_{IP} = limiting (maximum) organ dose for all age groups resulting from the total I-131 and I-133 source term (mrem)

k = units conversion factor
(1E6 µCi/Ci) * (1 yr/365 days) * (1 day/24 hours) *(1 hour/ 60 minutes)

D_{IP} shall be determined per equation 6 using the iodine source term and dispersion parameters provided in Attachment E.

Note, Q_I is the I-131 activity provided in Attachment E. The ratio of the annual source term to the corresponding organ dose is used in the above equations. Thus, either the total annual release per unit or the total annual release for the site may be used.

6.3.2 Limiting Concentration Iodine

The limiting I-131 concentration shall be determined as follows:

$$C_I = \frac{L_I}{\sum F_V} \qquad \text{(Eq. 8)}$$

Where:

C_i = limiting I-131 concentration (µCi/cc)

L_I = limiting I-131 release rate from §6.3.1 (µCi/min)

F_V = vent flow high limit for vent V (cc/min)

6.3.3 Site Limiting Release Rate – Particulates

a. The limiting release rate for particulates shall be determined as follows:

$$L_P = \frac{Q_P * DR_{IP} * k}{D_P} \quad \text{(Eq.9)}$$

Where:

L_P	=	limiting release rate- particulates (µCi/min)
Q_P	=	total particulate source term (Ci)
DR_{IP}	=	dose rate limit for I-131, I-133, tritium, and particulate effluent (1500 mrem/year maximum organ, inhalation) (ref. TRO 3.11.2.1, II.A)
D_P	=	limiting (maximum) organ dose for all age groups resulting from the source term Q_P (mrem)
k	=	units conversion factor (1E6 µCi/Ci) * (1 yr/365 days) * (1 day/ 24 hours) * (1 hour/ 60 minutes)

D_P shall be determined per equation 6 using the particulate source term and dispersion parameters provided in Attachment E.

Note, Q_P is the sum of the particulate activities provided in Attachment E. The ratio of the annual source term to the corresponding organ dose is used in the above equations. Thus, either the total annual release per unit or the total annual release for the site may be used.

6.3.4 Limiting Concentration - Particulates

The limiting particulate concentration shall be determined as follows:

$$C_P = \frac{L_P}{\sum F_V} \qquad \text{(Eq. 10)}$$

Where:

C_p = limiting particulate concentration (µCi/cc)

L_p = limiting particulate release rate from §6.3.3 (µCi/min)

F_v = vent flow high limit for vent v (cc/min)

6.4 Airborne Monitor Line Loss Corrections

6.4.1 Chemistry shall apply the following correction factors to sample analysis results in order to correct for airborne effluent monitor sample line loss in accordance with station procedures:

CORRECTION FACTORS

(Ref. 3.15)

6.4.2 Effluent Monitors	Iodine	Particulates
Reactor Building Unit 1 Refuel Floor	1.5	3.2
Reactor Building Unit 1 Roof	1.0	1.0
Reactor Building Unit 2 Refuel Floor	1.5	3.2
Reactor Building Unit 2 Roof	1.0	1.0
Turbine Building Unit 1 Refuel Floor	1.6	3.6
Turbine Building Unit 1 PAVSS	1.7	4.2
Turbine Building Unit 1 Roof	1.0	1.0
Turbine Building Unit 2 Refuel Floor	1.6	3.6
Turbine Building Unit 2 PAVSS	1.7	4.3
Turbine Building Unit 2 Roof	1.0	1.0
Standby Gas Treatment; Refuel Floor	1.5	3.9
Standby Gas Treatment; PAVSS	1.6	4.4
Standby Gas Treatment; Roof	1.0	1.0

6.5 Airborne Effluent Dose Calculations Exceeding Twice the Quarterly or Annual TRM Values

6.5.1 When the results of airborne dose calculations exceed twice the value of TR's 3.11.2.2.a, 3.11.2.2.b, 3.11.2.3.a, or 3.11.2.3.b, calculations shall be made which include the direct radiation contribution in accordance with ODCM-QA-006 to determine if the limits of TR 3.11.3 have been exceeded. If the limits of TR 3.11.3 have been exceeded, a special report shall be prepared and submitted to the NRC within 30 days which addresses the actions specified in TR 3.11.3.

6.6 Projected Dose from Gaseous Effluent

6.6.1 Doses from gaseous effluents released to unrestricted areas are projected at least every 31 days as required by TRM 3.11.2.5. These projections are made by averaging the doses from previous operating history (normally the previous three months) which is indicative of expected future operations.

7. RECORDS

None

DOSE FACTORS FOR NOBLE GASES (1)

	Whole Body Dose Factor	Skin Dose Factor	Gamma Air Dose Factor	Beta Air Dose Factor
	K_i	L_i	M_i	N_i
Radionuclide	(mrem/yr per µCi/m^3)	(mrem/yr per µCi /m^3)	(mrad/yr per µCi/m^3)	(mrad/yr per µCi/m^3)
Kr-83m	7.56E-02	---	1.93E+01	2.88E+02
Kr-85m	1.17E+03	1.46E+03	1.23E+03	1.97E+03
Kr-85	1.61E+01	1.34E+03	1.72E+01	1.95E+03
Kr-87	5.92E+03	9.73E+03	6.17E+03	1.03E+04
Kr-88	1.47E+04	2.37E+03	1.52E+04	2.93E+03
Kr-89	1.66E+04	1.01E+04	1.73E+04	1.06E+04
Kr-90	1.56E+04	7.29E+03	1.63E+04	7.83E+03
Xe-131m	9.15E+01	4.76E+02	1.56E+02	1.11E+03
Xe-133m	2.51E+02	9.94E+02	3.27E+02	1.48E+03
Xe-133	2.94E+02	3.06E+02	3.53E+02	1.05E+03
Xe-135m	3.12E+03	7.11E+02	3.36E+03	7.39E+02
Xe-135	1.81E+03	1.86E+03	1.92E+03	2.46E+03
Xe-137	1.42E+03	1.22E+04	1.51E+03	1.27E+04
Xe-138	8.83E+03	4.13E+03	9.21E+03	4.75E+03
Ar-41	8.84E+03	2.69E+03	9.30E+03	3.28E+03

1. The listed dose factors are for radionuclides that may be detected in airborne effluents and derived from Table B-1 in Reg. Guide 1.109.

ANNUAL AVERAGE DISPERSION FACTORS USED FOR MONTHLY SURVEILLANCES [1]

Type of Location	Direction	Distance (miles)	X/Q (sec/m^3)	X/Q (sec/m^3)	X/Q (sec/m^3)	D/Q (per m^2)
			no decay	2.260 day decay	8.000 day decay	
			undepleted	undepleted	depleted	
Maximum Site Boundary	SW	0.60	2.40E-05	2.40E-05	2.10E-05	3.00E-08
Closest Site Boundary	S	0.34	1.40E-05	1.40E-05	1.30E-05	4.50E-08
Maximum X/Q Residence	WSW	1.16	1.10E-05	1.10E-05	9.70E-06	1.10E-08
Maximum Dairy Animal	WSW	1.70	6.60E-06	6.50E-06	5.50E-06	6.10E-09
Maximum D/Q Residence	SE	0.38	4.10E-06	4.10E-06	3.80E-06	2.20E-08

Notes:

1. July, 1981, through December, 1985, meteorological data.

DOSE FACTORS: RADIONUCLIDES OTHER THAN NOBLE GASES
(Ref.3.9 Ch. 5.2, 5.3)

Units: Airborne Pathways & Tritium Ingestion: (mrem/yr)/(µCi/m^3))
Deposition Pathways: (m^2 * (mrem/yr)/(µCi/sec)
AgeGroup: ADULT
Pathway: Grs/Goat/Milk (GMILK)

Nuclide	Bone	Liver	Thyroid	Kidney	Lung	GI-Lli	Skin	TB
H-3	0.00e+00	1.56e+03	1.56e+03	1.56e+03	1.56e+03	1.56e+03	0.00e+00	1.56e+03
C-14	2.63e+08	5.27e+07	5.27e+07	5.27e+07	5.27e+07	5.27e+07	0.00e+00	5.27e+07
NA-24	2.94e+05	2.94e+05	2.94e+05	2.94e+05	2.94e+05	2.94e+05	0.00e+00	2.94e+05
P-32	3.19e+09	1.28e+09	0.00e+00	0.00e+00	0.00e+00	2.31e+09	0.00e+00	7.93e+08
CR-51	0.00e+00	0.00e+00	2.05e+03	7.56e+02	4.55e+03	8.63e+05	0.00e+00	3.43e+03
MN-54	0.00e+00	1.01e+06	0.00e+00	3.01e+05	0.00e+00	3.09e+06	0.00e+00	1.93e+05
MN-56	0.00e+00	5.07e-04	0.00e+00	6.44e-04	0.00e+00	1.62e-02	0.00e+00	9.00e-05
FE-55	3.27e+05	2.26e+05	0.00e+00	0.00e+00	1.26e+05	1.29e+05	0.00e+00	5.26e+04
FE-59	3.86e+05	9.08e+05	0.00e+00	0.00e+00	2.54e+05	3.03e+06	0.00e+00	3.48e+05
CO-58	0.00e+00	5.66e+05	0.00e+00	0.00e+00	0.00e+00	1.15e+07	0.00e+00	1.27e+06
CO-60	0.00e+00	1.97e+06	0.00e+00	0.00e+00	0.00e+00	3.70e+07	0.00e+00	4.34e+06
NI-63	8.08e+08	5.60e+07	0.00e+00	0.00e+00	0.00e+00	1.17e+07	0.00e+00	2.71e+07
NI-65	4.52e-02	5.87e-03	0.00e+00	0.00e+00	0.00e+00	1.49e-01	0.00e+00	2.68e-03
CU-64	0.00e+00	2.67e+03	0.00e+00	6.72e+03	0.00e+00	2.27e+05	0.00e+00	1.25e+03
ZN-65	1.65e+08	5.24e+08	0.00e+00	3.50e+08	0.00e+00	3.30e+08	0.00e+00	2.37e+08
ZN-69	2.64e-13	5.04e-13	0.00e+00	3.28e-13	0.00e+00	7.58e-14	0.00e+00	3.51e-14
BR-83	0.00e+00	0.00e+00	0.00e+00	0.00e+00	0.00e+00	1.71e-02	0.00e+00	1.19e-02
BR-84	0.00e+00	0.00e+00	0.00e+00	0.00e+00	0.00e+00	1.65e-29	0.00e+00	2.10e-24
RB-86	0.00e+00	3.11e+08	0.00e+00	0.00e+00	0.00e+00	6.14e+07	0.00e+00	1.45e+08
RB-88	0.00e+00	2.99e-46	0.00e+00	0.00e+00	0.00e+00	4.14e-57	0.00e+00	1.59e-46
RB-89	0.00e+00	7.93e-55	0.00e+00	0.00e+00	0.00e+00	4.61e-68	0.00e+00	5.58e-55
SR-89	3.05e+09	0.00e+00	0.00e+00	0.00e+00	0.00e+00	4.89e+08	0.00e+00	8.75e+07
SR-90	9.83e+10	0.00e+00	0.00e+00	0.00e+00	0.00e+00	2.84e+09	0.00e+00	2.41e+10
SR-91	6.11e+04	0.00e+00	0.00e+00	0.00e+00	0.00e+00	2.91e+05	0.00e+00	2.47e+03
SR-92	1.04e+00	0.00e+00	0.00e+00	0.00e+00	0.00e+00	2.07e+01	0.00e+00	4.51e-02
Y-90	8.51e+00	0.00e+00	0.00e+00	0.00e+00	0.00e+00	9.02e+04	0.00e+00	2.28e-01
Y-91	1.03e+03	0.00e+00	0.00e+00	0.00e+00	0.00e+00	5.67e+05	0.00e+00	2.76e+01
Y-91M	7.59e-21	0.00e+00	0.00e+00	0.00e+00	0.00e+00	2.23e-20	0.00e+00	2.94e-22
Y-92	6.78e-06	0.00e+00	0.00e+00	0.00e+00	0.00e+00	1.19e-01	0.00e+00	1.98e-07
Y-93	2.69e-02	0.00e+00	0.00e+00	0.00e+00	0.00e+00	8.54e+02	0.00e+00	7.44e-04
ZR-95	1.13e+02	3.63e+01	0.00e+00	5.70e+01	0.00e+00	1.15e+05	0.00e+00	2.46e+01
ZR-97	5.21e-02	1.05e-02	0.00e+00	1.59e-02	0.00e+00	3.26e+03	0.00e+00	4.81e-03
NB-95	9.91e+03	5.51e+03	0.00e+00	5.45e+03	0.00e+00	3.35e+07	0.00e+00	2.96e+03
MO-99	0.00e+00	2.98e+06	0.00e+00	6.74e+06	0.00e+00	6.90e+06	0.00e+00	5.66e+05
TC-99M	4.02e-01	1.14e+00	0.00e+00	1.72e+01	5.56e-01	6.72e+02	0.00e+00	1.44e+01
TC-101	3.77e-61	5.44e-61	0.00e+00	9.79e-60	2.78e-61	1.63e-72	0.00e+00	5.33e-60
RU-103	1.22e+02	0.00e+00	0.00e+00	4.66e+02	0.00e+00	1.43e+04	0.00e+00	5.26e+01
RU-105	1.04e-04	0.00e+00	0.00e+00	1.34e-03	0.00e+00	6.35e-02	0.00e+00	4.10e-05

DOSE FACTORS: RADIONUCLIDES OTHER THAN NOBLE GASES
(Ref.3.9 Ch. 5.2, 5.3)

Units: Airborne Pathways & Tritium Ingestion: (mrem/yr)/(µCi/m^3))
Deposition Pathways: (m^2 * (mrem/yr)/(µCi/sec)
AgeGroup: ADULT
Pathway: Grs/Goat/Milk (GMILK)

Nuclide	Bone	Liver	Thyroid	Kidney	Lung	GI-Lli	Skin	TB
RU-106	2.45e+03	0.00e+00	0.00e+00	4.73e+03	0.00e+00	1.58e+05	0.00e+00	3.10e+02
AG-110M	6.99e+06	6.46e+06	0.00e+00	1.27e+07	0.00e+00	2.64e+09	0.00e+00	3.84e+06
TE-125M	1.96e+06	7.08e+05	5.88e+05	7.95e+06	0.00e+00	7.81e+06	0.00e+00	2.62e+05
TE-127	7.88e+01	2.83e+01	5.83e+01	3.21e+02	0.00e+00	6.21e+03	0.00e+00	1.70e+01
TE-127M	5.49e+06	1.96e+06	1.40e+06	2.23e+07	0.00e+00	1.84e+07	0.00e+00	6.70e+05
TE-129	3.53e-11	1.32e-11	2.71e-11	1.48e-10	0.00e+00	2.66e-11	0.00e+00	8.59e-12
TE-129M	7.23e+06	2.70e+06	2.48e+06	3.02e+07	0.00e+00	3.64e+07	0.00e+00	1.14e+06
TE-131	4.82e-34	2.02e-34	3.97e-34	2.11e-33	0.00e+00	6.83e-35	0.00e+00	1.52e-34
TE-131M	4.34e+04	2.12e+04	3.36e+04	2.15e+05	0.00e+00	2.11e+06	0.00e+00	1.77e+04
TE-132	2.88e+05	1.87e+05	2.06e+05	1.80e+06	0.00e+00	8.82e+06	0.00e+00	1.75e+05
I-130	2.53e+05	7.46e+05	6.33e+07	1.17e+06	0.00e+00	6.43e+05	0.00e+00	2.95e+05
I-131	1.78e+08	2.54e+08	8.33e+10	4.36e+08	0.00e+00	6.71e+07	0.00e+00	1.46e+08
I-132	1.01e-01	2.69e-01	9.41e+00	4.28e-01	0.00e+00	5.05e-02	0.00e+00	9.41e-02
I-133	2.33e+06	4.05e+06	5.95e+08	7.06e+06	0.00e+00	3.64e+06	0.00e+00	1.23e+06
I-134	1.27e-12	3.46e-12	6.00e-11	5.51e-12	0.00e+00	3.02e-15	0.00e+00	1.24e-12
I-135	7.76e+03	2.03e+04	1.34e+06	3.26e+04	0.00e+00	2.29e+04	0.00e+00	7.50e+03
CS-134	1.70e+10	4.04e+10	0.00e+00	1.31e+10	4.34e+09	7.06e+08	0.00e+00	3.30e+10
CS-136	7.90e+08	3.12e+09	0.00e+00	1.74e+09	2.38e+08	3.54e+08	0.00e+00	2.25e+09
CS-137	2.21e+10	3.03e+10	0.00e+00	1.03e+10	3.42e+09	5.86e+08	0.00e+00	1.98e+10
CS-138	2.95e-23	5.83e-23	0.00e+00	4.29e-23	4.23e-24	2.49e-28	0.00e+00	2.89e-23
BA-139	5.48e-09	3.91e-12	0.00e+00	3.65e-12	2.22e-12	9.72e-09	0.00e+00	1.60e-10
BA-140	3.23e+06	4.05e+03	0.00e+00	1.38e+03	2.32e+03	6.64e+06	0.00e+00	2.11e+05
BA-141	5.71e-47	4.31e-50	0.00e+00	4.01e-50	2.45e-50	2.69e-56	0.00e+00	1.93e-48
BA-142	4.12e-81	4.24e-84	0.00e+00	3.58e-84	2.40e-84	0.00e+00	0.00e+00	2.59e-82
LA-140	5.42e-01	2.73e-01	0.00e+00	0.00e+00	0.00e+00	2.01e+04	0.00e+00	7.22e-02
LA-142	2.29e-12	1.04e-12	0.00e+00	0.00e+00	0.00e+00	7.62e-09	0.00e+00	2.60e-13
CE-141	5.81e+02	3.93e+02	0.00e+00	1.83e+02	0.00e+00	1.50e+06	0.00e+00	4.46e+01
CE-143	5.00e+00	3.69e+03	0.00e+00	1.63e+00	0.00e+00	1.38e+05	0.00e+00	4.09e-01
CE-144	4.29e+04	1.79e+04	0.00e+00	1.06e+04	0.00e+00	1.45e+07	0.00e+00	2.31e+03
PR-143	1.89e+01	7.60e+00	0.00e+00	4.39e+00	0.00e+00	8.30e+04	0.00e+00	9.39e-01
PR-144	8.25e-55	3.43e-55	0.00e+00	1.93e-55	0.00e+00	1.19e-61	0.00e+00	4.19e-56
ND-147	1.13e+01	1.31e+01	0.00e+00	7.64e+00	0.00e+00	6.27e+04	0.00e+00	7.82e-01
W-187	7.83e+02	6.55e+02	0.00e+00	0.00e+00	0.00e+00	2.15e+05	0.00e+00	2.29e+02
NP-239	4.41e-01	4.34e-02	0.00e+00	1.35e-01	0.00e+00	8.90e+03	0.00e+00	2.39e-02
PU-239	3.36e+06	4.04e+05	0.00e+00	3.76e+05	0.00e+00	3.09e+05	0.00e+00	8.86e+04
U-235	3.71e+08	0.00e+00	0.00e+00	8.67e+07	0.00e+00	3.62e+07	0.00e+00	2.25e+07

DOSE FACTORS: RADIONUCLIDES OTHER THAN NOBLE GASES
(Ref.3.9 Ch. 5.2, 5.3)

Units: Airborne Pathways & Tritium Ingestion: (mrem/yr)/(µCi/m^3))
Deposition Pathways: (m^2 * (mrem/yr)/(µCi/sec)
AgeGroup: ADULT
Pathway: Ground Plane Deposition (GPD)

Nuclide	Bone	Liver	Thyroid	Kidney	Lung	GI-Lli	Skin	TB
NA-24	1.20e+07	1.20e+07	1.20e+07	1.20e+07	1.20e+07	1.20e+07	1.39e+07	1.20e+07
CR-51	4.66e+06	4.66e+06	4.66e+06	4.66e+06	4.66e+06	4.66e+06	5.51e+06	4.66e+06
MN-54	1.39e+09	1.39e+09	1.39e+09	1.39e+09	1.39e+09	1.39e+09	1.63e+09	1.39e+09
MN-56	9.04e+05	9.04e+05	9.04e+05	9.04e+05	9.04e+05	9.04e+05	1.07e+06	9.04e+05
FE-59	2.72e+08	2.72e+08	2.72e+08	2.72e+08	2.72e+08	2.72e+08	3.20e+08	2.72e+08
CO-58	3.79e+08	3.79e+08	3.79e+08	3.79e+08	3.79e+08	3.79e+08	4.44e+08	3.79e+08
CO-60	2.15e+10	2.15e+10	2.15e+10	2.15e+10	2.15e+10	2.15e+10	2.15e+10	2.15e+10
NI-65	2.97e+05	2.97e+05	2.97e+05	2.97e+05	2.97e+05	2.97e+05	3.45e+05	2.97e+05
CU-64	6.07e+05	6.07e+05	6.07e+05	6.07e+05	6.07e+05	6.07e+05	6.88e+05	6.07e+05
ZN-65	7.47e+08	7.47e+08	7.47e+08	7.47e+08	7.47e+08	7.47e+08	8.60e+08	7.47e+08
BR-83	4.87e+03	4.87e+03	4.87e+03	4.87e+03	4.87e+03	4.87e+03	7.08e+03	4.87e+03
BR-84	2.03e+05	2.03e+05	2.03e+05	2.03e+05	2.03e+05	2.03e+05	2.36e+05	2.03e+05
RB-86	8.99e+06	8.99e+06	8.99e+06	8.99e+06	8.99e+06	8.99e+06	1.03e+07	8.99e+06
RB-88	3.31e+04	3.31e+04	3.31e+04	3.31e+04	3.31e+04	3.31e+04	3.78e+04	3.31e+04
RB-89	1.21e+05	1.21e+05	1.21e+05	1.21e+05	1.21e+05	1.21e+05	1.45e+05	1.21e+05
SR-89	2.16e+04	2.16e+04	2.16e+04	2.16e+04	2.16e+04	2.16e+04	2.51e+04	2.16e+04
SR-91	2.15e+06	2.15e+06	2.15e+06	2.15e+06	2.15e+06	2.15e+06	2.51e+06	2.15e+06
SR-92	7.77e+05	7.77e+05	7.77e+05	7.77e+05	7.77e+05	7.77e+05	8.63e+05	7.77e+05
Y-90	4.49e+03	4.49e+03	4.49e+03	4.49e+03	4.49e+03	4.49e+03	5.31e+03	4.49e+03
Y-91	1.07e+06	1.07e+06	1.07e+06	1.07e+06	1.07e+06	1.07e+06	1.21e+06	1.06e+06
Y-91M	1.00e+05	1.00e+05	1.00e+05	1.00e+05	1.00e+05	1.00e+05	1.16e+05	1.00e+05
Y-92	1.80e+05	1.80e+05	1.80e+05	1.80e+05	1.80e+05	1.80e+05	2.14e+05	1.80e+05
Y-93	1.83e+05	1.83e+05	1.83e+05	1.83e+05	1.83e+05	1.83e+05	2.51e+05	1.83e+05
ZR-95	2.45e+08	2.45e+08	2.45e+08	2.45e+08	2.45e+08	2.45e+08	2.84e+08	2.45e+08
ZR-97	2.96e+06	2.96e+06	2.96e+06	2.96e+06	2.96e+06	2.96e+06	3.45e+06	2.96e+06
NB-95	1.37e+08	1.37e+08	1.37e+08	1.37e+08	1.37e+08	1.37e+08	1.61e+08	1.37e+08
MO-99	4.00e+06	4.00e+06	4.00e+06	4.00e+06	4.00e+06	4.00e+06	4.63e+06	4.00e+06
TC-99M	1.84e+05	1.84e+05	1.84e+05	1.84e+05	1.84e+05	1.84e+05	2.11e+05	1.84e+05
TC-101	2.04e+04	2.04e+04	2.04e+04	2.04e+04	2.04e+04	2.04e+04	2.26e+04	2.04e+04
RU-103	1.08e+08	1.08e+08	1.08e+08	1.08e+08	1.08e+08	1.08e+08	1.26e+08	1.08e+08
RU-105	6.37e+05	6.37e+05	6.37e+05	6.37e+05	6.37e+05	6.37e+05	7.21e+05	6.37e+05
RU-106	4.22e+08	4.22e+08	4.22e+08	4.22e+08	4.22e+08	4.22e+08	5.07e+08	4.22e+08
AG-110M	3.44e+09	3.44e+09	3.44e+09	3.44e+09	3.44e+09	3.44e+09	4.01e+09	3.44e+09
TE-125M	1.55e+06	1.55e+06	1.55e+06	1.55e+06	1.55e+06	1.55e+06	2.13e+06	1.55e+06
TE-127	2.98e+03	2.98e+03	2.98e+03	2.98e+03	2.98e+03	2.98e+03	3.28e+03	2.98e+03
TE-127M	9.17e+04	9.17e+04	9.17e+04	9.17e+04	9.17e+04	9.17e+04	1.08e+05	9.17e+04
TE-129	2.62e+04	2.62e+04	2.62e+04	2.62e+04	2.62e+04	2.62e+04	3.10e+04	2.62e+04
TE-129M	1.98e+07	1.98e+07	1.98e+07	1.98e+07	1.98e+07	1.98e+07	2.31e+07	1.98e+07

DOSE FACTORS: RADIONUCLIDES OTHER THAN NOBLE GASES
(Ref.3.9 Ch. 5.2, 5.3)

Units: Airborne Pathways & Tritium Ingestion: (mrem/yr)/(µCi/m^3))
Deposition Pathways: (m^2 * (mrem/yr)/(µCi/sec)
AgeGroup: ADULT
Pathway: Ground Plane Deposition (GPD)

Nuclide	Bone	Liver	Thyroid	Kidney	Lung	GI-Lli	Skin	TB
TE-131	2.92e+04	2.92e+04	2.92e+04	2.92e+04	2.92e+04	2.92e+04	3.45e+07	2.92e+04
TE-131M	8.03e+06	8.03e+06	8.03e+06	8.03e+06	8.03e+06	8.03e+06	9.46e+06	8.03e+06
TE-132	4.24e+06	4.24e+06	4.24e+06	4.24e+06	4.24e+06	4.24e+06	4.98e+06	4.24e+06
I-130	5.51e+06	5.51e+06	5.51e+06	5.51e+06	5.51e+06	5.51e+06	6.69e+06	5.51e+06
I-131	1.72e+07	1.72e+07	1.72e+07	1.72e+07	1.72e+07	1.72e+07	2.09e+07	1.72e+07
I-132	1.25e+06	1.25e+06	1.25e+06	1.25e+06	1.25e+06	1.25e+06	1.47e+06	1.25e+06
I-133	2.45e+06	2.45e+06	2.45e+06	2.45e+06	2.45e+06	2.45e+06	2.98e+06	2.45e+06
I-134	4.47e+05	4.47e+05	4.47e+05	4.47e+05	4.47e+05	4.47e+05	5.31e+05	4.47e+05
I-135	2.53e+06	2.53e+06	2.53e+06	2.53e+06	2.53e+06	2.53e+06	2.95e+06	2.53e+06
CS-134	6.86e+09	6.86e+09	6.86e+09	6.86e+09	6.86e+09	6.86e+09	8.00e+09	6.86e+09
CS-136	1.51e+08	1.51e+08	1.51e+08	1.51e+08	1.51e+08	1.51e+08	1.71e+08	1.51e+08
CS-137	1.03e+10	1.03e+10	1.03e+10	1.03e+10	1.03e+10	1.03e+10	1.20e+10	1.03e+10
CS-138	3.59e+05	3.59e+05	3.59e+05	3.59e+05	3.59e+05	3.59e+05	4.10e+05	3.59e+05
BA-139	1.06e+05	1.06e+05	1.06e+05	1.06e+05	1.06e+05	1.06e+05	1.19e+05	1.06e+05
BA-140	2.05e+07	2.05e+07	2.05e+07	2.05e+07	2.05e+07	2.05e+07	2.35e+07	2.05e+07
BA-141	4.17e+04	4.17e+04	4.17e+04	4.17e+04	4.17e+04	4.17e+04	4.75e+04	4.17e+04
BA-142	4.49e+04	4.49e+04	4.49e+04	4.49e+04	4.49e+04	4.49e+04	5.11e+04	4.49e+04
LA-140	1.92e+07	1.92e+07	1.92e+07	1.92e+07	1.92e+07	1.92e+07	2.18e+07	1.92e+07
LA-142	7.60e+05	7.60e+05	7.60e+05	7.60e+05	7.60e+05	7.60e+05	9.12e+05	7.60e+05
CE-141	1.37e+07	1.37e+07	1.37e+07	1.37e+07	1.37e+07	1.37e+07	1.54e+07	1.37e+07
CE-143	2.31e+06	2.31e+06	2.31e+06	2.31e+06	2.31e+06	2.31e+06	2.63e+06	2.31e+06
CE-144	6.95e+07	6.95e+07	6.95e+07	6.95e+07	6.95e+07	6.95e+07	8.04e+07	6.95e+07
PR-144	1.84e+03	1.84e+03	1.84e+03	1.84e+03	1.84e+03	1.84e+03	2.11e+03	1.84e+03
ND-147	8.39e+06	8.39e+06	8.39e+06	8.39e+06	8.39e+06	8.39e+06	1.01e+07	8.39e+06
W-187	2.35e+06	2.35e+06	2.35e+06	2.35e+06	2.35e+06	2.35e+06	2.73e+06	2.35e+06
NP-239	1.71e+06	1.71e+06	1.71e+06	1.71e+06	1.71e+06	1.71e+06	1.98e+06	1.71e+06
PU-239	2.29e+06	2.29e+06	2.29e+06	2.29e+06	2.29e+06	2.29e+06	2.23e+07	2.29e+07
U-235	9.28e+09	9.28e+09	9.28e+09	9.28e+09	9.28e+09	9.28e+09	1.16e+10	9.28e+09

DOSE FACTORS: RADIONUCLIDES OTHER THAN NOBLE GASES
(Ref.3.9 Ch. 5.2, 5.3)

Units: Airborne Pathways & Tritium Ingestion: (mrem/yr)/(µCi/m^3))
Deposition Pathways: (m^2 * (mrem/yr)/(µCi/sec)
AgeGroup: ADULT
Pathway: Inhalation (INHL)

Nuclide	Bone	Liver	Thyroid	Kidney	Lung	GI-Lli	Skin	TB
H-3	0.00e+00	1.26e+03	1.26e+03	1.26e+03	1.26e+03	1.26e+03	0.00e+00	1.26e+03
C-14	1.82e+04	3.41e+03	3.41e+03	3.41e+03	3.41e+03	3.41e+03	0.00e+00	3.41e+03
NA-24	1.02e+04	1.02e+04	1.02e+04	1.02e+04	1.02e+04	1.02e+04	0.00e+00	1.02e+04
P-32	1.32e+06	7.71e+04	0.00e+00	0.00e+00	0.00e+00	8.64e+04	0.00e+00	5.01e+04
CR-51	0.00e+00	0.00e+00	5.95e+01	2.28e+01	1.44e+04	3.32e+03	0.00e+00	1.00e+02
MN-54	0.00e+00	3.96e+04	0.00e+00	9.84e+03	1.40e+06	7.74e+04	0.00e+00	6.30e+03
MN-56	0.00e+00	1.24e+00	0.00e+00	1.30e+00	9.44e+03	2.02e+04	0.00e+00	1.83e-01
FE-55	2.46e+04	1.70e+04	0.00e+00	0.00e+00	7.21e+04	6.03e+03	0.00e+00	3.94e+03
FE-59	1.18e+04	2.78e+04	0.00e+00	0.00e+00	1.02e+06	1.88e+05	0.00e+00	1.06e+04
CO-58	0.00e+00	1.58e+03	0.00e+00	0.00e+00	9.28e+05	1.06e+05	0.00e+00	2.07e+03
CO-60	0.00e+00	1.15e+04	0.00e+00	0.00e+00	5.97e+06	2.85e+05	0.00e+00	1.48e+04
NI-63	4.32e+05	3.14e+04	0.00e+00	0.00e+00	1.78e+05	1.34e+04	0.00e+00	1.45e+04
NI-65	1.54e+00	2.10e-01	0.00e+00	0.00e+00	5.60e+03	1.23e+04	0.00e+00	9.12e-02
CU-64	0.00e+00	1.46e+00	0.00e+00	4.62e+00	6.78e+03	4.90e+04	0.00e+00	6.15e-01
ZN-65	3.24e+04	1.03e+05	0.00e+00	6.90e+04	8.64e+05	5.34e+04	0.00e+00	4.66e+04
ZN-69	3.38e-02	6.51e-02	0.00e+00	4.22e-02	9.20e+02	1.63e+01	0.00e+00	4.52e-03
BR-83	0.00e+00	0.00e+00	0.00e+00	0.00e+00	0.00e+00	2.32e+02	0.00e+00	2.41e+02
BR-84	0.00e+00	0.00e+00	0.00e+00	0.00e+00	0.00e+00	1.64e-03	0.00e+00	3.13e+02
BR-85	0.00e+00	0.00e+00	0.00e+00	0.00e+00	0.00e+00	0.00e+00	0.00e+00	1.28e+01
RB-86	0.00e+00	1.35e+05	0.00e+00	0.00e+00	0.00e+00	1.66e+04	0.00e+00	5.90e+04
RB-88	0.00e+00	3.87e+02	0.00e+00	0.00e+00	0.00e+00	3.34e-09	0.00e+00	1.93e+02
RB-89	0.00e+00	2.56e+02	0.00e+00	0.00e+00	0.00e+00	9.28e-12	0.00e+00	1.70e+02
SR-89	3.04e+05	0.00e+00	0.00e+00	0.00e+00	1.40e+06	3.50e+05	0.00e+00	8.72e+03
SR-90	9.92e+07	0.00e+00	0.00e+00	0.00e+00	9.60e+06	7.22e+05	0.00e+00	6.10e+06
SR-91	6.19e+01	0.00e+00	0.00e+00	0.00e+00	3.65e+04	1.91e+05	0.00e+00	2.50e+00
SR-92	6.74e+00	0.00e+00	0.00e+00	0.00e+00	1.65e+04	4.30e+04	0.00e+00	2.91e-01
Y-90	2.09e+03	0.00e+00	0.00e+00	0.00e+00	1.70e+05	5.06e+05	0.00e+00	5.61e+01
Y-91	4.62e+05	0.00e+00	0.00e+00	0.00e+00	1.70e+06	3.85e+05	0.00e+00	1.24e+04
Y-91M	2.61e-01	0.00e+00	0.00e+00	0.00e+00	1.92e+03	1.33e+00	0.00e+00	1.02e-02
Y-92	1.03e+01	0.00e+00	0.00e+00	0.00e+00	1.57e+04	7.35e+04	0.00e+00	3.02e-01
Y-93	9.44e+01	0.00e+00	0.00e+00	0.00e+00	4.85e+04	4.22e+05	0.00e+00	2.61e+00
ZR-95	1.07e+05	3.44e+04	0.00e+00	5.42e+04	1.77e+06	1.50e+05	0.00e+00	2.33e+04
ZR-97	9.68e+01	1.96e+01	0.00e+00	2.97e+01	7.87e+04	5.23e+05	0.00e+00	9.04e+00
NB-95	1.41e+04	7.82e+03	0.00e+00	7.74e+03	5.05e+05	1.04e+05	0.00e+00	4.21e+03
MO-99	0.00e+00	1.21e+02	0.00e+00	2.91e+02	9.12e+04	2.48e+05	0.00e+00	2.30e+01
TC-99M	1.03e-03	2.91e-03	0.00e+00	4.42e-02	7.64e+02	4.16e+03	0.00e+00	3.70e-02
TC-101	4.18e-05	6.02e-05	0.00e+00	1.08e-03	3.99e+02	1.09e-11	0.00e+00	5.90e-04
RU-103	1.53e+03	0.00e+00	0.00e+00	5.83e+03	5.05e+05	1.10e+05	0.00e+00	6.58e+02

DOSE FACTORS: RADIONUCLIDES OTHER THAN NOBLE GASES
(Ref.3.9 Ch. 5.2, 5.3)

Units: Airborne Pathways & Tritium Ingestion: (mrem/yr)/(µCi/m^3))
Deposition Pathways: (m^2 * (mrem/yr)/(µCi/sec)
AgeGroup: ADULT
Pathway: Inhalation (INHL)

Nuclide	Bone	Liver	Thyroid	Kidney	Lung	GI-Lli	Skin	TB
RU-105	7.90e-01	0.00e+00	0.00e+00	1.02e+00	1.10e+04	4.82e+04	0.00e+00	3.11e-01
RU-106	6.91e+04	0.00e+00	0.00e+00	1.34e+05	9.36e+06	9.12e+05	0.00e+00	8.72e+03
AG-110M	1.08e+04	1.00e+04	0.00e+00	1.97e+04	4.63e+06	3.02e+05	0.00e+00	5.94e+03
TE-125M	3.42e+03	1.58e+03	1.05e+03	1.24e+04	3.14e+05	7.06e+04	0.00e+00	4.67e+02
TE-127	1.40e+00	6.42e-01	1.06e+00	5.10e+00	6.51e+03	5.74e+04	0.00e+00	3.10e-01
TE-127M	1.26e+04	5.77e+03	3.29e+03	4.58e+04	9.60e+05	1.50e+05	0.00e+00	1.57e+03
TE-129	4.98e-02	2.39e-02	3.90e-02	1.87e-01	1.94e+03	1.57e+02	0.00e+00	1.24e-02
TE-129M	9.76e+03	4.67e+03	3.44e+03	3.66e+04	1.16e+06	3.83e+05	0.00e+00	1.58e+03
TE-131	1.11e-02	5.95e-03	9.36e-03	4.37e-02	1.39e+03	1.84e+01	0.00e+00	3.59e-03
TE-131M	6.99e+01	4.36e+01	5.50e+01	3.09e+02	1.46e+05	5.56e+05	0.00e+00	2.90e+01
TE-132	2.60e+02	2.15e+02	1.90e+02	1.46e+03	2.88e+05	5.10e+05	0.00e+00	1.62e+02
I-130	4.58e+03	1.34e+04	1.14e+06	2.09e+04	0.00e+00	7.69e+03	0.00e+00	5.28e+03
I-131	2.52e+04	3.58e+04	1.19e+07	6.13e+04	0.00e+00	6.28e+03	0.00e+00	2.05e+04
I-132	1.16e+03	3.26e+03	1.14e+05	5.18e+03	0.00e+00	4.06e+02	0.00e+00	1.16e+03
I-133	8.64e+03	1.48e+04	2.15e+06	2.58e+04	0.00e+00	8.88e+03	0.00e+00	4.52e+03
I-134	6.44e+02	1.73e+03	2.98e+04	2.75e+03	0.00e+00	1.01e+00	0.00e+00	6.15e+02
I-135	2.68e+03	6.98e+03	4.48e+05	1.11e+04	0.00e+00	5.25e+03	0.00e+00	2.57e+03
CS-134	3.73e+05	8.48e+05	0.00e+00	2.87e+05	9.76e+04	1.04e+04	0.00e+00	7.28e+05
CS-136	3.90e+04	1.46e+05	0.00e+00	8.56e+04	1.20e+04	1.17e+04	0.00e+00	1.10e+05
CS-137	4.78e+05	6.21e+05	0.00e+00	2.22e+05	7.52e+04	8.40e+03	0.00e+00	4.28e+05
CS-138	3.31e+02	6.21e+02	0.00e+00	4.80e+02	4.86e+01	1.86e-03	0.00e+00	3.24e+02
BA-139	9.36e-01	6.66e-04	0.00e+00	6.22e-04	3.76e+03	8.96e+02	0.00e+00	2.74e-02
BA-140	3.90e+04	4.90e+01	0.00e+00	1.67e+01	1.27e+06	2.18e+05	0.00e+00	2.57e+03
BA-141	1.00e-01	7.53e-05	0.00e+00	7.00e-05	1.94e+03	1.16e-07	0.00e+00	3.36e-03
BA-142	2.63e-02	2.70e-05	0.00e+00	2.29e-05	1.19e+03	1.57e-16	0.00e+00	1.66e-03
LA-140	3.44e+02	1.74e+02	0.00e+00	0.00e+00	1.36e+05	4.58e+05	0.00e+00	4.58e+01
LA-142	6.83e-01	3.10e-01	0.00e+00	0.00e+00	6.33e+03	2.11e+03	0.00e+00	7.72e-02
CE-141	1.99e+04	1.35e+04	0.00e+00	6.26e+03	3.62e+05	1.20e+05	0.00e+00	1.53e+03
CE-143	1.86e+02	1.38e+02	0.00e+00	6.08e+01	7.98e+04	2.26e+05	0.00e+00	1.53e+01
CE-144	3.43e+06	1.43e+06	0.00e+00	8.48e+05	7.78e+06	8.16e+05	0.00e+00	1.84e+05
PR-143	9.36e+03	3.75e+03	0.00e+00	2.16e+03	2.81e+05	2.00e+05	0.00e+00	4.64e+02
PR-144	3.01e-02	1.25e-02	0.00e+00	7.05e-03	1.02e+03	2.15e-08	0.00e+00	1.53e-03
ND-147	5.27e+03	6.10e+03	0.00e+00	3.56e+03	2.21e+05	1.73e+05	0.00e+00	3.65e+02
W-187	8.48e+00	7.08e+00	0.00e+00	0.00e+00	2.90e+04	1.55e+05	0.00e+00	2.48e+00
NP-239	2.30e+02	2.03e+02	0.00e+00	7.00e+01	3.76e+04	1.19e+05	0.00e+00	1.24e+01
PU-239	1.33e+10	8.56e+09	0.00e+00	2.64e+09	1.38e+09	3.30e+05	0.00e+00	6.20e+08
U-235	8.00e+07	0.00e+00	0.00e+00	1.87e+07	3.92e+08	3.87e+06	0.00e+00	4.86e+06

DOSE FACTORS: RADIONUCLIDES OTHER THAN NOBLE GASES
(Ref.3.9 Ch. 5.2, 5.3)

Units: Airborne Pathways & Tritium Ingestion: (mrem/yr)/(µCi/m^3))
Deposition Pathways: (m^2 * (mrem/yr)/(µCi/sec)
AgeGroup: ADULT
Pathway: Grs/Cow/Meat (CMEAT)

Nuclide	Bone	Liver	Thyroid	Kidney	Lung	GI-Lli	Skin	TB
H-3	0.00e+00	3.25e+02	3.25e+02	3.25e+02	3.25e+02	3.25e+02	0.00e+00	3.25e+02
C-14	2.41e+08	4.83e+07	4.83e+07	4.83e+07	4.83e+07	4.83e+07	0.00e+00	4.83e+07
NA-24	1.40e-03	1.40e-03	1.40e-03	1.40e-03	1.40e-03	1.40e-03	0.00e+00	1.40e-03
P-32	7.25e+08	2.90e+08	0.00e+00	0.00e+00	0.00e+00	5.24e+08	0.00e+00	1.80e+08
CR-51	0.00e+00	0.00e+00	4.22e+03	1.55e+03	9.36e+03	1.77e+06	0.00e+00	7.05e+03
MN-54	0.00e+00	9.18e+06	0.00e+00	2.73e+06	0.00e+00	2.81e+07	0.00e+00	1.75e+06
MN-56	0.00e+00	1.81e-53	0.00e+00	2.30e-53	0.00e+00	5.77e-52	0.00e+00	3.21e-54
FE-55	2.93e+08	2.03e+08	0.00e+00	0.00e+00	1.13e+08	1.16e+08	0.00e+00	4.73e+07
FE-59	2.66e+08	6.24e+08	0.00e+00	0.00e+00	1.75e+08	2.08e+09	0.00e+00	2.39e+08
CO-58	0.00e+00	1.82e+07	0.00e+00	0.00e+00	0.00e+00	3.70e+08	0.00e+00	4.09e+07
CO-60	0.00e+00	7.52e+07	0.00e+00	0.00e+00	0.00e+00	1.41e+09	0.00e+00	1.66e+08
NI-63	1.89e+10	1.31e+09	0.00e+00	0.00e+00	0.00e+00	2.73e+08	0.00e+00	6.34e+08
NI-65	2.69e-52	3.50e-53	0.00e+00	0.00e+00	0.00e+00	8.87e-52	0.00e+00	1.60e-53
CU-64	0.00e+00	2.81e-07	0.00e+00	7.09e-07	0.00e+00	2.40e-05	0.00e+00	1.32e-07
ZN-65	3.56e+08	1.13e+09	0.00e+00	7.57e+08	0.00e+00	7.13e+08	0.00e+00	5.12e+08
RB-86	0.00e+00	4.88e+08	0.00e+00	0.00e+00	0.00e+00	9.62e+07	0.00e+00	2.27e+08
SR-89	3.02e+08	0.00e+00	0.00e+00	0.00e+00	0.00e+00	4.84e+07	0.00e+00	8.66e+06
SR-90	1.24e+10	0.00e+00	0.00e+00	0.00e+00	0.00e+00	3.59e+08	0.00e+00	3.05e+09
SR-91	1.59e-10	0.00e+00	0.00e+00	0.00e+00	0.00e+00	7.59e-10	0.00e+00	6.44e-12
SR-92	1.39e-49	0.00e+00	0.00e+00	0.00e+00	0.00e+00	2.76e-48	0.00e+00	6.03e-51
Y-90	1.08e+02	0.00e+00	0.00e+00	0.00e+00	0.00e+00	1.15e+06	0.00e+00	2.91e+00
Y-91	1.13e+06	0.00e+00	0.00e+00	0.00e+00	0.00e+00	6.23e+08	0.00e+00	3.03e+04
Y-92	1.73e-39	0.00e+00	0.00e+00	0.00e+00	0.00e+00	3.02e-35	0.00e+00	5.04e-41
Y-93	4.91e-12	0.00e+00	0.00e+00	0.00e+00	0.00e+00	1.56e-07	0.00e+00	1.36e-13
ZR-95	1.87e+06	6.01e+05	0.00e+00	9.43e+05	0.00e+00	1.90e+09	0.00e+00	4.07e+05
ZR-97	2.12e-05	4.28e-06	0.00e+00	6.47e-06	0.00e+00	1.33e+00	0.00e+00	1.96e-06
NB-95	2.30e+06	1.28e+06	0.00e+00	1.26e+06	0.00e+00	7.76e+09	0.00e+00	6.87e+05
MO-99	0.00e+00	1.01e+05	0.00e+00	2.28e+05	0.00e+00	2.33e+05	0.00e+00	1.92e+04
TC-99M	4.80e-21	1.36e-20	0.00e+00	2.06e-19	6.65e-21	8.03e-18	0.00e+00	1.73e-19
RU-103	1.05e+08	0.00e+00	0.00e+00	4.02e+08	0.00e+00	1.23e+10	0.00e+00	4.53e+07
RU-105	6.40e-28	0.00e+00	0.00e+00	8.27e-27	0.00e+00	3.91e-25	0.00e+00	2.53e-28
RU-106	2.80e+09	0.00e+00	0.00e+00	5.40e+09	0.00e+00	1.81e+11	0.00e+00	3.54e+08
AG-110M	6.68e+06	6.18e+06	0.00e+00	1.22e+07	0.00e+00	2.52e+09	0.00e+00	3.67e+06
TE-125M	3.59e+08	1.30e+08	1.08e+08	1.46e+09	0.00e+00	1.43e+09	0.00e+00	4.81e+07
TE-127	2.23e-10	8.00e-11	1.65e-10	9.08e-10	0.00e+00	1.76e-08	0.00e+00	4.82e-11
TE-127M	1.12e+09	3.99e+08	2.85e+08	4.53e+09	0.00e+00	3.74e+09	0.00e+00	1.36e+08
TE-129M	1.14e+09	4.23e+08	3.90e+08	4.74e+09	0.00e+00	5.71e+09	0.00e+00	1.80e+08
TE-131M	4.58e+02	2.24e+02	3.55e+02	2.27e+03	0.00e+00	2.22e+04	0.00e+00	1.87e+02

DOSE FACTORS: RADIONUCLIDES OTHER THAN NOBLE GASES
(Ref.3.9 Ch. 5.2, 5.3)

Units: Airborne Pathways & Tritium Ingestion: (mrem/yr)/(µCi/m^3))
Deposition Pathways: (m^2 * (mrem/yr)/(µCi/sec)
AgeGroup: ADULT
Pathway: Grs/Cow/Meat (CMEAT)

Nuclide	Bone	Liver	Thyroid	Kidney	Lung	GI-Lli	Skin	TB
TE-132	1.43e+06	9.24e+05	1.02e+06	8.90e+06	0.00e+00	4.37e+07	0.00e+00	8.67e+05
I-130	1.09e-06	3.23e-06	2.73e-04	5.04e-06	0.00e+00	2.78e-06	0.00e+00	1.27e-06
I-131	5.38e+06	7.70e+06	2.52e+09	1.32e+07	0.00e+00	2.03e+06	0.00e+00	4.41e+06
I-132	4.25e-59	1.14e-58	3.98e-57	1.81e-58	0.00e+00	2.13e-59	0.00e+00	3.98e-59
I-133	1.87e-01	3.25e-01	4.77e+01	5.67e-01	0.00e+00	2.92e-01	0.00e+00	9.90e-02
I-135	2.37e-17	6.21e-17	4.09e-15	9.96e-17	0.00e+00	7.01e-17	0.00e+00	2.29e-17
CS-134	6.58e+08	1.57e+09	0.00e+00	5.06e+08	1.68e+08	2.74e+07	0.00e+00	1.28e+09
CS-136	1.21e+07	4.77e+07	0.00e+00	2.65e+07	3.63e+06	5.41e+06	0.00e+00	3.43e+07
CS-137	8.72e+08	1.19e+09	0.00e+00	4.05e+08	1.35e+08	2.31e+07	0.00e+00	7.81e+08
BA-140	2.88e+07	3.62e+04	0.00e+00	1.23e+04	2.07e+04	5.93e+07	0.00e+00	1.89e+06
LA-140	3.75e-02	1.89e-02	0.00e+00	0.00e+00	0.00e+00	1.39e+03	0.00e+00	5.00e-03
LA-142	4.59e-92	2.09e-92	0.00e+00	0.00e+00	0.00e+00	1.52e-88	0.00e+00	5.20e-93
CE-141	1.41e+04	9.51e+03	0.00e+00	4.42e+03	0.00e+00	3.63e+07	0.00e+00	1.08e+03
CE-143	2.04e-02	1.51e+01	0.00e+00	6.62e-03	0.00e+00	5.63e+02	0.00e+00	1.67e-03
CE-144	1.46e+06	6.09e+05	0.00e+00	3.62e+05	0.00e+00	4.93e+08	0.00e+00	7.83e+04
PR-143	2.10e+04	8.42e+03	0.00e+00	4.86e+03	0.00e+00	9.20e+07	0.00e+00	1.04e+03
ND-147	7.08e+03	8.19e+03	0.00e+00	4.79e+03	0.00e+00	3.93e+07	0.00e+00	4.90e+02
W-187	2.11e-02	1.76e-02	0.00e+00	0.00e+00	0.00e+00	5.77e+00	0.00e+00	6.16e-03
NP-239	2.61e-01	2.57e-02	0.00e+00	8.01e-02	0.00e+00	5.27e+03	0.00e+00	1.42e-02
PU-239	2.78e+07	3.34e+06	0.00e+00	3.11e+06	0.00e+00	2.56e+06	0.00e+00	7.33e+05
U-235	7.47e+08	0.00e+00	0.00e+00	1.74e+08	0.00e+00	7.28e+07	0.00e+00	4.53e+07

DOSE FACTORS: RADIONUCLIDES OTHER THAN NOBLE GASES
(Ref.3.9 Ch. 5.2, 5.3)

Units: Airborne Pathways & Tritium Ingestion: (mrem/yr)/(µCi/m^3))
Deposition Pathways: (m^2 * (mrem/yr)/(µCi/sec)
AgeGroup: ADULT
Pathway: Grs/Cow/Milk (CMILK)

Nuclide	Bone	Liver	Thyroid	Kidney	Lung	GI-Lli	Skin	TB
H-3	0.00e+00	7.63e+02	7.63e+02	7.63e+02	7.63e+02	7.63e+02	0.00e+00	7.63e+02
C-14	2.63e+08	5.27e+07	5.27e+07	5.27e+07	5.27e+07	5.27e+07	0.00e+00	5.27e+07
NA-24	2.45e+06	2.45e+06	2.45e+06	2.45e+06	2.45e+06	2.45e+06	0.00e+00	2.45e+06
P-32	2.66e+09	1.06e+09	0.00e+00	0.00e+00	0.00e+00	1.92e+09	0.00e+00	6.61e+08
CR-51	0.00e+00	0.00e+00	1.71e+04	6.30e+03	3.79e+04	7.19e+06	0.00e+00	2.86e+04
MN-54	0.00e+00	8.41e+06	0.00e+00	2.50e+06	0.00e+00	2.58e+07	0.00e+00	1.61e+06
MN-56	0.00e+00	4.23e-03	0.00e+00	5.37e-03	0.00e+00	1.35e-01	0.00e+00	7.50e-04
FE-55	2.51e+07	1.74e+07	0.00e+00	0.00e+00	9.68e+06	9.95e+06	0.00e+00	4.05e+06
FE-59	2.97e+07	6.98e+07	0.00e+00	0.00e+00	1.95e+07	2.33e+08	0.00e+00	2.68e+07
CO-58	0.00e+00	4.71e+06	0.00e+00	0.00e+00	0.00e+00	9.56e+07	0.00e+00	1.06e+07
CO-60	0.00e+00	1.64e+07	0.00e+00	0.00e+00	0.00e+00	3.08e+08	0.00e+00	3.62e+07
NI-63	6.73e+09	4.67e+08	0.00e+00	0.00e+00	0.00e+00	9.74e+07	0.00e+00	2.26e+08
NI-65	3.77e-01	4.89e-02	0.00e+00	0.00e+00	0.00e+00	1.24e+00	0.00e+00	2.23e-02
CU-64	0.00e+00	2.39e+04	0.00e+00	6.03e+04	0.00e+00	2.04e+06	0.00e+00	1.12e+04
ZN-65	1.37e+09	4.37e+09	0.00e+00	2.92e+09	0.00e+00	2.75e+09	0.00e+00	1.97e+09
ZN-69	2.20e-12	4.20e-12	0.00e+00	2.73e-12	0.00e+00	6.31e-13	0.00e+00	2.92e-13
BR-83	0.00e+00	0.00e+00	0.00e+00	0.00e+00	0.00e+00	1.43e-01	0.00e+00	9.90e-02
BR-84	0.00e+00	0.00e+00	0.00e+00	0.00e+00	0.00e+00	1.38e-28	0.00e+00	1.75e-23
RB-86	0.00e+00	2.60e+09	0.00e+00	0.00e+00	0.00e+00	5.12e+08	0.00e+00	1.21e+09
RB-88	0.00e+00	2.49e-45	0.00e+00	0.00e+00	0.00e+00	3.45e-56	0.00e+00	1.32e-45
RB-89	0.00e+00	6.61e-54	0.00e+00	0.00e+00	0.00e+00	3.84e-67	0.00e+00	4.65e-54
SR-89	1.45e+09	0.00e+00	0.00e+00	0.00e+00	0.00e+00	2.33e+08	0.00e+00	4.17e+07
SR-90	4.68e+10	0.00e+00	0.00e+00	0.00e+00	0.00e+00	1.35e+09	0.00e+00	1.15e+10
SR-91	2.91e+04	0.00e+00	0.00e+00	0.00e+00	0.00e+00	1.38e+05	0.00e+00	1.17e+03
SR-92	4.97e-01	0.00e+00	0.00e+00	0.00e+00	0.00e+00	9.84e+00	0.00e+00	2.15e-02
Y-90	7.09e+01	0.00e+00	0.00e+00	0.00e+00	0.00e+00	7.52e+05	0.00e+00	1.90e+00
Y-91	8.59e+03	0.00e+00	0.00e+00	0.00e+00	0.00e+00	4.73e+06	0.00e+00	2.30e+02
Y-91M	6.32e-20	0.00e+00	0.00e+00	0.00e+00	0.00e+00	1.86e-19	0.00e+00	2.45e-21
Y-92	5.65e-05	0.00e+00	0.00e+00	0.00e+00	0.00e+00	9.90e-01	0.00e+00	1.65e-06
Y-93	2.24e-01	0.00e+00	0.00e+00	0.00e+00	0.00e+00	7.12e+03	0.00e+00	6.20e-03
ZR-95	9.43e+02	3.03e+02	0.00e+00	4.75e+02	0.00e+00	9.59e+05	0.00e+00	2.05e+02
ZR-97	4.34e-01	8.77e-02	0.00e+00	1.32e-01	0.00e+00	2.72e+04	0.00e+00	4.01e-02
NB-95	8.26e+04	4.59e+04	0.00e+00	4.54e+04	0.00e+00	2.79e+08	0.00e+00	2.47e+04
MO-99	0.00e+00	2.48e+07	0.00e+00	5.61e+07	0.00e+00	5.75e+07	0.00e+00	4.72e+06
TC-99M	3.35e+00	9.46e+00	0.00e+00	1.44e+02	4.63e+00	5.60e+03	0.00e+00	1.21e+02
TC-101	3.14e-60	4.53e-60	0.00e+00	8.16e-59	2.31e-60	1.36e-71	0.00e+00	4.44e-59
RU-103	1.02e+03	0.00e+00	0.00e+00	3.89e+03	0.00e+00	1.19e+05	0.00e+00	4.39e+02
RU-105	8.66e-04	0.00e+00	0.00e+00	1.12e-02	0.00e+00	5.29e-01	0.00e+00	3.42e-04

DOSE FACTORS: RADIONUCLIDES OTHER THAN NOBLE GASES
(Ref.3.9 Ch. 5.2, 5.3)

Units: Airborne Pathways & Tritium Ingestion: (mrem/yr)/(µCi/m^3))
Deposition Pathways: (m^2 * (mrem/yr)/(µCi/sec)
AgeGroup: ADULT
Pathway: Grs/Cow/Milk (CMILK)

Nuclide	Bone	Liver	Thyroid	Kidney	Lung	GI-Lli	Skin	TB
RU-106	2.04e+04	0.00e+00	0.00e+00	3.94e+04	0.00e+00	1.32e+06	0.00e+00	2.58e+03
AG-110M	5.82e+07	5.39e+07	0.00e+00	1.06e+08	0.00e+00	2.20e+10	0.00e+00	3.20e+07
TE-125M	1.63e+07	5.90e+06	4.90e+06	6.63e+07	0.00e+00	6.51e+07	0.00e+00	2.18e+06
TE-127	6.56e+02	2.36e+02	4.86e+02	2.67e+03	0.00e+00	5.18e+04	0.00e+00	1.42e+02
TE-127M	4.58e+07	1.64e+07	1.17e+07	1.86e+08	0.00e+00	1.54e+08	0.00e+00	5.58e+06
TE-129	2.94e-10	1.10e-10	2.25e-10	1.24e-09	0.00e+00	2.22e-10	0.00e+00	7.16e-11
TE-129M	6.02e+07	2.25e+07	2.07e+07	2.51e+08	0.00e+00	3.03e+08	0.00e+00	9.53e+06
TE-131	4.02e-33	1.68e-33	3.31e-33	1.76e-32	0.00e+00	5.69e-34	0.00e+00	1.27e-33
TE-131M	3.62e+05	1.77e+05	2.80e+05	1.79e+06	0.00e+00	1.76e+07	0.00e+00	1.47e+05
TE-132	2.40e+06	1.56e+06	1.72e+06	1.50e+07	0.00e+00	7.35e+07	0.00e+00	1.46e+06
I-130	2.11e+05	6.22e+05	5.27e+07	9.71e+05	0.00e+00	5.36e+05	0.00e+00	2.45e+05
I-131	1.48e+08	2.12e+08	6.94e+10	3.63e+08	0.00e+00	5.59e+07	0.00e+00	1.21e+08
I-132	8.38e-02	2.24e-01	7.84e+00	3.57e-01	0.00e+00	4.21e-02	0.00e+00	7.84e-02
I-133	1.94e+06	3.37e+06	4.96e+08	5.89e+06	0.00e+00	3.03e+06	0.00e+00	1.03e+06
I-134	1.06e-12	2.89e-12	5.00e-11	4.59e-12	0.00e+00	2.52e-15	0.00e+00	1.03e-12
I-135	6.46e+03	1.69e+04	1.12e+06	2.71e+04	0.00e+00	1.91e+04	0.00e+00	6.25e+03
CS-134	5.65e+09	1.35e+10	0.00e+00	4.35e+09	1.45e+09	2.35e+08	0.00e+00	1.10e+10
CS-136	2.63e+08	1.04e+09	0.00e+00	5.78e+08	7.93e+07	1.18e+08	0.00e+00	7.48e+08
CS-137	7.38e+09	1.01e+10	0.00e+00	3.43e+09	1.14e+09	1.95e+08	0.00e+00	6.61e+09
CS-138	9.85e-24	1.94e-23	0.00e+00	1.43e-23	1.41e-24	8.29e-29	0.00e+00	9.63e-24
BA-139	4.57e-08	3.25e-11	0.00e+00	3.04e-11	1.85e-11	8.10e-08	0.00e+00	1.34e-09
BA-140	2.69e+07	3.38e+04	0.00e+00	1.15e+04	1.93e+04	5.54e+07	0.00e+00	1.76e+06
BA-141	4.76e-46	3.59e-49	0.00e+00	3.34e-49	2.04e-49	2.24e-55	0.00e+00	1.60e-47
BA-142	3.43e-80	3.53e-83	0.00e+00	2.98e-83	2.00e-83	4.83e-98	0.00e+00	2.16e-81
LA-140	4.52e+00	2.28e+00	0.00e+00	0.00e+00	0.00e+00	1.67e+05	0.00e+00	6.02e-01
LA-142	1.91e-11	8.70e-12	0.00e+00	0.00e+00	0.00e+00	6.35e-08	0.00e+00	2.17e-12
CE-141	4.85e+03	3.28e+03	0.00e+00	1.52e+03	0.00e+00	1.25e+07	0.00e+00	3.72e+02
CE-143	4.16e+01	3.08e+04	0.00e+00	1.36e+01	0.00e+00	1.15e+06	0.00e+00	3.41e+00
CE-144	3.58e+05	1.50e+05	0.00e+00	8.87e+04	0.00e+00	1.21e+08	0.00e+00	1.92e+04
PR-143	1.58e+02	6.34e+01	0.00e+00	3.66e+01	0.00e+00	6.92e+05	0.00e+00	7.83e+00
PR-144	6.88e-54	2.86e-54	0.00e+00	1.61e-54	0.00e+00	9.89e-61	0.00e+00	3.49e-55
ND-147	9.42e+01	1.09e+02	0.00e+00	6.36e+01	0.00e+00	5.23e+05	0.00e+00	6.51e+00
W-187	6.53e+03	5.46e+03	0.00e+00	0.00e+00	0.00e+00	1.79e+06	0.00e+00	1.91e+03
NP-239	3.68e+00	3.61e-01	0.00e+00	1.13e+00	0.00e+00	7.42e+04	0.00e+00	1.99e-01
PU-239	2.80e+07	3.37e+06	0.00e+00	3.13e+06	0.00e+00	2.57e+06	0.00e+00	7.38e+05
U-235	3.10e+09	0.00e+00	0.00e+00	7.23e+08	0.00e+00	3.02e+08	0.00e+00	1.88e+08

DOSE FACTORS: RADIONUCLIDES OTHER THAN NOBLE GASES
(Ref.3.9 Ch. 5.2, 5.3)

Units: Airborne Pathways & Tritium Ingestion: (mrem/yr)/(µCi/m^3))
Deposition Pathways: (m^2 * (mrem/yr)/(µCi/sec)
AgeGroup: ADULT
Pathway: Vegetation (VEG)

Nuclide	Bone	Liver	Thyroid	Kidney	Lung	GI-Lli	Skin	TB
H-3	0.00e+00	2.26e+03	2.26e+03	2.26e+03	2.26e+03	2.26e+03	0.00e+00	2.26e+03
C-14	2.28e+08	4.55e+07	4.55e+07	4.55e+07	4.55e+07	4.55e+07	0.00e+00	4.55e+07
NA-24	2.68e+05	2.68e+05	2.68e+05	2.68e+05	2.68e+05	2.68e+05	0.00e+00	2.68e+05
P-32	2.18e+08	8.73e+07	0.00e+00	0.00e+00	0.00e+00	1.58e+08	0.00e+00	5.43e+07
CR-51	0.00e+00	0.00e+00	2.78e+04	1.02e+04	6.16e+04	1.17e+07	0.00e+00	4.64e+04
MN-54	0.00e+00	3.13e+08	0.00e+00	9.31e+07	0.00e+00	9.59e+08	0.00e+00	5.97e+07
MN-56	0.00e+00	1.55e+01	0.00e+00	1.96e+01	0.00e+00	4.93e+02	0.00e+00	2.74e+00
FE-55	2.10e+08	1.45e+08	0.00e+00	0.00e+00	8.08e+07	8.31e+07	0.00e+00	3.38e+07
FE-59	1.26e+08	2.96e+08	0.00e+00	0.00e+00	8.28e+07	9.88e+08	0.00e+00	1.14e+08
CO-58	0.00e+00	3.07e+07	0.00e+00	0.00e+00	0.00e+00	6.23e+08	0.00e+00	6.89e+07
CO-60	0.00e+00	1.67e+08	0.00e+00	0.00e+00	0.00e+00	3.14e+09	0.00e+00	3.69e+08
NI-63	1.04e+10	7.22e+08	0.00e+00	0.00e+00	0.00e+00	1.51e+08	0.00e+00	3.49e+08
NI-65	5.97e+01	7.76e+00	0.00e+00	0.00e+00	0.00e+00	1.97e+02	0.00e+00	3.54e+00
CU-64	0.00e+00	9.15e+03	0.00e+00	2.31e+04	0.00e+00	7.80e+05	0.00e+00	4.30e+03
ZN-65	3.17e+08	1.01e+09	0.00e+00	6.75e+08	0.00e+00	6.36e+08	0.00e+00	4.56e+08
ZN-69	5.08e-06	9.71e-06	0.00e+00	6.31e-06	0.00e+00	1.46e-06	0.00e+00	6.75e-07
BR-83	0.00e+00	0.00e+00	0.00e+00	0.00e+00	0.00e+00	4.34e+00	0.00e+00	3.01e+00
BR-84	0.00e+00	0.00e+00	0.00e+00	0.00e+00	0.00e+00	1.69e-16	0.00e+00	2.15e-11
RB-86	0.00e+00	2.19e+08	0.00e+00	0.00e+00	0.00e+00	4.32e+07	0.00e+00	1.02e+08
RB-88	0.00e+00	2.68e-22	0.00e+00	0.00e+00	0.00e+00	3.70e-33	0.00e+00	1.42e-22
RB-89	0.00e+00	1.04e-26	0.00e+00	0.00e+00	0.00e+00	6.02e-40	0.00e+00	7.29e-27
SR-89	9.97e+09	0.00e+00	0.00e+00	0.00e+00	0.00e+00	1.60e+09	0.00e+00	2.86e+08
SR-90	6.05e+11	0.00e+00	0.00e+00	0.00e+00	0.00e+00	1.75e+10	0.00e+00	1.48e+11
SR-91	3.02e+05	0.00e+00	0.00e+00	0.00e+00	0.00e+00	1.44e+06	0.00e+00	1.22e+04
SR-92	4.15e+02	0.00e+00	0.00e+00	0.00e+00	0.00e+00	8.23e+03	0.00e+00	1.80e+01
Y-90	1.33e+04	0.00e+00	0.00e+00	0.00e+00	0.00e+00	1.41e+08	0.00e+00	3.56e+02
Y-91	5.11e+06	0.00e+00	0.00e+00	0.00e+00	0.00e+00	2.81e+09	0.00e+00	1.37e+05
Y-91M	4.78e-09	0.00e+00	0.00e+00	0.00e+00	0.00e+00	1.40e-08	0.00e+00	1.85e-10
Y-92	8.97e-01	0.00e+00	0.00e+00	0.00e+00	0.00e+00	1.57e+04	0.00e+00	2.62e-02
Y-93	1.68e+02	0.00e+00	0.00e+00	0.00e+00	0.00e+00	5.34e+06	0.00e+00	4.65e+00
ZR-95	1.17e+06	3.77e+05	0.00e+00	5.91e+05	0.00e+00	1.19e+09	0.00e+00	2.55e+05
ZR-97	3.36e+02	6.78e+01	0.00e+00	1.02e+02	0.00e+00	2.10e+07	0.00e+00	3.10e+01
NB-95	1.42e+05	7.92e+04	0.00e+00	7.83e+04	0.00e+00	4.81e+08	0.00e+00	4.26e+04
MO-99	0.00e+00	6.15e+06	0.00e+00	1.39e+07	0.00e+00	1.43e+07	0.00e+00	1.17e+06
TC-99M	3.06e+00	8.66e+00	0.00e+00	1.32e+02	4.24e+00	5.13e+03	0.00e+00	1.10e+02
TC-101	6.02e-31	8.68e-31	0.00e+00	1.56e-29	4.44e-31	2.61e-42	0.00e+00	8.51e-30
RU-103	4.77e+06	0.00e+00	0.00e+00	1.82e+07	0.00e+00	5.57e+08	0.00e+00	2.06e+06
RU-105	5.30e+01	0.00e+00	0.00e+00	6.85e+02	0.00e+00	3.24e+04	0.00e+00	2.09e+01

DOSE FACTORS: RADIONUCLIDES OTHER THAN NOBLE GASES
(Ref.3.9 Ch. 5.2, 5.3)

Units: Airborne Pathways & Tritium Ingestion: (mrem/yr)/(µCi/m^3))
Deposition Pathways: (m^2 * (mrem/yr)/(µCi/sec)
AgeGroup: ADULT
Pathway: Vegetation (VEG)

Nuclide	Bone	Liver	Thyroid	Kidney	Lung	GI-Lli	Skin	TB
RU-106	1.93e+08	0.00e+00	0.00e+00	3.72e+08	0.00e+00	1.25e+10	0.00e+00	2.44e+07
AG-110M	1.05e+07	9.75e+06	0.00e+00	1.92e+07	0.00e+00	3.98e+09	0.00e+00	5.79e+06
TE-125M	9.65e+07	3.50e+07	2.90e+07	3.93e+08	0.00e+00	3.85e+08	0.00e+00	1.29e+07
TE-127	5.62e+03	2.02e+03	4.16e+03	2.29e+04	0.00e+00	4.43e+05	0.00e+00	1.22e+03
TE-127M	3.49e+08	1.25e+08	8.92e+07	1.42e+09	0.00e+00	1.17e+09	0.00e+00	4.26e+07
TE-129	7.16e-04	2.69e-04	5.49e-04	3.01e-03	0.00e+00	5.40e-04	0.00e+00	1.74e-04
TE-129M	2.51e+08	9.37e+07	8.63e+07	1.05e+09	0.00e+00	1.27e+09	0.00e+00	3.98e+07
TE-131	1.26e-15	5.26e-16	1.04e-15	5.51e-15	0.00e+00	1.78e-16	0.00e+00	3.97e-16
TE-131M	9.10e+05	4.45e+05	7.05e+05	4.51e+06	0.00e+00	4.42e+07	0.00e+00	3.71e+05
TE-132	4.30e+06	2.78e+06	3.07e+06	2.68e+07	0.00e+00	1.32e+08	0.00e+00	2.61e+06
I-130	1.95e+05	5.75e+05	4.88e+07	8.98e+05	0.00e+00	4.95e+05	0.00e+00	2.27e+05
I-131	4.04e+07	5.77e+07	1.89e+10	9.90e+07	0.00e+00	1.52e+07	0.00e+00	3.31e+07
I-132	2.79e+01	7.46e+01	2.61e+03	1.19e+02	0.00e+00	1.40e+01	0.00e+00	2.61e+01
I-133	1.04e+06	1.81e+06	2.66e+08	3.15e+06	0.00e+00	1.63e+06	0.00e+00	5.51e+05
I-134	4.44e-05	1.21e-04	2.09e-03	1.92e-04	0.00e+00	1.05e-07	0.00e+00	4.31e-05
I-135	1.93e+04	5.05e+04	3.33e+06	8.09e+04	0.00e+00	5.70e+04	0.00e+00	1.86e+04
CS-134	4.67e+09	1.11e+10	0.00e+00	3.59e+09	1.19e+09	1.94e+08	0.00e+00	9.08e+09
CS-136	4.27e+07	1.68e+08	0.00e+00	9.37e+07	1.28e+07	1.91e+07	0.00e+00	1.21e+08
CS-137	6.36e+09	8.70e+09	0.00e+00	2.95e+09	9.81e+08	1.68e+08	0.00e+00	5.70e+09
CS-138	3.42e-11	6.74e-11	0.00e+00	4.95e-11	4.89e-12	2.88e-16	0.00e+00	3.34e-11
BA-139	2.71e-02	1.93e-05	0.00e+00	1.80e-05	1.10e-05	4.80e-02	0.00e+00	7.93e-04
BA-140	1.28e+08	1.61e+05	0.00e+00	5.49e+04	9.24e+04	2.64e+08	0.00e+00	8.41e+06
BA-141	9.05e-22	6.84e-25	0.00e+00	6.36e-25	3.88e-25	4.26e-31	0.00e+00	3.05e-23
BA-142	3.96e-39	4.07e-42	0.00e+00	3.44e-42	2.30e-42	5.57e-57	0.00e+00	2.49e-40
LA-140	1.97e+03	9.95e+02	0.00e+00	0.00e+00	0.00e+00	7.31e+07	0.00e+00	2.63e+02
LA-142	1.93e-04	8.77e-05	0.00e+00	0.00e+00	0.00e+00	6.41e-01	0.00e+00	2.19e-05
CE-141	1.97e+05	1.33e+05	0.00e+00	6.19e+04	0.00e+00	5.10e+08	0.00e+00	1.51e+04
CE-143	9.96e+02	7.36e+05	0.00e+00	3.24e+02	0.00e+00	2.75e+07	0.00e+00	8.15e+01
CE-144	3.29e+07	1.38e+07	0.00e+00	8.16e+06	0.00e+00	1.11e+10	0.00e+00	1.77e+06
PR-143	6.26e+04	2.51e+04	0.00e+00	1.45e+04	0.00e+00	2.74e+08	0.00e+00	3.10e+03
PR-144	2.39e-26	9.93e-27	0.00e+00	5.60e-27	0.00e+00	3.44e-33	0.00e+00	1.22e-27
ND-147	3.33e+04	3.85e+04	0.00e+00	2.25e+04	0.00e+00	1.85e+08	0.00e+00	2.30e+03
W-187	3.79e+04	3.17e+04	0.00e+00	0.00e+00	0.00e+00	1.04e+07	0.00e+00	1.11e+04
NP-239	1.43e+03	1.40e+02	0.00e+00	4.37e+02	0.00e+00	2.88e+07	0.00e+00	7.73e+01
PU-239	5.81e+10	6.98e+09	0.00e+00	6.50e+09	0.00e+00	5.34e+09	0.00e+00	1.53e+09
U-235	6.42e+10	0.00e+00	0.00e+00	1.50e+10	0.00e+00	6.26e+09	0.00e+00	3.90e+09

DOSE FACTORS: RADIONUCLIDES OTHER THAN NOBLE GASES
(Ref.3.9 Ch. 5.2, 5.3)

Units: Airborne Pathways & Tritium Ingestion: (mrem/yr)/(µCi/m^3))
Deposition Pathways: (m^2 * (mrem/yr)/(µCi/sec)
AgeGroup: TEEN
Pathway: Grs/Goat/Milk (GMILK)

Nuclide	Bone	Liver	Thyroid	Kidney	Lung	GI-Lli	Skin	TB
H-3	0.00e+00	2.03e+03	2.03e+03	2.03e+03	2.03e+03	2.03e+03	0.00e+00	2.03e+03
C-14	4.86e+08	9.72e+07	9.72e+07	9.72e+07	9.72e+07	9.72e+07	0.00e+00	9.72e+07
NA-24	5.12e+05	5.12e+05	5.12e+05	5.12e+05	5.12e+05	5.12e+05	0.00e+00	5.12e+05
P-32	5.88e+09	2.35e+09	0.00e+00	0.00e+00	0.00e+00	3.18e+09	0.00e+00	1.47e+09
CR-51	0.00e+00	0.00e+00	3.33e+03	1.31e+03	8.55e+03	1.01e+06	0.00e+00	5.99e+03
MN-54	0.00e+00	1.68e+06	0.00e+00	5.02e+05	0.00e+00	3.45e+06	0.00e+00	3.34e+05
MN-56	0.00e+00	8.99e-04	0.00e+00	1.14e-03	0.00e+00	5.92e-02	0.00e+00	1.60e-04
FE-55	5.79e+05	4.11e+05	0.00e+00	0.00e+00	2.60e+05	1.78e+05	0.00e+00	9.57e+04
FE-59	6.74e+05	1.57e+06	0.00e+00	0.00e+00	4.96e+05	3.72e+06	0.00e+00	6.07e+05
CO-58	0.00e+00	9.52e+05	0.00e+00	0.00e+00	0.00e+00	1.31e+07	0.00e+00	2.20e+06
CO-60	0.00e+00	3.34e+06	0.00e+00	0.00e+00	0.00e+00	4.35e+07	0.00e+00	7.52e+06
NI-63	1.42e+09	1.00e+08	0.00e+00	0.00e+00	0.00e+00	1.60e+07	0.00e+00	4.81e+07
NI-65	8.27e-02	1.06e-02	0.00e+00	0.00e+00	0.00e+00	5.73e-01	0.00e+00	4.82e-03
CU-64	0.00e+00	4.75e+03	0.00e+00	1.20e+04	0.00e+00	3.68e+05	0.00e+00	2.23e+03
ZN-65	2.53e+08	8.78e+08	0.00e+00	5.62e+08	0.00e+00	3.72e+08	0.00e+00	4.10e+08
ZN-69	4.86e-13	9.25e-13	0.00e+00	6.04e-13	0.00e+00	1.70e-12	0.00e+00	6.47e-14
BR-83	0.00e+00	0.00e+00	0.00e+00	0.00e+00	0.00e+00	0.00e+00	0.00e+00	2.19e-02
BR-84	0.00e+00	0.00e+00	0.00e+00	0.00e+00	0.00e+00	0.00e+00	0.00e+00	3.76e-24
RB-86	0.00e+00	5.68e+08	0.00e+00	0.00e+00	0.00e+00	8.40e+07	0.00e+00	2.67e+08
RB-88	0.00e+00	5.44e-46	0.00e+00	0.00e+00	0.00e+00	4.66e-53	0.00e+00	2.90e-46
RB-89	0.00e+00	1.40e-54	0.00e+00	0.00e+00	0.00e+00	2.15e-63	0.00e+00	9.93e-55
SR-89	5.62e+09	0.00e+00	0.00e+00	0.00e+00	0.00e+00	6.69e+08	0.00e+00	1.61e+08
SR-90	1.39e+11	0.00e+00	0.00e+00	0.00e+00	0.00e+00	3.90e+09	0.00e+00	3.43e+10
SR-91	1.12e+05	0.00e+00	0.00e+00	0.00e+00	0.00e+00	5.09e+05	0.00e+00	4.46e+03
SR-92	1.91e+00	0.00e+00	0.00e+00	0.00e+00	0.00e+00	4.86e+01	0.00e+00	8.14e-02
Y-90	1.56e+01	0.00e+00	0.00e+00	0.00e+00	0.00e+00	1.29e+05	0.00e+00	4.21e-01
Y-91	1.90e+03	0.00e+00	0.00e+00	0.00e+00	0.00e+00	7.77e+05	0.00e+00	5.08e+01
Y-91M	1.39e-20	0.00e+00	0.00e+00	0.00e+00	0.00e+00	6.56e-19	0.00e+00	5.31e-22
Y-92	1.25e-05	0.00e+00	0.00e+00	0.00e+00	0.00e+00	3.44e-01	0.00e+00	3.63e-07
Y-93	4.97e-02	0.00e+00	0.00e+00	0.00e+00	0.00e+00	1.52e+03	0.00e+00	1.36e-03
ZR-95	1.98e+02	6.25e+01	0.00e+00	9.18e+01	0.00e+00	1.44e+05	0.00e+00	4.30e+01
ZR-97	9.49e-02	1.88e-02	0.00e+00	2.85e-02	0.00e+00	5.08e+03	0.00e+00	8.65e-03
NB-95	1.69e+04	9.37e+03	0.00e+00	9.08e+03	0.00e+00	4.01e+07	0.00e+00	5.16e+03
MO-99	0.00e+00	5.37e+06	0.00e+00	1.23e+07	0.00e+00	9.62e+06	0.00e+00	1.02e+06
TC-99M	6.97e-01	1.94e+00	0.00e+00	2.89e+01	1.08e+00	1.28e+03	0.00e+00	2.52e+01
TC-101	6.90e-61	9.81e-61	0.00e+00	1.77e-59	5.98e-61	1.68e-67	0.00e+00	9.64e-60
RU-103	2.17e+02	0.00e+00	0.00e+00	7.66e+02	0.00e+00	1.82e+04	0.00e+00	9.29e+01
RU-105	1.90e-04	0.00e+00	0.00e+00	2.39e-03	0.00e+00	1.53e-01	0.00e+00	7.36e-05

DOSE FACTORS: RADIONUCLIDES OTHER THAN NOBLE GASES
(Ref.3.9 Ch. 5.2, 5.3)

Units: Airborne Pathways & Tritium Ingestion: (mrem/yr)/(µCi/m^3))
Deposition Pathways: (m^2 * (mrem/yr)/(µCi/sec)
AgeGroup: TEEN
Pathway: Grs/Goat/Milk (GMILK)

Nuclide	Bone	Liver	Thyroid	Kidney	Lung	GI-Lli	Skin	TB
RU-106	4.50e+03	0.00e+00	0.00e+00	8.68e+03	0.00e+00	2.16e+05	0.00e+00	5.67e+02
AG-110M	1.16e+07	1.09e+07	0.00e+00	2.09e+07	0.00e+00	3.07e+09	0.00e+00	6.65e+06
TE-125M	3.61e+06	1.30e+06	1.01e+06	0.00e+00	0.00e+00	1.06e+07	0.00e+00	4.82e+05
TE-127	1.46e+02	5.17e+01	1.01e+02	5.91e+02	0.00e+00	1.13e+04	0.00e+00	3.14e+01
TE-127M	1.01e+07	3.59e+06	2.41e+06	4.11e+07	0.00e+00	2.52e+07	0.00e+00	1.20e+06
TE-129	6.49e-11	2.42e-11	4.64e-11	2.72e-10	0.00e+00	3.55e-10	0.00e+00	1.58e-11
TE-129M	1.32e+07	4.90e+06	4.26e+06	5.53e+07	0.00e+00	4.96e+07	0.00e+00	2.09e+06
TE-131	8.82e-34	3.63e-34	6.79e-34	3.86e-33	0.00e+00	7.24e-35	0.00e+00	2.76e-34
TE-131M	7.90e+04	3.79e+04	5.70e+04	3.95e+05	0.00e+00	3.04e+06	0.00e+00	3.16e+04
TE-132	5.15e+05	3.26e+05	3.44e+05	3.13e+06	0.00e+00	1.03e+07	0.00e+00	3.07e+05
I-130	4.45e+05	1.29e+06	1.05e+08	1.98e+06	0.00e+00	9.89e+05	0.00e+00	5.14e+05
I-131	3.22e+08	4.51e+08	1.32e+11	7.77e+08	0.00e+00	8.93e+07	0.00e+00	2.43e+08
I-132	1.78e-01	4.67e-01	1.57e+01	7.35e-01	0.00e+00	2.03e-01	0.00e+00	1.67e-01
I-133	4.25e+06	7.21e+06	1.01e+09	1.27e+07	0.00e+00	5.46e+06	0.00e+00	2.20e+06
I-134	2.27e-12	6.00e-12	1.00e-10	9.46e-12	0.00e+00	7.91e-14	0.00e+00	2.16e-12
I-135	1.38e+04	3.55e+04	2.28e+06	5.60e+04	0.00e+00	3.93e+04	0.00e+00	1.32e+04
CS-134	2.95e+10	6.93e+10	0.00e+00	2.20e+10	8.41e+09	8.62e+08	0.00e+00	3.22e+10
CS-136	1.35e+09	5.29e+09	0.00e+00	2.88e+09	4.54e+08	4.26e+08	0.00e+00	3.55e+09
CS-137	4.02e+10	5.34e+10	0.00e+00	1.82e+10	7.06e+09	7.60e+08	0.00e+00	1.86e+10
CS-138	5.36e-23	1.03e-22	0.00e+00	7.59e-23	8.84e-24	4.67e-26	0.00e+00	5.14e-23
BA-139	1.01e-08	7.13e-12	0.00e+00	6.72e-12	4.92e-12	9.04e-08	0.00e+00	2.95e-10
BA-140	5.82e+06	7.14e+03	0.00e+00	2.42e+03	4.80e+03	8.98e+06	0.00e+00	3.75e+05
BA-141	1.05e-46	7.83e-50	0.00e+00	7.27e-50	5.36e-50	2.24e-52	0.00e+00	3.50e-48
BA-142	7.46e-81	7.46e-84	0.00e+00	6.31e-84	4.96e-84	2.29e-92	0.00e+00	4.59e-82
LA-140	9.74e-01	4.78e-01	0.00e+00	0.00e+00	0.00e+00	2.75e+04	0.00e+00	1.27e-01
LA-142	4.14e-12	1.84e-12	0.00e+00	0.00e+00	0.00e+00	5.60e-08	0.00e+00	4.58e-13
CE-141	1.07e+03	7.12e+02	0.00e+00	3.35e+02	0.00e+00	2.04e+06	0.00e+00	8.18e+01
CE-143	9.18e+00	6.68e+03	0.00e+00	3.00e+00	0.00e+00	2.01e+05	0.00e+00	7.46e-01
CE-144	7.90e+04	3.27e+04	0.00e+00	1.95e+04	0.00e+00	1.99e+07	0.00e+00	4.25e+03
PR-143	3.48e+01	1.39e+01	0.00e+00	8.08e+00	0.00e+00	1.15e+05	0.00e+00	1.73e+00
PR-144	1.52e-54	6.23e-55	0.00e+00	3.57e-55	0.00e+00	1.68e-57	0.00e+00	7.71e-56
ND-147	2.18e+01	2.36e+01	0.00e+00	1.39e+01	0.00e+00	8.53e+04	0.00e+00	1.42e+00
W-187	1.43e+03	1.17e+03	0.00e+00	0.00e+00	0.00e+00	3.16e+05	0.00e+00	4.09e+02
NP-239	8.42e-01	7.94e-02	0.00e+00	2.49e-01	0.00e+00	1.28e+04	0.00e+00	4.41e-02
PU-239	4.58e+06	5.56e+05	0.00e+00	5.13e+05	0.00e+00	4.22e+05	0.00e+00	1.20e+05
U-235	6.82e+08	0.00e+00	0.00e+00	1.60e+08	0.00e+00	4.95e+07	0.00e+00	4.15e+07

DOSE FACTORS: RADIONUCLIDES OTHER THAN NOBLE GASES
(Ref.3.9 Ch. 5.2, 5.3)

Units: Airborne Pathways & Tritium Ingestion: (mrem/yr)/(uCi/m^3))
Deposition Pathways: (m^2 * (mrem/yr)/(µCi/sec)
AgeGroup: TEEN
Pathway: Ground Plane Deposition (GPD)

Nuclide	Bone	Liver	Thyroid	Kidney	Lung	GI-Lli	Skin	TB
NA-24	1.20e+07	1.20e+07	1.20e+07	1.20e+07	1.20e+07	1.20e+07	1.39e+07	1.20e+07
CR-51	4.66e+06	4.66e+06	4.66e+06	4.66e+06	4.66e+06	4.66e+06	5.51e+06	4.66e+06
MN-54	1.39e+09	1.39e+09	1.39e+09	1.39e+09	1.39e+09	1.39e+09	1.63e+09	1.39e+09
MN-56	9.04e+05	9.04e+05	9.04e+05	9.04e+05	9.04e+05	9.04e+05	1.07e+06	9.04e+05
FE-59	2.72e+08	2.72e+08	2.72e+08	2.72e+08	2.72e+08	2.72e+08	3.20e+08	2.72e+08
CO-58	3.79e+08	3.79e+08	3.79e+08	3.79e+08	3.79e+08	3.79e+08	4.44e+08	3.79e+08
CO-60	2.15e+10	2.15e+10	2.15e+10	2.15e+10	2.15e+10	2.15e+10	2.53e+10	2.15e+10
NI-65	2.97e+05	2.97e+05	2.97e+05	2.97e+05	2.97e+05	2.97e+05	3.45e+05	2.97e+05
CU-64	6.07e+05	6.07e+05	6.07e+05	6.07e+05	6.07e+05	6.07e+05	6.88e+05	6.07e+05
ZN-65	7.47e+08	7.47e+08	7.47e+08	7.47e+08	7.47e+08	7.47e+08	8.60e+08	7.47e+08
BR-83	4.87e+03	4.87e+03	4.87e+03	4.87e+03	4.87e+03	4.87e+03	7.08e+03	4.87e+03
BR-84	2.03e+05	2.03e+05	2.03e+05	2.03e+05	2.03e+05	2.03e+05	2.36e+05	2.03e+05
RB-86	8.99e+06	8.99e+06	8.99e+06	8.99e+06	8.99e+06	8.99e+06	1.03e+07	8.99e+06
RB-88	3.31e+04	3.31e+04	3.31e+04	3.31e+04	3.31e+04	3.31e+04	3.78e+04	3.31e+04
RB-89	1.21e+05	1.21e+05	1.21e+05	1.21e+05	1.21e+05	1.21e+05	1.45e+05	1.21e+05
SR-89	2.16e+04	2.16e+04	2.16e+04	2.16e+04	2.16e+04	2.16e+04	2.51e+04	2.16e+04
SR-91	2.15e+06	2.15e+06	2.15e+06	2.15e+06	2.15e+06	2.15e+06	2.51e+06	2.15e+06
SR-92	7.77e+05	7.77e+05	7.77e+05	7.77e+05	7.77e+05	7.77e+05	8.63e+05	7.77e+05
Y-90	4.49e+03	4.49e+03	4.49e+03	4.49e+03	4.49e+03	4.49e+03	5.31e+03	4.49e+03
Y-91	1.07e+06	1.07e+06	1.07e+06	1.07e+06	1.07e+06	1.07e+06	1.21e+06	1.07e+06
Y-91M	1.00e+05	1.00e+05	1.00e+05	1.00e+05	1.00e+05	1.00e+05	1.16e+05	1.00e+05
Y-92	1.80e+05	1.80e+05	1.80e+05	1.80e+05	1.80e+05	1.80e+05	2.14e+05	1.80e+05
Y-93	1.83e+05	1.83e+05	1.83e+05	1.83e+05	1.83e+05	1.83e+05	2.51e+05	1.83e+05
ZR-95	2.45e+08	2.45e+08	2.45e+08	2.45e+08	2.45e+08	2.45e+08	2.84e+08	2.45e+08
ZR-97	2.96e+06	2.96e+06	2.96e+06	2.96e+06	2.96e+06	2.96e+06	3.45e+06	2.96e+06
NB-95	1.37e+08	1.37e+08	1.37e+08	1.37e+08	1.37e+08	1.37e+08	1.61e+08	1.37e+08
MO-99	4.00e+06	4.00e+06	4.00e+06	4.00e+06	4.00e+06	4.00e+06	4.63e+06	4.00e+06
TC-99M	1.84e+05	1.84e+05	1.84e+05	1.84e+05	1.84e+05	1.84e+05	2.11e+05	1.84e+05
TC-101	2.04e+04	2.04e+04	2.04e+04	2.04e+04	2.04e+04	2.04e+04	2.26e+04	2.04e+04
RU-103	1.08e+08	1.08e+08	1.08e+08	1.08e+08	1.08e+08	1.08e+08	1.26e+08	1.08e+08
RU-105	6.37e+05	6.37e+05	6.37e+05	6.37e+05	6.37e+05	6.37e+05	7.21e+05	6.37e+05
RU-106	4.22e+08	4.22e+08	4.22e+08	4.22e+08	4.22e+08	4.22e+08	5.07e+08	4.22e+08
AG-110M	3.44e+09	3.44e+09	3.44e+09	3.44e+09	3.44e+09	3.44e+09	4.01e+09	3.44e+09
TE-125M	1.55e+06	1.55e+06	1.55e+06	1.55e+06	1.55e+06	1.55e+06	2.13e+06	1.55e+06
TE-127	2.98e+03	2.98e+03	2.98e+03	2.98e+03	2.98e+03	2.98e+03	3.28e+03	2.98e+03
TE-127M	9.16e+04	9.16e+04	9.16e+04	9.16e+04	9.16e+04	9.16e+04	1.08e+05	9.16e+04
TE-129	2.62e+04	2.62e+04	2.62e+04	2.62e+04	2.62e+04	2.62e+04	3.10e+04	2.62e+04
TE-129M	1.98e+07	1.98e+07	1.98e+07	1.98e+07	1.98e+07	1.98e+07	2.31e+07	1.98e+07

DOSE FACTORS: RADIONUCLIDES OTHER THAN NOBLE GASES
(Ref.3.9 Ch. 5.2, 5.3)

Units: Airborne Pathways & Tritium Ingestion: (mrem/yr)/(uCi/m^3))
Deposition Pathways: (m^2 * (mrem/yr)/(uCi/sec)
AgeGroup: TEEN
Pathway: Ground Plane Deposition (GPD)

Nuclide	Bone	Liver	Thyroid	Kidney	Lung	GI-Lli	Skin	TB
TE-131	2.92e+04	2.92e+04	2.92e+04	2.92e+04	2.92e+04	2.92e+04	3.45e+07	2.92e+04
TE-131M	8.03e+06	8.03e+06	8.03e+06	8.03e+06	8.03e+06	8.03e+06	9.46e+06	8.03e+06
TE-132	4.24e+06	4.24e+06	4.24e+06	4.24e+06	4.24e+06	4.24e+06	4.98e+06	4.24e+06
I-130	5.51e+06	5.51e+06	5.51e+06	5.51e+06	5.51e+06	5.51e+06	6.69e+06	5.51e+06
I-131	1.72e+07	1.72e+07	1.72e+07	1.72e+07	1.72e+07	1.72e+07	2.09e+07	1.72e+07
I-132	1.25e+06	1.25e+06	1.25e+06	1.25e+06	1.25e+06	1.25e+06	1.47e+06	1.25e+06
I-133	2.45e+06	2.45e+06	2.45e+06	2.45e+06	2.45e+06	2.45e+06	2.98e+06	2.45e+06
I-134	4.47e+05	4.47e+05	4.47e+05	4.47e+05	4.47e+05	4.47e+05	5.31e+05	4.47e+05
I-135	2.53e+06	2.53e+06	2.53e+06	2.53e+06	2.53e+06	2.53e+06	2.95e+06	2.53e+06
CS-134	6.86e+09	6.86e+09	6.86e+09	6.86e+09	6.86e+09	6.86e+09	8.00e+09	6.86e+09
CS-136	1.51e+08	1.51e+08	1.51e+08	1.51e+08	1.51e+08	1.51e+08	1.71e+08	1.51e+08
CS-137	1.03e+10	1.03e+10	1.03e+10	1.03e+10	1.03e+10	1.03e+10	1.20e+10	1.03e+10
CS-138	3.59e+05	3.59e+05	3.59e+05	3.59e+05	3.59e+05	3.59e+05	4.10e+05	3.59e+05
BA-139	1.06e+05	1.06e+05	1.06e+05	1.06e+05	1.06e+05	1.06e+05	1.19e+05	1.06e+05
BA-140	2.05e+07	2.05e+07	2.05e+07	2.05e+07	2.05e+07	2.05e+07	2.35e+07	2.05e+07
BA-141	4.17e+04	4.17e+04	4.17e+04	4.17e+04	4.17e+04	4.17e+04	4.75e+04	4.17e+04
BA-142	4.49e+04	4.49e+04	4.49e+04	4.49e+04	4.49e+04	4.49e+04	5.11e+04	4.49e+04
LA-140	1.92e+07	1.92e+07	1.92e+07	1.92e+07	1.92e+07	1.92e+07	2.18e+07	1.92e+07
LA-142	7.60e+05	7.60e+05	7.60e+05	7.60e+05	7.60e+05	7.60e+05	9.12e+05	7.60e+05
CE-141	1.37e+07	1.37e+07	1.37e+07	1.37e+07	1.37e+07	1.37e+07	1.54e+07	1.37e+07
CE-143	2.31e+06	2.31e+06	2.31e+06	2.31e+06	2.31e+06	2.31e+06	2.63e+06	2.31e+06
CE-144	6.95e+07	6.95e+07	6.95e+07	6.95e+07	6.95e+07	6.95e+07	8.04e+07	6.95e+07
PR-144	1.84e+03	1.84e+03	1.84e+03	1.84e+03	1.84e+03	1.84e+03	2.11e+03	1.84e+03
ND-147	8.39e+06	8.39e+06	8.39e+06	8.39e+06	8.39e+06	8.39e+06	1.01e+07	8.39e+06
W-187	2.35e+06	2.35e+06	2.35e+06	2.35e+06	2.35e+06	2.35e+06	2.73e+06	2.35e+06
NP-239	1.71e+06	1.71e+06	1.71e+06	1.71e+06	1.71e+06	1.71e+06	1.98e+06	1.71e+06
PU-239	2.29e+06	2.29e+06	2.29e+06	2.29e+06	2.29e+06	2.29e+06	2.23e+07	2.29e+06
U-235	9.28e+09	9.28e+09	9.28e+09	9.28e+09	9.28e+09	9.28e+09	1.16e+10	9.28e+09

DOSE FACTORS: RADIONUCLIDES OTHER THAN NOBLE GASES
(Ref.3.9 Ch. 5.2, 5.3)

Units: Airborne Pathways & Tritium Ingestion: (mrem/yr)/(µCi/m^3))
Deposition Pathways: (m^2 * (mrem/yr)/(µCi/sec)
AgeGroup: TEEN
Pathway: Inhalation (INHL)

Nuclide	Bone	Liver	Thyroid	Kidney	Lung	GI-Lli	Skin	TB
H-3	0.00e+00	1.27e+03	1.27e+03	1.27e+03	1.27e+03	1.27e+03	0.00e+00	1.27e+03
C-I4	2.60e+04	4.87e+03	4.87e+03	4.87e+03	4.87e+03	4.87e+03	0.00e+00	4.87e+03
NA-24	1.38e+04	1.38e+04	1.38e+04	1.38e+04	1.38e+04	1.38e+04	0.00e+00	1.38e+04
P-32	1.89e+06	1.10e+05	0.00e+00	0.00e+00	0.00e+00	9.28e+04	0.00e+00	7.16e+04
CR-51	0.00e+00	0.00e+00	7.50e+01	3.07e+01	2.10e+04	3.00e+03	0.00e+00	1.35e+02
MN-54	0.00e+00	5.11e+04	0.00e+00	1.27e+04	1.98e+06	6.68e+04	0.00e+00	8.40e+03
MN-56	0.00e+00	1.70e+00	0.00e+00	1.79e+00	1.52e+04	5.74e+04	0.00e+00	2.52e-01
FE-55	3.34e+04	2.38e+04	0.00e+00	0.00e+00	1.24e+05	6.39e+03	0.00e+00	5.54e+03
FE-59	1.59e+04	3.70e+04	0.00e+00	0.00e+00	1.53e+06	1.78e+05	0.00e+00	1.43e+04
CO-58	0.00e+00	2.07e+03	0.00e+00	0.00e+00	1.34e+06	9.52e+04	0.00e+00	2.78e+03
CO-60	0.00e+00	1.51e+04	0.00e+00	0.00e+00	8.72e+06	2.59e+05	0.00e+00	1.98e+04
NI-63	5.80e+05	4.34e+04	0.00e+00	0.00e+00	3.07e+05	1.42e+04	0.00e+00	1.98e+04
NI-65	2.18e+00	2.93e-01	0.00e+00	0.00e+00	9.36e+03	3.67e+04	0.00e+00	1.27e-01
CU-64	0.00e+00	2.03e+00	0.00e+00	6.41e+00	1.11e+04	6.14e+04	0.00e+00	8.48e-01
ZN-65	3.86e+04	1.34e+05	0.00e+00	8.64e+04	1.24e+06	4.66e+04	0.00e+00	6.24e+04
ZN-69	4.83e-02	9.20e-02	0.00e+00	6.02e-02	1.58e+03	2.85e+02	0.00e+00	6.46e-03
BR-83	0.00e+00	0.00e+00	0.00e+00	0.00e+00	0.00e+00	0.00e+00	0.00e+00	3.44e+02
BR-84	0.00e+00	0.00e+00	0.00e+00	0.00e+00	0.00e+00	0.00e+00	0.00e+00	4.33e+02
BR-85	0.00e+00	0.00e+00	0.00e+00	0.00e+00	0.00e+00	0.00e+00	0.00e+00	1.83e+01
RB-86	0.00e+00	1.90e+05	0.00e+00	0.00e+00	0.00e+00	1.77e+04	0.00e+00	8.40e+04
RB-88	0.00e+00	5.46e+02	0.00e+00	0.00e+00	0.00e+00	2.92e-05	0.00e+00	2.72e+02
RB-89	0.00e+00	3.52e+02	0.00e+00	0.00e+00	0.00e+00	3.38e-07	0.00e+00	2.33e+02
SR-89	4.34e+05	0.00e+00	0.00e+00	0.00e+00	2.42e+06	3.71e+05	0.00e+00	1.25e+04
SR-90	1.08e+08	0.00e+00	0.00e+00	0.00e+00	1.65e+07	7.65e+05	0.00e+00	6.68e+06
SR-91	8.80e+01	0.00e+00	0.00e+00	0.00e+00	6.07e+04	2.59e+05	0.00e+00	3.51e+00
SR-92	9.52e+00	0.00e+00	0.00e+00	0.00e+00	2.74e+04	1.19e+05	0.00e+00	4.06e-01
Y-90	2.98e+03	0.00e+00	0.00e+00	0.00e+00	2.93e+05	5.59e+05	0.00e+00	8.00e+01
Y-91	6.61e+05	0.00e+00	0.00e+00	0.00e+00	2.94e+06	4.09e+05	0.00e+00	1.77e+04
Y-91M	3.70e-01	0.00e+00	0.00e+00	0.00e+00	3.20e+03	3.02e+01	0.00e+00	1.42e-02
Y-92	1.47e+01	0.00e+00	0.00e+00	0.00e+00	2.68e+04	1.65e+05	0.00e+00	4.29e-01
Y-93	1.35e+02	0.00e+00	0.00e+00	0.00e+00	8.32e+04	5.79e+05	0.00e+00	3.72e+00
ZR-95	1.46e+05	4.58e+04	0.00e+00	6.74e+04	2.69e+06	1.49e+05	0.00e+00	3.15e+04
ZR-97	1.38e+02	2.72e+01	0.00e+00	4.12e+01	1.30e+05	6.30e+05	0.00e+00	1.26e+01
NB-95	1.86e+04	1.03e+04	0.00e+00	1.00e+04	7.51e+05	9.68e+04	0.00e+00	5.66e+03
MO-99	0.00e+00	1.69e+02	0.00e+00	4.11e+02	1.54e+05	2.69e+05	0.00e+00	3.22e+01
TC-99M	1.38e-03	3.86e-03	0.00e+00	5.76e-02	1.15e+03	6.13e+03	0.00e+00	4.99e-02
TC-101	5.92e-05	8.40e-05	0.00e+00	1.52e-03	6.67e+02	8.72e-07	0.00e+00	8.24e-04
RU-103	2.10e+03	0.00e+00	0.00e+00	7.43e+03	7.83e+05	1.09e+05	0.00e+00	8.96e+02

DOSE FACTORS: RADIONUCLIDES OTHER THAN NOBLE GASES
(Ref.3.9 Ch. 5.2, 5.3)

Units: Airborne Pathways & Tritium Ingestion: (mrem/yr)/(µCi/m^3))
Deposition Pathways: (m^2 * (mrem/yr)/(µCi/sec)
AgeGroup: TEEN
Pathway: Inhalation (INHL)

Nuclide	Bone	Liver	Thyroid	Kidney	Lung	GI-Lli	Skin	TB
RU-105	1.12e+00	0.00e+00	0.00e+00	1.41e+00	1.82e+04	9.04e+04	0.00e+00	4.34e-01
RU-106	9.84e+04	0.00e+00	0.00e+00	1.90e+05	1.61e+07	9.60e+05	0.00e+00	1.24e+04
AG-110M	1.38e+04	1.31e+04	0.00e+00	2.50e+04	6.75e+06	2.73e+05	0.00e+00	7.99e+03
TE-125M	4.88e+03	2.24e+03	1.40e+03	0.00e+00	5.36e+05	7.50e+04	0.00e+00	6.67e+02
TE-127	2.01e+00	9.12e-01	1.42e+00	7.28e+00	1.12e+04	8.08e+04	0.00e+00	4.42e-01
TE-127M	1.80e+04	8.16e+03	4.38e+03	6.54e+04	1.66e+06	1.59e+05	0.00e+00	2.18e+03
TE-129	7.10e-02	3.38e-02	5.18e-02	2.66e-01	3.30e+03	1.62e+03	0.00e+00	1.76e-02
TE-129M	1.39e+04	6.58e+03	4.58e+03	5.19e+04	1.98e+06	4.05e+05	0.00e+00	2.25e+03
TE-131	1.58e-02	8.32e-03	1.24e-02	6.18e-02	2.34e+03	1.51e+01	0.00e+00	5.04e-03
TE-131M	9.84e+01	6.01e+01	7.25e+01	4.39e+02	2.38e+05	6.21e+05	0.00e+00	4.02e+01
TE-132	3.60e+02	2.90e+02	2.46e+02	1.95e+03	4.49e+05	4.63e+05	0.00e+00	2.19e+02
I-130	6.24e+03	1.79e+04	1.49e+06	2.75e+04	0.00e+00	9.12e+03	0.00e+00	7.17e+03
I-131	3.54e+04	4.91e+04	1.46e+07	8.40e+04	0.00e+00	6.49e+03	0.00e+00	2.64e+04
I-132	1.59e+03	4.38e+03	1.51e+05	6.92e+03	0.00e+00	1.27e+03	0.00e+00	1.58e+03
I-133	1.22e+04	2.05e+04	2.92e+06	3.59e+04	0.00e+00	1.03e+04	0.00e+00	6.22e+03
I-134	8.88e+02	2.32e+03	3.95e+04	3.66e+03	0.00e+00	2.04e+01	0.00e+00	8.40e+02
I-135	3.70e+03	9.44e+03	6.21e+05	1.49e+04	0.00e+00	6.95e+03	0.00e+00	3.49e+03
CS-134	5.02e+05	1.13e+06	0.00e+00	3.75e+05	1.46e+05	9.76e+03	0.00e+00	5.49e+05
CS-136	5.15e+04	1.94e+05	0.00e+00	1.10e+05	1.78e+04	1.09e+04	0.00e+00	1.37e+05
CS-137	6.70e+05	8.48e+05	0.00e+00	3.04e+05	1.21e+05	8.48e+03	0.00e+00	3.11e+05
CS-138	4.66e+02	8.56e+02	0.00e+00	6.62e+02	7.87e+01	2.70e-01	0.00e+00	4.46e+02
BA-139	1.34e+00	9.44e-04	0.00e+00	8.88e-04	6.46e+03	6.45e+03	0.00e+00	3.90e-02
BA-140	5.47e+04	6.70e+01	0.00e+00	2.28e+01	2.03e+06	2.29e+05	0.00e+00	3.52e+03
BA-141	1.42e-01	1.06e-04	0.00e+00	9.84e-05	3.29e+03	7.46e-04	0.00e+00	4.74e-03
BA-142	3.70e-02	3.70e-05	0.00e+00	3.14e-05	1.91e+03	4.79e-10	0.00e+00	2.27e-03
LA-140	4.79e+02	2.36e+02	0.00e+00	0.00e+00	2.14e+05	4.87e+05	0.00e+00	6.26e+01
LA-142	9.60e-01	4.25e-01	0.00e+00	0.00e+00	1.02e+04	1.20e+04	0.00e+00	1.06e-01
CE-141	2.84e+04	1.90e+04	0.00e+00	8.88e+03	6.14e+05	1.26e+05	0.00e+00	2.17e+03
CE-143	2.66e+02	1.94e+02	0.00e+00	8.64e+01	1.30e+05	2.55e+05	0.00e+00	2.16e+01
CE-144	4.89e+06	2.02e+06	0.00e+00	1.21e+06	1.34e+07	8.64e+05	0.00e+00	2.62e+05
PR-143	1.34e+04	5.31e+03	0.00e+00	3.09e+03	4.83e+05	2.14e+05	0.00e+00	6.62e+02
PR-144	4.30e-02	1.76e-02	0.00e+00	1.01e-02	1.75e+03	2.35e-04	0.00e+00	2.18e-03
ND-147	7.86e+03	8.56e+03	0.00e+00	5.02e+03	3.72e+05	1.82e+05	0.00e+00	5.13e+02
W-187	1.20e+01	9.76e+00	0.00e+00	0.00e+00	4.74e+04	1.77e+05	0.00e+00	3.43e+00
NP-239	3.38e+02	2.88e+02	0.00e+00	1.00e+02	6.49e+04	1.32e+05	0.00e+00	1.77e+01
PU-239	1.38e+10	8.96e+09	0.00e+00	2.75e+09	2.34e+09	3.50e+05	0.00e+00	6.44e+08
U-235	1.14e+08	0.00e+00	0.00e+00	2.67e+07	6.75e+08	4.10e+05	0.00e+00	6.94e+06

DOSE FACTORS: RADIONUCLIDES OTHER THAN NOBLE GASES
(Ref.3.9 Ch. 5.2, 5.3)

Units: Airborne Pathways & Tritium Ingestion: (mrem/yr)/(µCi/m^3))
Deposition Pathways: (m^2 * (mrem/yr)/(µCi/sec)
AgeGroup: TEEN
Pathway: Grs/Cow/Meat (CMEAT)

Nuclide	Bone	Liver	Thyroid	Kidney	Lung	GI-Lli	Skin	TB
H-3	0.00e+00	1.94e+02	1.94e+02	1.94e+02	1.94e+02	1.94e+02	0.00e+00	1.94e+02
C-I4	2.04e+08	4.08e+07	4.08e+07	4.08e+07	4.08e+07	4.08e+07	0.00e+00	4.08e+07
NA-24	1.12e-03	1.12e-03	1.12e-03	1.12e-03	1.12e-03	1.12e-03	0.00e+00	1.12e-03
P-32	6.13e+08	2.44e+08	0.00e+00	0.00e+00	0.00e+00	3.31e+08	0.00e+00	1.53e+08
CR-51	0.00e+00	0.00e+00	3.13e+03	1.24e+03	8.05e+03	9.48e+05	0.00e+00	5.64e+03
MN-54	0.00e+00	7.00e+06	0.00e+00	2.09e+06	0.00e+00	1.44e+07	0.00e+00	1.39e+06
MN-56	0.00e+00	1.47e-53	0.00e+00	1.86e-53	0.00e+00	9.67e-52	0.00e+00	2.61e-54
FE-55	2.38e+08	1.69e+08	0.00e+00	0.00e+00	1.07e+08	7.31e+07	0.00e+00	3.94e+07
FE-59	2.12e+08	4.96e+08	0.00e+00	0.00e+00	1.56e+08	1.17e+09	0.00e+00	1.91e+08
CO-58	0.00e+00	1.41e+07	0.00e+00	0.00e+00	0.00e+00	1.94e+08	0.00e+00	3.24e+07
CO-60	0.00e+00	5.84e+07	0.00e+00	0.00e+00	0.00e+00	7.60e+08	0.00e+00	1.31e+08
NI-63	1.52e+10	1.07e+09	0.00e+00	0.00e+00	0.00e+00	1.71e+08	0.00e+00	5.15e+08
NI-65	2.26e-52	2.88e-53	0.00e+00	0.00e+00	0.00e+00	1.56e-51	0.00e+00	1.31e-53
CU-64	0.00e+00	2.30e-07	0.00e+00	5.81e-07	0.00e+00	1.78e-05	0.00e+00	1.08e-07
ZN-65	2.50e+08	8.69e+08	0.00e+00	5.56e+08	0.00e+00	3.68e+08	0.00e+00	4.05e+08
RB-86	0.00e+00	4.07e+08	0.00e+00	0.00e+00	0.00e+00	6.02e+07	0.00e+00	1.91e+08
SR-89	2.55e+08	0.00e+00	0.00e+00	0.00e+00	0.00e+00	3.03e+07	0.00e+00	7.29e+06
SR-90	8.05e+09	0.00e+00	0.00e+00	0.00e+00	0.00e+00	2.26e+08	0.00e+00	1.99e+09
SR-91	1.34e-10	0.00e+00	0.00e+00	0.00e+00	0.00e+00	6.08e-10	0.00e+00	5.33e-12
SR-92	1.17e-49	0.00e+00	0.00e+00	0.00e+00	0.00e+00	2.98e-48	0.00e+00	4.98e-51
Y-90	9.12e+01	0.00e+00	0.00e+00	0.00e+00	0.00e+00	7.53e+05	0.00e+00	2.46e+00
Y-91	9.54e+05	0.00e+00	0.00e+00	0.00e+00	0.00e+00	3.91e+08	0.00e+00	2.56e+04
Y-92	1.46e-39	0.00e+00	0.00e+00	0.00e+00	0.00e+00	4.01e-35	0.00e+00	4.22e-41
Y-93	4.14e-12	0.00e+00	0.00e+00	0.00e+00	0.00e+00	1.27e-07	0.00e+00	1.14e-13
ZR-95	1.50e+06	4.73e+05	0.00e+00	6.96e+05	0.00e+00	1.09e+09	0.00e+00	3.26e+05
ZR-97	1.77e-05	3.50e-06	0.00e+00	5.31e-06	0.00e+00	9.49e-01	0.00e+00	1.61e-06
NB-95	1.80e+06	9.96e+05	0.00e+00	9.65e+05	0.00e+00	4.26e+09	0.00e+00	5.48e+05
MO-99	0.00e+00	8.33e+04	0.00e+00	1.91e+05	0.00e+00	1.49e+05	0.00e+00	1.59e+04
TC-99M	3.81e-21	1.06e-20	0.00e+00	1.58e-19	5.90e-21	6.98e-18	0.00e+00	1.38e-19
RU-103	8.57e+07	0.00e+00	0.00e+00	3.02e+08	0.00e+00	7.16e+09	0.00e+00	3.66e+07
RU-105	5.35e-28	0.00e+00	0.00e+00	6.75e-27	0.00e+00	4.32e-25	0.00e+00	2.08e-28
RU-106	2.36e+09	0.00e+00	0.00e+00	4.55e+09	0.00e+00	1.13e+11	0.00e+00	2.97e+08
AG-110M	5.06e+06	4.79e+06	0.00e+00	9.13e+06	0.00e+00	1.35e+09	0.00e+00	2.91e+06
TE-125M	3.03e+08	1.09e+08	8.47e+07	0.00e+00	0.00e+00	8.95e+08	0.00e+00	4.05e+07
TE-127	1.89e-10	6.70e-11	1.30e-10	7.66e-10	0.00e+00	1.46e-08	0.00e+00	4.07e-11
TE-127M	9.42e+08	3.34e+08	2.24e+08	3.82e+09	0.00e+00	2.35e+09	0.00e+00	1.12e+08
TE-129M	9.51e+08	3.53e+08	3.07e+08	3.98e+09	0.00e+00	3.57e+09	0.00e+00	1.50e+08
TE-131M	3.82e+02	1.83e+02	2.75e+02	1.91e+03	0.00e+00	1.47e+04	0.00e+00	1.53e+02

DOSE FACTORS: RADIONUCLIDES OTHER THAN NOBLE GASES
(Ref.3.9 Ch. 5.2, 5.3)

Units: Airborne Pathways & Tritium Ingestion: (mrem/yr)/(µCi/m^3))
Deposition Pathways: (m^2 * (mrem/yr)/(µCi/sec)
AgeGroup: TEEN
Pathway: Grs/Cow/Meat (CMEAT)

Nuclide	Bone	Liver	Thyroid	Kidney	Lung	GI-Lli	Skin	TB
TE-132	1.17e+06	7.40e+05	7.80e+05	7.10e+06	0.00e+00	2.34e+07	0.00e+00	6.97e+05
I-130	8.81e-07	2.55e-06	2.08e-04	3.92e-06	0.00e+00	1.96e-06	0.00e+00	1.02e-06
I-131	4.47e+06	6.26e+06	1.83e+09	1.08e+07	0.00e+00	1.24e+06	0.00e+00	3.36e+06
I-132	3.45e-59	9.03e-59	3.04e-57	1.42e-58	0.00e+00	3.93e-59	0.00e+00	3.24e-59
I-133	1.56e-01	2.65e-01	3.70e+01	4.65e-01	0.00e+00	2.00e-01	0.00e+00	8.08e-02
I-135	1.93e-17	4.97e-17	3.20e-15	7.84e-17	0.00e+00	5.50e-17	0.00e+00	1.84e-17
CS-134	5.23e+08	1.23e+09	0.00e+00	3.91e+08	1.49e+08	1.53e+07	0.00e+00	5.71e+08
CS-136	9.41e+06	3.70e+07	0.00e+00	2.02e+07	3.18e+06	2.98e+06	0.00e+00	2.49e+07
CS-137	7.24e+08	9.63e+08	0.00e+00	3.28e+08	1.27e+08	1.37e+07	0.00e+00	3.36e+08
BA-140	2.38e+07	2.92e+04	0.00e+00	9.88e+03	1.96e+04	3.67e+07	0.00e+00	1.53e+06
LA-140	3.09e-02	1.52e-02	0.00e+00	0.00e+00	0.00e+00	8.71e+02	0.00e+00	4.04e-03
LA-142	3.79e-92	1.68e-92	0.00e+00	0.00e+00	0.00e+00	5.13e-88	0.00e+00	4.19e-93
CE-141	1.18e+04	7.88e+03	0.00e+00	3.71e+03	0.00e+00	2.25e+07	0.00e+00	9.05e+02
CE-143	1.71e-02	1.25e+01	0.00e+00	5.59e-03	0.00e+00	3.75e+02	0.00e+00	1.39e-03
CE-144	1.23e+06	5.08e+05	0.00e+00	3.04e+05	0.00e+00	3.09e+08	0.00e+00	6.60e+04
PR-143	1.77e+04	7.05e+03	0.00e+00	4.10e+03	0.00e+00	5.81e+07	0.00e+00	8.79e+02
ND-147	6.24e+03	6.79e+03	0.00e+00	3.99e+03	0.00e+00	2.45e+07	0.00e+00	4.07e+02
W-187	1.76e-02	1.44e-02	0.00e+00	0.00e+00	0.00e+00	3.89e+00	0.00e+00	5.04e-03
NP-239	2.28e-01	2.15e-02	0.00e+00	6.76e-02	0.00e+00	3.46e+03	0.00e+00	1.20e-02
PU-239	1.74e+07	2.11e+06	0.00e+00	1.94e+06	0.00e+00	1.60e+06	0.00e+00	4.56e+05
U-235	6.28e+08	0.00e+00	0.00e+00	1.47e+08	0.00e+00	4.56e+07	0.00e+00	3.82e+07

DOSE FACTORS: RADIONUCLIDES OTHER THAN NOBLE GASES
(Ref.3.9 Ch. 5.2, 5.3)

Units: Airborne Pathways & Tritium Ingestion: (mrem/yr)/(µCi/m^3))
Deposition Pathways: (m^2 * (mrem/yr)/(µCi/sec)
AgeGroup: TEEN
Pathway: Grs/Cow/Milk (CMILK)

Nuclide	Bone	Liver	Thyroid	Kidney	Lung	GI-Lli	Skin	TB
H-3	0.00e+00	9.94e+02	9.94e+02	9.94e+02	9.94e+02	9.94e+02	0.00e+00	9.94e+02
C-14	4.86e+08	9.72e+07	9.72e+07	9.72e+07	9.72e+07	9.72e+07	0.00e+00	9.72e+07
NA-24	4.27e+06	4.27e+06	4.27e+06	4.27e+06	4.27e+06	4.27e+06	0.00e+00	4.27e+06
P-32	4.90e+09	1.96e+09	0.00e+00	0.00e+00	0.00e+00	2.65e+09	0.00e+00	1.22e+09
CR-51	0.00e+00	0.00e+00	2.77e+04	1.09e+04	7.13e+04	8.39e+06	0.00e+00	4.99e+04
MN-54	0.00e+00	1.40e+07	0.00e+00	4.18e+06	0.00e+00	2.88e+07	0.00e+00	2.78e+06
MN-56	0.00e+00	7.49e-03	0.00e+00	9.48e-03	0.00e+00	4.93e-01	0.00e+00	1.33e-03
FE-55	4.45e+07	3.16e+07	0.00e+00	0.00e+00	2.00e+07	1.37e+07	0.00e+00	7.36e+06
FE-59	5.18e+07	1.21e+08	0.00e+00	0.00e+00	3.82e+07	2.86e+08	0.00e+00	4.67e+07
CO-58	0.00e+00	7.94e+06	0.00e+00	0.00e+00	0.00e+00	1.09e+08	0.00e+00	1.83e+07
CO-60	0.00e+00	2.78e+07	0.00e+00	0.00e+00	0.00e+00	3.62e+08	0.00e+00	6.26e+07
NI-63	1.18e+10	8.35e+08	0.00e+00	0.00e+00	0.00e+00	1.33e+08	0.00e+00	4.01e+08
NI-65	6.90e-01	8.81e-02	0.00e+00	0.00e+00	0.00e+00	4.78e+00	0.00e+00	4.01e-02
CU-64	0.00e+00	4.26e+04	0.00e+00	1.08e+05	0.00e+00	3.31e+06	0.00e+00	2.01e+04
ZN-65	2.11e+09	7.32e+09	0.00e+00	4.68e+09	0.00e+00	3.10e+09	0.00e+00	3.41e+09
ZN-69	4.05e-12	7.71e-12	0.00e+00	5.04e-12	0.00e+00	1.42e-11	0.00e+00	5.39e-13
BR-83	0.00e+00	0.00e+00	0.00e+00	0.00e+00	0.00e+00	0.00e+00	0.00e+00	1.83e-01
BR-84	0.00e+00	0.00e+00	0.00e+00	0.00e+00	0.00e+00	0.00e+00	0.00e+00	3.14e-23
RB-86	0.00e+00	4.73e+09	0.00e+00	0.00e+00	0.00e+00	7.00e+08	0.00e+00	2.22e+09
RB-88	0.00e+00	4.53e-45	0.00e+00	0.00e+00	0.00e+00	3.88e-52	0.00e+00	2.42e-45
RB-89	0.00e+00	1.17e-53	0.00e+00	0.00e+00	0.00e+00	1.79e-62	0.00e+00	8.28e-54
SR-89	2.68e+09	0.00e+00	0.00e+00	0.00e+00	0.00e+00	3.19e+08	0.00e+00	7.66e+07
SR-90	6.61e+10	0.00e+00	0.00e+00	0.00e+00	0.00e+00	1.86e+09	0.00e+00	1.63e+10
SR-91	5.34e+04	0.00e+00	0.00e+00	0.00e+00	0.00e+00	2.42e+05	0.00e+00	2.12e+03
SR-92	9.09e-01	0.00e+00	0.00e+00	0.00e+00	0.00e+00	2.32e+01	0.00e+00	3.88e-02
Y-90	1.30e+02	0.00e+00	0.00e+00	0.00e+00	0.00e+00	1.08e+06	0.00e+00	3.51e+00
Y-91	1.58e+04	0.00e+00	0.00e+00	0.00e+00	0.00e+00	6.48e+06	0.00e+00	4.24e+02
Y-91M	1.16e-19	0.00e+00	0.00e+00	0.00e+00	0.00e+00	5.46e-18	0.00e+00	4.42e-21
Y-92	1.04e-04	0.00e+00	0.00e+00	0.00e+00	0.00e+00	2.87e+00	0.00e+00	3.02e-06
Y-93	4.14e-01	0.00e+00	0.00e+00	0.00e+00	0.00e+00	1.26e+04	0.00e+00	1.14e-02
ZR-95	1.65e+03	5.21e+02	0.00e+00	7.65e+02	0.00e+00	1.20e+06	0.00e+00	3.58e+02
ZR-97	7.91e-01	1.57e-01	0.00e+00	2.37e-01	0.00e+00	4.24e+04	0.00e+00	7.21e-02
NB-95	1.41e+05	7.81e+04	0.00e+00	7.57e+04	0.00e+00	3.34e+08	0.00e+00	4.30e+04
MO-99	0.00e+00	4.48e+07	0.00e+00	1.02e+08	0.00e+00	8.02e+07	0.00e+00	8.54e+06
TC-99M	5.80e+00	1.62e+01	0.00e+00	2.41e+02	8.99e+00	1.06e+04	0.00e+00	2.10e+02
TC-101	5.75e-60	8.18e-60	0.00e+00	1.48e-58	4.98e-60	1.40e-66	0.00e+00	8.03e-59
RU-103	1.81e+03	0.00e+00	0.00e+00	6.38e+03	0.00e+00	1.51e+05	0.00e+00	7.74e+02
RU-105	1.58e-03	0.00e+00	0.00e+00	1.99e-02	0.00e+00	1.28e+00	0.00e+00	6.14e-04

DOSE FACTORS: RADIONUCLIDES OTHER THAN NOBLE GASES
(Ref.3.9 Ch. 5.2, 5.3)

Units: Airborne Pathways & Tritium Ingestion: (mrem/yr)/(µCi/m^3))
Deposition Pathways: (m^2 * (mrem/yr)/(µCi/sec)
AgeGroup: TEEN
Pathway: Grs/Cow/Milk (CMILK)

Nuclide	Bone	Liver	Thyroid	Kidney	Lung	GI-Lli	Skin	TB
RU-106	3.75e+04	0.00e+00	0.00e+00	7.24e+04	0.00e+00	1.80e+06	0.00e+00	4.73e+03
AG-110M	9.63e+07	9.11e+07	0.00e+00	1.74e+08	0.00e+00	2.56e+10	0.00e+00	5.54e+07
TE-125M	3.00e+07	1.08e+07	8.39e+06	0.00e+00	0.00e+00	8.86e+07	0.00e+00	4.02e+06
TE-127	1.22e+03	4.31e+02	8.39e+02	4.93e+03	0.00e+00	9.39e+04	0.00e+00	2.62e+02
TE-127M	8.44e+07	2.99e+07	2.01e+07	3.42e+08	0.00e+00	2.10e+08	0.00e+00	1.00e+07
TE-129	5.41e-10	2.02e-10	3.86e-10	2.27e-09	0.00e+00	2.96e-09	0.00e+00	1.32e-10
TE-129M	1.10e+08	4.09e+07	3.55e+07	4.61e+08	0.00e+00	4.13e+08	0.00e+00	1.74e+07
TE-131	7.35e-33	3.03e-33	5.66e-33	3.21e-32	0.00e+00	6.03e-34	0.00e+00	2.30e-33
TE-131M	6.58e+05	3.16e+05	4.75e+05	3.29e+06	0.00e+00	2.53e+07	0.00e+00	2.63e+05
TE-132	4.30e+06	2.72e+06	2.87e+06	2.61e+07	0.00e+00	8.61e+07	0.00e+00	2.56e+06
I-130	3.71e+05	1.07e+06	8.75e+07	1.65e+06	0.00e+00	8.24e+05	0.00e+00	4.28e+05
I-131	2.69e+08	3.76e+08	1.10e+11	6.48e+08	0.00e+00	7.44e+07	0.00e+00	2.02e+08
I-132	1.49e-01	3.89e-01	1.31e+01	6.12e-01	0.00e+00	1.69e-01	0.00e+00	1.40e-01
I-133	3.54e+06	6.01e+06	8.39e+08	1.05e+07	0.00e+00	4.55e+06	0.00e+00	1.83e+06
I-134	1.89e-12	5.00e-12	8.34e-11	7.89e-12	0.00e+00	6.59e-14	0.00e+00	1.80e-12
I-135	1.15e+04	2.96e+04	1.90e+06	4.67e+04	0.00e+00	3.28e+04	0.00e+00	1.10e+04
CS-134	9.82e+09	2.31e+10	0.00e+00	7.34e+09	2.80e+09	2.87e+08	0.00e+00	1.07e+10
CS-136	4.48e+08	1.76e+09	0.00e+00	9.60e+08	1.51e+08	1.42e+08	0.00e+00	1.19e+09
CS-137	1.34e+10	1.78e+10	0.00e+00	6.06e+09	2.35e+09	2.53e+08	0.00e+00	6.20e+09
CS-138	1.79e-23	3.43e-23	0.00e+00	2.53e-23	2.95e-24	1.56e-26	0.00e+00	1.72e-23
BA-139	8.45e-08	5.94e-11	0.00e+00	5.60e-11	4.10e-11	7.53e-07	0.00e+00	2.46e-09
BA-140	4.85e+07	5.95e+04	0.00e+00	2.02e+04	4.00e+04	7.49e+07	0.00e+00	3.13e+06
BA-141	8.74e-46	6.53e-49	0.00e+00	6.06e-49	4.47e-49	1.86e-51	0.00e+00	2.92e-47
BA-142	6.22e-80	6.22e-83	0.00e+00	5.26e-83	4.14e-83	1.91e-91	0.00e+00	3.83e-81
LA-140	8.11e+00	3.99e+00	0.00e+00	0.00e+00	0.00e+00	2.29e+05	0.00e+00	1.06e+00
LA-142	3.45e-11	1.53e-11	0.00e+00	0.00e+00	0.00e+00	4.67e-07	0.00e+00	3.82e-12
CE-141	8.88e+03	5.93e+03	0.00e+00	2.79e+03	0.00e+00	1.70e+07	0.00e+00	6.81e+02
CE-143	7.65e+01	5.57e+04	0.00e+00	2.50e+01	0.00e+00	1.67e+06	0.00e+00	6.22e+00
CE-144	6.58e+05	2.72e+05	0.00e+00	1.63e+05	0.00e+00	1.66e+08	0.00e+00	3.54e+04
PR-143	2.90e+02	1.16e+02	0.00e+00	6.73e+01	0.00e+00	9.55e+05	0.00e+00	1.44e+01
PR-144	1.27e-53	5.19e-54	0.00e+00	2.98e-54	0.00e+00	1.40e-56	0.00e+00	6.43e-55
ND-147	1.81e+02	1.97e+02	0.00e+00	1.16e+02	0.00e+00	7.11e+05	0.00e+00	1.18e+01
W-187	1.19e+04	9.73e+03	0.00e+00	0.00e+00	0.00e+00	2.63e+06	0.00e+00	3.41e+03
NP-239	7.02e+00	6.62e-01	0.00e+00	2.08e+00	0.00e+00	1.06e+05	0.00e+00	3.67e-01
PU-239	3.82e+07	4.63e+06	0.00e+00	4.27e+06	0.00e+00	3.52e+06	0.00e+00	1.00e+06
U-235	5.68e+09	0.00e+00	0.00e+00	1.33e+09	0.00e+00	4.13e+08	0.00e+00	3.46e+08

DOSE FACTORS: RADIONUCLIDES OTHER THAN NOBLE GASES
(Ref.3.9 Ch. 5.2, 5.3)

Units: Airborne Pathways & Tritium Ingestion: (mrem/yr)/(µCi/m^3))
Deposition Pathways: (m^2 * (mrem/yr)/(µCi/sec)
AgeGroup: TEEN
Pathway: Vegetation (VEG)

Nuclide	Bone	Liver	Thyroid	Kidney	Lung	GI-Lli	Skin	TB
H-3	0.00e+00	2.59e+03	2.59e+03	2.59e+03	2.59e+03	2.59e+03	0.00e+00	2.59e+03
C-14	3.69e+08	7.38e+07	7.38e+07	7.38e+07	7.38e+07	7.38e+07	0.00e+00	7.38e+07
NA-24	2.38e+05	2.38e+05	2.38e+05	2.38e+05	2.38e+05	2.38e+05	0.00e+00	2.38e+05
P-32	2.50e+08	9.97e+07	0.00e+00	0.00e+00	0.00e+00	1.35e+08	0.00e+00	6.24e+07
CR-51	0.00e+00	0.00e+00	3.43e+04	1.35e+04	8.80e+04	1.04e+07	0.00e+00	6.17e+04
MN-54	0.00e+00	4.54e+08	0.00e+00	1.36e+08	0.00e+00	9.32e+08	0.00e+00	9.01e+07
MN-56	0.00e+00	1.39e+01	0.00e+00	1.76e+01	0.00e+00	9.18e+02	0.00e+00	2.48e+00
FE-55	3.26e+08	2.31e+08	0.00e+00	0.00e+00	1.47e+08	1.00e+08	0.00e+00	5.39e+07
FE-59	1.79e+08	4.19e+08	0.00e+00	0.00e+00	1.32e+08	9.90e+08	0.00e+00	1.62e+08
CO-58	0.00e+00	4.36e+07	0.00e+00	0.00e+00	0.00e+00	6.01e+08	0.00e+00	1.00e+08
CO-60	0.00e+00	2.49e+08	0.00e+00	0.00e+00	0.00e+00	3.24e+09	0.00e+00	5.60e+08
NI-63	1.61e+10	1.14e+09	0.00e+00	0.00e+00	0.00e+00	1.81e+08	0.00e+00	5.45e+08
NI-65	5.56e+01	7.11e+00	0.00e+00	0.00e+00	0.00e+00	3.85e+02	0.00e+00	3.24e+00
CU-64	0.00e+00	8.29e+03	0.00e+00	2.10e+04	0.00e+00	6.43e+05	0.00e+00	3.90e+03
ZN-65	4.24e+08	1.47e+09	0.00e+00	9.42e+08	0.00e+00	6.23e+08	0.00e+00	6.87e+08
ZN-69	4.75e-06	9.06e-06	0.00e+00	5.92e-06	0.00e+00	1.67e-05	0.00e+00	6.34e-07
BR-83	0.00e+00	0.00e+00	0.00e+00	0.00e+00	0.00e+00	0.00e+00	0.00e+00	2.82e+00
BR-84	0.00e+00	0.00e+00	0.00e+00	0.00e+00	0.00e+00	0.00e+00	0.00e+00	1.96e-11
RB-86	0.00e+00	2.74e+08	0.00e+00	0.00e+00	0.00e+00	4.05e+07	0.00e+00	1.29e+08
RB-88	0.00e+00	2.47e-22	0.00e+00	0.00e+00	0.00e+00	2.12e-29	0.00e+00	1.32e-22
RB-89	0.00e+00	9.33e-27	0.00e+00	0.00e+00	0.00e+00	1.43e-35	0.00e+00	6.60e-27
SR-89	1.51e+10	0.00e+00	0.00e+00	0.00e+00	0.00e+00	1.80e+09	0.00e+00	4.34e+08
SR-90	7.51e+11	0.00e+00	0.00e+00	0.00e+00	0.00e+00	2.11e+10	0.00e+00	1.85e+11
SR-91	2.83e+05	0.00e+00	0.00e+00	0.00e+00	0.00e+00	1.28e+06	0.00e+00	1.12e+04
SR-92	3.87e+02	0.00e+00	0.00e+00	0.00e+00	0.00e+00	9.85e+03	0.00e+00	1.65e+01
Y-90	1.24e+04	0.00e+00	0.00e+00	0.00e+00	0.00e+00	1.02e+08	0.00e+00	3.34e+02
Y-91	7.83e+06	0.00e+00	0.00e+00	0.00e+00	0.00e+00	3.21e+09	0.00e+00	2.10e+05
Y-91M	4.45e-09	0.00e+00	0.00e+00	0.00e+00	0.00e+00	2.10e-07	0.00e+00	1.70e-10
Y-92	8.43e-01	0.00e+00	0.00e+00	0.00e+00	0.00e+00	2.31e+04	0.00e+00	2.44e-02
Y-93	1.58e+02	0.00e+00	0.00e+00	0.00e+00	0.00e+00	4.82e+06	0.00e+00	4.33e+00
ZR-95	1.72e+06	5.43e+05	0.00e+00	7.98e+05	0.00e+00	1.25e+09	0.00e+00	3.73e+05
ZR-97	3.11e+02	6.15e+01	0.00e+00	9.33e+01	0.00e+00	1.67e+07	0.00e+00	2.83e+01
NB-95	1.92e+05	1.07e+05	0.00e+00	1.03e+05	0.00e+00	4.56e+08	0.00e+00	5.87e+04
MO-99	0.00e+00	5.64e+06	0.00e+00	1.29e+07	0.00e+00	1.01e+07	0.00e+00	1.08e+06
TC-99M	2.70e+00	7.54e+00	0.00e+00	1.12e+02	4.19e+00	4.95e+03	0.00e+00	9.77e+01
TC-101	5.60e-31	7.97e-31	0.00e+00	1.44e-29	4.86e-31	1.36e-37	0.00e+00	7.83e-30
RU-103	6.82e+06	0.00e+00	0.00e+00	2.40e+07	0.00e+00	5.70e+08	0.00e+00	2.91e+06
RU-105	4.92e+01	0.00e+00	0.00e+00	6.21e+02	0.00e+00	3.97e+04	0.00e+00	1.91e+01

DOSE FACTORS: RADIONUCLIDES OTHER THAN NOBLE GASES
(Ref.3.9 Ch. 5.2, 5.3)

Units: Airborne Pathways & Tritium Ingestion: (mrem/yr)/(µCi/m^3))
Deposition Pathways: (m^2 * (mrem/yr)/(µCi/sec)
AgeGroup: TEEN
Pathway: Vegetation (VEG)

Nuclide	Bone	Liver	Thyroid	Kidney	Lung	GI-Lli	Skin	TB
RU-106	3.10e+08	0.00e+00	0.00e+00	5.97e+08	0.00e+00	1.48e+10	0.00e+00	3.90e+07
AG-110M	1.52e+07	1.43e+07	0.00e+00	2.74e+07	0.00e+00	4.03e+09	0.00e+00	8.72e+06
TE-125M	1.48e+08	5.34e+07	4.14e+07	0.00e+00	0.00e+00	4.37e+08	0.00e+00	1.98e+07
TE-127	5.30e+03	1.88e+03	3.65e+03	2.15e+04	0.00e+00	4.09e+05	0.00e+00	1.14e+03
TE-127M	5.51e+08	1.96e+08	1.31e+08	2.24e+09	0.00e+00	1.37e+09	0.00e+00	6.56e+07
TE-129	6.70e-04	2.50e-04	4.79e-04	2.81e-03	0.00e+00	3.66e-03	0.00e+00	1.63e-04
TE-129M	3.62e+08	1.34e+08	1.17e+08	1.51e+09	0.00e+00	1.36e+09	0.00e+00	5.72e+07
TE-131	1.17e-15	4.82e-16	9.01e-16	5.11e-15	0.00e+00	9.60e-17	0.00e+00	3.66e-16
TE-131M	8.42e+05	4.04e+05	6.08e+05	4.21e+06	0.00e+00	3.24e+07	0.00e+00	3.37e+05
TE-132	3.91e+06	2.47e+06	2.61e+06	2.37e+07	0.00e+00	7.83e+07	0.00e+00	2.33e+06
I-130	1.74e+05	5.05e+05	4.11e+07	7.77e+05	0.00e+00	3.88e+05	0.00e+00	2.02e+05
I-131	3.84e+07	5.38e+07	1.57e+10	9.26e+07	0.00e+00	1.06e+07	0.00e+00	2.89e+07
I-132	2.51e+01	6.58e+01	2.22e+03	1.04e+02	0.00e+00	2.87e+01	0.00e+00	2.36e+01
I-133	9.65e+05	1.64e+06	2.29e+08	2.87e+06	0.00e+00	1.24e+06	0.00e+00	5.00e+05
I-134	4.01e-05	1.06e-04	1.77e-03	1.68e-04	0.00e+00	1.40e-06	0.00e+00	3.82e-05
I-135	1.74e+04	4.48e+04	2.88e+06	7.08e+04	0.00e+00	4.97e+04	0.00e+00	1.66e+04
CS-134	7.10e+09	1.67e+10	0.00e+00	5.31e+09	2.03e+09	2.08e+08	0.00e+00	7.75e+09
CS-136	4.37e+07	1.72e+08	0.00e+00	9.36e+07	1.48e+07	1.38e+07	0.00e+00	1.16e+08
CS-137	1.01e+10	1.35e+10	0.00e+00	4.59e+09	1.78e+09	1.92e+08	0.00e+00	4.70e+09
CS-138	3.15e-11	6.05e-11	0.00e+00	4.47e-11	5.20e-12	2.74e-14	0.00e+00	3.02e-11
BA-139	2.55e-02	1.79e-05	0.00e+00	1.69e-05	1.24e-05	2.27e-01	0.00e+00	7.42e-04
BA-140	1.38e+08	1.69e+05	0.00e+00	5.74e+04	1.14e+05	2.13e+08	0.00e+00	8.89e+06
BA-141	8.46e-22	6.31e-25	0.00e+00	5.86e-25	4.32e-25	1.80e-27	0.00e+00	2.82e-23
BA-142	3.65e-39	3.65e-42	0.00e+00	3.08e-42	2.43e-42	1.12e-50	0.00e+00	2.24e-40
LA-140	1.80e+03	8.86e+02	0.00e+00	0.00e+00	0.00e+00	5.09e+07	0.00e+00	2.36e+02
LA-142	1.77e-04	7.86e-05	0.00e+00	0.00e+00	0.00e+00	2.39e+00	0.00e+00	1.96e-05
CE-141	2.83e+05	1.89e+05	0.00e+00	8.89e+04	0.00e+00	5.40e+08	0.00e+00	2.17e+04
CE-143	9.31e+02	6.77e+05	0.00e+00	3.04e+02	0.00e+00	2.04e+07	0.00e+00	7.57e+01
CE-144	5.27e+07	2.18e+07	0.00e+00	1.30e+07	0.00e+00	1.33e+10	0.00e+00	2.83e+06
PR-143	7.00e+04	2.79e+04	0.00e+00	1.62e+04	0.00e+00	2.30e+08	0.00e+00	3.48e+03
PR-144	2.24e-26	9.18e-27	0.00e+00	5.27e-27	0.00e+00	2.47e-29	0.00e+00	1.14e-27
ND-147	3.62e+04	3.94e+04	0.00e+00	2.31e+04	0.00e+00	1.42e+08	0.00e+00	2.36e+03
W-187	3.53e+04	2.88e+04	0.00e+00	0.00e+00	0.00e+00	7.78e+06	0.00e+00	1.01e+04
NP-239	1.38e+03	1.31e+02	0.00e+00	4.10e+02	0.00e+00	2.10e+07	0.00e+00	7.25e+01
PU-239	6.95e+10	8.44e+09	0.00e+00	7.79e+09	0.00e+00	6.42e+09	0.00e+00	1.83e+09
U-235	1.04e+11	0.00e+00	0.00e+00	2.43e+10	0.00e+00	7.53e+09	0.00e+00	6.31e+09

DOSE FACTORS: RADIONUCLIDES OTHER THAN NOBLE GASES
(Ref.3.9 Ch. 5.2, 5.3)

Units: Airborne Pathways & Tritium Ingestion: (mrem/yr)/(µCi/m^3))
Deposition Pathways: (m^2 * (mrem/yr)/(µCi/sec)
AgeGroup: CHILD
Pathway: Grs/Goat/Milk (GMILK)

Nuclide	Bone	Liver	Thyroid	Kidney	Lung	GI-Lli	Skin	TB
H-3	0.00e+00	3.20e+03	3.20e+03	3.20e+03	3.20e+03	3.20e+03	0.00e+00	3.20e+03
C-14	1.20e+09	2.39e+08	2.39e+08	2.39e+08	2.39e+08	2.39e+08	0.00e+00	2.39e+08
NA-24	1.07e+06	1.07e+06	1.07e+06	1.07e+06	1.07e+06	1.07e+06	0.00e+00	1.07e+06
P-32	1.45e+10	4.37e+09	0.00e+00	0.00e+00	0.00e+00	2.58e+09	0.00e+00	3.60e+09
CR-51	0.00e+00	0.00e+00	6.78e+03	1.85e+03	1.24e+04	6.48e+05	0.00e+00	1.22e+04
MN-54	0.00e+00	2.52e+06	0.00e+00	7.06e+05	0.00e+00	2.11e+06	0.00e+00	6.70e+05
MN-56	0.00e+00	1.57e-03	0.00e+00	1.90e-03	0.00e+00	2.27e-01	0.00e+00	3.54e-04
FE-55	1.45e+06	7.71e+05	0.00e+00	0.00e+00	4.36e+05	1.43e+05	0.00e+00	2.39e+05
FE-59	1.56e+06	2.53e+06	0.00e+00	0.00e+00	7.33e+05	2.63e+06	0.00e+00	1.26e+06
CO-58	0.00e+00	1.46e+06	0.00e+00	0.00e+00	0.00e+00	8.49e+06	0.00e+00	4.45e+06
CO-60	0.00e+00	5.18e+06	0.00e+00	0.00e+00	0.00e+00	2.87e+07	0.00e+00	1.53e+07
NI-63	3.56e+09	1.91e+08	0.00e+00	0.00e+00	0.00e+00	1.28e+07	0.00e+00	1.21e+08
NI-65	2.02e-01	1.91e-02	0.00e+00	0.00e+00	0.00e+00	2.33e+00	0.00e+00	1.11e-02
CU-64	0.00e+00	8.35e+03	0.00e+00	2.02e+04	0.00e+00	3.92e+05	0.00e+00	5.04e+03
ZN-65	4.96e+08	1.32e+09	0.00e+00	8.33e+08	0.00e+00	2.32e+08	0.00e+00	8.22e+08
ZN-69	1.19e-12	1.73e-12	0.00e+00	1.05e-12	0.00e+00	1.09e-10	0.00e+00	1.59e-13
BR-83	0.00e+00	0.00e+00	0.00e+00	0.00e+00	0.00e+00	0.00e+00	0.00e+00	5.38e-02
BR-84	0.00e+00	0.00e+00	0.00e+00	0.00e+00	0.00e+00	0.00e+00	0.00e+00	8.51e-24
RB-86	0.00e+00	1.05e+09	0.00e+00	0.00e+00	0.00e+00	6.77e+07	0.00e+00	6.47e+08
RB-88	0.00e+00	1.00e-45	0.00e+00	0.00e+00	0.00e+00	4.91e-47	0.00e+00	6.95e-46
RB-89	0.00e+00	2.46e-54	0.00e+00	0.00e+00	0.00e+00	2.15e-56	0.00e+00	2.19e-54
SR-89	1.39e+10	0.00e+00	0.00e+00	0.00e+00	0.00e+00	5.38e+08	0.00e+00	3.97e+08
SR-90	2.35e+11	0.00e+00	0.00e+00	0.00e+00	0.00e+00	3.16e+09	0.00e+00	5.95e+10
SR-91	2.75e+05	0.00e+00	0.00e+00	0.00e+00	0.00e+00	6.08e+05	0.00e+00	1.04e+04
SR-92	4.66e+00	0.00e+00	0.00e+00	0.00e+00	0.00e+00	8.83e+01	0.00e+00	1.87e-01
Y-90	3.87e+01	0.00e+00	0.00e+00	0.00e+00	0.00e+00	1.10e+05	0.00e+00	1.04e+00
Y-91	4.68e+03	0.00e+00	0.00e+00	0.00e+00	0.00e+00	6.24e+05	0.00e+00	1.25e+02
Y-91M	3.39e-20	0.00e+00	0.00e+00	0.00e+00	0.00e+00	6.65e-17	0.00e+00	1.23e-21
Y-92	3.08e-05	0.00e+00	0.00e+00	0.00e+00	0.00e+00	8.89e-01	0.00e+00	8.80e-07
Y-93	1.22e-01	0.00e+00	0.00e+00	0.00e+00	0.00e+00	1.82e+03	0.00e+00	3.35e-03
ZR-95	4.60e+02	1.01e+02	0.00e+00	1.45e+02	0.00e+00	1.05e+05	0.00e+00	9.00e+01
ZR-97	2.31e-01	3.34e-02	0.00e+00	4.79e-02	0.00e+00	5.05e+03	0.00e+00	1.97e-02
NB-95	3.82e+04	1.49e+04	0.00e+00	1.40e+04	0.00e+00	2.75e+07	0.00e+00	1.06e+04
MO-99	0.00e+00	9.77e+06	0.00e+00	2.09e+07	0.00e+00	8.08e+06	0.00e+00	2.42e+06
TC-99M	1.60e+00	3.13e+00	0.00e+00	4.55e+01	1.59e+00	1.78e+03	0.00e+00	5.19e+01
TC-101	1.69e-60	1.77e-60	0.00e+00	3.02e-59	9.36e-61	5.63e-60	0.00e+00	2.24e-59
RU-103	5.14e+02	0.00e+00	0.00e+00	1.29e+03	0.00e+00	1.33e+04	0.00e+00	1.98e+02
RU-105	4.63e-04	0.00e+00	0.00e+00	4.07e-03	0.00e+00	3.02e-01	0.00e+00	1.68e-04

DOSE FACTORS: RADIONUCLIDES OTHER THAN NOBLE GASES
(Ref.3.9 Ch. 5.2, 5.3)

Units: Airborne Pathways & Tritium Ingestion: (mrem/yr)/(µCi/m^3))
Deposition Pathways: (m^2 * (mrem/yr)/(µCi/sec)
AgeGroup: CHILD
Pathway: Grs/Goat/Milk (GMILK)

Nuclide	Bone	Liver	Thyroid	Kidney	Lung	GI-Lli	Skin	TB
RU-106	1.11e+04	0.00e+00	0.00e+00	1.50e+04	0.00e+00	1.73e+05	0.00e+00	1.38e+03
AG-110M	2.51e+07	1.69e+07	0.00e+00	3.15e+07	0.00e+00	2.01e+09	0.00e+00	1.35e+07
TE-125M	8.85e+06	2.40e+06	2.49e+06	0.00e+00	0.00e+00	8.54e+06	0.00e+00	1.18e+06
TE-127	3.59e+02	9.68e+01	2.48e+02	1.02e+03	0.00e+00	1.40e+04	0.00e+00	7.70e+01
TE-127M	2.50e+07	6.72e+06	5.97e+06	7.12e+07	0.00e+00	2.02e+07	0.00e+00	2.96e+06
TE-129	1.60e-10	4.47e-11	1.14e-10	4.68e-10	0.00e+00	9.97e-09	0.00e+00	3.80e-11
TE-129M	3.26e+07	9.10e+06	1.05e+07	9.56e+07	0.00e+00	3.97e+07	0.00e+00	5.06e+06
TE-131	2.16e-33	6.60e-34	1.66e-33	6.54e-33	0.00e+00	1.14e-32	0.00e+00	6.44e-34
TE-131M	1.92e+05	6.65e+04	1.37e+05	6.44e+05	0.00e+00	2.70e+06	0.00e+00	7.08e+04
TE-132	1.23e+06	5.45e+05	7.93e+05	5.06e+06	0.00e+00	5.48e+06	0.00e+00	6.58e+05
I-130	1.04e+06	2.10e+06	2.32e+08	3.14e+06	0.00e+00	9.83e+05	0.00e+00	1.08e+06
I-131	7.82e+08	7.87e+08	2.60e+11	1.29e+09	0.00e+00	7.00e+07	0.00e+00	4.47e+08
I-132	4.22e-01	7.75e-01	3.60e+01	1.19e+00	0.00e+00	9.12e-01	0.00e+00	3.56e-01
I-133	1.03e+07	1.28e+07	2.37e+09	2.13e+07	0.00e+00	5.15e+06	0.00e+00	4.83e+06
I-134	5.36e-12	9.96e-12	2.29e-10	1.52e-11	0.00e+00	6.61e-12	0.00e+00	4.58e-12
I-135	3.26e+04	5.87e+04	5.20e+06	9.00e+04	0.00e+00	4.47e+04	0.00e+00	2.78e+04
CS-134	6.79e+10	1.12e+11	0.00e+00	3.45e+10	1.24e+10	6.01e+08	0.00e+00	2.35e+10
CS-136	3.04e+09	8.35e+09	0.00e+00	4.44e+09	6.63e+08	2.93e+08	0.00e+00	5.40e+09
CS-137	9.67e+10	9.26e+10	0.00e+00	3.02e+10	1.09e+10	5.80e+08	0.00e+00	1.37e+10
CS-138	1.30e-22	1.81e-22	0.00e+00	1.27e-22	1.37e-23	8.32e-23	0.00e+00	1.15e-22
BA-139	2.49e-08	1.33e-11	0.00e+00	1.16e-11	7.82e-12	1.44e-06	0.00e+00	7.22e-10
BA-140	1.41e+07	1.23e+04	0.00e+00	4.01e+03	7.34e+03	7.12e+06	0.00e+00	8.21e+05
BA-141	2.58e-46	1.44e-49	0.00e+00	1.25e-49	8.49e-49	1.47e-46	0.00e+00	8.40e-48
BA-142	1.80e-80	1.30e-83	0.00e+00	1.05e-83	7.62e-84	2.35e-82	0.00e+00	1.01e-81
LA-140	2.33e+00	8.15e-01	0.00e+00	0.00e+00	0.00e+00	2.27e+04	0.00e+00	2.75e-01
LA-142	1.00e-11	3.19e-12	0.00e+00	0.00e+00	0.00e+00	6.32e-07	0.00e+00	9.98e-13
CE-141	2.63e+03	1.31e+03	0.00e+00	5.74e+02	0.00e+00	1.63e+06	0.00e+00	1.94e+02
CE-143	2.25e+01	1.22e+04	0.00e+00	5.12e+00	0.00e+00	1.79e+05	0.00e+00	1.77e+00
CE-144	1.95e+05	6.11e+04	0.00e+00	3.38e+04	0.00e+00	1.59e+07	0.00e+00	1.04e+04
PR-143	8.62e+01	2.59e+01	0.00e+00	1.40e+01	0.00e+00	9.30e+04	0.00e+00	4.28e+00
PR-144	3.76e-54	1.16e-54	0.00e+00	6.16e-55	0.00e+00	2.51e-51	0.00e+00	1.89e-55
ND-147	5.34e+01	4.32e+01	0.00e+00	2.37e+01	0.00e+00	6.85e+04	0.00e+00	3.35e+00
W-187	3.47e+03	2.06e+03	0.00e+00	0.00e+00	0.00e+00	2.89e+05	0.00e+00	9.23e+02
NP-239	2.07e+00	1.49e-01	0.00e+00	4.30e-01	0.00e+00	1.10e+04	0.00e+00	1.05e-01
PU-239	6.37e+06	6.81e+05	0.00e+00	6.02e+05	0.00e+00	3.38e+05	0.00e+00	1.63e+05
U-235	1.69e+09	0.00e+00	0.00e+00	2.77e+08	0.00e+00	3.96e+07	0.00e+00	1.02e+08

DOSE FACTORS: RADIONUCLIDES OTHER THAN NOBLE GASES
(Ref.3.9 Ch. 5.2, 5.3)

Units: Airborne Pathways & Tritium Ingestion: (mrem/yr)/(µCi/m^3))
Deposition Pathways: (m^2 * (mrem/yr)/(µCi/sec)
AgeGroup: CHILD
Pathway: Ground Plane Deposition (GPD)

Nuclide	Bone	Liver	Thyroid	Kidney	Lung	GI-Lli	Skin	TB
NA-24	1.20e+07	1.20e+07	1.20e+07	1.20e+07	1.20e+07	1.20e+07	1.39e+07	1.20e+07
CR-51	4.66e+06	4.66e+06	4.66e+06	4.66e+06	4.66e+06	4.66e+06	5.51e+06	4.66e+06
MN-54	1.39e+09	1.39e+09	1.39e+09	1.39e+09	1.39e+09	1.39e+09	1.63e+09	1.39e+09
MN-56	9.04e+05	9.04e+05	9.04e+05	9.04e+05	9.04e+05	9.04e+05	1.07e+06	9.04e+05
FE-59	2.72e+08	2.72e+08	2.72e+08	2.72e+08	2.72e+08	2.72e+08	3.20e+08	2.72e+08
CO-58	3.79e+08	3.79e+08	3.79e+08	3.79e+08	3.79e+08	3.79e+08	4.43e+08	3.79e+08
CO-60	2.15e+10	2.15e+10	2.15e+10	2.15e+10	2.15e+10	2.15e+10	2.53e+10	2.15e+10
NI-65	2.97e+05	2.97e+05	2.97e+05	2.97e+05	2.97e+05	2.97e+05	3.45e+05	2.97e+05
CU-64	6.07e+05	6.07e+05	6.07e+05	6.07e+05	6.07e+05	6.07e+05	6.88e+05	6.07e+05
ZN-65	7.47e+08	7.47e+08	7.47e+08	7.47e+08	7.47e+08	7.47e+08	8.60e+08	7.47e+08
BR-83	4.87e+03	4.87e+03	4.87e+03	4.87e+03	4.87e+03	4.87e+03	7.08e+03	4.87e+03
BR-84	2.03e+05	2.03e+05	2.03e+05	2.03e+05	2.03e+05	2.03e+05	2.36e+05	2.03e+05
RB-86	8.99e+06	8.99e+06	8.99e+06	8.99e+06	8.99e+06	8.99e+06	1.03e+07	8.99e+06
RB-88	3.31e+04	3.31e+04	3.31e+04	3.31e+04	3.31e+04	3.31e+04	3.78e+04	3.31e+04
RB-89	1.21e+05	1.21e+05	1.21e+05	1.21e+05	1.21e+05	1.21e+05	1.45e+05	1.21e+05
SR-89	2.16e+04	2.16e+04	2.16e+04	2.16e+04	2.16e+04	2.16e+04	2.51e+04	2.16e+04
SR-91	2.15e+06	2.15e+06	2.15e+06	2.15e+06	2.15e+06	2.15e+06	2.51e+06	2.15e+06
SR-92	7.77e+05	7.77e+05	7.77e+05	7.77e+05	7.77e+05	7.77e+05	8.63e+05	7.77e+05
Y-90	4.49e+03	4.49e+03	4.49e+03	4.49e+03	4.49e+03	4.49e+03	5.31e+03	4.49e+03
Y-91	1.07e+06	1.07e+06	1.07e+06	1.07e+06	1.07e+06	1.07e+06	1.21e+06	1.07e+06
Y-91M	1.00e+05	1.00e+05	1.00e+05	1.00e+05	1.00e+05	1.00e+05	1.16e+05	1.00e+05
Y-92	1.80e+05	1.80e+05	1.80e+05	1.80e+05	1.80e+05	1.80e+05	2.14e+05	1.80e+05
Y-93	1.83e+05	1.83e+05	1.83e+05	1.83e+05	1.83e+05	1.83e+05	2.51e+05	1.83e+05
ZR-95	2.45e+08	2.45e+08	2.45e+08	2.45e+08	2.45e+08	2.45e+08	2.84e+08	2.45e+08
ZR-97	2.96e+06	2.96e+06	2.96e+06	2.96e+06	2.96e+06	2.96e+06	3.45e+06	2.96e+06
NB-95	1.37e+08	1.37e+08	1.37e+08	1.37e+08	1.37e+08	1.37e+08	1.61e+08	1.37e+08
MO-99	4.00e+06	4.00e+06	4.00e+06	4.00e+06	4.00e+06	4.00e+06	4.63e+06	4.00e+06
TC-99M	1.84e+05	1.84e+05	1.84e+05	1.84e+05	1.84e+05	1.84e+05	2.11e+05	1.84e+05
TC-101	2.04e+04	2.04e+04	2.04e+04	2.04e+04	2.04e+04	2.04e+04	2.26e+04	2.04e+04
RU-103	1.08e+08	1.08e+08	1.08e+08	1.08e+08	1.08e+08	1.08e+08	1.26e+08	1.08e+08
RU-105	6.37e+05	6.37e+05	6.37e+05	6.37e+05	6.37e+05	6.37e+05	7.21e+05	6.37e+05
RU-106	4.22e+08	4.22e+08	4.22e+08	4.22e+08	4.22e+08	4.22e+08	5.07e+08	4.22e+08
AG-110M	3.44e+09	3.44e+09	3.44e+09	3.44e+09	3.44e+09	3.44e+09	4.01e+09	3.44e+09
TE-125M	1.55e+06	1.55e+06	1.55e+06	1.55e+06	1.55e+06	1.55e+06	2.13e+06	1.55e+06
TE-127	2.98e+03	2.98e+03	2.98e+03	2.98e+03	2.98e+03	2.98e+03	3.28e+03	2.98e+03
TE-127M	9.17e+04	9.17e+04	9.17e+04	9.17e+04	9.17e+04	9.17e+04	1.08e+05	9.17e+04
TE-129	2.62e+04	2.62e+04	2.62e+04	2.62e+04	2.62e+04	2.62e+04	3.10e+04	2.62e+04
TE-129M	1.98e+07	1.98e+07	1.98e+07	1.98e+07	1.98e+07	1.98e+07	2.31e+07	1.98e+07

DOSE FACTORS: RADIONUCLIDES OTHER THAN NOBLE GASES
(Ref.3.9 Ch. 5.2, 5.3)

Units: Airborne Pathways & Tritium Ingestion: (mrem/yr)/(µCi/m^3))
Deposition Pathways: (m^2 * (mrem/yr)/(µCi/sec)
AgeGroup: CHILD
Pathway: Ground Plane Deposition (GPD)

Nuclide	Bone	Liver	Thyroid	Kidney	Lung	GI-Lli	Skin	TB
TE-131	2.92e+04	2.92e+04	2.92e+04	2.92e+04	2.92e+04	2.92e+04	3.45e+07	2.92e+04
TE-131M	8.03e+06	8.03e+06	8.03e+06	8.03e+06	8.03e+06	8.03e+06	9.46e+06	8.03e+06
TE-132	4.24e+06	4.24e+06	4.24e+06	4.24e+06	4.24e+06	4.24e+06	4.98e+06	4.24e+06
I-130	5.51e+06	5.51e+06	5.51e+06	5.51e+06	5.51e+06	5.51e+06	6.69e+06	5.51e+06
I-131	1.72e+07	1.72e+07	1.72e+07	1.72e+07	1.72e+07	1.72e+07	2.09e+07	1.72e+07
I-132	1.25e+06	1.25e+06	1.25e+06	1.25e+06	1.25e+06	1.25e+06	1.47e+06	1.25e+06
I-133	2.45e+06	2.45e+06	2.45e+06	2.45e+06	2.45e+06	2.45e+06	2.98e+06	2.45e+06
I-134	4.47e+05	4.47e+05	4.47e+05	4.47e+05	4.47e+05	4.47e+05	5.31e+05	4.47e+05
I-135	2.53e+06	2.53e+06	2.53e+06	2.53e+06	2.53e+06	2.53e+06	2.95e+06	2.53e+06
CS-134	6.86e+09	6.86e+09	6.86e+09	6.86e+09	6.86e+09	6.86e+09	8.00e+09	6.86e+09
CS-136	1.51e+08	1.51e+08	1.51e+08	1.51e+08	1.51e+08	1.51e+08	1.71e+08	1.51e+08
CS-137	1.03e+10	1.03e+10	1.03e+10	1.03e+10	1.03e+10	1.03e+10	1.20e+10	1.03e+10
CS-138	3.59e+05	3.59e+05	3.59e+05	3.59e+05	3.59e+05	3.59e+05	4.10e+05	3.59e+05
BA-139	1.06e+05	1.06e+05	1.06e+05	1.06e+05	1.06e+05	1.06e+05	1.19e+05	1.06e+05
BA-140	2.05e+07	2.05e+07	2.05e+07	2.05e+07	2.05e+07	2.05e+07	2.35e+07	2.05e+07
BA-141	4.17e+04	4.17e+04	4.17e+04	4.17e+04	4.17e+04	4.17e+04	4.75e+04	4.17e+04
BA-142	4.49e+04	4.49e+04	4.49e+04	4.49e+04	4.49e+04	4.49e+04	5.11e+04	4.49e+04
LA-140	1.92e+07	1.92e+07	1.92e+07	1.92e+07	1.92e+07	1.92e+07	2.18e+07	1.92e+07
LA-142	7.60e+05	7.60e+05	7.60e+05	7.60e+05	7.60e+05	7.60e+05	9.12e+05	7.60e+05
CE-141	1.37e+07	1.37e+07	1.37e+07	1.37e+07	1.37e+07	1.37e+07	1.54e+07	1.37e+07
CE-143	2.31e+06	2.31e+06	2.31e+06	2.31e+06	2.31e+06	2.31e+06	2.63e+06	2.31e+06
CE-144	6.95e+07	6.95e+07	6.95e+07	6.95e+07	6.95e+07	6.95e+07	8.04e+07	6.95e+07
PR-144	1.84e+03	1.84e+03	1.84e+03	1.84e+03	1.84e+03	1.84e+03	2.11e+03	1.84e+03
ND-147	8.39e+06	8.39e+06	8.39e+06	8.39e+06	8.39e+06	8.39e+06	1.01e+07	8.39e+06
W-187	2.35e+06	2.35e+06	2.35e+06	2.35e+06	2.35e+06	2.35e+06	2.73e+06	2.35e+06
NP-239	1.71e+06	1.71e+06	1.71e+06	1.71e+06	1.71e+06	1.71e+06	1.98e+06	1.71e+06
PU-239	2.29e+06	2.29e+06	2.29e+06	2.29e+06	2.29e+06	2.29e+06	2.23e+07	2.29e+06
U-235	9.28e+09	9.28e+09	9.28e+09	9.28e+09	9.28e+09	9.28e+09	1.16e+10	9.28e+09

DOSE FACTORS: RADIONUCLIDES OTHER THAN NOBLE GASES
(Ref.3.9 Ch. 5.2, 5.3)

Units: Airborne
Pathways & Tritium Ingestion: (mrem/yr)/(µCi/m^3))
Deposition Pathways: (m^2 * (mrem/yr)/(µCi/sec)
AgeGroup: CHILD
Pathway: Inhalation (INHL)

Nuclide	Bone	Liver	Thyroid	Kidney	Lung	GI-Lli	Skin	TB
H-3	0.00e+00	1.13e+03	1.13e+03	1.13e+03	1.13e+03	1.13e+03	0.00e+00	1.13e+03
C-14	3.59e+04	6.73e+03	6.73e+03	6.73e+03	6.73e+03	6.73e+03	0.00e+00	6.73e+03
NA-24	1.61e+04	1.61e+04	1.61e+04	1.61e+04	1.61e+04	1.61e+04	0.00e+00	1.61e+04
P-32	1.15e+09	1.14e+05	0.00e+00	0.00e+00	0.00e+00	4.22e+04	0.00e+00	9.88e+04
CR-51	0.00e+00	0.00e+00	8.55e+01	2.43e+01	1.70e+04	1.08e+03	0.00e+00	1.54e+02
MN-54	0.00e+00	4.29e+04	0.00e+00	1.00e+04	1.58e+06	2.29e+04	0.00e+00	9.51e+03
MN-56	0.00e+00	1.66e+00	0.00e+00	1.67e+00	1.31e+04	1.23e+05	0.00e+00	3.12e-01
FE-55	4.74e+04	2.52e+04	0.00e+00	0.00e+00	1.11e+05	2.87e+03	0.00e+00	7.77e+03
FE-59	2.07e+04	3.35e+04	0.00e+00	0.00e+00	1.27e+06	7.07e+04	0.00e+00	1.67e+04
CO-58	0.00e+00	1.77e+03	0.00e+00	0.00e+00	1.11e+06	3.44e+04	0.00e+00	3.16e+03
CO-60	0.00e+00	1.31e+04	0.00e+00	0.00e+00	7.07e+06	9.62e+04	0.00e+00	2.26e+04
NI-63	8.21e+05	4.63e+04	0.00e+00	0.00e+00	2.75e+05	6.33e+03	0.00e+00	2.80e+04
NI-65	2.99e+00	2.96e-01	0.00e+00	0.00e+00	8.18e+03	8.40e+04	0.00e+00	1.64e-01
CU-64	0.00e+00	1.99e+00	0.00e+00	6.03e+00	9.58e+03	3.67e+04	0.00e+00	1.07e+00
ZN-65	4.26e+04	1.13e+05	0.00e+00	7.14e+04	9.95e+05	1.63e+04	0.00e+00	7.03e+04
ZN-69	6.70e-02	9.66e-02	0.00e+00	5.85e-02	1.42e+03	1.02e+04	0.00e+00	8.92e-03
BR-83	0.00e+00	0.00e+00	0.00e+00	0.00e+00	0.00e+00	0.00e+00	0.00e+00	4.74e+02
BR-84	0.00e+00	0.00e+00	0.00e+00	0.00e+00	0.00e+00	0.00e+00	0.00e+00	5.48e+02
BR-85	0.00e+00	0.00e+00	0.00e+00	0.00e+00	0.00e+00	0.00e+00	0.00e+00	2.53e+01
RB-86	0.00e+00	1.98e+05	0.00e+00	0.00e+00	0.00e+00	7.99e+03	0.00e+00	1.14e+05
RB-88	0.00e+00	5.62e+02	0.00e+00	0.00e+00	0.00e+00	1.72e+01	0.00e+00	3.66e+02
RB-89	0.00e+00	3.45e+02	0.00e+00	0.00e+00	0.00e+00	1.89e+00	0.00e+00	2.90e+02
SR-89	5.99e+05	0.00e+00	0.00e+00	0.00e+00	2.16e+06	1.67e+05	0.00e+00	1.72e+04
SR-90	1.01e+08	0.00e+00	0.00e+00	0.00e+00	1.48e+07	3.43e+05	0.00e+00	6.44e+06
SR-91	1.21e+02	0.00e+00	0.00e+00	0.00e+00	5.33e+04	1.74e+05	0.00e+00	4.59e+00
SR-92	1.31e+01	0.00e+00	0.00e+00	0.00e+00	2.40e+04	2.42e+05	0.00e+00	5.25e-01
Y-90	4.11e+03	0.00e+00	0.00e+00	0.00e+00	2.62e+05	2.68e+05	0.00e+00	1.11e+02
Y-91	9.14e+05	0.00e+00	0.00e+00	0.00e+00	2.63e+06	1.84e+05	0.00e+00	2.44e+04
Y-91M	5.07e-01	0.00e+00	0.00e+00	0.00e+00	2.81e+03	1.72e+03	0.00e+00	1.84e-02
Y-92	2.04e+01	0.00e+00	0.00e+00	0.00e+00	2.39e+04	2.39e+05	0.00e+00	5.81e-01
Y-93	1.87e+02	0.00e+00	0.00e+00	0.00e+00	7.44e+04	3.89e+05	0.00e+00	5.11e+00
ZR-95	1.90e+05	4.18e+04	0.00e+00	5.96e+04	2.23e+06	6.11e+04	0.00e+00	3.70e+04
ZR-97	1.88e+02	2.72e+01	0.00e+00	3.89e+01	1.13e+05	3.51e+05	0.00e+00	1.60e+01
NB-95	2.35e+04	9.18e+03	0.00e+00	8.62e+03	6.14e+05	3.70e+04	0.00e+00	6.55e+03
MO-99	0.00e+00	1.72e+02	0.00e+00	3.92e+02	1.35e+05	1.27e+05	0.00e+00	4.25e+01
TC-99M	1.78e-03	3.48e-03	0.00e+00	5.07e-02	9.51e+02	4.81e+03	0.00e+00	5.77e-02
TC-101	8.10e-05	8.51e-05	0.00e+00	1.45e-03	5.85e+02	1.63e+01	0.00e+00	1.08e-03
RU-103	2.79e+03	0.00e+00	0.00e+00	7.03e+03	6.62e+05	4.48e+04	0.00e+00	1.07e+03

DOSE FACTORS: RADIONUCLIDES OTHER THAN NOBLE GASES
(Ref.3.9 Ch. 5.2, 5.3)

Units: Airborne Pathways & Tritium Ingestion: (mrem/yr)/(µCi/m^3))
Deposition Pathways: (m^2 * (mrem/yr)/(µCi/sec)
AgeGroup: CHILD
Pathway: Inhalation (INHL)

Nuclide	Bone	Liver	Thyroid	Kidney	Lung	GI-Lli	Skin	TB
RU-105	1.53e+00	0.00e+00	0.00e+00	1.34e+00	1.59e+04	9.95e+04	0.00e+00	5.55e-01
RU-106	1.36e+05	0.00e+00	0.00e+00	1.84e+05	1.43e+07	4.29e+05	0.00e+00	1.69e+04
AG-110M	1.69e+04	1.14e+04	0.00e+00	2.12e+04	5.48e+06	1.00e+05	0.00e+00	9.14e+03
TE-125M	6.73e+03	2.33e+03	1.92e+03	0.00e+00	4.77e+05	3.38e+04	0.00e+00	9.14e+02
TE-127	2.77e+00	9.51e-01	1.96e+00	7.07e+00	1.00e+04	5.62e+04	0.00e+00	6.11e-01
TE-127M	2.49e+04	8.55e+03	6.07e+03	6.36e+04	1.48e+06	7.14e+04	0.00e+00	3.02e+03
TE-129	9.77e-02	3.50e-02	7.14e-02	2.57e-01	2.93e+03	2.55e+04	0.00e+00	2.38e-02
TE-129M	1.92e+04	6.85e+03	6.33e+03	5.03e+04	1.76e+06	1.82e+05	0.00e+00	3.04e+03
TE-131	2.17e-02	8.44e-03	1.70e-02	5.88e-02	2.05e+03	1.33e+03	0.00e+00	6.59e-03
TE-131M	1.34e+02	5.92e+01	9.77e+01	4.00e+02	2.06e+05	3.08e+05	0.00e+00	5.07e+01
TE-132	4.81e+02	2.72e+02	3.18e+02	1.77e+03	3.77e+05	1.38e+05	0.00e+00	2.63e+02
I-130	8.18e+03	1.64e+04	1.85e+06	2.45e+04	0.00e+00	5.11e+03	0.00e+00	8.44e+03
I-131	4.81e+04	4.81e+04	1.62e+07	7.88e+04	0.00e+00	2.84e+03	0.00e+00	2.73e+04
I-132	2.12e+03	4.07e+03	1.94e+05	6.25e+03	0.00e+00	3.20e+03	0.00e+00	1.88e+03
I-133	1.66e+04	2.03e+04	3.85e+06	3.38e+04	0.00e+00	5.48e+03	0.00e+00	7.70e+03
I-134	1.17e+03	2.16e+03	5.07e+04	3.30e+03	0.00e+00	9.55e+02	0.00e+00	9.95e+02
I-135	4.92e+03	8.73e+03	7.92e+05	1.34e+04	0.00e+00	4.44e+03	0.00e+00	4.14e+03
CS-134	6.51e+05	1.01e+06	0.00e+00	3.30e+05	1.21e+05	3.85e+03	0.00e+00	2.25e+05
CS-136	6.51e+04	1.71e+05	0.00e+00	9.55e+04	1.45e+04	4.18e+03	0.00e+00	1.16e+05
CS-137	9.07e+05	8.25e+05	0.00e+00	2.82e+05	1.04e+05	3.62e+03	0.00e+00	1.28e+05
CS-138	6.33e+02	8.40e+02	0.00e+00	6.22e+02	6.81e+01	2.70e+02	0.00e+00	5.55e+02
BA-139	1.84e+00	9.84e-04	0.00e+00	8.62e-04	5.77e+03	5.77e+04	0.00e+00	5.37e-02
BA-140	7.40e+04	6.48e+01	0.00e+00	2.11e+01	1.74e+06	1.02e+05	0.00e+00	4.33e+03
BA-141	1.96e-01	1.09e-04	0.00e+00	9.47e-05	2.92e+03	2.75e+02	0.00e+00	6.36e-03
BA-142	5.00e-02	3.60e-05	0.00e+00	2.91e-05	1.64e+03	2.74e+00	0.00e+00	2.79e-03
LA-140	6.44e+02	2.25e+02	0.00e+00	0.00e+00	1.83e+05	2.26e+05	0.00e+00	7.55e+01
LA-142	1.29e+00	4.11e-01	0.00e+00	0.00e+00	8.70e+03	7.59e+04	0.00e+00	1.29e-01
CE-141	3.92e+04	1.95e+04	0.00e+00	8.55e+03	5.44e+05	5.66e+04	0.00e+00	2.90e+03
CE-143	3.66e+02	1.99e+02	0.00e+00	8.36e+01	1.15e+05	1.27e+05	0.00e+00	2.88e+01
CE-144	6.77e+06	2.12e+06	0.00e+00	1.17e+06	1.20e+07	3.89e+05	0.00e+00	3.62e+05
PR-143	1.85e+04	5.55e+03	0.00e+00	3.00e+03	4.33e+05	9.73e+04	0.00e+00	9.14e+02
PR-144	5.96e-02	1.85e-02	0.00e+00	9.77e-03	1.57e+03	1.97e+02	0.00e+00	3.00e-03
ND-147	1.08e+04	8.73e+03	0.00e+00	4.81e+03	3.28e+05	8.21e+04	0.00e+00	6.81e+02
W-187	1.63e+01	9.66e+00	0.00e+00	0.00e+00	4.11e+04	9.10e+04	0.00e+00	4.33e+00
NP-239	4.66e+02	3.01e+02	0.00e+00	9.73e+01	5.81e+04	6.40e+04	0.00e+00	2.35e+01
PU-239	1.03e+10	6.22e+09	0.00e+00	1.77e+09	2.12e+09	1.57e+05	0.00e+00	4.74e+08
U-235	1.58e+08	0.00e+00	0.00e+00	2.59e+07	6.03e+08	1.84e+05	0.00e+00	9.58e+06

DOSE FACTORS: RADIONUCLIDES OTHER THAN NOBLE GASES
(Ref.3.9 Ch. 5.2, 5.3)

Units: Airborne Pathways & Tritium Ingestion: (mrem/yr)/(µCi/m^3))
Deposition Pathways: (m^2 * (mrem/yr)/(µCi/sec)
AgeGroup: CHILD
Pathway: Grs/Cow/Meat (CMEAT)

Nuclide	Bone	Liver	Thyroid	Kidney	Lung	GI-Lli	Skin	TB
H-3	0.00e+00	2.34e+02	2.34e+02	2.34e+02	2.34e+02	2.34e+02	0.00e+00	2.34e+02
C-14	3.83e+08	7.67e+07	7.67e+07	7.67e+07	7.67e+07	7.67e+07	0.00e+00	7.67e+07
NA-24	1.78e-03	1.78e-03	1.78e-03	1.78e-03	1.78e-03	1.78e-03	0.00e+00	1.78e-03
P-32	1.15e+09	3.48e+08	0.00e+00	0.00e+00	0.00e+00	2.05e+08	0.00e+00	2.86e+08
CR-51	0.00e+00	0.00e+00	4.88e+03	1.33e+03	8.91e+03	4.66e+05	0.00e+00	8.80e+03
MN-54	0.00e+00	8.01e+06	0.00e+00	2.25e+06	0.00e+00	6.72e+06	0.00e+00	2.13e+06
MN-56	0.00e+00	1.96e-53	0.00e+00	2.37e-53	0.00e+00	2.84e-51	0.00e+00	4.42e-54
FE-55	4.57e+08	2.43e+08	0.00e+00	0.00e+00	1.37e+08	4.49e+07	0.00e+00	7.51e+07
FE-59	3.77e+08	6.09e+08	0.00e+00	0.00e+00	1.77e+08	6.34e+08	0.00e+00	3.04e+08
CO-58	0.00e+00	1.64e+07	0.00e+00	0.00e+00	0.00e+00	9.58e+07	0.00e+00	5.03e+07
CO-60	0.00e+00	6.93e+07	0.00e+00	0.00e+00	0.00e+00	3.84e+08	0.00e+00	2.04e+08
NI-63	2.91e+10	1.56e+09	0.00e+00	0.00e+00	0.00e+00	1.05e+08	0.00e+00	9.91e+08
NI-65	4.22e-52	3.97e-53	0.00e+00	0.00e+00	0.00e+00	4.86e-51	0.00e+00	2.32e-53
CU-64	0.00e+00	3.08e-07	0.00e+00	7.45e-07	0.00e+00	1.45e-05	0.00e+00	1.86e-07
ZN-65	3.76e+08	1.00e+09	0.00e+00	6.30e+08	0.00e+00	1.76e+08	0.00e+00	6.22e+08
RB-86	0.00e+00	5.77e+08	0.00e+00	0.00e+00	0.00e+00	3.71e+07	0.00e+00	3.55e+08
SR-89	4.82e+08	0.00e+00	0.00e+00	0.00e+00	0.00e+00	1.87e+07	0.00e+00	1.38e+07
SR-90	1.04e+10	0.00e+00	0.00e+00	0.00e+00	0.00e+00	1.40e+08	0.00e+00	2.64e+09
SR-91	2.52e-10	0.00e+00	0.00e+00	0.00e+00	0.00e+00	5.55e-10	0.00e+00	9.49e-12
SR-92	2.18e-49	0.00e+00	0.00e+00	0.00e+00	0.00e+00	4.13e-48	0.00e+00	8.75e-51
Y-90	1.73e+02	0.00e+00	0.00e+00	0.00e+00	0.00e+00	4.92e+05	0.00e+00	4.62e+00
Y-91	1.80e+06	0.00e+00	0.00e+00	0.00e+00	0.00e+00	2.40e+08	0.00e+00	4.82e+04
Y-92	2.74e-39	0.00e+00	0.00e+00	0.00e+00	0.00e+00	7.92e-35	0.00e+00	7.84e-41
Y-93	7.78e-12	0.00e+00	0.00e+00	0.00e+00	0.00e+00	1.16e-07	0.00e+00	2.14e-13
ZR-95	2.66e+06	5.86e+05	0.00e+00	8.38e+05	0.00e+00	6.11e+08	0.00e+00	5.21e+05
ZR-97	3.29e-05	4.76e-06	0.00e+00	6.83e-06	0.00e+00	7.21e-01	0.00e+00	2.81e-06
NB-95	3.10e+06	1.21e+06	0.00e+00	1.13e+06	0.00e+00	2.23e+09	0.00e+00	8.62e+05
MO-99	0.00e+00	1.16e+05	0.00e+00	2.47e+05	0.00e+00	9.58e+04	0.00e+00	2.87e+04
TC-99M	6.69e-21	1.31e-20	0.00e+00	1.90e-19	6.66e-21	7.46e-18	0.00e+00	2.17e-19
RU-103	1.55e+08	0.00e+00	0.00e+00	3.90e+08	0.00e+00	4.01e+09	0.00e+00	5.96e+07
RU-105	9.99e-28	0.00e+00	0.00e+00	8.78e-27	0.00e+00	6.52e-25	0.00e+00	3.63e-28
RU-106	4.44e+09	0.00e+00	0.00e+00	5.99e+09	0.00e+00	6.90e+10	0.00e+00	5.54e+08
AG-110M	8.39e+06	5.67e+06	0.00e+00	1.06e+07	0.00e+00	6.74e+08	0.00e+00	4.53e+06
TE-125M	5.69e+08	1.54e+08	1.60e+08	0.00e+00	0.00e+00	5.49e+08	0.00e+00	7.59e+07
TE-127	3.56e-10	9.59e-11	2.46e-10	1.01e-09	0.00e+00	1.39e-08	0.00e+00	7.63e-11
TE-127M	1.78e+09	4.78e+08	4.24e+08	5.06e+09	0.00e+00	1.44e+09	0.00e+00	2.11e+08
TE-129M	1.79e+09	5.00e+08	5.78e+08	5.26e+09	0.00e+00	2.19e+09	0.00e+00	2.78e+08
TE-131M	7.11e+02	2.46e+02	5.05e+02	2.38e+03	0.00e+00	9.97e+03	0.00e+00	2.62e+02

DOSE FACTORS: RADIONUCLIDES OTHER THAN NOBLE GASES
(Ref.3.9 Ch. 5.2, 5.3)

Units: Airborne Pathways & Tritium Ingestion: (mrem/yr)/(µCi/m^3))
Deposition Pathways: (m^2 * (mrem/yr)/(µCi/sec)
AgeGroup: CHILD
Pathway: Grs/Cow/Meat (CMEAT)

Nuclide	Bone	Liver	Thyroid	Kidney	Lung	GI-Lli	Skin	TB
TE-132	2.13e+06	9.44e+05	1.38e+06	8.77e+06	0.00e+00	9.50e+06	0.00e+00	1.14e+06
I-130	1.58e-06	3.18e-06	3.51e-04	4.76e-06	0.00e+00	1.49e-06	0.00e+00	1.64e-06
I-131	8.30e+06	8.34e+06	2.76e+09	1.37e+07	0.00e+00	7.43e+05	0.00e+00	4.74e+06
I-132	6.24e-59	1.15e-58	5.32e-57	1.75e-58	0.00e+00	1.35e-58	0.00e+00	5.27e-59
I-133	2.90e-01	3.59e-01	6.66e+01	5.98e-01	0.00e+00	1.45e-01	0.00e+00	1.36e-01
I-135	3.49e-17	6.29e-17	5.57e-15	9.64e-17	0.00e+00	4.79e-17	0.00e+00	2.97e-17
CS-134	9.22e+08	1.51e+09	0.00e+00	4.69e+08	1.68e+08	8.16e+06	0.00e+00	3.19e+08
CS-136	1.62e+07	4.47e+07	0.00e+00	2.38e+07	3.55e+06	1.57e+06	0.00e+00	2.89e+07
CS-137	1.33e+09	1.28e+09	0.00e+00	4.16e+08	1.50e+08	7.99e+06	0.00e+00	1.88e+08
BA-140	4.39e+07	3.85e+04	0.00e+00	1.25e+04	2.29e+04	2.22e+07	0.00e+00	2.56e+06
LA-140	5.65e-02	1.98e-02	0.00e+00	0.00e+00	0.00e+00	5.51e+02	0.00e+00	6.66e-03
LA-142	7.00e-92	2.23e-92	0.00e+00	0.00e+00	0.00e+00	4.42e-87	0.00e+00	6.99e-93
CE-141	2.22e+04	1.11e+04	0.00e+00	4.86e+03	0.00e+00	1.38e+07	0.00e+00	1.65e+03
CE-143	3.21e-02	1.74e+01	0.00e+00	7.31e-03	0.00e+00	2.55e+02	0.00e+00	2.52e-03
CE-144	2.32e+06	7.26e+05	0.00e+00	4.02e+05	0.00e+00	1.89e+08	0.00e+00	1.24e+05
PR-143	3.34e+04	1.00e+04	0.00e+00	5.44e+03	0.00e+00	3.61e+07	0.00e+00	1.66e+03
ND-147	1.17e+04	9.48e+03	0.00e+00	5.20e+03	0.00e+00	1.50e+07	0.00e+00	7.34e+02
W-187	3.27e-02	1.94e-02	0.00e+00	0.00e+00	0.00e+00	2.72e+00	0.00e+00	8.69e-03
NP-239	4.30e-01	3.08e-02	0.00e+00	8.92e-02	0.00e+00	2.28e+03	0.00e+00	2.17e-02
PU-239	1.85e+07	1.98e+06	0.00e+00	1.75e+06	0.00e+00	9.80e+05	0.00e+00	4.74e+05
U-235	1.19e+09	0.00e+00	0.00e+00	1.95e+08	0.00e+00	2.79e+07	0.00e+00	7.19e+07

DOSE FACTORS: RADIONUCLIDES OTHER THAN NOBLE GASES
(Ref.3.9 Ch. 5.2, 5.3)

Units: Airborne Pathways & Tritium Ingestion: (mrem/yr)/(µCi/m^3))
Deposition Pathways: (m^2 * (mrem/yr)/(µCi/sec)
AgeGroup: CHILD
Pathway: Grs/Cow/Milk (CMILK)

Nuclide	Bone	Liver	Thyroid	Kidney	Lung	GI-Lli	Skin	TB
H-3	0.00e+00	1.57e+03	1.57e+03	1.57e+03	1.57e+03	1.57e+03	0.00e+00	1.57e+03
C-14	1.20e+09	2.39e+08	2.39e+08	2.39e+08	2.39e+08	2.39e+08	0.00e+00	2.39e+08
NA-24	8.88e+06	8.88e+06	8.88e+06	8.88e+06	8.88e+06	8.88e+06	0.00e+00	8.88e+06
P-32	1.21e+10	3.64e+09	0.00e+00	0.00e+00	0.00e+00	2.15e+09	0.00e+00	3.00e+09
CR-51	0.00e+00	0.00e+00	5.65e+04	1.54e+04	1.03e+05	5.40e+06	0.00e+00	1.02e+05
MN-54	0.00e+00	2.10e+07	0.00e+00	5.88e+06	0.00e+00	1.76e+07	0.00e+00	5.59e+06
MN-56	0.00e+00	1.31e-02	0.00e+00	1.58e-02	0.00e+00	1.89e+00	0.00e+00	2.95e-03
FE-55	1.12e+08	5.93e+07	0.00e+00	0.00e+00	3.35e+07	1.10e+07	0.00e+00	1.84e+07
FE-59	1.20e+08	1.95e+08	0.00e+00	0.00e+00	5.64e+07	2.03e+08	0.00e+00	9.69e+07
CO-58	0.00e+00	1.21e+07	0.00e+00	0.00e+00	0.00e+00	7.07e+07	0.00e+00	3.71e+07
CO-60	0.00e+00	4.32e+07	0.00e+00	0.00e+00	0.00e+00	2.39e+08	0.00e+00	1.27e+08
NI-63	2.97e+10	1.59e+09	0.00e+00	0.00e+00	0.00e+00	1.07e+08	0.00e+00	1.01e+09
NI-65	1.69e+00	1.59e-01	0.00e+00	0.00e+00	0.00e+00	1.94e+01	0.00e+00	9.27e-02
CU-64	0.00e+00	7.49e+04	0.00e+00	1.81e+05	0.00e+00	3.52e+06	0.00e+00	4.53e+04
ZN-65	4.13e+09	1.10e+10	0.00e+00	6.94e+09	0.00e+00	1.93e+09	0.00e+00	6.85e+09
ZN-69	9.95e-12	1.44e-11	0.00e+00	8.72e-12	0.00e+00	9.06e-10	0.00e+00	1.33e-12
BR-83	0.00e+00	0.00e+00	0.00e+00	0.00e+00	0.00e+00	0.00e+00	0.00e+00	4.49e-01
BR-84	0.00e+00	0.00e+00	0.00e+00	0.00e+00	0.00e+00	0.00e+00	0.00e+00	7.09e-23
RB-86	0.00e+00	8.77e+09	0.00e+00	0.00e+00	0.00e+00	5.64e+08	0.00e+00	5.39e+09
RB-88	0.00e+00	8.34e-45	0.00e+00	0.00e+00	0.00e+00	4.09e-46	0.00e+00	5.79e-45
RB-89	0.00e+00	2.05e-53	0.00e+00	0.00e+00	0.00e+00	1.79e-55	0.00e+00	1.83e-53
SR-89	6.62e+09	0.00e+00	0.00e+00	0.00e+00	0.00e+00	2.56e+08	0.00e+00	1.89e+08
SR-90	1.12e+11	0.00e+00	0.00e+00	0.00e+00	0.00e+00	1.51e+09	0.00e+00	2.83e+10
SR-91	1.31e+05	0.00e+00	0.00e+00	0.00e+00	0.00e+00	2.89e+05	0.00e+00	4.95e+03
SR-92	2.22e+00	0.00e+00	0.00e+00	0.00e+00	0.00e+00	4.20e+01	0.00e+00	8.90e-02
Y-90	3.23e+02	0.00e+00	0.00e+00	0.00e+00	0.00e+00	9.18e+05	0.00e+00	8.63e+00
Y-91	3.90e+04	0.00e+00	0.00e+00	0.00e+00	0.00e+00	5.20e+06	0.00e+00	1.04e+03
Y-91M	2.83e-19	0.00e+00	0.00e+00	0.00e+00	0.00e+00	5.54e-16	0.00e+00	1.03e-20
Y-92	2.56e-04	0.00e+00	0.00e+00	0.00e+00	0.00e+00	7.41e+00	0.00e+00	7.34e-06
Y-93	1.02e+00	0.00e+00	0.00e+00	0.00e+00	0.00e+00	1.52e+04	0.00e+00	2.79e-02
ZR-95	3.83e+03	8.42e+02	0.00e+00	1.21e+03	0.00e+00	8.79e+05	0.00e+00	7.50e+02
ZR-97	1.92e+00	2.78e-01	0.00e+00	3.99e-01	0.00e+00	4.21e+04	0.00e+00	1.64e-01
NB-95	3.18e+05	1.24e+05	0.00e+00	1.16e+05	0.00e+00	2.29e+08	0.00e+00	8.85e+04
MO-99	0.00e+00	8.14e+07	0.00e+00	1.74e+08	0.00e+00	6.74e+07	0.00e+00	2.02e+07
TC-99M	1.33e+01	2.61e+01	0.00e+00	3.79e+02	1.33e+01	1.49e+04	0.00e+00	4.33e+02
TC-101	1.41e-59	1.48e-59	0.00e+00	2.52e-58	7.80e-60	4.69e-59	0.00e+00	1.87e-58
RU-103	4.28e+03	0.00e+00	0.00e+00	1.08e+04	0.00e+00	1.11e+05	0.00e+00	1.65e+03
RU-105	3.86e-03	0.00e+00	0.00e+00	3.39e-02	0.00e+00	2.52e+00	0.00e+00	1.40e-03

DOSE FACTORS: RADIONUCLIDES OTHER THAN NOBLE GASES
(Ref.3.9 Ch. 5.2, 5.3)

Units: Airborne Pathways & Tritium Ingestion: (mrem/yr)/(µCi/m^3))
Deposition Pathways: (m^2 * (mrem/yr)/(µCi/sec)
AgeGroup: CHILD
Pathway: Grs/Cow/Milk (CMILK)

Nuclide	Bone	Liver	Thyroid	Kidney	Lung	GI-Lli	Skin	TB
RU-106	9.24e+04	0.00e+00	0.00e+00	1.25e+05	0.00e+00	1.44e+06	0.00e+00	1.15e+04
AG-110M	2.09e+08	1.41e+08	0.00e+00	2.63e+08	0.00e+00	1.68e+10	0.00e+00	1.13e+08
TE-125M	7.38e+07	2.00e+07	2.07e+07	0.00e+00	0.00e+00	7.12e+07	0.00e+00	9.84e+06
TE-127	2.99e+03	8.07e+02	2.07e+03	8.51e+03	0.00e+00	1.17e+05	0.00e+00	6.41e+02
TE-127M	2.08e+08	5.60e+07	4.97e+07	5.93e+08	0.00e+00	1.69e+08	0.00e+00	2.47e+07
TE-129	1.33e-09	3.72e-10	9.52e-10	3.90e-09	0.00e+00	8.31e-08	0.00e+00	3.17e-10
TE-129M	2.71e+08	7.58e+07	8.75e+07	7.97e+08	0.00e+00	3.31e+08	0.00e+00	4.21e+07
TE-131	1.80e-32	5.50e-33	1.38e-32	5.45e-32	0.00e+00	9.47e-32	0.00e+00	5.37e-33
TE-131M	1.60e+06	5.54e+05	1.14e+06	5.36e+06	0.00e+00	2.25e+07	0.00e+00	5.90e+05
TE-132	1.03e+07	4.54e+06	6.61e+06	4.21e+07	0.00e+00	4.57e+07	0.00e+00	5.48e+06
I-130	8.67e+05	1.75e+06	1.93e+08	2.62e+06	0.00e+00	8.19e+05	0.00e+00	9.03e+05
I-131	6.52e+08	6.56e+08	2.17e+11	1.08e+09	0.00e+00	5.84e+07	0.00e+00	3.73e+08
I-132	3.51e-01	6.46e-01	3.00e+01	9.89e-01	0.00e+00	7.60e-01	0.00e+00	2.97e-01
I-133	8.61e+06	1.06e+07	1.98e+09	1.77e+07	0.00e+00	4.29e+06	0.00e+00	4.03e+06
I-134	4.47e-12	8.30e-12	1.91e-10	1.27e-11	0.00e+00	5.50e-12	0.00e+00	3.82e-12
I-135	2.72e+04	4.89e+04	4.33e+06	7.50e+04	0.00e+00	3.73e+04	0.00e+00	2.32e+04
CS-134	2.26e+10	3.72e+10	0.00e+00	1.15e+10	4.13e+09	2.00e+08	0.00e+00	7.84e+09
CS-136	1.01e+09	2.78e+09	0.00e+00	1.48e+09	2.21e+08	9.77e+07	0.00e+00	1.80e+09
CS-137	3.22e+10	3.09e+10	0.00e+00	1.01e+10	3.62e+09	1.93e+08	0.00e+00	4.56e+09
CS-138	4.33e-23	6.02e-23	0.00e+00	4.23e-23	4.56e-24	2.77e-23	0.00e+00	3.82e-23
BA-139	2.08e-07	1.11e-10	0.00e+00	9.68e-11	6.52e-11	1.20e-05	0.00e+00	6.02e-09
BA-140	1.17e+08	1.03e+05	0.00e+00	3.34e+04	6.12e+04	5.94e+07	0.00e+00	6.84e+06
BA-141	2.15e-45	1.20e-48	0.00e+00	1.04e-48	7.07e-48	1.22e-45	0.00e+00	7.00e-47
BA-142	1.50e-79	1.08e-82	0.00e+00	8.73e-83	6.35e-83	1.96e-81	0.00e+00	8.37e-81
LA-140	1.94e+01	6.79e+00	0.00e+00	0.00e+00	0.00e+00	1.89e+05	0.00e+00	2.29e+00
LA-142	8.33e-11	2.66e-11	0.00e+00	0.00e+00	0.00e+00	5.27e-06	0.00e+00	8.32e-12
CE-141	2.19e+04	1.09e+04	0.00e+00	4.78e+03	0.00e+00	1.36e+07	0.00e+00	1.62e+03
CE-143	1.88e+02	1.02e+05	0.00e+00	4.27e+01	0.00e+00	1.49e+06	0.00e+00	1.47e+01
CE-144	1.62e+06	5.09e+05	0.00e+00	2.82e+05	0.00e+00	1.33e+08	0.00e+00	8.66e+04
PR-143	7.18e+02	2.16e+02	0.00e+00	1.17e+02	0.00e+00	7.75e+05	0.00e+00	3.56e+01
PR-144	3.14e-53	9.70e-54	0.00e+00	5.13e-54	0.00e+00	2.09e-50	0.00e+00	1.58e-54
ND-147	4.45e+02	3.60e+02	0.00e+00	1.98e+02	0.00e+00	5.71e+05	0.00e+00	2.79e+01
W-187	2.89e+04	1.71e+04	0.00e+00	0.00e+00	0.00e+00	2.41e+06	0.00e+00	7.69e+03
NP-239	1.73e+01	1.24e+00	0.00e+00	3.59e+00	0.00e+00	9.18e+04	0.00e+00	8.72e-01
PU-239	5.31e+07	5.68e+06	0.00e+00	5.02e+06	0.00e+00	2.82e+06	0.00e+00	1.36e+06
U-235	1.41e+10	0.00e+00	0.00e+00	2.31e+09	0.00e+00	3.30e+08	0.00e+00	8.52e+08

DOSE FACTORS: RADIONUCLIDES OTHER THAN NOBLE GASES
(Ref.3.9 Ch. 5.2, 5.3)

Units: Airborne Pathways & Tritium Ingestion: (mrem/yr)/(µCi/m^3))
Deposition Pathways: (m^2 * (mrem/yr)/(µCi/sec)
AgeGroup: CHILD
Pathway: Vegetation (VEG)

Nuclide	Bone	Liver	Thyroid	Kidney	Lung	GI-Lli	Skin	TB
H-3	0.00e+00	4.01e+03	4.01e+03	4.01e+03	4.01e+03	4.01e+03	0.00e+00	4.01e+03
C-14	8.89e+08	1.78e+08	1.78e+08	1.78e+08	1.78e+08	1.78e+08	0.00e+00	1.78e+08
NA-24	3.71e+05	3.71e+05	3.71e+05	3.71e+05	3.71e+05	3.71e+05	0.00e+00	3.71e+05
P-32	5.23e+08	1.58e+08	0.00e+00	0.00e+00	0.00e+00	9.31e+07	0.00e+00	1.30e+08
CR-51	0.00e+00	0.00e+00	6.50e+04	1.78e+04	1.19e+05	6.21e+06	0.00e+00	1.17e+05
MN-54	0.00e+00	6.65e+08	0.00e+00	1.86e+08	0.00e+00	5.58e+08	0.00e+00	1.77e+08
MN-56	0.00e+00	1.82e+01	0.00e+00	2.21e+01	0.00e+00	2.64e+03	0.00e+00	4.12e+00
FE-55	8.01e+08	4.25e+08	0.00e+00	0.00e+00	2.40e+08	7.87e+07	0.00e+00	1.32e+08
FE-59	3.97e+08	6.43e+08	0.00e+00	0.00e+00	1.86e+08	6.70e+08	0.00e+00	3.20e+08
CO-58	0.00e+00	6.44e+07	0.00e+00	0.00e+00	0.00e+00	3.76e+08	0.00e+00	1.97e+08
CO-60	0.00e+00	3.78e+08	0.00e+00	0.00e+00	0.00e+00	2.10e+09	0.00e+00	1.12e+09
NI-63	3.95e+10	2.12e+09	0.00e+00	0.00e+00	0.00e+00	1.43e+08	0.00e+00	1.35e+09
NI-65	1.02e+02	9.61e+00	0.00e+00	0.00e+00	0.00e+00	1.18e+03	0.00e+00	5.61e+00
CU-64	0.00e+00	1.09e+04	0.00e+00	2.64e+04	0.00e+00	5.13e+05	0.00e+00	6.60e+03
ZN-65	8.13e+08	2.17e+09	0.00e+00	1.36e+09	0.00e+00	3.80e+08	0.00e+00	1.35e+09
ZN-69	8.77e-06	1.27e-05	0.00e+00	7.69e-06	0.00e+00	7.99e-04	0.00e+00	1.17e-06
BR-83	0.00e+00	0.00e+00	0.00e+00	0.00e+00	0.00e+00	0.00e+00	0.00e+00	5.21e+00
BR-84	0.00e+00	0.00e+00	0.00e+00	0.00e+00	0.00e+00	0.00e+00	0.00e+00	3.33e-11
RB-86	0.00e+00	4.52e+08	0.00e+00	0.00e+00	0.00e+00	2.91e+07	0.00e+00	2.78e+08
RB-88	0.00e+00	3.41e-22	0.00e+00	0.00e+00	0.00e+00	1.67e-23	0.00e+00	2.37e-22
RB-89	0.00e+00	1.23e-26	0.00e+00	0.00e+00	0.00e+00	1.07e-28	0.00e+00	1.09e-26
SR-89	3.60e+10	0.00e+00	0.00e+00	0.00e+00	0.00e+00	1.39e+09	0.00e+00	1.03e+09
SR-90	1.24e+12	0.00e+00	0.00e+00	0.00e+00	0.00e+00	1.68e+10	0.00e+00	3.15e+11
SR-91	5.20e+05	0.00e+00	0.00e+00	0.00e+00	0.00e+00	1.15e+06	0.00e+00	1.96e+04
SR-92	7.09e+02	0.00e+00	0.00e+00	0.00e+00	0.00e+00	1.34e+04	0.00e+00	2.84e+01
Y-90	2.31e+04	0.00e+00	0.00e+00	0.00e+00	0.00e+00	6.56e+07	0.00e+00	6.17e+02
Y-91	1.86e+07	0.00e+00	0.00e+00	0.00e+00	0.00e+00	2.48e+09	0.00e+00	4.99e+05
Y-91M	8.15e-09	0.00e+00	0.00e+00	0.00e+00	0.00e+00	1.60e-05	0.00e+00	2.97e-10
Y-92	1.55e+00	0.00e+00	0.00e+00	0.00e+00	0.00e+00	4.48e+04	0.00e+00	4.44e-02
Y-93	2.91e+02	0.00e+00	0.00e+00	0.00e+00	0.00e+00	4.34e+06	0.00e+00	7.99e+00
ZR-95	3.86e+06	8.48e+05	0.00e+00	1.21e+06	0.00e+00	8.84e+08	0.00e+00	7.55e+05
ZR-97	5.68e+02	8.20e+01	0.00e+00	1.18e+02	0.00e+00	1.24e+07	0.00e+00	4.84e+01
NB-95	4.10e+05	1.60e+05	0.00e+00	1.50e+05	0.00e+00	2.95e+08	0.00e+00	1.14e+05
MO-99	0.00e+00	7.70e+06	0.00e+00	1.65e+07	0.00e+00	6.37e+06	0.00e+00	1.91e+06
TC-99M	4.65e+00	9.13e+00	0.00e+00	1.33e+02	4.63e+00	5.19e+03	0.00e+00	1.51e+02
TC-101	1.03e-30	1.08e-30	0.00e+00	1.84e-29	5.70e-31	3.43e-30	0.00e+00	1.37e-29
RU-103	1.53e+07	0.00e+00	0.00e+00	3.86e+07	0.00e+00	3.96e+08	0.00e+00	5.89e+06
RU-105	9.01e+01	0.00e+00	0.00e+00	7.92e+02	0.00e+00	5.88e+04	0.00e+00	3.27e+01

DOSE FACTORS: RADIONUCLIDES OTHER THAN NOBLE GASES
(Ref.3.9 Ch. 5.2, 5.3)

Units: Airborne Pathways & Tritium Ingestion: (mrem/yr)/(µCi/m^3))
Deposition Pathways: (m^2 * (mrem/yr)/(µCi/sec)
AgeGroup: CHILD
Pathway: Vegetation (VEG)

Nuclide	Bone	Liver	Thyroid	Kidney	Lung	GI-Lli	Skin	TB
RU-106	7.45e+08	0.00e+00	0.00e+00	1.01e+09	0.00e+00	1.16e+10	0.00e+00	9.30e+07
AG-110M	3.21e+07	2.17e+07	0.00e+00	4.04e+07	0.00e+00	2.58e+09	0.00e+00	1.73e+07
TE-125M	3.50e+08	9.50e+07	9.84e+07	0.00e+00	0.00e+00	3.38e+08	0.00e+00	4.67e+07
TE-127	9.77e+03	2.64e+03	6.76e+03	2.78e+04	0.00e+00	3.82e+05	0.00e+00	2.10e+03
TE-127M	1.32e+09	3.56e+08	3.16e+08	3.77e+09	0.00e+00	1.07e+09	0.00e+00	1.57e+08
TE-129	1.24e-03	3.46e-04	8.85e-04	3.63e-03	0.00e+00	7.72e-02	0.00e+00	2.95e-04
TE-129M	8.41e+08	2.35e+08	2.71e+08	2.47e+09	0.00e+00	1.03e+09	0.00e+00	1.31e+08
TE-131	2.15e-15	6.57e-16	1.65e-15	6.51e-15	0.00e+00	1.13e-14	0.00e+00	6.41e-16
TE-131M	1.54e+06	5.32e+05	1.09e+06	5.15e+06	0.00e+00	2.16e+07	0.00e+00	5.66e+05
TE-132	7.00e+06	3.10e+06	4.51e+06	2.88e+07	0.00e+00	3.12e+07	0.00e+00	3.74e+06
I-130	3.06e+05	6.18e+05	6.81e+07	9.24e+05	0.00e+00	2.89e+05	0.00e+00	3.19e+05
I-131	7.14e+07	7.19e+07	2.38e+10	1.18e+08	0.00e+00	6.40e+06	0.00e+00	4.08e+07
I-132	4.46e+01	8.20e+01	3.81e+03	1.26e+02	0.00e+00	9.66e+01	0.00e+00	3.77e+01
I-133	1.76e+06	2.18e+06	4.04e+08	3.63e+06	0.00e+00	8.77e+05	0.00e+00	8.24e+05
I-134	7.13e-05	1.32e-04	3.05e-03	2.02e-04	0.00e+00	8.78e-05	0.00e+00	6.09e-05
I-135	3.09e+04	5.57e+04	4.93e+06	8.54e+04	0.00e+00	4.24e+04	0.00e+00	2.63e+04
CS-134	1.60e+10	2.63e+10	0.00e+00	8.15e+09	2.93e+09	1.42e+08	0.00e+00	5.55e+09
CS-136	8.24e+07	2.26e+08	0.00e+00	1.21e+08	1.80e+07	7.96e+06	0.00e+00	1.47e+08
CS-137	2.39e+10	2.29e+10	0.00e+00	7.46e+09	2.69e+09	1.43e+08	0.00e+00	3.38e+09
CS-138	5.73e-11	7.97e-11	0.00e+00	5.60e-11	6.03e-12	3.67e-11	0.00e+00	5.05e-11
BA-139	4.70e-02	2.51e-05	0.00e+00	2.19e-05	1.47e-05	2.71e+00	0.00e+00	1.36e-03
BA-140	2.77e+08	2.42e+05	0.00e+00	7.89e+04	1.44e+05	1.40e+08	0.00e+00	1.61e+07
BA-141	1.56e-21	8.74e-25	0.00e+00	7.56e-25	5.14e-24	8.90e-22	0.00e+00	5.08e-23
BA-142	6.60e-39	4.75e-42	0.00e+00	3.84e-42	2.79e-42	8.60e-41	0.00e+00	3.68e-40
LA-140	3.24e+03	1.13e+03	0.00e+00	0.00e+00	0.00e+00	3.16e+07	0.00e+00	3.82e+02
LA-142	3.21e-04	1.02e-04	0.00e+00	0.00e+00	0.00e+00	2.03e+01	0.00e+00	3.20e-05
CE-141	6.56e+05	3.27e+05	0.00e+00	1.43e+05	0.00e+00	4.08e+08	0.00e+00	4.86e+04
CE-143	1.71e+03	9.29e+05	0.00e+00	3.90e+02	0.00e+00	1.36e+07	0.00e+00	1.35e+02
CE-144	1.27e+08	3.98e+07	0.00e+00	2.21e+07	0.00e+00	1.04e+10	0.00e+00	6.78e+06
PR-143	1.46e+05	4.37e+04	0.00e+00	2.37e+04	0.00e+00	1.57e+08	0.00e+00	7.22e+03
PR-144	4.17e-26	1.29e-26	0.00e+00	6.81e-27	0.00e+00	2.77e-23	0.00e+00	2.10e-27
ND-147	7.14e+04	5.79e+04	0.00e+00	3.17e+04	0.00e+00	9.16e+07	0.00e+00	4.48e+03
W-187	6.42e+04	3.80e+04	0.00e+00	0.00e+00	0.00e+00	5.34e+06	0.00e+00	1.71e+04
NP-239	2.56e+03	1.84e+02	0.00e+00	5.31e+02	0.00e+00	1.36e+07	0.00e+00	1.29e+02
PU-239	9.48e+10	1.01e+10	0.00e+00	8.97e+09	0.00e+00	5.04e+09	0.00e+00	2.43e+09
U-235	2.51e+11	0.00e+00	0.00e+00	4.12e+10	0.00e+00	5.90e+09	0.00e+00	1.52e+10

DOSE FACTORS: RADIONUCLIDES OTHER THAN NOBLE GASES
(Ref.3.9 Ch. 5.2, 5.3)

Units: Airborne Pathways & Tritium Ingestion: (mrem/yr)/(uCi/m^3))
Deposition Pathways: (m^2 * (mrem/yr)/(uCi/sec)
AgeGroup: INFANT
Pathway: Grs/Goat/Milk (GMILK)

Nuclide	Bone	Liver	Thyroid	Kidney	Lung	GI-Lli	Skin	TB
H-3	0.00e+00	4.86e+03	4.86e+03	4.86e+03	4.86e+03	4.86e+03	0.00e+00	4.86e+03
C-14	2.34e+09	5.00e+08	5.00e+08	5.00e+08	5.00e+08	5.00e+08	0.00e+00	5.00e+08
NA-24	1.86e+06	1.86e+06	1.86e+06	1.86e+06	1.86e+06	1.86e+06	0.00e+00	1.86e+06
P-32	1.92e+11	1.13e+10	0.00e+00	0.00e+00	0.00e+00	2.60e+09	0.00e+00	7.46e+09
CR-51	0.00e+00	0.00e+00	1.26e+04	2.76e+03	2.46e+04	5.64e+05	0.00e+00	1.94e+04
MN-54	0.00e+00	4.68e+06	0.00e+00	1.04e+06	0.00e+00	1.72e+06	0.00e+00	1.06e+06
MN-56	0.00e+00	3.84e-03	0.00e+00	3.30e-03	0.00e+00	3.49e-01	0.00e+00	6.62e-04
FE-55	1.76e+06	1.14e+06	0.00e+00	0.00e+00	5.55e+05	1.44e+05	0.00e+00	3.03e+05
FE-59	2.92e+06	5.10e+06	0.00e+00	0.00e+00	1.51e+06	2.43e+06	0.00e+00	2.01e+06
CO-58	0.00e+00	2.91e+06	0.00e+00	0.00e+00	0.00e+00	7.25e+06	0.00e+00	7.26e+06
CO-60	0.00e+00	1.06e+07	0.00e+00	0.00e+00	0.00e+00	2.52e+07	0.00e+00	2.50e+07
NI-63	4.19e+09	2.59e+08	0.00e+00	0.00e+00	0.00e+00	1.29e+07	0.00e+00	1.46e+08
NI-65	4.28e-01	4.85e-02	0.00e+00	0.00e+00	0.00e+00	3.69e+00	0.00e+00	2.21e-02
CU-64	0.00e+00	2.08e+04	0.00e+00	3.51e+04	0.00e+00	4.26e+05	0.00e+00	9.61e+03
ZN-65	6.66e+08	2.29e+09	0.00e+00	1.11e+09	0.00e+00	1.93e+09	0.00e+00	1.05e+09
ZN-69	2.54e-12	4.58e-12	0.00e+00	1.90e-12	0.00e+00	3.73e-10	0.00e+00	3.41e-13
BR-83	0.00e+00	0.00e+00	0.00e+00	0.00e+00	0.00e+00	0.00e+00	0.00e+00	1.14e-01
BR-84	0.00e+00	0.00e+00	0.00e+00	0.00e+00	0.00e+00	0.00e+00	0.00e+00	1.64e-23
RB-86	0.00e+00	2.67e+09	0.00e+00	0.00e+00	0.00e+00	6.84e+07	0.00e+00	1.32e+09
RB-88	0.00e+00	2.62e-45	0.00e+00	0.00e+00	0.00e+00	2.55e-45	0.00e+00	1.44e-45
RB-89	0.00e+00	6.02e-54	0.00e+00	0.00e+00	0.00e+00	2.05e-54	0.00e+00	4.15e-54
SR-89	2.64e+10	0.00e+00	0.00e+00	0.00e+00	0.00e+00	5.43e+08	0.00e+00	7.58e+08
SR-90	2.55e+11	0.00e+00	0.00e+00	0.00e+00	0.00e+00	3.19e+09	0.00e+00	6.50e+10
SR-91	5.73e+05	0.00e+00	0.00e+00	0.00e+00	0.00e+00	6.79e+05	0.00e+00	2.08e+04
SR-92	9.91e+00	0.00e+00	0.00e+00	0.00e+00	0.00e+00	1.07e+02	0.00e+00	3.68e-01
Y-90	8.18e+01	0.00e+00	0.00e+00	0.00e+00	0.00e+00	1.13e+05	0.00e+00	2.19e+00
Y-91	8.79e+03	0.00e+00	0.00e+00	0.00e+00	0.00e+00	6.30e+05	0.00e+00	2.34e+02
Y-91M	7.20e-20	0.00e+00	0.00e+00	0.00e+00	0.00e+00	2.40e-16	0.00e+00	2.45e-21
Y-92	6.54e-05	0.00e+00	0.00e+00	0.00e+00	0.00e+00	1.25e+00	0.00e+00	1.84e-06
Y-93	2.60e-01	0.00e+00	0.00e+00	0.00e+00	0.00e+00	2.05e+03	0.00e+00	7.08e-03
ZR-95	8.17e+02	1.99e+02	0.00e+00	2.15e+02	0.00e+00	9.91e+04	0.00e+00	1.41e+02
ZR-97	4.89e-01	8.39e-02	0.00e+00	8.46e-02	0.00e+00	5.35e+03	0.00e+00	3.83e-02
NB-95	7.12e+04	2.93e+04	0.00e+00	2.10e+04	0.00e+00	2.48e+07	0.00e+00	1.70e+04
MO-99	0.00e+00	2.50e+07	0.00e+00	3.73e+07	0.00e+00	8.23e+06	0.00e+00	4.87e+06
TC-99M	3.32e+00	6.85e+00	0.00e+00	7.37e+01	3.58e+00	1.99e+03	0.00e+00	8.83e+01
TC-101	3.59e-60	4.52e-60	0.00e+00	5.37e-59	2.47e-60	7.68e-58	0.00e+00	4.47e-59
RU-103	1.04e+03	0.00e+00	0.00e+00	2.17e+03	0.00e+00	1.27e+04	0.00e+00	3.48e+02
RU-105	9.77e-04	0.00e+00	0.00e+00	7.18e-03	0.00e+00	3.89e-01	0.00e+00	3.29e-04

DOSE FACTORS: RADIONUCLIDES OTHER THAN NOBLE GASES
(Ref.3.9 Ch. 5.2, 5.3)

Units: Airborne Pathways & Tritium Ingestion: (mrem/yr)/(uCi/m^3))
Deposition Pathways: (m^2 * (mrem/yr)/(uCi/sec)
AgeGroup: INFANT
Pathway: Grs/Goat/Milk (GMILK)

Nuclide	Bone	Liver	Thyroid	Kidney	Lung	GI-Lli	Skin	TB
RU-106	2.28e+04	0.00e+00	0.00e+00	2.70e+04	0.00e+00	1.73e+05	0.00e+00	2.85e+03
AG-110M	4.63e+07	3.38e+07	0.00e+00	4.84e+07	0.00e+00	1.75e+09	0.00e+00	2.24e+07
TE-125M	1.81e+07	6.05e+06	6.09e+06	0.00e+00	0.00e+00	8.62e+06	0.00e+00	2.45e+06
TE-127	7.62e+02	2.55e+02	6.20e+02	1.86e+03	0.00e+00	1.60e+04	0.00e+00	1.64e+02
TE-127M	5.05e+07	1.68e+07	1.46e+07	1.24e+08	0.00e+00	2.04e+07	0.00e+00	6.12e+06
TE-129	3.39e-10	1.17e-10	2.84e-10	8.45e-10	0.00e+00	2.71e-08	0.00e+00	7.92e-11
TE-129M	6.69e+07	2.29e+07	2.57e+07	1.67e+08	0.00e+00	3.99e+07	0.00e+00	1.03e+07
TE-131	4.59e-33	1.69e-33	4.09e-33	1.17e-32	0.00e+00	1.85e-31	0.00e+00	1.29e-33
TE-131M	4.06e+05	1.63e+05	3.31e+05	1.12e+06	0.00e+00	2.75e+06	0.00e+00	1.35e+05
TE-132	2.53e+06	1.26e+06	1.85e+06	7.85e+06	0.00e+00	4.64e+06	0.00e+00	1.17e+06
I-130	2.14e+06	4.70e+06	5.27e+08	5.17e+06	0.00e+00	1.01e+06	0.00e+00	1.89e+06
I-131	1.63e+09	1.92e+09	6.32e+11	2.25e+09	0.00e+00	6.87e+07	0.00e+00	8.46e+08
I-132	8.75e-01	1.78e+00	8.33e+01	1.98e+00	0.00e+00	1.44e+00	0.00e+00	6.33e-01
I-133	2.18e+07	3.18e+07	5.78e+09	3.73e+07	0.00e+00	5.37e+06	0.00e+00	9.30e+06
I-134	1.11e-11	2.28e-11	5.31e-10	2.55e-11	0.00e+00	2.35e-11	0.00e+00	8.10e-12
I-135	6.79e+04	1.35e+05	1.21e+07	1.50e+05	0.00e+00	4.88e+04	0.00e+00	4.92e+04
CS-134	1.09e+11	2.04e+11	0.00e+00	5.25e+10	2.15e+10	5.54e+08	0.00e+00	2.06e+10
CS-136	5.93e+09	1.74e+10	0.00e+00	6.95e+09	1.42e+09	2.65e+08	0.00e+00	6.51e+09
CS-137	1.54e+11	1.81e+11	0.00e+00	4.85e+10	1.96e+10	5.65e+08	0.00e+00	1.28e+10
CS-138	2.74e-22	4.45e-22	0.00e+00	2.22e-22	3.47e-23	7.12e-22	0.00e+00	2.16e-22
BA-139	5.30e-08	3.51e-11	0.00e+00	2.11e-11	2.13e-11	3.36e-06	0.00e+00	1.53e-09
BA-140	2.89e+07	2.89e+04	0.00e+00	6.87e+03	1.78e+04	7.11e+06	0.00e+00	1.49e+06
BA-141	5.48e-46	3.75e-49	0.00e+00	2.26e-49	2.28e-49	6.69e-45	0.00e+00	1.73e-47
BA-142	3.79e-80	3.15e-83	0.00e+00	1.81e-83	1.91e-83	1.56e-79	0.00e+00	1.87e-81
LA-140	4.87e+00	1.92e+00	0.00e+00	0.00e+00	0.00e+00	2.26e+04	0.00e+00	4.94e-01
LA-142	2.10e-11	7.71e-12	0.00e+00	0.00e+00	0.00e+00	1.31e-06	0.00e+00	1.85e-12
CE-141	5.20e+03	3.17e+03	0.00e+00	9.79e+02	0.00e+00	1.64e+06	0.00e+00	3.74e+02
CE-143	4.77e+01	3.17e+04	0.00e+00	9.22e+00	0.00e+00	1.85e+05	0.00e+00	3.61e+00
CE-144	2.79e+05	1.14e+05	0.00e+00	4.62e+04	0.00e+00	1.60e+07	0.00e+00	1.56e+04
PR-143	1.78e+02	6.67e+01	0.00e+00	2.48e+01	0.00e+00	9.41e+04	0.00e+00	8.84e+00
PR-144	8.00e-54	3.09e-54	0.00e+00	1.12e-54	0.00e+00	1.44e-49	0.00e+00	4.03e-55
ND-147	1.06e+02	1.09e+02	0.00e+00	4.19e+01	0.00e+00	6.89e+04	0.00e+00	6.66e+00
W-187	7.31e+03	5.08e+03	0.00e+00	0.00e+00	0.00e+00	2.99e+05	0.00e+00	1.76e+03
NP-239	4.38e+00	3.92e-01	0.00e+00	7.81e-01	0.00e+00	1.13e+04	0.00e+00	2.21e-01
PU-239	6.81e+06	7.65e+05	0.00e+00	6.32e+05	0.00e+00	3.41e+05	0.00e+00	1.75e+05
U-235	2.31e+09	0.00e+00	0.00e+00	4.90e+08	0.00e+00	4.00e+07	0.00e+00	1.76e+08

DOSE FACTORS: RADIONUCLIDES OTHER THAN NOBLE GASES
(Ref.3.9 Ch. 5.2, 5.3)

Units: Airborne Pathways & Tritium Ingestion: (mrem/yr)/(uCi/m^3))
Deposition Pathways: (m^2 * (mrem/yr)/(uCi/sec)
AgeGroup: INFANT
Pathway: Ground Plane Deposition (GPD)

Nuclide	Bone	Liver	Thyroid	Kidney	Lung	GI-Lli	Skin	TB
NA-24	1.20e+07	1.20e+07	1.20e+07	1.20e+07	1.20e+07	1.20e+07	1.39e+07	1.20e+07
CR-51	4.66e+06	4.66e+06	4.66e+06	4.66e+06	4.66e+06	4.66e+06	5.51e+06	4.66e+06
MN-54	1.39e+09	1.39e+09	1.39e+09	1.39e+09	1.39e+09	1.39e+09	1.63e+09	1.39e+09
MN-56	9.04e+05	9.04e+05	9.04e+05	9.04e+05	9.04e+05	9.04e+05	1.07e+06	9.04e+05
FE-59	2.72e+08	2.72e+08	2.72e+08	2.72e+08	2.72e+08	2.72e+08	3.20e+08	2.72e+08
CO-58	3.79e+08	3.79e+08	3.79e+08	3.79e+08	3.79e+08	3.79e+08	4.44e+08	3.79e+08
CO-60	2.15e+10	2.15e+10	2.15e+10	2.15e+10	2.15e+10	2.15e+10	2.53e+10	2.15e+10
NI-65	2.97e+05	2.97e+05	2.97e+05	2.97e+05	2.97e+05	2.97e+05	3.45e+05	2.97e+05
CU-64	6.07e+05	6.07e+05	6.07e+05	6.07e+05	6.07e+05	6.07e+05	6.88e+05	6.07e+05
ZN-65	7.47e+08	7.47e+08	7.47e+08	7.47e+08	7.47e+08	7.47e+08	8.60e+08	7.47e+08
BR-83	4.87e+03	4.87e+03	4.87e+03	4.87e+03	4.87e+03	4.87e+03	7.08e+03	4.87e+03
BR-84	2.03e+05	2.03e+05	2.03e+05	2.03e+05	2.03e+05	2.03e+05	2.36e+05	2.03e+05
RB-86	8.99e+06	8.99e+06	8.99e+06	8.99e+06	8.99e+06	8.99e+06	1.03e+07	8.99e+06
RB-88	3.31e+04	3.31e+04	3.31e+04	3.31e+04	3.31e+04	3.31e+04	3.78e+04	3.31e+04
RB-89	1.21e+05	1.21e+05	1.21e+05	1.21e+05	1.21e+05	1.21e+05	1.45e+05	1.21e+05
SR-89	2.16e+04	2.16e+04	2.16e+04	2.16e+04	2.16e+04	2.16e+04	2.51e+04	2.16e+04
SR-91	2.15e+06	2.15e+06	2.15e+06	2.15e+06	2.15e+06	2.15e+06	2.51e+06	2.15e+06
SR-92	7.77e+05	7.77e+05	7.77e+05	7.77e+05	7.77e+05	7.77e+05	8.63e+05	7.77e+05
Y-90	4.49e+03	4.49e+03	4.49e+03	4.49e+03	4.49e+03	4.49e+03	5.31e+03	4.49e+03
Y-91	1.07e+06	1.07e+06	1.07e+06	1.07e+06	1.07e+06	1.07e+06	1.21e+06	1.07e+06
Y-91M	1.00e+05	1.00e+05	1.00e+05	1.00e+05	1.00e+05	1.00e+05	1.16e+05	1.00e+05
Y-92	1.80e+05	1.80e+05	1.80e+05	1.80e+05	1.80e+05	1.80e+05	2.14e+05	1.80e+05
Y-93	1.83e+05	1.83e+05	1.83e+05	1.83e+05	1.83e+05	1.83e+05	2.51e+05	1.83e+05
ZR-95	2.45e+08	2.45e+08	2.45e+08	2.45e+08	2.45e+08	2.45e+08	2.84e+08	2.45e+08
ZR-97	2.96e+06	2.96e+06	2.96e+06	2.96e+06	2.96e+06	2.96e+06	3.45e+06	2.96e+06
NB-95	1.37e+08	1.37e+08	1.37e+08	1.37e+08	1.37e+08	1.37e+08	1.61e+08	1.37e+08
MO-99	4.00e+06	4.00e+06	4.00e+06	4.00e+06	4.00e+06	4.00e+06	4.63e+06	4.00e+06
TC-99M	1.84e+05	1.84e+05	1.84e+05	1.84e+05	1.84e+05	1.84e+05	2.11e+05	1.84e+05
TC-101	2.04e+04	2.04e+04	2.04e+04	2.04e+04	2.04e+04	2.04e+04	2.26e+04	2.04e+04
RU-103	1.08e+08	1.08e+08	1.08e+08	1.08e+08	1.08e+08	1.08e+08	1.26e+08	1.08e+08
RU-105	6.37e+05	6.37e+05	6.37e+05	6.37e+05	6.37e+05	6.37e+05	7.21e+05	6.37e+05
RU-106	4.22e+08	4.22e+08	4.22e+08	4.22e+08	4.22e+08	4.22e+08	5.07e+08	4.22e+08
AG-110M	3.44e+09	3.44e+09	3.44e+09	3.44e+09	3.44e+09	3.44e+09	4.01e+09	3.44e+09
TE-125M	1.55e+06	1.55e+06	1.55e+06	1.55e+06	1.55e+06	1.55e+06	2.13e+06	1.55e+06
TE-127	2.98e+03	2.98e+03	2.98e+03	2.98e+03	2.98e+03	2.98e+03	3.28e+03	2.98e+03
TE-127M	9.17e+04	9.17e+04	9.17e+04	9.17e+04	9.17e+04	9.17e+04	1.08e+05	9.17e+04
TE-129	2.62e+04	2.62e+04	2.62e+04	2.62e+04	2.62e+04	2.62e+04	3.10e+04	2.62e+04
TE-129M	1.98e+07	1.98e+07	1.98e+07	1.98e+07	1.98e+07	1.98e+07	2.31e+07	1.98e+07

DOSE FACTORS: RADIONUCLIDES OTHER THAN NOBLE GASES
(Ref.3.9 Ch. 5.2, 5.3)

Units: Airborne Pathways & Tritium Ingestion: (mrem/yr)/(µCi/m^3))
Deposition Pathways: (m^2 * (mrem/yr)/(µCi/sec)
AgeGroup: INFANT
Pathway: Ground Plane Deposition (GPD)

Nuclide	Bone	Liver	Thyroid	Kidney	Lung	GI-Lli	Skin	TB
TE-131	2.92e+04	2.92e+04	2.92e+04	2.92e+04	2.92e+04	2.92e+04	3.45e+07	2.92e+04
TE-131M	8.03e+06	8.03e+06	8.03e+06	8.03e+06	8.03e+06	8.03e+06	9.46e+06	8.03e+06
TE-132	4.24e+06	4.24e+06	4.24e+06	4.24e+06	4.24e+06	4.24e+06	4.98e+06	4.24e+06
I-130	5.51e+06	5.51e+06	5.51e+06	5.51e+06	5.51e+06	5.51e+06	6.69e+06	5.51e+06
I-131	1.72e+07	1.72e+07	1.72e+07	1.72e+07	1.72e+07	1.72e+07	2.09e+07	1.72e+07
I-132	1.25e+06	1.25e+06	1.25e+06	1.25e+06	1.25e+06	1.25e+06	1.47e+06	1.25e+06
I-133	2.45e+06	2.45e+06	2.45e+06	2.45e+06	2.45e+06	2.45e+06	2.98e+06	2.45e+06
I-134	4.47e+05	4.47e+05	4.47e+05	4.47e+05	4.47e+05	4.47e+05	5.31e+05	4.47e+05
I-135	2.53e+06	2.53e+06	2.53e+06	2.53e+06	2.53e+06	2.53e+06	2.95e+06	2.53e+06
CS-134	6.86e+09	6.86e+09	6.86e+09	6.86e+09	6.86e+09	6.86e+09	8.00e+09	6.86e+09
CS-136	1.51e+08	1.51e+08	1.51e+08	1.51e+08	1.51e+08	1.51e+08	1.71e+08	1.51e+08
CS-137	1.03e+10	1.03e+10	1.03e+10	1.03e+10	1.03e+10	1.03e+10	1.20e+10	1.03e+10
CS-138	3.59e+05	3.59e+05	3.59e+05	3.59e+05	3.59e+05	3.59e+05	4.10e+05	3.59e+05
BA-139	1.06e+05	1.06e+05	1.06e+05	1.06e+05	1.06e+05	1.06e+05	1.19e+05	1.06e+05
BA-140	2.05e+07	2.05e+07	2.05e+07	2.05e+07	2.05e+07	2.05e+07	2.35e+07	2.05e+07
BA-141	4.17e+04	4.17e+04	4.17e+04	4.17e+04	4.17e+04	4.17e+04	4.75e+04	4.17e+04
BA-142	4.49e+04	4.49e+04	4.49e+04	4.49e+04	4.49e+04	4.49e+04	5.11e+04	4.49e+04
LA-140	1.92e+07	1.92e+07	1.92e+07	1.92e+07	1.92e+07	1.92e+07	2.18e+07	1.92e+07
LA-142	7.60e+05	7.60e+05	7.60e+05	7.60e+05	7.60e+05	7.60e+05	9.12e+05	7.60e+05
CE-141	1.37e+07	1.37e+07	1.37e+07	1.37e+07	1.37e+07	1.37e+07	1.54e+07	1.37e+07
CE-143	2.31e+06	2.31e+06	2.31e+06	2.31e+06	2.31e+06	2.31e+06	2.63e+06	2.31e+06
CE-144	6.95e+07	6.95e+07	6.95e+07	6.95e+07	6.95e+07	6.95e+07	8.04e+07	6.95e+07
PR-144	1.84e+03	1.84e+03	1.84e+03	1.84e+03	1.84e+03	1.84e+03	2.11e+03	1.84e+03
ND-147	8.39e+06	8.39e+06	8.39e+06	8.39e+06	8.39e+06	8.39e+06	1.01e+07	8.39e+06
W-187	2.35e+06	2.35e+06	2.35e+06	2.35e+06	2.35e+06	2.35e+06	2.73e+06	2.35e+06
NP-239	1.71e+06	1.71e+06	1.71e+06	1.71e+06	1.71e+06	1.71e+06	1.98e+06	1.71e+06
PU-239	2.29e+06	2.29e+06	2.29e+06	2.29e+06	2.29e+06	2.29e+06	2.23e+07	2.29e+06
U-235	9.28e+09	9.28e+09	9.28e+09	9.28e+09	9.28e+09	9.28e+09	1.16e+10	9.28e+09

DOSE FACTORS: RADIONUCLIDES OTHER THAN NOBLE GASES
(Ref.3.9 Ch. 5.2, 5.3)

Units: Airborne Pathways & Tritium Ingestion: (mrem/yr)/(µCi/m^3))
Deposition Pathways: (m^2 * (mrem/yr)/(µCi/sec)
AgeGroup: INFANT
Pathway: Inhalation (INHL)

Nuclide	Bone	Liver	Thyroid	Kidney	Lung	GI-Lli	Skin	TB
H-3	0.00e+00	6.47e+02	6.47e+02	6.47e+02	6.47e+02	6.47e+02	0.00e+00	6.47e+02
C-14	2.65e+04	5.31e+03	5.31e+03	5.31e+03	5.31e+03	5.31e+03	0.00e+00	5.31e+03
NA-24	1.06e+04	1.06e+04	1.06e+04	1.06e+04	1.06e+04	1.06e+04	0.00e+00	1.06e+04
P-32	2.03e+06	1.12e+05	0.00e+00	0.00e+00	0.00e+00	1.61e+04	0.00e+00	7.74e+04
CR-51	0.00e+00	0.00e+00	5.75e+01	1.32e+01	1.28e+04	3.57e+02	0.00e+00	8.95e+01
MN-54	0.00e+00	2.53e+04	0.00e+00	4.98e+03	1.00e+06	7.06e+03	0.00e+00	4.98e+03
MN-56	0.00e+00	1.54e+00	0.00e+00	1.10e+00	1.25e+04	7.17e+04	0.00e+00	2.21e-01
FE-55	1.97e+04	1.18e+04	0.00e+00	0.00e+00	8.69e+04	1.10e+03	0.00e+00	3.33e+03
FE-59	1.36e+04	2.35e+04	0.00e+00	0.00e+00	1.02e+06	2.48e+04	0.00e+00	9.48e+03
CO-58	0.00e+00	1.22e+03	0.00e+00	0.00e+00	7.77e+05	1.11e+04	0.00e+00	1.82e+03
CO-60	0.00e+00	8.02e+03	0.00e+00	0.00e+00	4.51e+06	3.19e+04	0.00e+00	1.18e+04
NI-63	3.39e+05	2.04e+04	0.00e+00	0.00e+00	2.09e+05	2.42e+03	0.00e+00	1.16e+04
NI-65	2.39e+00	2.84e-01	0.00e+00	0.00e+00	8.12e+03	5.01e+04	0.00e+00	1.23e-01
CU-64	0.00e+00	1.88e+00	0.00e+00	3.98e+00	9.30e+03	1.50e+04	0.00e+00	7.74e-01
ZN-65	1.93e+04	6.26e+04	0.00e+00	3.25e+04	6.47e+05	5.14e+04	0.00e+00	3.11e+04
ZN-69	5.39e-02	9.67e-02	0.00e+00	4.02e-02	1.47e+03	1.32e+04	0.00e+00	7.18e-03
BR-83	0.00e+00	0.00e+00	0.00e+00	0.00e+00	0.00e+00	0.00e+00	0.00e+00	3.81e+02
BR-84	0.00e+00	0.00e+00	0.00e+00	0.00e+00	0.00e+00	0.00e+00	0.00e+00	4.00e+02
BR-85	0.00e+00	0.00e+00	0.00e+00	0.00e+00	0.00e+00	0.00e+00	0.00e+00	2.04e+01
RB-86	0.00e+00	1.90e+05	0.00e+00	0.00e+00	0.00e+00	3.04e+03	0.00e+00	8.82e+04
RB-88	0.00e+00	5.57e+02	0.00e+00	0.00e+00	0.00e+00	3.39e+02	0.00e+00	2.87e+02
RB-89	0.00e+00	3.21e+02	0.00e+00	0.00e+00	0.00e+00	6.82e+01	0.00e+00	2.06e+02
SR-89	3.98e+05	0.00e+00	0.00e+00	0.00e+00	2.03e+06	6.40e+04	0.00e+00	1.14e+04
SR-90	4.09e+07	0.00e+00	0.00e+00	0.00e+00	1.12e+07	1.31e+05	0.00e+00	2.59e+06
SR-91	9.56e+01	0.00e+00	0.00e+00	0.00e+00	5.26e+04	7.34e+04	0.00e+00	3.46e+00
SR-92	1.05e+01	0.00e+00	0.00e+00	0.00e+00	2.38e+04	1.40e+05	0.00e+00	3.91e-01
Y-90	3.29e+03	0.00e+00	0.00e+00	0.00e+00	2.69e+05	1.04e+05	0.00e+00	8.82e+01
Y-91	5.88e+05	0.00e+00	0.00e+00	0.00e+00	2.45e+06	7.03e+04	0.00e+00	1.57e+04
Y-91M	4.07e-01	0.00e+00	0.00e+00	0.00e+00	2.79e+03	2.35e+03	0.00e+00	1.39e-02
Y-92	1.64e+01	0.00e+00	0.00e+00	0.00e+00	2.45e+04	1.27e+05	0.00e+00	4.61e-01
Y-93	1.50e+02	0.00e+00	0.00e+00	0.00e+00	7.64e+04	1.67e+05	0.00e+00	4.07e+00
ZR-95	1.15e+05	2.79e+04	0.00e+00	3.11e+04	1.75e+06	2.17e+04	0.00e+00	2.03e+04
ZR-97	1.50e+02	2.56e+01	0.00e+00	2.59e+01	1.10e+05	1.40e+05	0.00e+00	1.17e+01
NB-95	1.57e+04	6.43e+03	0.00e+00	4.72e+03	4.79e+05	1.27e+04	0.00e+00	3.78e+03
MO-99	0.00e+00	1.65e+02	0.00e+00	2.65e+02	1.35e+05	4.87e+04	0.00e+00	3.23e+01
TC-99M	1.40e-03	2.88e-03	0.00e+00	3.11e-02	8.11e+02	2.03e+03	0.00e+00	3.72e-02
TC-101	6.51e-05	8.23e-05	0.00e+00	9.79e-04	5.84e+02	8.44e+02	0.00e+00	8.12e-04
RU-103	2.02e+03	0.00e+00	0.00e+00	4.24e+03	5.52e+05	1.61e+04	0.00e+00	6.79e+02

DOSE FACTORS: RADIONUCLIDES OTHER THAN NOBLE GASES
(Ref.3.9 Ch. 5.2, 5.3)

Units: Airborne Pathways & Tritium Ingestion: (mrem/yr)/(µCi/m^3))
Deposition Pathways: (m^2 * (mrem/yr)/(µCi/sec)
AgeGroup: INFANT
Pathway: Inhalation (INHL)

Nuclide	Bone	Liver	Thyroid	Kidney	Lung	GI-Lli	Skin	TB
RU-105	1.22e+00	0.00e+00	0.00e+00	8.99e-01	1.57e+04	4.84e+04	0.00e+00	4.10e-01
RU-106	8.68e+04	0.00e+00	0.00e+00	1.07e+05	1.16e+07	1.64e+05	0.00e+00	1.09e+04
AG-110M	9.98e+03	7.22e+03	0.00e+00	1.09e+04	3.67e+06	3.30e+04	0.00e+00	5.00e+03
TE-125M	4.76e+03	1.99e+03	1.62e+03	0.00e+00	4.47e+05	1.29e+04	0.00e+00	6.58e+02
TE-127	2.23e+00	9.53e-01	1.85e+00	4.86e+00	1.04e+04	2.44e+04	0.00e+00	4.89e-01
TE-127M	1.67e+04	6.90e+03	4.87e+03	3.75e+04	1.31e+06	2.73e+04	0.00e+00	2.07e+03
TE-129	7.88e-02	3.47e-02	6.75e-02	1.75e-01	3.00e+03	2.63e+04	0.00e+00	1.88e-02
TE-129M	1.41e+04	6.09e+03	5.47e+03	3.18e+04	1.68e+06	6.90e+04	0.00e+00	2.23e+03
TE-131	1.74e-02	8.22e-03	1.58e-02	3.99e-02	2.06e+03	8.22e+03	0.00e+00	5.00e-03
TE-131M	1.07e+02	5.50e+01	8.93e+01	2.65e+02	1.99e+05	1.19e+05	0.00e+00	3.63e+01
TE-132	3.72e+02	2.37e+02	2.79e+02	1.04e+03	3.40e+05	4.41e+04	0.00e+00	1.76e+02
I-130	6.36e+03	1.39e+04	1.60e+06	1.53e+04	0.00e+00	1.99e+03	0.00e+00	5.57e+03
I-131	3.79e+04	4.44e+04	1.48e+07	5.18e+04	0.00e+00	1.06e+03	0.00e+00	1.96e+04
I-132	1.69e+03	3.54e+03	1.69e+05	3.95e+03	0.00e+00	1.90e+03	0.00e+00	1.26e+03
I-133	1.32e+04	1.92e+04	3.56e+06	2.24e+04	0.00e+00	2.16e+03	0.00e+00	5.60e+03
I-134	9.21e+02	1.88e+03	4.45e+04	2.09e+03	0.00e+00	1.29e+03	0.00e+00	6.65e+02
I-135	3.86e+03	7.60e+03	6.96e+05	8.47e+03	0.00e+00	1.83e+03	0.00e+00	2.77e+03
CS-134	3.96e+05	7.03e+05	0.00e+00	1.90e+05	7.97e+04	1.33e+03	0.00e+00	7.45e+04
CS-136	4.83e+04	1.35e+05	0.00e+00	5.64e+04	1.18e+04	1.43e+03	0.00e+00	5.29e+04
CS-137	5.49e+05	6.12e+05	0.00e+00	1.72e+05	7.13e+04	1.33e+03	0.00e+00	4.55e+04
CS-138	5.05e+02	7.81e+02	0.00e+00	4.10e+02	6.54e+01	8.76e+02	0.00e+00	3.98e+02
BA-139	1.48e+00	9.84e-04	0.00e+00	5.92e-04	5.95e+03	5.10e+04	0.00e+00	4.30e-02
BA-140	5.60e+04	5.60e+01	0.00e+00	1.34e+01	1.60e+06	3.84e+04	0.00e+00	2.90e+03
BA-141	1.57e-01	1.08e-04	0.00e+00	6.50e-05	2.97e+03	4.75e+03	0.00e+00	4.97e-03
BA-142	3.98e-02	3.30e-05	0.00e+00	1.90e-05	1.55e+03	6.93e+02	0.00e+00	1.96e-03
LA-140	5.05e+02	2.00e+02	0.00e+00	0.00e+00	1.68e+05	8.48e+04	0.00e+00	5.15e+01
LA-142	1.03e+00	3.77e-01	0.00e+00	0.00e+00	8.22e+03	5.95e+04	0.00e+00	9.04e-02
CE-141	2.77e+04	1.67e+04	0.00e+00	5.25e+03	5.17e+05	2.16e+04	0.00e+00	1.99e+03
CE-143	2.93e+02	1.93e+02	0.00e+00	5.64e+01	1.16e+05	4.97e+04	0.00e+00	2.21e+01
CE-144	3.19e+06	1.21e+06	0.00e+00	5.38e+05	9.84e+06	1.48e+05	0.00e+00	1.76e+05
PR-143	1.40e+04	5.24e+03	0.00e+00	1.97e+03	4.33e+05	3.72e+04	0.00e+00	6.99e+02
PR-144	4.79e-02	1.85e-02	0.00e+00	6.72e-03	1.61e+03	4.28e+03	0.00e+00	2.41e-03
ND-147	7.94e+03	8.13e+03	0.00e+00	3.15e+03	3.22e+05	3.12e+04	0.00e+00	5.00e+02
W-187	1.30e+01	9.02e+00	0.00e+00	0.00e+00	3.96e+04	3.56e+04	0.00e+00	3.12e+00
NP-239	3.71e+02	2.98e+02	0.00e+00	6.62e+01	5.95e+04	2.49e+04	0.00e+00	1.88e+01
PU-239	4.10e+09	2.46e+09	0.00e+00	6.93e+08	1.19e+09	5.99e+04	0.00e+00	1.88e+08
U-235	7.01e+07	0.00e+00	0.00e+00	1.41e+07	4.59e+08	7.03e+07	0.00e+00	4.93e+06

DOSE FACTORS: RADIONUCLIDES OTHER THAN NOBLE GASES
(Ref.3.9 Ch. 5.2, 5.3)

Units: Airborne Pathways & Tritium Ingestion: (mrem/yr)/(µCi/m^3))
Deposition Pathways: (m^2 * (mrem/yr)/(µCi/sec)
AgeGroup: INFANT
Pathway: Grs/Cow/Milk (CMILK)

Nuclide	Bone	Liver	Thyroid	Kidney	Lung	GI-Lli	Skin	TB
H-3	0.00e+00	2.38e+03	2.38e+03	2.38e+03	2.38e+03	2.38e+03	0.00e+00	2.38e+03
C-14	2.34e+09	5.00e+08	5.00e+08	5.00e+08	5.00e+08	5.00e+08	0.00e+00	5.00e+08
NA-24	1.55e+07	1.55e+07	1.55e+07	1.55e+07	1.55e+07	1.55e+07	0.00e+00	1.55e+07
P-32	1.60e+11	9.43e+09	0.00e+00	0.00e+00	0.00e+00	2.17e+09	0.00e+00	6.21e+09
CR-51	0.00e+00	0.00e+00	1.05e+05	2.30e+04	2.05e+05	4.70e+06	0.00e+00	1.61e+05
MN-54	0.00e+00	3.90e+07	0.00e+00	8.64e+06	0.00e+00	1.43e+07	0.00e+00	8.84e+06
MN-56	0.00e+00	3.20e-02	0.00e+00	2.75e-02	0.00e+00	2.91e+00	0.00e+00	5.51e-03
FE-55	1.35e+08	8.73e+07	0.00e+00	0.00e+00	4.27e+07	1.11e+07	0.00e+00	2.33e+07
FE-59	2.24e+08	3.92e+08	0.00e+00	0.00e+00	1.16e+08	1.87e+08	0.00e+00	1.55e+08
CO-58	0.00e+00	2.43e+07	0.00e+00	0.00e+00	0.00e+00	6.04e+07	0.00e+00	6.05e+07
CO-60	0.00e+00	8.82e+07	0.00e+00	0.00e+00	0.00e+00	2.10e+08	0.00e+00	2.08e+08
NI-63	3.50e+10	2.16e+09	0.00e+00	0.00e+00	0.00e+00	1.08e+08	0.00e+00	1.21e+09
NI-65	3.57e+00	4.04e-01	0.00e+00	0.00e+00	0.00e+00	3.08e+01	0.00e+00	1.84e-01
CU-64	0.00e+00	1.86e+05	0.00e+00	3.15e+05	0.00e+00	3.82e+06	0.00e+00	8.62e+04
ZN-65	5.55e+09	1.90e+10	0.00e+00	9.23e+09	0.00e+00	1.61e+10	0.00e+00	8.78e+09
ZN-69	2.12e-11	3.81e-11	0.00e+00	1.58e-11	0.00e+00	3.11e-09	0.00e+00	2.84e-12
BR-83	0.00e+00	0.00e+00	0.00e+00	0.00e+00	0.00e+00	0.00e+00	0.00e+00	9.52e-01
BR-84	0.00e+00	0.00e+00	0.00e+00	0.00e+00	0.00e+00	0.00e+00	0.00e+00	1.37e-22
RB-86	0.00e+00	2.23e+10	0.00e+00	0.00e+00	0.00e+00	5.70e+08	0.00e+00	1.10e+10
RB-88	0.00e+00	2.19e-44	0.00e+00	0.00e+00	0.00e+00	2.13e-44	0.00e+00	1.20e-44
RB-89	0.00e+00	5.02e-53	0.00e+00	0.00e+00	0.00e+00	1.71e-53	0.00e+00	3.46e-53
SR-89	1.26e+10	0.00e+00	0.00e+00	0.00e+00	0.00e+00	2.59e+08	0.00e+00	3.61e+08
SR-90	1.22e+11	0.00e+00	0.00e+00	0.00e+00	0.00e+00	1.52e+09	0.00e+00	3.10e+10
SR-91	2.73e+05	0.00e+00	0.00e+00	0.00e+00	0.00e+00	3.23e+05	0.00e+00	9.88e+03
SR-92	4.72e+00	0.00e+00	0.00e+00	0.00e+00	0.00e+00	5.09e+01	0.00e+00	1.75e-01
Y-90	6.82e+02	0.00e+00	0.00e+00	0.00e+00	0.00e+00	9.42e+05	0.00e+00	1.83e+01
Y-91	7.33e+04	0.00e+00	0.00e+00	0.00e+00	0.00e+00	5.25e+06	0.00e+00	1.95e+03
Y-91M	6.00e-19	0.00e+00	0.00e+00	0.00e+00	0.00e+00	2.00e-15	0.00e+00	2.04e-20
Y-92	5.45e-04	0.00e+00	0.00e+00	0.00e+00	0.00e+00	1.04e+01	0.00e+00	1.53e-05
Y-93	2.17e+00	0.00e+00	0.00e+00	0.00e+00	0.00e+00	1.71e+04	0.00e+00	5.90e-02
ZR-95	6.81e+03	1.66e+03	0.00e+00	1.79e+03	0.00e+00	8.26e+05	0.00e+00	1.18e+03
ZR-97	4.07e+00	6.99e-01	0.00e+00	7.05e-01	0.00e+00	4.46e+04	0.00e+00	3.19e-01
NB-95	5.94e+05	2.44e+05	0.00e+00	1.75e+05	0.00e+00	2.06e+08	0.00e+00	1.41e+05
MO-99	0.00e+00	2.08e+08	0.00e+00	3.11e+08	0.00e+00	6.86e+07	0.00e+00	4.06e+07
TC-99M	2.77e+01	5.71e+01	0.00e+00	6.15e+02	2.99e+01	1.66e+04	0.00e+00	7.36e+02
TC-101	2.99e-59	3.77e-59	0.00e+00	4.48e-58	2.05e-59	6.40e-57	0.00e+00	3.73e-58
RU-103	8.67e+03	0.00e+00	0.00e+00	1.80e+04	0.00e+00	1.06e+05	0.00e+00	2.90e+03
RU-105	8.14e-03	0.00e+00	0.00e+00	5.98e-02	0.00e+00	3.24e+00	0.00e+00	2.74e-03

DOSE FACTORS: RADIONUCLIDES OTHER THAN NOBLE GASES
(Ref.3.9 Ch. 5.2, 5.3)

Units: Airborne Pathways & Tritium Ingestion: (mrem/yr)/(µCi/m^3))
Deposition Pathways: (m^2 * (mrem/yr)/(µCi/sec)
AgeGroup: INFANT
Pathway: Grs/Cow/Milk (CMILK)

Nuclide	Bone	Liver	Thyroid	Kidney	Lung	GI-Lli	Skin	TB
RU-106	1.90e+05	0.00e+00	0.00e+00	2.25e+05	0.00e+00	1.45e+06	0.00e+00	2.38e+04
AG-110M	3.86e+08	2.82e+08	0.00e+00	4.03e+08	0.00e+00	1.46e+10	0.00e+00	1.86e+08
TE-125M	1.51e+08	5.04e+07	5.07e+07	0.00e+00	0.00e+00	7.18e+07	0.00e+00	2.04e+07
TE-127	6.35e+03	2.13e+03	5.17e+03	1.55e+04	0.00e+00	1.33e+05	0.00e+00	1.37e+03
TE-127M	4.21e+08	1.40e+08	1.22e+08	1.04e+09	0.00e+00	1.70e+08	0.00e+00	5.10e+07
TE-129	2.83e-09	9.75e-10	2.37e-09	7.04e-09	0.00e+00	2.26e-07	0.00e+00	6.60e-10
TE-129M	5.57e+08	1.91e+08	2.14e+08	1.39e+09	0.00e+00	3.33e+08	0.00e+00	8.58e+07
TE-131	3.82e-32	1.41e-32	3.41e-32	9.78e-32	0.00e+00	1.55e-30	0.00e+00	1.07e-32
TE-131M	3.38e+06	1.36e+06	2.76e+06	9.37e+06	0.00e+00	2.29e+07	0.00e+00	1.12e+06
TE-132	2.11e+07	1.05e+07	1.54e+07	6.54e+07	0.00e+00	3.87e+07	0.00e+00	9.76e+06
I-130	1.78e+06	3.92e+06	4.39e+08	4.31e+06	0.00e+00	8.40e+05	0.00e+00	1.57e+06
I-131	1.36e+09	1.60e+09	5.27e+11	1.87e+09	0.00e+00	5.72e+07	0.00e+00	7.05e+08
I-132	7.29e-01	1.48e+00	6.94e+01	1.65e+00	0.00e+00	1.20e+00	0.00e+00	5.27e-01
I-133	1.82e+07	2.65e+07	4.81e+09	3.11e+07	0.00e+00	4.48e+06	0.00e+00	7.75e+06
I-134	9.27e-12	1.90e-11	4.43e-10	2.12e-11	0.00e+00	1.96e-11	0.00e+00	6.75e-12
I-135	5.65e+04	1.13e+05	1.01e+07	1.25e+05	0.00e+00	4.07e+04	0.00e+00	4.10e+04
CS-134	3.65e+10	6.80e+10	0.00e+00	1.75e+10	7.18e+09	1.85e+08	0.00e+00	6.87e+09
CS-136	1.98e+09	5.81e+09	0.00e+00	2.32e+09	4.74e+08	8.83e+07	0.00e+00	2.17e+09
CS-137	5.15e+10	6.02e+10	0.00e+00	1.62e+10	6.55e+09	1.88e+08	0.00e+00	4.27e+09
CS-138	9.13e-23	1.48e-22	0.00e+00	7.40e-23	1.16e-23	2.37e-22	0.00e+00	7.20e-23
BA-139	4.42e-07	2.93e-10	0.00e+00	1.76e-10	1.78e-10	2.80e-05	0.00e+00	1.28e-08
BA-140	2.41e+08	2.41e+05	0.00e+00	5.72e+04	1.48e+05	5.92e+07	0.00e+00	1.24e+07
BA-141	4.57e-45	3.13e-48	0.00e+00	1.88e-48	1.90e-48	5.58e-44	0.00e+00	1.44e-46
BA-142	3.16e-79	2.62e-82	0.00e+00	1.51e-82	1.59e-82	1.30e-78	0.00e+00	1.55e-80
LA-140	4.06e+01	1.60e+01	0.00e+00	0.00e+00	0.00e+00	1.88e+05	0.00e+00	4.12e+00
LA-142	1.75e-10	6.43e-11	0.00e+00	0.00e+00	0.00e+00	1.09e-05	0.00e+00	1.54e-11
CE-141	4.34e+04	2.65e+04	0.00e+00	8.16e+03	0.00e+00	1.37e+07	0.00e+00	3.11e+03
CE-143	3.98e+02	2.64e+05	0.00e+00	7.68e+01	0.00e+00	1.54e+06	0.00e+00	3.01e+01
CE-144	2.33e+06	9.52e+05	0.00e+00	3.85e+05	0.00e+00	1.33e+08	0.00e+00	1.30e+05
PR-143	1.49e+03	5.56e+02	0.00e+00	2.07e+02	0.00e+00	7.84e+05	0.00e+00	7.37e+01
PR-144	6.66e-53	2.58e-53	0.00e+00	9.34e-54	0.00e+00	1.20e-48	0.00e+00	3.36e-54
ND-147	8.81e+02	9.05e+02	0.00e+00	3.49e+02	0.00e+00	5.74e+05	0.00e+00	5.55e+01
W-187	6.09e+04	4.24e+04	0.00e+00	0.00e+00	0.00e+00	2.49e+06	0.00e+00	1.46e+04
NP-239	3.65e+01	3.27e+00	0.00e+00	6.51e+00	0.00e+00	9.44e+04	0.00e+00	1.85e+00
PU-239	5.68e+07	6.38e+06	0.00e+00	5.27e+06	0.00e+00	2.84e+06	0.00e+00	1.46e+06
U-235	1.92e+10	0.00e+00	0.00e+00	4.09e+09	0.00e+00	3.33e+08	0.00e+00	1.46e+09

EVALUATION OF INSIGNIFICANT EFFLUENT PATHWAY GASEOUS RELEASES
(Ref. 3.14)

The following calculation is utilized for evaluation of gaseous effluent releases from insignificant effluent gaseous release pathways as identified in Section 2.4.5. The offsite dose is calculated via the methodology outlined in Sections 6.1 or 6.2 by inputting the Insignificant Effluent Pathway Release Rate (µCi/sec) calculated as follows:

Release Rate (µCi/sec) = Concentration (µCi/cc) x TC x Evap. Rate (cc/min or cc/sec)

Where:

Release Rate	=	Gaseous effluent release rate (µCi/sec) from sources defined in Section 2.4.5.
Concentration	=	Radionuclide concentration (µCi/cc) in Chemistry samples from sources defined in Section 2.4.5.
TC	=	Coolant-Condensate Transfer Coefficient (unitless; see values below)
Evap. Rate	=	Evaporation Rate of Insignificant Effluent Source Volume (see values below)

TC Values;

Tritium (H-3) = 1.0
Noble Gases = 1.0
Iodines = 0.02
All Others = 0.001

Evap. Rate:

RWST = 8.052 cc/min
CST (U1 & U2) = 26.22 cc/min
Main Turbine/RFPT Lube Oil Release Rate = 12.66 cc/sec
Hydrogen Seal Oil Vapor Release Rate = 10.05 cc/sec
Total Vapor Release Rate (CST & Oil) = 1388.82 cc/min

If a Release Flow-rate (cfm) is desired to evaluate Activity Released,

then, if Evaporation Rate = cc/sec, then Evaporation Rate/472 = Flow-rate (cfm)

or , if Evaporation Rate = cc/min, then Evaporation Rate x 2.19e-3 = Flow-rate (cfm)

PARAMETERS USED TO DETERMINE PARTICULATE/IODINE LIMITING RELEASE RATES

NUCLIDE	TOTAL RELEASE (1) (Ci/year per reactor)
I-131[2]	1.02E-01/1.23E-01
I-133[2]	1.14E+00/1.45E+00
Cr-51	2.08E-05
Mn-54	5.52E-05
Fe-59	7.10E-06
Co-58	7.00E-06
Co-60	1.23E-04
Zn-65	6.53E-05
Sr-89	1.25E-05
Sr-90	1.40E-07
Nb-95	1.00E-04
Zr-95	1.81E-05
Ru-103	4.21E-05
Ag-110m	2.40E-08
Sb-124	1.40E-06
Cs-134	7.46E-05
Cs-136	7.10E-06
Cs-137	1.11E-04
Ba-140	2.51E-04
Ce-141	2.91E-05

Annual Average Dispersion Parameters - Limiting Site Boundary (3)

Relative Concentration	1.46E-5 sec/m^3
Decayed Relative Concentration	1.46E-5 sec/m^3
Decayed, Depleted Relative Concentration	1.35E-5 sec/m^3
Deposition Rate	3.35E-8 m^{-2}

Notes:

1. Design basis "expected" gaseous effluent releases per EC-RADN-1041 (particulates with half-lives greater than 8 days)
2. Use limiting case Normal Water Chemistry/Hydrogen Water Chemistry
3. 1973-76 Meteorological Data Updated to 1996 Land Use Survey per EC-RADN-1041

PROCEDURE CHANGE PROCESS FORM

1. PCAF NO. 2003-1238 | 2. PAGE 1 OF 4 | 3. PROC. NO. ODCM-QA-005 REV. 2

4. FORMS REVISED - ___ R___, - ___ R___, - ___ R___, - ___ R___, - ___ R___, - ___ R___

5. PROCEDURE TITLE
WATERBORNE EFFLUENT DOSE CALCULATIONS

6. REQUESTED CHANGE
PERIODIC REVIEW ☒ NO ☐ YES
INCORPORATE PCAFS ☐ NO ☒ YES # 2002-1696 # _____ # _____ # _____
REVISION ☐ PCAF ☒ DELETION ☐ (CHECK ONE ONLY)

7. SUMMARY OF / REASON FOR CHANGE
The change being made is the addition of the Nuclear Emergency Planning group to the "RECOMMENDED REVIEWS" section on the procedure cover page.

This change to ODCM-QA-005 is an administrative correction and does not decrease the level of effluent control or the accuracy and/or reliability of dose calculations or setpoint determinations as required by 10CFR20.1302, 40CFR190, 10CFR50.36a and 10CFR50 App. I.

Continued ☐

8. DETERMINE COMMITTEE REVIEW REQUIREMENTS
(Refer to Section 6.1.4)
PORC REVIEW REQ'D? ☒ NO ☐ YES

9. PORC MTG# N/A

BLOCKS 11 THRU 16 ARE ON PAGE 2 OF FORM

17. Francis J. Hickey / 1141 / 3/24/03
PREPARER (Print or Type) | ETN | DATE

18. COMMUNICATION OF CHANGE REQUIRED?
☒ NO ☐ YES (TYPE) _____

19. Raymond E. Doebler 3/24/03
RESPONSIBLE SUPERVISOR | DATE

SIGNATURE ATTESTS THAT RESPONSIBLE SUPERVISOR HAS CONDUCTED QADR AND TECHNICAL REVIEW UNLESS OTHERWISE DOCUMENTED IN BLOCK 16 OR ATTACHED REVIEW FORMS. CROSS DISCIPLINE REVIEW (IF REQUIRED) HAS BEEN COMPLETED BY SIGNATURE IN BLOCK 16 OR ATTACHED REVIEW FORMS.

20. N/A
FUM APPROVAL | DATE

21. RESPONSIBLE APPROVER
N/A
INITIALS | DATE

ENTER N/A IF FUM HAS APPROVAL AUTHORITY

RECEIVED
MAR 25 2003
DOCUMENT CONTROL SERVICES - SSES

PROCEDURE CHANGE PROCESS FORM

1. PCAF NO. 2003- 7238 | 2. PAGE 2 OF 4 | 3. PROC. NO. ODCM-QA-005 REV. 2

11. This question documents the outcome of the 50.59 and 72.48 Review required by NDAP-QA-0726. Either 11a, b, c or d must be checked "YES" and the appropriate form attached or referenced.
    a. This change is an Administrative Correction for which 50.59 and 72.48 are not applicable. ☒ YES ☒ N/A
    b. This change is a change to any surveillance, maintenance or administrative procedure for which 50.59 and 72.48 are not applicable. ☐ YES ☒ N/A
    c. This change is bounded by a 50.59/72.48 Screen/Evaluation, therefore, no new 50.59/72.48 Evaluation is required. ☐ YES ☒ N/A
       Screen/Evaluation No. _____
    d. 50.59 and/or 72.48 are applicable to this change and a 50.59/72.48 Screen/Evaluation is attached. ☐ YES ☒ N/A
12. This change is consistent with the FSAR or an FSAR change is required. ☒ YES
    Change Request No. _____
13. Should this change be reviewed for potential effects on Training Needs or Material? If YES, enter an Action Item @ NIMS/Action/Gen Work Mech/PICN ☐ YES ☒ NO
14. Is a Surveillance Procedure Review Checklist required per NDAP-QA-0722? ☐ YES ☒ NO
15. Is a Special, Infrequent or Complex Test/Evolution Analysis Form required per NDAP-QA-0320? (SICT/E form does not need to be attached.) ☐ YES ☒ NO

16. Reviews may be documented below or by attaching Document Review Forms NDAP-QA-0101-1.

REVIEW	REVIEWED BY WITH NO COMMENTS	DATE
QADR		
TECHNICAL REVIEW		
REACTOR ENGINEERING/NUCLEAR FUELS *		
IST **		
OPERATIONS		
NUCLEAR SYSTEMS ENGINEERING		
NUCLEAR MODIFICATIONS		
MAINTENANCE		
HEALTH PHYSICS		
NUCLEAR TECHNOLOGY		
CHEMISTRY		
OTHER _____		

* Required for changes that affect, or have potential for affecting core reactivity, nuclear fuel, core power level indication or impact the thermal power heat balance. ([58])

** Required for changes to Section XI Inservice Test Acceptance Criteria.

PCAF # 2003-1258
Page 3 of 4

PROCEDURE COVER SHEET

PPL SUSQUEHANNA, LLC	NUCLEAR DEPARTMENT PROCEDURE	
WATERBORNE EFFLUENT DOSE CALCULATIONS		ODCM-QA-005 Revision 2 Page 1 of 48

QUALITY CLASSIFICATION:	APPROVAL CLASSIFICATION:
☒ QA Program ☐ Non-QA Program	☒ Plant ☐ Non-Plant ☐ Instruction

EFFECTIVE DATE: 9-20-2002

PERIODIC REVIEW FREQUENCY: N/A

PERIODIC REVIEW DUE DATE: N/A

RECOMMENDED REVIEWS:

Nuclear Emergency Planning

Procedure Owner: Francis J. Hickey

Responsible Supervisor: Chemistry Supervisor - SSES

Responsible FUM: Chemistry Supervisor - SSES

Responsible Approver: Vice President – Nuclear Operations

PCAF

PROCEDURE REVISION SUMMARY

TITLE: WATERBORNE EFFLUENT DOSE CALCULATIONS

Most of the revisions described below are editorial in nature. The changes made do not reduce or compromise the level of effluent control or the accuracy and/or reliability of dose calculations or setpoint determinations as required by 10CFR20.1302, 40CFR190, 10CFR50.36a and 10CFR50, Appendix I. Additionally, the changes outlined below (1) do not alter the conduct of the radiological environmental monitoring program, (2) do not change the radioactive effluent controls and radiological environmental monitoring activities, and (3) do not change the information to be included in the Annual Radiological Environmental Operating and Radioactive Effluent Release Reports.

Various sections have been revised and/or deleted to incorporate the change in the computer program used by PPL Susquehanna, LLC in support of offsite dose assessment (LADTAP replaced by RETDAS) from routine liquid and gaseous effluents.

1. Removed redundant steps and gray shading incorporated for the transition to ITS.

2. Section 4.2 has been deleted and Section 4.1 revised to clarify responsibilities to support compliance with the applicable TRM sections. The methodology for liquid and gaseous effluent offsite dose assessment is provided in the ODCM and implemented via the SSES surveillance program. NEPM-QA-1011 and NEPM-QA-1012 provide information which is redundant with the ODCM and the surveillance program and thus both procedures will be deleted.

3. Added references to Section 3.0 and identified the applicable references for parameters and tables in Attachments A through I.

4. Deleted the Approval and Date stamp at the bottom of each page due to no longer required per ODCM-QA-002, Rev. 1.

5. Revised Section 6.0 (resulting in revision to Section 6.1 and deletion of existing Sections 6.2 and 6.3) to reflect the actual dose calculation methodology of Regulatory Guide 1.109. Added Attachment G which is a consolidated description of the dose calculation methodology of Regulatory Guide 1.109. Attachment G provides an efficient method for calculation of offsite dose from liquid effluents and reflects the metholdology utilized by the RETDAS computer program.

6. Revised existing Section 6.4 (renumbered as 6.2) to more accurately reflect and enhance compliance with TRM 3.11.1.3 and to incorporate the capability to perform a liquid effluent dose projection via the methodology utilized by the RETDAS computer program. Renamed Attachments F and G as Attachments H and I.

7. Revised Attachments A, B, and E (renamed as Attachments A, B and C) to list values defined as "Pathway Dose Commitment Factors." The values are derived from standard parameters outlined in Regulatory Guide 1.109 except P-32 (bone) which is derived based on the methodology in Reference 3.17. The derivation of the dose commitment factors is outlined in Attachment G. PPL Calculation EC-ENVR-1055, Rev. 0, Evaluation of Dose

Factors for Liquid and Gaseous Effluent Releases," has been added as a reference which supports the values in Attachments A, B, and C and these values correspond to the values used by the RETDAS program.

8. The following existing sections have been deleted and/or re-named due to changes in the dose calculation methodology and the transition from the LADTAP II program to the RETDAS program: 2.2, 3.10, 3.11, 3.13, 3.14, 6.1, 6.2, 6.3, 6.5, Attachments A-H.

9. Revised potable water dilution factor on Attachment F to correspond with added Reference 3.12.

10. Added Section 2.1.4 to recognize the SSES Sewage Treatment Plant as an Insignificant Effluent Release Pathway.

11. Various sections revised to reflect SSES organizational changes.

TABLE OF CONTENTS

SECTION		PAGE
1.0	PURPOSE	5
2.0	POLICY/DISCUSSION	5
2.1	Applicable Pathways	5
2.2	Effluent Data	5
2.3	Projected Dose	6
2.4	Assignment of Releases to the Reactor Units	6
3.0	REFERENCES	6
4.0	RESPONSIBILITIES	7
4.1	Chemistry Supervisor - SSES	7
5.0	DEFINITIONS	8
6.0	PROCEDURE	8
6.1	Liquid Effluent Dose Calculation	8
6.2	Projected Dose from Liquid Effluent	9
6.3	Waterborne Effluent Dose Calculations Exceeding Twice the TRM Values	10
7.0	RECORDS	10

ATTACHMENTS

ATTACHMENT		PAGE
A	Dose Commitment Factors for Potable Water Pathway	11
B	Dose Commitment Factors for Fish Pathway	19
C	Dose Commitment Factors for Shoreline Pathway	27
D	Radioactive Decay Constants	35
E	Dilution Factors and Transit Times for SSES Effluents to Danville, PA	36
F	Site Specific Information	38
G	Consolidated Dose Calculation	39
H	Maximum Hypothetical Composite Dose Factors	42
I	Maximum Hypothetical Water Ingestion Dose Factors – Infant	48

1.0 PURPOSE

The purpose of this procedure is to provide the methodology and parameters to be used in calculating maximum individual, whole-body and organ doses due to waterborne effluents to ensure compliance with the dose limitations in the Technical Requirements Manual (Sections 3.11.1.2, 3.11.3) and 10CFR20.1302.

This procedure constitutes part of the SSES Offsite Dose Calculation Manual (ODCM) which is a licensing basis document.

2.0 POLICY/DISCUSSION

2.1 Applicable Pathways

2.1.1 The calculations of dose received by the hypothetical maximally exposed individual are based on ingestion of fish and drinking water and exposure on the shoreline. Drinking water is taken from the nearest public drinking water intake location (Danville Water Authority). Shoreline and fish ingestion are associated with the SSES river outfall (edge of initial mixing zone).

2.1.2 Methodology for calculating dose to the maximum hypothetical offsite individual has been developed for composite (fish, drinking water and shoreline exposure) liquid effluent pathways. This methodology incorporates shore width, usage, dilution, and transit parameters specific to the SSES site. Any revision to these parameters should be reviewed against FSAR Table 11.2-15.

2.1.3 Calculated dose contributions from the three waterborne effluent pathways are summed to obtain the total dose to a member of the public from liquid effluent.

2.1.4 Effluent data from the following Insignificant Pathway shall be evaluated for inclusion in the Annual Effluent Release Report; Sewage Treatment Plant.

2.2 Effluent Data

2.2.1 The total number of curies released for each radionuclide during the time period being evaluated is supplied by the SSES radiation monitoring program.

2.2.2 For determination of compliance with SSES Technical Requirements Manual dose limits, effluent totals shall be based only on activity positively detected at the 95% confidence level.

2.3 Projected Dose

2.3.1 The projected quarterly dose contribution from batch releases for which radionuclide concentrations are determined by periodic composite sample analysis, as stated in TR Table 3.11.1.1-1 may be approximated by assuming an average concentration based on the previous monthly (rolling 31-day) or quarterly composite analysis.

2.3.2 The calculated dose contributions from these radionuclides shall be based on the actual composite analysis. The cumulative dose commitment to the total body or any organ for a quarterly or annual analysis shall be based on the summation of isotopic activities and average cooling tower blowdown from all releases occurring during that time period.

2.4 Assignment of Releases to the Reactor Units

2.4.1 For determination of compliance with SSES radioactive effluent dose limits which are on a "per reactor unit" basis:

a. Waterborne effluents shall be equally divided between Unit 1 and Unit 2 release totals. (Ref. 3.11)

3.0 REFERENCES

3.1 TR Table 3.11.1.1-1, Radioactive Liquid Waste Sampling and Analysis Program.

3.2 TR 3.11.1.2 [Liquid Effluent] Dose

3.3 TR 3.11.3 Total Dose

3.4 10CFR20.1302, Compliance with the Dose Limits for Individual Members of the Public

3.5 10 CFR 20 Appendix B, Annual Limits on Intake (ALIs) and Derived Air Concentrations (DACs) of Radionuclides for Occupational Exposure; Effluent Concentrations; Concentrations for Release to Sewerage.

3.6 10CFR50 Appendix I, Numerical Guides for Design Objectives and Limiting Conditions for Operation to Meet the Criterion "As Low as is Reasonably Achievable" for Radioactive Material in Light-water Cooled Nuclear Power Reactor Effluents.

3.7 40CFR190, Environmental radiation protection standards for nuclear power operations.

3.8 Regulatory Guide 1.109, Rev. 1, October, 1977, Calculation of Annual Doses to Man from Routine Releases of Reactor Effluents for the Purposes of Evaluating Compliance with 10 CFR 50, Appendix I.

3.9 SSES License Action Request 97-002, Clarification of Specifications 3.11.1.2 and 3.11.1.3, 1/20/97.

3.10 FSAR Table 11.2-15, Input Data for Aquatic Dose Calculations.

3.11 NUREG-0133 Preparation of Radiological Effluent Technical Specifications for Nuclear Power Plants, October 1978.

3.12 "Study of Travel Time and Mixing Characteristics for the Susquehanna River Below the Susquehanna Steam Electric Station," The Sutron Corporation, Sutron Report No. SCR85-0007, November, 1985.

3.13 Kocher, D. C., "Radioactive Decay Tables," DOE/TIC Report 11026, Oak Ridge National Laboratory, Oak Ridge, TN, 1981.

3.14 PPL Calculation EC-RADN-1041, Rev. 5, "SSES 'Expected' Liquid and Gaseous Effluent Aquatic Doses and Atmospheric Doses – NWC/CFS/HWC."

3.15 PPL Calculation EC-ENVR-1055, Rev. 0, "Evaluation of Dose Factors for Liquid and Gaseous Effluent Releases."

3.16 PPL Calculation EC-ENVR-0501 (OT-93-RKB-019), Liquid Dose Factor Calculations – Liquid Pathway Dose Factors for SSES ODCM.

3.17 "Importance of P-32 in Nuclear Reactor Liquid Effluents," Edward F. Branagan, Jr., Charles R. Nichols and Charles A. Willis, USNRC June 1982.

3.18 PPL AR No. 401298 "Deletion of LRW Composite Sample P-32 Analysis," May 2002.

4.0 RESPONSIBILITIES

PCAF

4.1 Chemistry Supervisor - SSES

4.1.1 Ensures adequacy and correctness of methodology used in calculating doses resulting from waterborne effluents as necessary for fulfillment or Technical Requirement Surveillances (Sections 3.11.1.2.1 and 3.11.3.1).

4.1.2 Ensures dose calculations necessary for fulfillment of Technical Requirement Surveillances (Sections 3.11.1.2.1 and 3.11.3.1) are performed.

4.1.3 Ensures methodology and parameters to be used in calculating doses resulting from waterborne effluents are developed to ensure compliance with the dose limitations in the Technical Requirements Manual.

5.0 DEFINITIONS

None.

6.0 PROCEDURE

6.1 Liquid Effluent Dose Calculation

The dose due to radionuclides released in liquid effluent to unrestricted areas is calculated via equations 1, 2 and 3 as outlined below. The equations incorporate the methodology as described in Regulatory Guide 1.109. A consolidated version of the Regulatory Guide 1.109 dose calculation methodology is outlined in Attachment G.

$$R_{apj} = 1119 \frac{M_p U_{ap}}{F} \sum_i Q_i D_{aipj} e^{-\lambda_i t_p}$$ Potable Water (1)

$$R_{apj} = 1119 \frac{M_p U_{ap}}{F} \sum_i Q_i B_{ip} D_{aipj} e^{-\lambda_i t_p}$$ Fish (2)

$$R_{apj} = 1119 \frac{M_p U_{ap} W}{F} \sum_i Q_i T_i D_{aipj} [e^{-\lambda_i t_p}][1 - e^{-\lambda_i t_b}]$$ Shoreline (3)

Where:

B_{ip} = Equilibrium bioaccumulation factor for nuclide i in pathway p, expressed as the ratio of the concentration in biota (pCi/kg) to the radionuclide concentration in water (pCi/liter), i.e., liter/kg (Ref. 3.8 Table A-1)

D_{aipj} = Dose factor specific to a given age group a, radionuclide i, pathway p, and organ j, which can be used to calculate the radiation dose from ingestion of a radionuclide or from standing on contaminated ground (Ref. 3.8 Table E-6, E-11 through E-14) (mrem/pCi ingested or mrem/hr per pCi/m2)

F = Flow rate in the liquid effluent (cooling tower blowdown flow in $ft.^3$/sec)

M_p = Mixing ratio at the point of withdrawal of drinking water or point of harvest of fish
= Reciprocal of the dilution factor DFp (Attachment E)
= 1/DFp

Q_i = Release rate of nuclide i (Ci/yr)

R_{apj} = Total annual dose to organ j of individuals of age group a from all radionuclides in the pathway p (mrem/yr)

t_p = Total time elapsed between release of the nuclides and ingestion of food or water (Attachment F) (hr)

U_{ap} = Usage factor that specifies the intake rate or exposure rate for an individual of age group a associated with pathway p (Attachment F) (kg/yr, l/yr or hr/yr)

λ_i = Radioactive decay constant of nuclide i (Attachment D) (hr^{-1})

1119 = Factor to convert from (Ci/yr)/(ft^3/sec) to pCi/liter (Reg Guide 1.109 lists 1100 which is 1119 rounded to nearest hundreth)

111,900 = Factor to convert from (Ci/yr)/(ft^3/sec) to pCi/liter and to account for proportionality constant (100 liter/m^2-day) used in sediment radioactivity model (Reg. Guide 1.109 lists 110,000 which is 111,900 rounded to the nearest ten thousandth)

W = shoreline width factor (Attachment F) (dimensionless)

t_b = Period of time shoreline is exposed to contaminated water (Attachment F) (hr)

T_i = Radioactive half-life of nuclide i (days).

It should be noted that although the same notation is used for all three pathways, M_p, U_{ap}, and t_p have different values, because the assumed point of withdrawal of drinking water is not the same as the assumed point of fish harvest or shoreline exposure.

6.2 Projected Dose from Liquid Effluent

6.2.1 Doses from liquid effluents released to unrestricted areas are projected at least every 31 days as required by TRM 3.11.1.3. These projections are made by averaging the doses from previous operating history (normally the previous three months) which is indicative of expected future operations. The dose projection from Liquid Effluents Released to Unrestricted Areas can also be performed by the following equation:

$$R_{apj} = \sum_i [K_{aipj} * C_i * V * k] \qquad \text{Eq. 4}$$

Where:

R_{apj} = Total projected dose during period to organ j from fish, water ingestion and shoreline exposure to individuals of age group a from all radionuclides in pathway p (mrem);

K_{aipj} = Composite dose conversion factor (adult, teen, child) or water ingestion dose factor (infant) to organ j of individuals to age group a from radionuclide i in pathway p (mrem/Ci released: Attachment H for Maximum Hypothetical Composite Dose Factors, Attachment I for Maximum Hypothetical Water Ingestion Dose Factors);

C_i = Average concentration of radionuclide i in undiluted liquid effluent during batch release from radwaste (Ci/ml).

V = Total undiluted batch volume released from radwaste (gallons).

k = Conversion factor (3.785E3 ml/gallon).

6.3 Waterborne Effluent Dose Calculations Exceeding Twice the TRM Values

6.3.1 When the results of waterborne dose calculations exceed twice the value of the TR 3.11.1.2.a or 3.11.1.2.b), calculations shall be made including the direct radiation contribution to determine if the limits of TR 3.11.3 have been exceeded. If the limits of TR 3.11.3 have been exceeded, a special report shall be prepared and submitted to the NRC within 30 days addressing the actions specified in TR 3.11.3.

7.0 RECORDS

None.

DOSE COMMITMENT FACTORS
FOR THE POTABLE WATER PATHWAY
(Ref. 3.15)

Release Type: Liquid
Units: (mrem/hr)/(μCi/ml))
Age Group: ADULT
Pathway: Potable Water (PWtr)

Nuclide	Bone	Liver	Thyroid	Kidney	Lung	GI-Lli	Skin	TB
H-3	0.00e+00	8.74e+00	8.74e+00	8.74e+00	8.74e+00	8.74e+00	0.00e+00	8.74e+00
C-14	2.36e+02	4.73e+01	4.73e+01	4.73e+01	4.73e+01	4.73e+01	0.00e+00	4.73e+01
NA-24	1.41e+02	1.41e+02	1.41e+02	1.41e+02	1.41e+02	1.41e+02	0.00e+00	1.41e+02
(1) P-32	2.50e+03	9.99e+02	0.00e+00	0.00e+00	0.00e+00	1.81e+03	0.00e+00	6.21e+02
CR-51	0.00e+00	0.00e+00	1.32e-01	4.88e-02	2.94e-01	5.57e+01	0.00e+00	2.21e-01
MN-54	0.00e+00	3.80e+02	0.00e+00	1.13e+02	0.00e+00	1.17e+03	0.00e+00	7.26e+01
MN-56	0.00e+00	9.57e+00	0.00e+00	1.22e+01	0.00e+00	3.05e+02	0.00e+00	1.70e+00
FE-55	2.29e+02	1.58e+02	0.00e+00	0.00e+00	8.82e+01	9.07e+01	0.00e+00	3.69e+01
FE-59	3.61e+02	8.49e+02	0.00e+00	0.00e+00	2.37e+02	2.83e+03	0.00e+00	3.25e+02
CO-58	0.00e+00	6.20e+01	0.00e+00	0.00e+00	0.00e+00	1.26e+03	0.00e+00	1.39e+02
CO-60	0.00e+00	1.78e+02	0.00e+00	0.00e+00	0.00e+00	3.35e+03	0.00e+00	3.93e+02
NI-63	1.08e+04	7.50e+02	0.00e+00	0.00e+00	0.00e+00	1.56e+02	0.00e+00	3.63e+02
NI-65	4.39e+01	5.71e+00	0.00e+00	0.00e+00	0.00e+00	1.45e+02	0.00e+00	2.60e+00
CU-64	0.00e+00	6.93e+00	0.00e+00	1.75e+01	0.00e+00	5.91e+02	0.00e+00	3.25e+00
ZN-65	4.03e+02	1.28e+03	0.00e+00	8.57e+02	0.00e+00	8.07e+02	0.00e+00	5.79e+02
ZN-69	8.57e-01	1.64e+00	0.00e+00	1.07e+00	0.00e+00	2.46e-01	0.00e+00	1.14e-01
BR-83	0.00e+00	0.00e+00	0.00e+00	0.00e+00	0.00e+00	4.82e+00	0.00e+00	3.35e+00
BR-84	0.00e+00	0.00e+00	0.00e+00	0.00e+00	0.00e+00	3.40e-05	0.00e+00	4.34e+00
BR-85	0.00e+00	0.00e+00	0.00e+00	0.00e+00	0.00e+00	0.00e+00	0.00e+00	1.78e-01
RB-86	0.00e+00	1.76e+03	0.00e+00	0.00e+00	0.00e+00	3.46e+02	0.00e+00	8.18e+02
RB-88	0.00e+00	5.03e+00	0.00e+00	0.00e+00	0.00e+00	6.96e-11	0.00e+00	2.67e+00
RB-89	0.00e+00	3.34e+00	0.00e+00	0.00e+00	0.00e+00	1.94e-13	0.00e+00	2.35e+00
SR-89	2.56e+04	0.00e+00	0.00e+00	0.00e+00	0.00e+00	4.11e+03	0.00e+00	7.36e+02
SR-90	6.31e+05	0.00e+00	0.00e+00	0.00e+00	0.00e+00	1.82e+04	0.00e+00	1.55e+05
SR-91	4.72e+02	0.00e+00	0.00e+00	0.00e+00	0.00e+00	2.25e+03	0.00e+00	1.91e+01
SR-92	1.79e+02	0.00e+00	0.00e+00	0.00e+00	0.00e+00	3.55e+03	0.00e+00	7.74e+00
Y-90	8.01e-01	0.00e+00	0.00e+00	0.00e+00	0.00e+00	8.49e+03	0.00e+00	2.15e-02
Y-91	1.17e+01	0.00e+00	0.00e+00	0.00e+00	0.00e+00	6.46e+03	0.00e+00	3.14e-01
Y-91M	7.56e-03	0.00e+00	0.00e+00	0.00e+00	0.00e+00	2.22e-02	0.00e+00	2.93e-04
Y-92	7.03e-02	0.00e+00	0.00e+00	0.00e+00	0.00e+00	1.23e+03	0.00e+00	2.06e-03
Y-93	2.23e-01	0.00e+00	0.00e+00	0.00e+00	0.00e+00	7.07e+03	0.00e+00	6.16e-03
ZR-95	2.53e+00	8.11e-01	0.00e+00	1.27e+00	0.00e+00	2.57e+03	0.00e+00	5.49e-01
ZR-97	1.40e-01	2.82e-02	0.00e+00	4.26e-02	0.00e+00	8.74e+03	0.00e+00	1.29e-02
NB-95	5.18e-01	2.88e-01	0.00e+00	2.85e-01	0.00e+00	1.75e+03	0.00e+00	1.55e-01
MO-99	0.00e+00	3.59e+02	0.00e+00	8.12e+02	0.00e+00	8.31e+02	0.00e+00	6.82e+01
TC-99M	2.06e-02	5.81e-02	0.00e+00	8.82e-01	2.85e-02	3.44e+01	0.00e+00	7.40e-01
TC-101	2.11e-02	3.05e-02	0.00e+00	5.48e-01	1.56e-02	9.15e-14	0.00e+00	2.99e-01
RU-103	1.54e+01	0.00e+00	0.00e+00	5.88e+01	0.00e+00	1.80e+03	0.00e+00	6.63e+00

(1) Ingestion dose factor (for bone) used in calculation of Dose Commitment Factor for P-32 derived in accordance with information supplied in Reference 3.17. The teen and child bone dose ingestion dose factors were derived by the ratio of the adult bone ingestion dose factors in Reg. Guide 1.109 and "The Importance of P-32 in Nuclear Reactor Liquid Effluents," Branagan, E. F., Nichols, C.R., and Willis, C. A., USNRC, 6/82 (Ref 3.17).

DOSE COMMITMENT FACTORS
FOR THE POTABLE WATER PATHWAY
(Ref. 3.15)

Release Type: Liquid
Units: ((mrem/hr)/(μCi/ml))
Age Group: ADULT
Pathway: Potable Water (PWtr)

Nuclide	Bone	Liver	Thyroid	Kidney	Lung	GI-Lli	Skin	TB
RU-105	1.28e+00	0.00e+00	0.00e+00	1.66e+01	0.00e+00	7.84e+02	0.00e+00	5.06e-01
RU-106	2.29e+02	0.00e+00	0.00e+00	4.42e+02	0.00e+00	1.48e+04	0.00e+00	2.90e+01
AG-110M	1.33e+01	1.23e+01	0.00e+00	2.42e+01	0.00e+00	5.03e+03	0.00e+00	7.32e+00
TE-125M	2.23e+02	8.08e+01	6.71e+01	9.07e+02	0.00e+00	8.90e+02	0.00e+00	2.99e+01
TE-127	9.15e+00	3.29e+00	6.78e+00	3.73e+01	0.00e+00	7.22e+02	0.00e+00	1.98e+00
TE-127M	5.63e+02	2.01e+02	1.44e+02	2.29e+03	0.00e+00	1.89e+03	0.00e+00	6.87e+01
TE-129	2.61e+00	9.82e-01	2.01e+00	1.10e+01	0.00e+00	1.97e+00	0.00e+00	6.37e-01
TE-129M	9.57e+02	3.57e+02	3.29e+02	3.99e+03	0.00e+00	4.82e+03	0.00e+00	1.51e+02
TE-131	1.64e+00	6.85e-01	1.35e+00	7.18e+00	0.00e+00	2.32e-01	0.00e+00	5.18e-01
TE-131M	1.44e+02	7.04e+01	1.12e+02	7.13e+02	0.00e+00	6.99e+03	0.00e+00	5.87e+01
TE-132	2.10e+02	1.36e+02	1.50e+02	1.31e+03	0.00e+00	6.42e+03	0.00e+00	1.27e+02
I-130	6.29e+01	1.86e+02	1.57e+04	2.90e+02	0.00e+00	1.60e+02	0.00e+00	7.32e+01
I-131	3.46e+02	4.95e+02	1.62e+05	8.49e+02	0.00e+00	1.31e+02	0.00e+00	2.84e+02
I-132	1.69e+01	4.52e+01	1.58e+03	7.20e+01	0.00e+00	8.49e+00	0.00e+00	1.58e+01
I-133	1.18e+02	2.06e+02	3.02e+04	3.59e+02	0.00e+00	1.85e+02	0.00e+00	6.27e+01
I-134	8.82e+00	2.40e+01	4.15e+02	3.81e+01	0.00e+00	2.09e-02	0.00e+00	8.57e+00
I-135	3.69e+01	9.65e+01	6.37e+03	1.55e+02	0.00e+00	1.09e+02	0.00e+00	3.56e+01
CS-134	5.18e+03	1.23e+04	0.00e+00	3.99e+03	1.32e+03	2.16e+02	0.00e+00	1.01e+04
CS-136	5.42e+02	2.14e+03	0.00e+00	1.19e+03	1.63e+02	2.43e+02	0.00e+00	1.54e+03
CS-137	6.63e+03	9.07e+03	0.00e+00	3.08e+03	1.02e+03	1.76e+02	0.00e+00	5.94e+03
CS-138	4.59e+00	9.07e+00	0.00e+00	6.67e+00	6.58e-01	3.87e-05	0.00e+00	4.49e+00
BA-139	8.07e+00	5.75e-03	0.00e+00	5.38e-03	3.26e-03	1.43e+01	0.00e+00	2.36e-01
BA-140	1.69e+03	2.12e+00	0.00e+00	7.22e-01	1.22e+00	3.48e+03	0.00e+00	1.11e+02
BA-141	3.92e+00	2.96e-03	0.00e+00	2.75e-03	1.68e-03	1.85e-09	0.00e+00	1.32e-01
BA-142	1.77e+00	1.82e-03	0.00e+00	1.54e-03	1.03e-03	2.50e-18	0.00e+00	1.12e-01
LA-140	2.08e-01	1.05e-01	0.00e+00	0.00e+00	0.00e+00	7.70e+03	0.00e+00	2.77e-02
LA-142	1.07e-02	4.84e-03	0.00e+00	0.00e+00	0.00e+00	3.54e+01	0.00e+00	1.21e-03
CE-141	7.79e-01	5.27e-01	0.00e+00	2.45e-01	0.00e+00	2.01e+03	0.00e+00	5.98e-02
CE-143	1.37e-01	1.02e+02	0.00e+00	4.47e-02	0.00e+00	3.79e+03	0.00e+00	1.12e-02
CE-144	4.06e+01	1.70e+01	0.00e+00	1.01e+01	0.00e+00	1.37e+04	0.00e+00	2.18e+00
PR-143	7.66e-01	3.07e-01	0.00e+00	1.77e-01	0.00e+00	3.35e+03	0.00e+00	3.79e-02
PR-144	2.50e-03	1.04e-03	0.00e+00	5.87e-04	0.00e+00	3.60e-10	0.00e+00	1.27e-04
ND-147	5.23e-01	6.05e-01	0.00e+00	3.54e-01	0.00e+00	2.90e+03	0.00e+00	3.62e-02
W-187	8.57e+00	7.17e+00	0.00e+00	0.00e+00	0.00e+00	2.35e+03	0.00e+00	2.50e+00
NP-239	9.90e-02	9.74e-03	0.00e+00	3.04e-02	0.00e+00	2.00e+03	0.00e+00	5.37e-03

DOSE COMMITMENT FACTORS
FOR THE POTABLE WATER PATHWAY
(Ref. 3.15)

Release Type: Liquid
Units: ((mrem/hr)/(μCi/ml))
Age Group: TEEN
Pathway: Potable Water (PWtr)

Nuclide	Bone	Liver	Thyroid	Kidney	Lung	GI-Lli	Skin	TB
H-3	0.00e+00	6.16e+00	6.16e+00	6.16e+00	6.16e+00	6.16e+00	0.00e+00	6.16e+00
C-14	2.36e+02	4.72e+01	4.72e+01	4.72e+01	4.72e+01	4.72e+01	0.00e+00	4.72e+01
NA-24	1.34e+02	1.34e+02	1.34e+02	1.34e+02	1.34e+02	1.34e+02	0.00e+00	1.34e+02
(1) P-32	2.50e+03	9.94e+02	0.00e+00	0.00e+00	0.00e+00	1.35e+03	0.00e+00	6.22e+02
CR-51	0.00e+00	0.00e+00	1.16e-01	4.59e-02	2.99e-01	3.52e+01	0.00e+00	2.09e-01
MN-54	0.00e+00	3.43e+02	0.00e+00	1.02e+02	0.00e+00	7.03e+02	0.00e+00	6.80e+01
MN-56	0.00e+00	9.19e+00	0.00e+00	1.16e+01	0.00e+00	6.05e+02	0.00e+00	1.63e+00
FE-55	2.20e+02	1.56e+02	0.00e+00	0.00e+00	9.88e+01	6.74e+01	0.00e+00	3.63e+01
FE-59	3.41e+02	7.97e+02	0.00e+00	0.00e+00	2.51e+02	1.88e+03	0.00e+00	3.08e+02
CO-58	0.00e+00	5.65e+01	0.00e+00	0.00e+00	0.00e+00	7.79e+02	0.00e+00	1.30e+02
CO-60	0.00e+00	1.63e+02	0.00e+00	0.00e+00	0.00e+00	2.13e+03	0.00e+00	3.68e+02
NI-63	1.03e+04	7.27e+02	0.00e+00	0.00e+00	0.00e+00	1.16e+02	0.00e+00	3.49e+02
NI-65	4.35e+01	5.56e+00	0.00e+00	0.00e+00	0.00e+00	3.02e+02	0.00e+00	2.53e+00
CU-64	0.00e+00	6.69e+00	0.00e+00	1.69e+01	0.00e+00	5.19e+02	0.00e+00	3.15e+00
ZN-65	3.35e+02	1.16e+03	0.00e+00	7.44e+02	0.00e+00	4.92e+02	0.00e+00	5.42e+02
ZN-69	8.55e-01	1.63e+00	0.00e+00	1.06e+00	0.00e+00	3.00e+00	0.00e+00	1.14e-01
BR-83	0.00e+00	0.00e+00	0.00e+00	0.00e+00	0.00e+00	0.00e+00	0.00e+00	3.34e+00
BR-84	0.00e+00	0.00e+00	0.00e+00	0.00e+00	0.00e+00	0.00e+00	0.00e+00	4.20e+00
BR-85	0.00e+00	0.00e+00	0.00e+00	0.00e+00	0.00e+00	0.00e+00	0.00e+00	1.77e-01
RB-86	0.00e+00	1.73e+03	0.00e+00	0.00e+00	0.00e+00	2.56e+02	0.00e+00	8.14e+02
RB-88	0.00e+00	4.95e+00	0.00e+00	0.00e+00	0.00e+00	4.24e-07	0.00e+00	2.64e+00
RB-89	0.00e+00	3.20e+00	0.00e+00	0.00e+00	0.00e+00	4.90e-09	0.00e+00	2.26e+00
SR-89	2.56e+04	0.00e+00	0.00e+00	0.00e+00	0.00e+00	3.05e+03	0.00e+00	7.33e+02
SR-90	4.83e+05	0.00e+00	0.00e+00	0.00e+00	0.00e+00	1.35e+04	0.00e+00	1.19e+05
SR-91	4.69e+02	0.00e+00	0.00e+00	0.00e+00	0.00e+00	2.13e+03	0.00e+00	1.87e+01
SR-92	1.77e+02	0.00e+00	0.00e+00	0.00e+00	0.00e+00	4.52e+03	0.00e+00	7.56e+00
Y-90	7.97e-01	0.00e+00	0.00e+00	0.00e+00	0.00e+00	6.57e+03	0.00e+00	2.15e-02
Y-91	1.17e+01	0.00e+00	0.00e+00	0.00e+00	0.00e+00	4.79e+03	0.00e+00	3.13e-01
Y-91M	7.50e-03	0.00e+00	0.00e+00	0.00e+00	0.00e+00	3.54e-01	0.00e+00	2.87e-04
Y-92	7.03e-02	0.00e+00	0.00e+00	0.00e+00	0.00e+00	1.93e+03	0.00e+00	2.03e-03
Y-93	2.23e-01	0.00e+00	0.00e+00	0.00e+00	0.00e+00	6.80e+03	0.00e+00	6.10e-03
ZR-95	2.40e+00	7.56e-01	0.00e+00	1.11e+00	0.00e+00	1.74e+03	0.00e+00	5.20e-01
ZR-97	1.38e-01	2.73e-02	0.00e+00	4.13e-02	0.00e+00	7.38e+03	0.00e+00	1.26e-02
NB-95	4.78e-01	2.65e-01	0.00e+00	2.57e-01	0.00e+00	1.13e+03	0.00e+00	1.46e-01
MO-99	0.00e+00	3.51e+02	0.00e+00	8.02e+02	0.00e+00	6.28e+02	0.00e+00	6.69e+01
TC-99M	1.93e-02	5.38e-02	0.00e+00	8.02e-01	2.99e-02	3.53e+01	0.00e+00	6.98e-01
TC-101	2.09e-02	2.98e-02	0.00e+00	5.38e-01	1.81e-02	5.09e-09	0.00e+00	2.92e-01
RU-103	1.48e+01	0.00e+00	0.00e+00	5.23e+01	0.00e+00	1.24e+03	0.00e+00	6.34e+00

(1) Ingestion dose factor (for bone) used in calculation of Dose Commitment Factor for P-32 derived in accordance with information supplied in Reference 3.17. The teen and child bone dose ingestion dose factors were derived by the ratio of the adult bone ingestion dose factors in Reg. Guide 1.109 and "The Importance of P-32 in Nuclear Reactor Liquid Effluents," Branagan, E. F., Nichols, C.R., and Willis, C. A., USNRC, 6/82 (Ref 3.17).

DOSE COMMITMENT FACTORS
FOR THE POTABLE WATER PATHWAY
(Ref. 3.15)

Release Type: Liquid
Units: ((mrem/hr)/(µCi/ml))
Age Group: TEEN
Pathway: Potable Water (PWtr)

Nuclide	Bone	Liver	Thyroid	Kidney	Lung	GI-Lli	Skin	TB
RU-105	1.27e+00	0.00e+00	0.00e+00	1.60e+01	0.00e+00	1.02e+03	0.00e+00	4.92e-01
RU-106	2.28e+02	0.00e+00	0.00e+00	4.40e+02	0.00e+00	1.09e+04	0.00e+00	2.87e+01
AG-110M	1.19e+01	1.13e+01	0.00e+00	2.15e+01	0.00e+00	3.17e+03	0.00e+00	6.86e+00
TE-125M	2.23e+02	8.02e+01	6.22e+01	0.00e+00	0.00e+00	6.57e+02	0.00e+00	2.98e+01
TE-127	9.19e+00	3.26e+00	6.34e+00	3.72e+01	0.00e+00	7.09e+02	0.00e+00	1.98e+00
TE-127M	5.62e+02	1.99e+02	1.34e+02	2.28e+03	0.00e+00	1.40e+03	0.00e+00	6.69e+01
TE-129	2.60e+00	9.71e-01	1.86e+00	1.09e+01	0.00e+00	1.42e+01	0.00e+00	6.34e-01
TE-129M	9.48e+02	3.52e+02	3.06e+02	3.97e+03	0.00e+00	3.56e+03	0.00e+00	1.50e+02
TE-131	1.62e+00	6.69e-01	1.25e+00	7.09e+00	0.00e+00	1.33e-01	0.00e+00	5.07e-01
TE-131M	1.42e+02	6.80e+01	1.02e+02	7.09e+02	0.00e+00	5.46e+03	0.00e+00	5.67e+01
TE-132	2.03e+02	1.28e+02	1.35e+02	1.23e+03	0.00e+00	4.07e+03	0.00e+00	1.21e+02
I-130	5.99e+01	1.73e+02	1.41e+04	2.67e+02	0.00e+00	1.33e+02	0.00e+00	6.92e+01
I-131	3.40e+02	4.76e+02	1.39e+05	8.20e+02	0.00e+00	9.42e+01	0.00e+00	2.56e+02
I-132	1.62e+01	4.24e+01	1.43e+03	6.69e+01	0.00e+00	1.85e+01	0.00e+00	1.52e+01
I-133	1.17e+02	1.98e+02	2.77e+04	3.48e+02	0.00e+00	1.50e+02	0.00e+00	6.05e+01
I-134	8.49e+00	2.25e+01	3.75e+02	3.55e+01	0.00e+00	2.97e-01	0.00e+00	8.08e+00
I-135	3.55e+01	9.13e+01	5.87e+03	1.44e+02	0.00e+00	1.01e+02	0.00e+00	3.38e+01
CS-134	4.87e+03	1.15e+04	0.00e+00	3.64e+03	1.39e+03	1.42e+02	0.00e+00	5.31e+03
CS-136	4.99e+02	1.97e+03	0.00e+00	1.07e+03	1.69e+02	1.58e+02	0.00e+00	1.32e+03
CS-137	6.51e+03	8.66e+03	0.00e+00	2.95e+03	1.15e+03	1.23e+02	0.00e+00	3.02e+03
CS-138	4.51e+00	8.66e+00	0.00e+00	6.40e+00	7.44e-01	3.93e-03	0.00e+00	4.33e+00
BA-139	8.08e+00	5.69e-03	0.00e+00	5.36e-03	3.92e-03	7.21e+01	0.00e+00	2.35e-01
BA-140	1.65e+03	2.02e+00	0.00e+00	6.86e-01	1.36e+00	2.55e+03	0.00e+00	1.06e+02
BA-141	3.90e+00	2.91e-03	0.00e+00	2.70e-03	1.99e-03	8.31e-06	0.00e+00	1.30e-01
BA-142	1.74e+00	1.74e-03	0.00e+00	1.47e-03	1.16e-03	5.34e-12	0.00e+00	1.07e-01
LA-140	2.02e-01	9.94e-02	0.00e+00	0.00e+00	0.00e+00	5.71e+03	0.00e+00	2.65e-02
LA-142	1.04e-02	4.62e-03	0.00e+00	0.00e+00	0.00e+00	1.41e+02	0.00e+00	1.15e-03
CE-141	7.73e-01	5.16e-01	0.00e+00	2.43e-01	0.00e+00	1.48e+03	0.00e+00	5.93e-02
CE-143	1.37e-01	9.94e+01	0.00e+00	4.46e-02	0.00e+00	2.99e+03	0.00e+00	1.11e-02
CE-144	4.05e+01	1.67e+01	0.00e+00	1.00e+01	0.00e+00	1.02e+04	0.00e+00	2.17e+00
PR-143	7.62e-01	3.04e-01	0.00e+00	1.77e-01	0.00e+00	2.51e+03	0.00e+00	3.79e-02
PR-144	2.50e-03	1.02e-03	0.00e+00	5.87e-04	0.00e+00	2.76e-06	0.00e+00	1.27e-04
ND-147	5.45e-01	5.93e-01	0.00e+00	3.48e-01	0.00e+00	2.14e+03	0.00e+00	3.55e-02
W-187	8.49e+00	6.92e+00	0.00e+00	0.00e+00	0.00e+00	1.87e+03	0.00e+00	2.42e+00
NP-239	1.02e-01	9.65e-03	0.00e+00	3.03e-02	0.00e+00	1.55e+03	0.00e+00	5.36e-03

DOSE COMMITMENT FACTORS
FOR THE POTABLE WATER PATHWAY
(Ref. 3.15)

Release Type: Liquid
Units: ((mrem/hr)/(μCi/ml))
Age Group: CHILD
Pathway: Potable Water (PWtr)

Nuclide	Bone	Liver	Thyroid	Kidney	Lung	GI-Lli	Skin	TB
H-3	0.00e+00	1.18e+01	1.18e+01	1.18e+01	1.18e+01	1.18e+01	0.00e+00	1.18e+01
C-14	7.03e+02	1.41e+02	1.41e+02	1.41e+02	1.41e+02	1.41e+02	0.00e+00	1.41e+02
NA-24	3.37e+02	3.37e+02	3.37e+02	3.37e+02	3.37e+02	3.37e+02	0.00e+00	3.37e+02
(1) P-32	7.44e+03	2.24e+03	0.00e+00	0.00e+00	0.00e+00	1.33e+03	0.00e+00	1.85e+03
CR-51	0.00e+00	0.00e+00	2.87e-01	7.85e-02	5.24e-01	2.74e+01	0.00e+00	5.17e-01
MN-54	0.00e+00	6.22e+02	0.00e+00	1.74e+02	0.00e+00	5.22e+02	0.00e+00	1.66e+02
MN-56	0.00e+00	1.94e+01	0.00e+00	2.35e+01	0.00e+00	2.81e+03	0.00e+00	4.38e+00
FE-55	6.69e+02	3.55e+02	0.00e+00	0.00e+00	2.01e+02	6.57e+01	0.00e+00	1.10e+02
FE-59	9.59e+02	1.55e+03	0.00e+00	0.00e+00	4.50e+02	1.62e+03	0.00e+00	7.73e+02
CO-58	0.00e+00	1.05e+02	0.00e+00	0.00e+00	0.00e+00	6.10e+02	0.00e+00	3.20e+02
CO-60	0.00e+00	3.08e+02	0.00e+00	0.00e+00	0.00e+00	1.70e+03	0.00e+00	9.07e+02
NI-63	3.13e+04	1.67e+03	0.00e+00	0.00e+00	0.00e+00	1.13e+02	0.00e+00	1.06e+03
NI-65	1.29e+02	1.22e+01	0.00e+00	0.00e+00	0.00e+00	1.49e+03	0.00e+00	7.09e+00
CU-64	0.00e+00	1.42e+01	0.00e+00	3.44e+01	0.00e+00	6.69e+02	0.00e+00	8.60e+00
ZN-65	7.97e+02	2.12e+03	0.00e+00	1.34e+03	0.00e+00	3.73e+02	0.00e+00	1.32e+03
ZN-69	2.55e+00	3.68e+00	0.00e+00	2.23e+00	0.00e+00	2.32e+02	0.00e+00	3.40e-01
BR-83	0.00e+00	0.00e+00	0.00e+00	0.00e+00	0.00e+00	0.00e+00	0.00e+00	9.94e+00
BR-84	0.00e+00	0.00e+00	0.00e+00	0.00e+00	0.00e+00	0.00e+00	0.00e+00	1.15e+01
BR-85	0.00e+00	0.00e+00	0.00e+00	0.00e+00	0.00e+00	0.00e+00	0.00e+00	5.30e-01
RB-86	0.00e+00	3.90e+03	0.00e+00	0.00e+00	0.00e+00	2.51e+02	0.00e+00	2.40e+03
RB-88	0.00e+00	1.10e+01	0.00e+00	0.00e+00	0.00e+00	5.42e-01	0.00e+00	7.67e+00
RB-89	0.00e+00	6.80e+00	0.00e+00	0.00e+00	0.00e+00	5.93e-02	0.00e+00	6.05e+00
SR-89	7.67e+04	0.00e+00	0.00e+00	0.00e+00	0.00e+00	2.97e+03	0.00e+00	2.19e+03
SR-90	9.88e+05	0.00e+00	0.00e+00	0.00e+00	0.00e+00	1.33e+04	0.00e+00	2.51e+05
SR-91	1.40e+03	0.00e+00	0.00e+00	0.00e+00	0.00e+00	3.08e+03	0.00e+00	5.27e+01
SR-92	5.25e+02	0.00e+00	0.00e+00	0.00e+00	0.00e+00	9.94e+03	0.00e+00	2.10e+01
Y-90	2.39e+00	0.00e+00	0.00e+00	0.00e+00	0.00e+00	6.80e+03	0.00e+00	6.40e-02
Y-91	3.50e+01	0.00e+00	0.00e+00	0.00e+00	0.00e+00	4.66e+03	0.00e+00	9.36e-01
Y-91M	2.22e-02	0.00e+00	0.00e+00	0.00e+00	0.00e+00	4.35e+01	0.00e+00	8.08e-04
Y-92	2.09e-01	0.00e+00	0.00e+00	0.00e+00	0.00e+00	6.05e+03	0.00e+00	5.99e-03
Y-93	6.63e-01	0.00e+00	0.00e+00	0.00e+00	0.00e+00	9.88e+03	0.00e+00	1.82e-02
ZR-95	6.74e+00	1.48e+00	0.00e+00	2.12e+00	0.00e+00	1.55e+03	0.00e+00	1.32e+00
ZR-97	4.06e-01	5.87e-02	0.00e+00	8.43e-02	0.00e+00	8.90e+03	0.00e+00	3.47e-02
NB-95	1.31e+00	5.09e-01	0.00e+00	4.78e-01	0.00e+00	9.42e+02	0.00e+00	3.64e-01
MO-99	0.00e+00	7.73e+02	0.00e+00	1.65e+03	0.00e+00	6.40e+02	0.00e+00	1.91e+02
TC-99M	5.37e-02	1.05e-01	0.00e+00	1.53e+00	5.34e-02	5.99e+01	0.00e+00	1.74e+00
TC-101	6.22e-02	6.51e-02	0.00e+00	1.11e+00	3.44e-02	2.07e-01	0.00e+00	8.26e-01
RU-103	4.25e+01	0.00e+00	0.00e+00	1.07e+02	0.00e+00	1.10e+03	0.00e+00	1.63e+01

(1) Ingestion dose factor (for bone) used in calculation of Dose Commitment Factor for P-32 derived in accordance with information supplied in Reference 3.17. The teen and child bone dose ingestion dose factors were derived by the ratio of the adult bone ingestion dose factors in Reg. Guide 1.109 and "The Importance of P-32 in Nuclear Reactor Liquid Effluents," Branagan, E. F., Nichols, C.R., and Willis, C. A., USNRC, 6/82 (Ref 3.17).

DOSE COMMITMENT FACTORS
FOR THE POTABLE WATER PATHWAY
(Ref. 3.15)

Release Type: Liquid
Units: ((mrem/hr)/(μCi/ml))
Age Group: CHILD
Pathway: Potable Water (PWtr)

Nuclide	Bone	Liver	Thyroid	Kidney	Lung	GI-Lli	Skin	TB
RU-105	3.75e+00	0.00e+00	0.00e+00	3.30e+01	0.00e+00	2.45e+03	0.00e+00	1.36e+00
RU-106	6.80e+02	0.00e+00	0.00e+00	9.19e+02	0.00e+00	1.06e+04	0.00e+00	8.49e+01
AG-110M	3.13e+01	2.12e+01	0.00e+00	3.94e+01	0.00e+00	2.52e+03	0.00e+00	1.69e+01
TE-125M	6.63e+02	1.80e+02	1.86e+02	0.00e+00	0.00e+00	6.40e+02	0.00e+00	8.84e+01
TE-127	2.74e+01	7.38e+00	1.90e+01	7.79e+01	0.00e+00	1.07e+03	0.00e+00	5.87e+00
TE-127M	1.68e+03	4.52e+02	4.02e+02	4.79e+03	0.00e+00	1.36e+03	0.00e+00	1.99e+02
TE-129	7.79e+00	2.17e+00	5.56e+00	2.28e+01	0.00e+00	4.85e+02	0.00e+00	1.85e+00
TE-129M	2.83e+03	7.91e+02	9.13e+02	8.31e+03	0.00e+00	3.45e+03	0.00e+00	4.40e+02
TE-131	4.83e+00	1.47e+00	3.69e+00	1.46e+01	0.00e+00	2.53e+01	0.00e+00	1.44e+00
TE-131M	4.19e+02	1.45e+02	2.98e+02	1.40e+03	0.00e+00	5.87e+03	0.00e+00	1.54e+02
TE-132	5.87e+02	2.60e+02	3.78e+02	2.41e+03	0.00e+00	2.62e+03	0.00e+00	3.14e+02
I-130	1.70e+02	3.43e+02	3.78e+04	5.13e+02	0.00e+00	1.60e+02	0.00e+00	1.77e+02
I-131	1.00e+03	1.01e+03	3.33e+05	1.65e+03	0.00e+00	8.95e+01	0.00e+00	5.72e+02
I-132	4.65e+01	8.55e+01	3.97e+03	1.31e+02	0.00e+00	1.01e+02	0.00e+00	3.93e+01
I-133	3.44e+02	4.26e+02	7.91e+04	7.09e+02	0.00e+00	1.72e+02	0.00e+00	1.61e+02
I-134	2.44e+01	4.52e+01	1.04e+03	6.92e+01	0.00e+00	3.00e+01	0.00e+00	2.08e+01
I-135	1.02e+02	1.83e+02	1.62e+04	2.81e+02	0.00e+00	1.40e+02	0.00e+00	8.66e+01
CS-134	1.36e+04	2.23e+04	0.00e+00	6.92e+03	2.48e+03	1.20e+02	0.00e+00	4.71e+03
CS-136	1.37e+03	3.76e+03	0.00e+00	2.00e+03	2.98e+02	1.32e+02	0.00e+00	2.43e+03
CS-137	1.90e+04	1.82e+04	0.00e+00	5.93e+03	2.13e+03	1.14e+02	0.00e+00	2.69e+03
CS-138	1.33e+01	1.84e+01	0.00e+00	1.30e+01	1.40e+00	8.49e+00	0.00e+00	1.17e+01
BA-139	2.41e+01	1.28e-02	0.00e+00	1.12e-02	7.56e-03	1.39e+03	0.00e+00	6.98e-01
BA-140	4.83e+03	4.23e+00	0.00e+00	1.38e+00	2.52e+00	2.45e+03	0.00e+00	2.82e+02
BA-141	1.16e+01	6.51e-03	0.00e+00	5.63e-03	3.83e-02	6.63e+00	0.00e+00	3.78e-01
BA-142	5.08e+00	3.66e-03	0.00e+00	2.96e-03	2.15e-03	6.63e-02	0.00e+00	2.84e-01
LA-140	5.87e-01	2.05e-01	0.00e+00	0.00e+00	0.00e+00	5.72e+03	0.00e+00	6.92e-02
LA-142	3.05e-02	9.71e-03	0.00e+00	0.00e+00	0.00e+00	1.92e+03	0.00e+00	3.04e-03
CE-141	2.31e+00	1.15e+00	0.00e+00	5.05e-01	0.00e+00	1.44e+03	0.00e+00	1.71e-01
CE-143	4.06e-01	2.20e+02	0.00e+00	9.24e-02	0.00e+00	3.23e+03	0.00e+00	3.19e-02
CE-144	1.21e+02	3.79e+01	0.00e+00	2.10e+01	0.00e+00	9.88e+03	0.00e+00	6.45e+00
PR-143	2.28e+00	6.86e-01	0.00e+00	3.72e-01	0.00e+00	2.47e+03	0.00e+00	1.13e-01
PR-144	7.50e-03	2.32e-03	0.00e+00	1.23e-03	0.00e+00	4.99e+00	0.00e+00	3.77e-04
ND-147	1.62e+00	1.31e+00	0.00e+00	7.21e-01	0.00e+00	2.08e+03	0.00e+00	1.02e-01
W-187	2.49e+01	1.48e+01	0.00e+00	0.00e+00	0.00e+00	2.08e+03	0.00e+00	6.63e+00
NP-239	3.05e-01	2.19e-02	0.00e+00	6.34e-02	0.00e+00	1.62e+03	0.00e+00	1.54e-02

DOSE COMMITMENT FACTORS
FOR THE POTABLE WATER PATHWAY
(Ref. 3.15)

Release Type: Liquid
Units: ((mrem/hr)/(μCi/ml))
Age Group: INFANT
Pathway: Potable Water (PWtr)

Nuclide	Bone	Liver	Thyroid	Kidney	Lung	GI-Lli	Skin	TB
H-3	0.00e+00	1.16e+01	1.16e+01	1.16e+01	1.16e+01	1.16e+01	0.00e+00	1.16e+01
C-14	8.92e+02	1.90e+02	1.90e+02	1.90e+02	1.90e+02	1.90e+02	0.00e+00	1.90e+02
NA-24	3.80e+02	3.80e+02	3.80e+02	3.80e+02	3.80e+02	3.80e+02	0.00e+00	3.80e+02
P-32	6.40e+04	3.76e+03	0.00e+00	0.00e+00	0.00e+00	8.65e+02	0.00e+00	2.48e+03
CR-51	0.00e+00	0.00e+00	3.46e-01	7.56e-02	6.73e-01	1.55e+01	0.00e+00	5.30e-01
MN-54	0.00e+00	7.49e+02	0.00e+00	1.66e+02	0.00e+00	2.75e+02	0.00e+00	1.70e+02
MN-56	0.00e+00	3.08e+01	0.00e+00	2.64e+01	0.00e+00	2.80e+03	0.00e+00	5.30e+00
FE-55	5.23e+02	3.38e+02	0.00e+00	0.00e+00	1.65e+02	4.29e+01	0.00e+00	9.03e+01
FE-59	1.16e+03	2.02e+03	0.00e+00	0.00e+00	5.98e+02	9.67e+02	0.00e+00	7.98e+02
CO-58	0.00e+00	1.35e+02	0.00e+00	0.00e+00	0.00e+00	3.37e+02	0.00e+00	3.38e+02
CO-60	0.00e+00	4.06e+02	0.00e+00	0.00e+00	0.00e+00	9.67e+02	0.00e+00	9.59e+02
NI-63	2.39e+04	1.47e+03	0.00e+00	0.00e+00	0.00e+00	7.34e+01	0.00e+00	8.28e+02
NI-65	1.77e+02	2.00e+01	0.00e+00	0.00e+00	0.00e+00	1.52e+03	0.00e+00	9.10e+00
CU-64	0.00e+00	2.29e+01	0.00e+00	3.87e+01	0.00e+00	4.70e+02	0.00e+00	1.06e+01
ZN-65	6.92e+02	2.37e+03	0.00e+00	1.15e+03	0.00e+00	2.01e+03	0.00e+00	1.09e+03
ZN-69	3.51e+00	6.32e+00	0.00e+00	2.63e+00	0.00e+00	5.15e+02	0.00e+00	4.70e-01
BR-83	0.00e+00	0.00e+00	0.00e+00	0.00e+00	0.00e+00	0.00e+00	0.00e+00	1.37e+01
BR-84	0.00e+00	0.00e+00	0.00e+00	0.00e+00	0.00e+00	0.00e+00	0.00e+00	1.44e+01
BR-85	0.00e+00	0.00e+00	0.00e+00	0.00e+00	0.00e+00	0.00e+00	0.00e+00	7.30e-01
RB-86	0.00e+00	6.40e+03	0.00e+00	0.00e+00	0.00e+00	1.64e+02	0.00e+00	3.16e+03
RB-88	0.00e+00	1.87e+01	0.00e+00	0.00e+00	0.00e+00	1.82e+01	0.00e+00	1.03e+01
RB-89	0.00e+00	1.08e+01	0.00e+00	0.00e+00	0.00e+00	3.66e+00	0.00e+00	7.41e+00
SR-89	9.44e+04	0.00e+00	0.00e+00	0.00e+00	0.00e+00	1.94e+03	0.00e+00	2.71e+03
SR-90	6.96e+05	0.00e+00	0.00e+00	0.00e+00	0.00e+00	8.69e+03	0.00e+00	1.77e+05
SR-91	1.88e+03	0.00e+00	0.00e+00	0.00e+00	0.00e+00	2.23e+03	0.00e+00	6.81e+01
SR-92	7.22e+02	0.00e+00	0.00e+00	0.00e+00	0.00e+00	7.79e+03	0.00e+00	2.68e+01
Y-90	3.27e+00	0.00e+00	0.00e+00	0.00e+00	0.00e+00	4.51e+03	0.00e+00	8.77e-02
Y-91	4.25e+01	0.00e+00	0.00e+00	0.00e+00	0.00e+00	3.05e+03	0.00e+00	1.13e+00
Y-91M	3.05e-02	0.00e+00	0.00e+00	0.00e+00	0.00e+00	1.02e+02	0.00e+00	1.04e-03
Y-92	2.88e-01	0.00e+00	0.00e+00	0.00e+00	0.00e+00	5.49e+03	0.00e+00	8.09e-03
Y-93	9.14e-01	0.00e+00	0.00e+00	0.00e+00	0.00e+00	7.22e+03	0.00e+00	2.49e-02
ZR-95	7.75e+00	1.89e+00	0.00e+00	2.04e+00	0.00e+00	9.40e+02	0.00e+00	1.34e+00
ZR-97	5.57e-01	9.56e-02	0.00e+00	9.63e-02	0.00e+00	6.09e+03	0.00e+00	4.36e-02
NB-95	1.58e+00	6.51e-01	0.00e+00	4.66e-01	0.00e+00	5.49e+02	0.00e+00	3.76e-01
MO-99	0.00e+00	1.28e+03	0.00e+00	1.91e+03	0.00e+00	4.21e+02	0.00e+00	2.49e+02
TC-99M	7.22e-02	1.49e-01	0.00e+00	1.60e+00	7.79e-02	4.33e+01	0.00e+00	1.92e+00
TC-101	8.54e-02	1.08e-01	0.00e+00	1.28e+00	5.87e-02	1.83e+01	0.00e+00	1.06e+00
RU-103	5.57e+01	0.00e+00	0.00e+00	1.16e+02	0.00e+00	6.77e+02	0.00e+00	1.86e+01

DOSE COMMITMENT FACTORS
FOR THE POTABLE WATER PATHWAY
(Ref. 3.15)

Release Type: Liquid
Units: ((mrem/hr)/(μCi/ml))
Age Group: INFANT
Pathway: Potable Water (PWtr)

Nuclide	Bone	Liver	Thyroid	Kidney	Lung	GI-Lli	Skin	TB
RU-105	5.12e+00	0.00e+00	0.00e+00	3.76e+01	0.00e+00	2.04e+03	0.00e+00	1.72e+00
RU-106	9.07e+02	0.00e+00	0.00e+00	1.07e+03	0.00e+00	6.88e+03	0.00e+00	1.13e+02
AG-110M	3.75e+01	2.73e+01	0.00e+00	3.91e+01	0.00e+00	1.42e+03	0.00e+00	1.81e+01
TE-125M	8.77e+02	2.93e+02	2.95e+02	0.00e+00	0.00e+00	4.18e+02	0.00e+00	1.19e+02
TE-127	3.76e+01	1.26e+01	3.06e+01	9.18e+01	0.00e+00	7.90e+02	0.00e+00	8.09e+00
TE-127M	2.20e+03	7.30e+02	6.36e+02	5.42e+03	0.00e+00	8.88e+02	0.00e+00	2.66e+02
TE-129	1.07e+01	3.68e+00	8.95e+00	2.66e+01	0.00e+00	8.54e+02	0.00e+00	2.49e+00
TE-129M	3.76e+03	1.29e+03	1.44e+03	9.40e+03	0.00e+00	2.25e+03	0.00e+00	5.79e+02
TE-131	6.62e+00	2.45e+00	5.91e+00	1.69e+01	0.00e+00	2.67e+02	0.00e+00	1.86e+00
TE-131M	5.72e+02	2.30e+02	4.66e+02	1.58e+03	0.00e+00	3.87e+03	0.00e+00	1.90e+02
TE-132	7.82e+02	3.87e+02	5.72e+02	2.42e+03	0.00e+00	1.43e+03	0.00e+00	3.62e+02
I-130	2.26e+02	4.97e+02	5.57e+04	5.45e+02	0.00e+00	1.06e+02	0.00e+00	1.99e+02
I-131	1.35e+03	1.59e+03	5.23e+05	1.86e+03	0.00e+00	5.68e+01	0.00e+00	7.00e+02
I-132	6.24e+01	1.27e+02	5.94e+03	1.41e+02	0.00e+00	1.03e+02	0.00e+00	4.51e+01
I-133	4.70e+02	6.85e+02	1.25e+05	8.05e+02	0.00e+00	1.16e+02	0.00e+00	2.01e+02
I-134	3.27e+01	6.70e+01	1.56e+03	7.49e+01	0.00e+00	6.92e+01	0.00e+00	2.38e+01
I-135	1.37e+02	2.72e+02	2.44e+04	3.04e+02	0.00e+00	9.86e+01	0.00e+00	9.93e+01
CS-134	1.42e+04	2.64e+04	0.00e+00	6.81e+03	2.79e+03	7.19e+01	0.00e+00	2.67e+03
CS-136	1.73e+03	5.08e+03	0.00e+00	2.02e+03	4.14e+02	7.71e+01	0.00e+00	1.90e+03
CS-137	1.96e+04	2.30e+04	0.00e+00	6.17e+03	2.50e+03	7.19e+01	0.00e+00	1.63e+03
CS-138	1.81e+01	2.94e+01	0.00e+00	1.47e+01	2.29e+00	4.70e+01	0.00e+00	1.43e+01
BA-139	3.31e+01	2.20e-02	0.00e+00	1.32e-02	1.33e-02	2.10e+03	0.00e+00	9.59e-01
BA-140	6.43e+03	6.43e+00	0.00e+00	1.53e+00	3.95e+00	1.58e+03	0.00e+00	3.31e+02
BA-141	1.60e+01	1.09e-02	0.00e+00	6.58e-03	6.66e-03	1.95e+02	0.00e+00	5.04e-01
BA-142	6.92e+00	5.76e-03	0.00e+00	3.31e-03	3.48e-03	2.86e+01	0.00e+00	3.41e-01
LA-140	7.94e-01	3.13e-01	0.00e+00	0.00e+00	0.00e+00	3.68e+03	0.00e+00	8.05e-02
LA-142	4.14e-02	1.52e-02	0.00e+00	0.00e+00	0.00e+00	2.58e+03	0.00e+00	3.64e-03
CE-141	2.96e+00	1.81e+00	0.00e+00	5.57e-01	0.00e+00	9.33e+02	0.00e+00	2.13e-01
CE-143	5.57e-01	3.69e+02	0.00e+00	1.08e-01	0.00e+00	2.16e+03	0.00e+00	4.21e-02
CE-144	1.12e+02	4.59e+01	0.00e+00	1.85e+01	0.00e+00	6.43e+03	0.00e+00	6.28e+00
PR-143	3.06e+00	1.14e+00	0.00e+00	4.25e-01	0.00e+00	1.61e+03	0.00e+00	1.52e-01
PR-144	1.03e-02	3.99e-03	0.00e+00	1.44e-03	0.00e+00	1.85e+02	0.00e+00	5.19e-04
ND-147	2.08e+00	2.14e+00	0.00e+00	8.24e-01	0.00e+00	1.35e+03	0.00e+00	1.31e-01
W-187	3.40e+01	2.36e+01	0.00e+00	0.00e+00	0.00e+00	1.39e+03	0.00e+00	8.16e+00
NP-239	4.18e-01	3.74e-02	0.00e+00	7.45e-02	0.00e+00	1.08e+03	0.00e+00	2.11e-02

DOSE COMMITMENT FACTORS
FOR THE FISH PATHWAY
(Ref. 3.15)

Release Type: Liquid
Units: ((mrem/hr)/(µCi/ml))
Age Group: ADULT
Pathway: Fresh Water Fish - Sport (FFSP)

Nuclide	Bone	Liver	Thyroid	Kidney	Lung	GI-Lli	Skin	TB
H-3	0.00e+00	2.26e-01	2.26e-01	2.26e-01	2.26e-01	2.26e-01	0.00e+00	2.26e-01
C-14	3.13e+04	6.26e+03	6.26e+03	6.26e+03	6.26e+03	6.26e+03	0.00e+00	6.26e+03
NA-24	4.07e+02	4.07e+02	4.07e+02	4.07e+02	4.07e+02	4.07e+02	0.00e+00	4.07e+02
(1) P-32	2.15e+05	8.62e+04	0.00e+00	0.00e+00	0.00e+00	1.56e+05	0.00e+00	5.36e+04
CR-51	0.00e+00	0.00e+00	7.61e-01	2.81e-01	1.69e+00	3.20e+02	0.00e+00	1.27e+00
MN-54	0.00e+00	4.38e+03	0.00e+00	1.30e+03	0.00e+00	1.34e+04	0.00e+00	8.35e+02
MN-56	0.00e+00	1.10e+02	0.00e+00	1.40e+02	0.00e+00	3.51e+03	0.00e+00	1.95e+01
FE-55	6.58e+02	4.55e+02	0.00e+00	0.00e+00	2.54e+02	2.61e+02	0.00e+00	1.06e+02
FE-59	1.04e+03	2.44e+03	0.00e+00	0.00e+00	6.82e+02	8.14e+03	0.00e+00	9.36e+02
CO-58	0.00e+00	8.92e+01	0.00e+00	0.00e+00	0.00e+00	1.81e+03	0.00e+00	2.00e+02
CO-60	0.00e+00	2.56e+02	0.00e+00	0.00e+00	0.00e+00	4.81e+03	0.00e+00	5.65e+02
NI-63	3.11e+04	2.16e+03	0.00e+00	0.00e+00	0.00e+00	4.50e+02	0.00e+00	1.04e+03
NI-65	1.26e+02	1.64e+01	0.00e+00	0.00e+00	0.00e+00	4.17e+02	0.00e+00	7.49e+00
CU-64	0.00e+00	9.97e+00	0.00e+00	2.51e+01	0.00e+00	8.50e+02	0.00e+00	4.68e+00
ZN-65	2.32e+04	7.37e+04	0.00e+00	4.93e+04	0.00e+00	4.64e+04	0.00e+00	3.33e+04
ZN-69	4.93e+01	9.43e+01	0.00e+00	6.13e+01	0.00e+00	1.42e+01	0.00e+00	6.56e+00
BR-83	0.00e+00	0.00e+00	0.00e+00	0.00e+00	0.00e+00	5.82e+01	0.00e+00	4.04e+01
BR-84	0.00e+00	0.00e+00	0.00e+00	0.00e+00	0.00e+00	4.11e-04	0.00e+00	5.24e+01
BR-85	0.00e+00	0.00e+00	0.00e+00	0.00e+00	0.00e+00	0.00e+00	0.00e+00	2.15e+00
RB-86	0.00e+00	1.01e+05	0.00e+00	0.00e+00	0.00e+00	1.99e+04	0.00e+00	4.71e+04
RB-88	0.00e+00	2.90e+02	0.00e+00	0.00e+00	0.00e+00	4.00e-09	0.00e+00	1.54e+02
RB-89	0.00e+00	1.92e+02	0.00e+00	0.00e+00	0.00e+00	1.12e-11	0.00e+00	1.35e+02
SR-89	2.21e+04	0.00e+00	0.00e+00	0.00e+00	0.00e+00	3.55e+03	0.00e+00	6.35e+02
SR-90	5.44e+05	0.00e+00	0.00e+00	0.00e+00	0.00e+00	1.57e+04	0.00e+00	1.34e+05
SR-91	4.07e+02	0.00e+00	0.00e+00	0.00e+00	0.00e+00	1.94e+03	0.00e+00	1.64e+01
SR-92	1.54e+02	0.00e+00	0.00e+00	0.00e+00	0.00e+00	3.06e+03	0.00e+00	6.68e+00
Y-90	5.76e-01	0.00e+00	0.00e+00	0.00e+00	0.00e+00	6.10e+03	0.00e+00	1.54e-02
Y-91	8.44e+00	0.00e+00	0.00e+00	0.00e+00	0.00e+00	4.64e+03	0.00e+00	2.26e-01
Y-91M	5.44e-03	0.00e+00	0.00e+00	0.00e+00	0.00e+00	1.60e-02	0.00e+00	2.11e-04
Y-92	5.06e-02	0.00e+00	0.00e+00	0.00e+00	0.00e+00	8.86e+02	0.00e+00	1.48e-03
Y-93	1.60e-01	0.00e+00	0.00e+00	0.00e+00	0.00e+00	5.09e+03	0.00e+00	4.43e-03
ZR-95	2.40e-01	7.70e-02	0.00e+00	1.21e-01	0.00e+00	2.44e+02	0.00e+00	5.21e-02
ZR-97	1.33e-02	2.68e-03	0.00e+00	4.04e-03	0.00e+00	8.30e+02	0.00e+00	1.22e-03
NB-95	4.47e+02	2.48e+02	0.00e+00	2.46e+02	0.00e+00	1.51e+06	0.00e+00	1.34e+02
MO-99	0.00e+00	1.03e+02	0.00e+00	2.34e+02	0.00e+00	2.39e+02	0.00e+00	1.96e+01
TC-99M	8.87e-03	2.51e-02	0.00e+00	3.81e-01	1.23e-02	1.48e+01	0.00e+00	3.19e-01
TC-101	9.12e-03	1.31e-02	0.00e+00	2.37e-01	6.72e-03	3.95e-14	0.00e+00	1.29e-01
RU-103	4.43e+00	0.00e+00	0.00e+00	1.69e+01	0.00e+00	5.17e+02	0.00e+00	1.91e+00

(1) Ingestion dose factor (for bone) used in calculation of Dose Commitment Factor for P-32 derived in accordance with information supplied in Reference 3.17. The teen and child bone dose ingestion dose factors were derived by the ratio of the adult bone ingestion dose factors in Reg. Guide 1.109 and "The Importance of P-32 in Nuclear Reactor Liquid Effluents," Branagan, E. F., Nichols, C.R., and Willis, C. A., USNRC, 6/82 (Ref 3.17).

DOSE COMMITMENT FACTORS
FOR THE FISH PATHWAY
(Ref. 3.15)

Release Type: Liquid
Dose Factor: ((mrem/hr)/(μCi/ml))
Age Group: ADULT
Pathway: Fresh Water Fish - Sport (FFSP)

Nuclide	Bone	Liver	Thyroid	Kidney	Lung	GI-Lli	Skin	TB
RU-105	3.69e-01	0.00e+00	0.00e+00	4.76e+00	0.00e+00	2.26e+02	0.00e+00	1.46e-01
RU-106	6.58e+01	0.00e+00	0.00e+00	1.27e+02	0.00e+00	4.26e+03	0.00e+00	8.33e+00
AG-110M	8.81e-01	8.15e-01	0.00e+00	1.60e+00	0.00e+00	3.33e+02	0.00e+00	4.84e-01
TE-125M	2.57e+03	9.30e+02	7.72e+02	1.04e+04	0.00e+00	1.02e+04	0.00e+00	3.44e+02
TE-127	1.05e+02	3.78e+01	7.80e+01	4.29e+02	0.00e+00	8.31e+03	0.00e+00	2.28e+01
TE-127M	6.48e+03	2.32e+03	1.66e+03	2.63e+04	0.00e+00	2.17e+04	0.00e+00	7.90e+02
TE-129	3.01e+01	1.13e+01	2.31e+01	1.26e+02	0.00e+00	2.27e+01	0.00e+00	7.33e+00
TE-129M	1.10e+04	4.11e+03	3.78e+03	4.60e+04	0.00e+00	5.55e+01	0.00e+00	1.74e+03
TE-131	1.89e+01	7.88e+00	1.55e+01	8.26e+01	0.00e+00	2.67e+00	0.00e+00	5.96e+00
TE-131M	1.66e+03	8.10e+02	1.28e+03	8.21e+03	0.00e+00	8.04e+04	0.00e+00	6.75e+02
TE-132	2.41e+03	1.56e+03	1.72e+03	1.50e+04	0.00e+00	7.38e+04	0.00e+00	1.47e+03
I-130	2.71e+01	8.01e+01	6.79e+03	1.25e+02	0.00e+00	6.89e+01	0.00e+00	3.16e+01
I-131	1.49e+02	2.14e+02	7.00e+04	3.66e+02	0.00e+00	5.64e+01	0.00e+00	1.22e+02
I-132	7.29e+00	1.95e+01	6.82e+02	3.11e+01	0.00e+00	3.66e+00	0.00e+00	6.82e+00
I-133	5.10e+01	8.87e+01	1.30e+04	1.55e+02	0.00e+00	7.97e+01	0.00e+00	2.70e+01
I-134	3.81e+00	1.03e+01	1.79e+02	1.64e+01	0.00e+00	9.01e-03	0.00e+00	3.70e+00
I-135	1.59e+01	4.17e+01	2.75e+03	6.68e+01	0.00e+00	4.70e+01	0.00e+00	1.54e+01
CS-134	2.98e+05	7.09e+05	0.00e+00	2.29e+05	7.61e+04	1.24e+04	0.00e+00	5.79e+05
CS-136	3.12e+04	1.23e+05	0.00e+00	6.85e+04	9.38e+03	1.40e+04	0.00e+00	8.86e+04
CS-137	3.82e+05	5.22e+05	0.00e+00	1.77e+05	5.89e+04	1.01e+04	0.00e+00	3.42e+05
CS-138	2.64e+02	5.22e+02	0.00e+00	3.84e+02	3.79e+01	2.23e-03	0.00e+00	2.59e+02
BA-139	9.29e-01	6.62e-04	0.00e+00	6.19e-04	3.75e-04	1.65e+00	0.00e+00	2.72e-02
BA-140	1.94e+02	2.44e-01	0.00e+00	8.31e+00	1.40e-01	4.00e+02	0.00e+00	1.27e+01
BA-141	4.51e-01	3.41e-04	0.00e+00	3.17e-04	1.93e-04	2.13e-10	0.00e+00	1.52e-02
BA-142	2.04e-01	2.10e-04	0.00e+00	1.77e-04	1.19e-04	2.87e-19	0.00e+00	1.28e-02
LA-140	1.50e-01	7.54e-02	0.00e+00	0.00e+00	0.00e+00	5.54e+03	0.00e+00	1.99e-02
LA-142	7.66e-03	3.48e-03	0.00e+00	0.00e+00	0.00e+00	2.54e+01	0.00e+00	8.68e-04
CE-141	2.24e-02	1.52e-02	0.00e+00	7.04e-03	0.00e+00	5.79e+01	0.00e+00	1.72e-03
CE-143	3.95e-03	2.92e+00	0.00e+00	1.29e-03	0.00e+00	1.09e+02	0.00e+00	3.23e-04
CE-144	1.17e+00	4.88e-01	0.00e+00	2.90e-01	0.00e+00	3.95e+02	0.00e+00	6.27e-02
PR-143	5.51e-01	2.21e-01	0.00e+00	1.27e-01	0.00e+00	2.41e+03	0.00e+00	2.73e-02
PR-144	1.80e-03	7.48e-04	0.00e+00	4.22e-04	0.00e+00	2.59e-10	0.00e+00	9.16e-05
ND-147	3.76e-01	4.35e-01	0.00e+00	2.54e-01	0.00e+00	2.09e+03	0.00e+00	2.60e-02
W-187	2.96e+02	2.47e+02	0.00e+00	0.00e+00	0.00e+00	8.10e+04	0.00e+00	8.65e+01
NP-239	2.85e-02	2.80e-03	0.00e+00	8.74e-03	0.00e+00	5.75e+02	0.00e+00	1.54e-03

DOSE COMMITMENT FACTORS
FOR THE FISH PATHWAY
(Ref. 3.15)

Release Type: Liquid
Units: ((mrem/hr)/(μCi/ml))
Age Group: TEEN
Pathway: Fresh Water Fish - Sport (FFSP)

Nuclide	Bone	Liver	Thyroid	Kidney	Lung	GI-Lli	Skin	TB
H-3	0.00e+00	1.74e-01	1.74e-01	1.74e-01	1.74e-01	1.74e-01	0.00e+00	1.74e-01
C-14	3.41e+04	6.81e+03	6.81e+03	6.81e+03	6.81e+03	6.81e+03	0.00e+00	6.81e+03
NA-24	4.20e+02	4.20e+02	4.20e+02	4.20e+02	4.20e+02	4.20e+02	0.00e+00	4.20e+02
(1) P-32	2.35e+05	9.36e+04	0.00e+00	0.00e+00	0.00e+00	1.27e+05	0.00e+00	5.86e+04
CR-51	0.00e+00	0.00e+00	7.30e-01	2.88e-01	1.88e+00	2.21e+02	0.00e+00	1.31e+00
MN-54	0.00e+00	4.30e+03	0.00e+00	1.28e+03	0.00e+00	8.83e+03	0.00e+00	8.54e+02
MN-56	0.00e+00	1.15e+02	0.00e+00	1.46e+02	0.00e+00	7.59e+03	0.00e+00	2.05e+01
FE-55	6.89e+02	4.89e+02	0.00e+00	0.00e+00	3.10e+02	2.12e+02	0.00e+00	1.14e+02
FE-59	1.07e+03	2.50e+03	0.00e+00	0.00e+00	7.88e+02	5.91e+03	0.00e+00	9.65e+02
CO-58	0.00e+00	8.86e+01	0.00e+00	0.00e+00	0.00e+00	1.22e+03	0.00e+00	2.04e+02
CO-60	0.00e+00	2.56e+02	0.00e+00	0.00e+00	0.00e+00	3.34e+03	0.00e+00	5.77e+02
NI-63	3.23e+04	2.28e+03	0.00e+00	0.00e+00	0.00e+00	3.63e+02	0.00e+00	1.09e+03
NI-65	1.37e+02	1.75e+01	0.00e+00	0.00e+00	0.00e+00	9.47e+02	0.00e+00	7.95e+00
CU-64	0.00e+00	1.05e+01	0.00e+00	2.65e+01	0.00e+00	8.14e+02	0.00e+00	4.93e+00
ZN-65	2.10e+04	7.30e+04	0.00e+00	4.67e+04	0.00e+00	3.09e+04	0.00e+00	3.40e+04
ZN-69	5.36e+01	1.02e+02	0.00e+00	6.68e+01	0.00e+00	1.88e+02	0.00e+00	7.15e+00
BR-83	0.00e+00	0.00e+00	0.00e+00	0.00e+00	0.00e+00	0.00e+00	0.00e+00	4.40e+01
BR-84	0.00e+00	0.00e+00	0.00e+00	0.00e+00	0.00e+00	0.00e+00	0.00e+00	5.53e+01
BR-85	0.00e+00	0.00e+00	0.00e+00	0.00e+00	0.00e+00	0.00e+00	0.00e+00	2.34e+00
RB-86	0.00e+00	1.09e+05	0.00e+00	0.00e+00	0.00e+00	1.61e+04	0.00e+00	5.11e+04
RB-88	0.00e+00	3.11e+02	0.00e+00	0.00e+00	0.00e+00	2.66e-05	0.00e+00	1.66e+02
RB-89	0.00e+00	2.01e+02	0.00e+00	0.00e+00	0.00e+00	3.08e-07	0.00e+00	1.42e+02
SR-89	2.41e+04	0.00e+00	0.00e+00	0.00e+00	0.00e+00	2.87e+03	0.00e+00	6.89e+02
SR-90	4.54e+05	0.00e+00	0.00e+00	0.00e+00	0.00e+00	1.27e+04	0.00e+00	1.12e+05
SR-91	4.42e+02	0.00e+00	0.00e+00	0.00e+00	0.00e+00	2.00e+03	0.00e+00	1.76e+01
SR-92	1.67e+02	0.00e+00	0.00e+00	0.00e+00	0.00e+00	4.25e+03	0.00e+00	7.11e+00
Y-90	6.25e-01	0.00e+00	0.00e+00	0.00e+00	0.00e+00	5.15e+03	0.00e+00	1.68e-02
Y-91	9.17e+00	0.00e+00	0.00e+00	0.00e+00	0.00e+00	3.76e+03	0.00e+00	2.46e-01
Y-91M	5.88e-03	0.00e+00	0.00e+00	0.00e+00	0.00e+00	2.78e-01	0.00e+00	2.25e-04
Y-92	5.52e-02	0.00e+00	0.00e+00	0.00e+00	0.00e+00	1.51e+03	0.00e+00	1.60e-03
Y-93	1.75e-01	0.00e+00	0.00e+00	0.00e+00	0.00e+00	5.34e+03	0.00e+00	4.79e-03
ZR-95	2.48e-01	7.82e-02	0.00e+00	1.15e-01	0.00e+00	1.81e+02	0.00e+00	5.38e-02
ZR-97	1.43e-02	2.82e-03	0.00e+00	4.28e-03	0.00e+00	7.64e+02	0.00e+00	1.30e-03
NB-95	4.50e+02	2.50e+02	0.00e+00	2.42e+02	0.00e+00	1.07e+06	0.00e+00	1.37e+02
MO-99	0.00e+00	1.10e+02	0.00e+00	2.52e+02	0.00e+00	1.97e+02	0.00e+00	2.10e+01
TC-99M	9.08e-03	2.53e-02	0.00e+00	3.78e-01	1.41e-02	1.66e+01	0.00e+00	3.28e-01
TC-101	9.85e-03	1.40e-02	0.00e+00	2.53e-01	8.54e-03	2.39e-09	0.00e+00	1.38e-01
RU-103	4.65e+00	0.00e+00	0.00e+00	1.64e+01	0.00e+00	3.89e+02	0.00e+00	1.99e+00

(1) Ingestion dose factor (for bone) used in calculation of Dose Commitment Factor for P-32 derived in accordance with information supplied in Reference 3.17. The teen and child bone dose ingestion dose factors were derived by the ratio of the adult bone ingestion dose factors in Reg. Guide 1.109 and "The Importance of P-32 in Nuclear Reactor Liquid Effluents," Branagan, E. F., Nichols, C.R., and Willis, C. A., USNRC, 6/82 (Ref 3.17).

DOSE COMMITMENT FACTORS
FOR THE FISH PATHWAY
(Ref. 3.15)

Release Type: Liquid
Units: ((mrem/hr)/(µCi/ml))
Age Group: TEEN
Pathway: Fresh Water Fish - Sport (FFSP)

Nuclide	Bone	Liver	Thyroid	Kidney	Lung	GI-Lli	Skin	TB
RU-105	3.98e-01	0.00e+00	0.00e+00	5.02e+00	0.00e+00	3.21e+02	0.00e+00	1.54e-01
RU-106	7.15e+01	0.00e+00	0.00e+00	1.38e+02	0.00e+00	3.43e+03	0.00e+00	9.01e+00
AG-110M	8.60e-01	8.14e-01	0.00e+00	1.55e+00	0.00e+00	2.29e+02	0.00e+00	4.95e-01
TE-125M	2.79e+03	1.01e+03	7.81e+02	0.00e+00	0.00e+00	8.24e+03	0.00e+00	3.74e+02
TE-127	1.15e+02	4.09e+01	7.95e+01	4.67e+02	0.00e+00	8.90e+03	0.00e+00	2.48e+01
TE-127M	7.06e+03	2.50e+03	1.68e+03	2.86e+04	0.00e+00	1.76e+04	0.00e+00	8.39e+02
TE-129	3.27e+01	1.22e+01	2.33e+01	1.37e+02	0.00e+00	1.79e+02	0.00e+00	7.95e+00
TE-129M	1.19e+04	4.41e+03	3.84e+03	4.98e+04	0.00e+00	4.47e+04	0.00e+00	1.88e+03
TE-131	2.04e+01	8.39e+00	1.57e+01	8.90e+01	0.00e+00	1.67e+00	0.00e+00	6.36e+00
TE-131M	1.78e+03	8.54e+02	1.28e+03	8.90e+03	0.00e+00	6.85e+04	0.00e+00	7.12e+02
TE-132	2.55e+03	1.61e+03	1.70e+03	1.55e+04	0.00e+00	5.11e+04	0.00e+00	1.52e+03
I-130	2.82e+01	8.15e+01	6.65e+03	1.26e+02	0.00e+00	6.27e+01	0.00e+00	3.26e+01
I-131	1.60e+02	2.24e+02	6.54e+04	3.86e+02	0.00e+00	4.43e+01	0.00e+00	1.20e+02
I-132	7.63e+00	2.00e+01	6.73e+02	3.15e+01	0.00e+00	8.70e+00	0.00e+00	7.17e+00
I-133	5.50e+01	9.33e+01	1.30e+04	1.64e+02	0.00e+00	7.06e+01	0.00e+00	2.85e+01
I-134	3.99e+00	1.06e+01	1.76e+02	1.67e+01	0.00e+00	1.40e-01	0.00e+00	3.80e+00
I-135	1.67e+01	4.30e+01	2.76e+03	6.79e+01	0.00e+00	4.76e+01	0.00e+00	1.59e+01
CS-134	3.05e+05	7.19e+05	0.00e+00	2.28e+05	8.72e+04	8.94e+03	0.00e+00	3.33e+05
CS-136	3.13e+04	1.23e+05	0.00e+00	6.71e+04	1.06e+04	9.92e+03	0.00e+00	8.28e+04
CS-137	4.09e+05	5.44e+05	0.00e+00	1.85e+05	7.19e+04	7.73e+03	0.00e+00	1.89e+05
CS-138	2.83e+02	5.44e+02	0.00e+00	4.01e+02	4.67e+01	2.47e-01	0.00e+00	2.72e+02
BA-139	1.01e+00	7.14e-04	0.00e+00	6.73e-04	4.92e-04	9.05e+00	0.00e+00	2.95e-02
BA-140	2.07e+02	2.54e-01	0.00e+00	8.61e-02	1.71e-01	3.20e+02	0.00e+00	1.34e+01
BA-141	4.90e-01	3.66e-04	0.00e+00	3.39e-04	2.50e-04	1.04e-06	0.00e+00	1.63e-02
BA-142	2.18e-01	2.18e-04	0.00e+00	1.85e-04	1.45e-04	6.70e-13	0.00e+00	1.34e-02
LA-140	1.59e-01	7.80e-02	0.00e+00	0.00e+00	0.00e+00	4.48e+03	0.00e+00	2.07e-02
LA-142	8.16e-03	3.63e-03	0.00e+00	0.00e+00	0.00e+00	1.10e+02	0.00e+00	9.03e-04
CE-141	2.43e-02	1.62e-02	0.00e+00	7.62e-03	0.00e+00	4.63e+01	0.00e+00	1.86e-03
CE-143	4.29e-03	3.12e+00	0.00e+00	1.40e-03	0.00e+00	9.38e+01	0.00e+00	3.48e-04
CE-144	1.27e+00	5.25e-01	0.00e+00	3.14e-01	0.00e+00	3.19e+02	0.00e+00	6.82e-02
PR-143	5.97e-01	2.38e-01	0.00e+00	1.39e-01	0.00e+00	1.97e+03	0.00e+00	2.97e-02
PR-144	1.96e-03	8.03e-04	0.00e+00	4.61e-04	0.00e+00	2.16e-06	0.00e+00	9.94e-05
ND-147	4.28e-01	4.65e-01	0.00e+00	2.73e-01	0.00e+00	1.68e+03	0.00e+00	2.79e-02
W-187	3.20e+02	2.60e+02	0.00e+00	0.00e+00	0.00e+00	7.05e+04	0.00e+00	9.13e+01
NP-239	3.21e-02	3.03e-03	0.00e+00	9.50e-03	0.00e+00	4.87e+02	0.00e+00	1.68e-03

DOSE COMMITMENT FACTORS
FOR THE FISH PATHWAY
(Ref. 3.15)

Release Type: Liquid
Units: ((mrem/hr)/(μCi/ml))
Age Group: CHILD
Pathway: Fresh Water Fish - Sport (FFSP)

Nuclide	Bone	Liver	Thyroid	Kidney	Lung	GI-Lli	Skin	TB
H-3	0.00e+00	1.44e-01	1.44e-01	1.44e-01	1.44e-01	1.44e-01	0.00e+00	1.44e-01
C-14	4.38e+04	8.76e+03	8.76e+03	8.76e+03	8.76e+03	8.76e+03	0.00e+00	8.76e+03
NA-24	4.56e+02	4.56e+02	4.56e+02	4.56e+02	4.56e+02	4.56e+02	0.00e+00	4.56e+02
(1) P-32	3.02e+05	9.11e+04	0.00e+00	0.00e+00	0.00e+00	5.38e+04	0.00e+00	7.50e+04
CR-51	0.00e+00	0.00e+00	7.77e-01	2.12e-01	1.42e+00	7.43e+01	0.00e+00	1.40e+00
MN-54	0.00e+00	3.37e+03	0.00e+00	9.44e+02	0.00e+00	2.83e+03	0.00e+00	8.97e+02
MN-56	0.00e+00	1.05e+02	0.00e+00	1.27e+02	0.00e+00	1.52e+04	0.00e+00	2.37e+01
FE-55	9.05e+02	4.80e+02	0.00e+00	0.00e+00	2.71e+02	8.89e+01	0.00e+00	1.49e+02
FE-59	1.30e+03	2.10e+03	0.00e+00	0.00e+00	6.09e+02	2.19e+03	0.00e+00	1.05e+03
CO-58	0.00e+00	7.08e+01	0.00e+00	0.00e+00	0.00e+00	4.13e+02	0.00e+00	2.17e+02
CO-60	0.00e+00	2.08e+02	0.00e+00	0.00e+00	0.00e+00	1.15e+03	0.00e+00	6.14e+02
NI-63	4.23e+04	2.27e+03	0.00e+00	0.00e+00	0.00e+00	1.53e+02	0.00e+00	1.44e+03
NI-65	1.75e+02	1.64e+01	0.00e+00	0.00e+00	0.00e+00	2.01e+03	0.00e+00	9.60e+00
CU-64	0.00e+00	9.64e+00	0.00e+00	2.33e+01	0.00e+00	4.52e+02	0.00e+00	5.82e+00
ZN-65	2.16e+04	5.74e+04	0.00e+00	3.62e+04	0.00e+00	1.01e+04	0.00e+00	3.57e+04
ZN-69	6.89e+01	9.96e+01	0.00e+00	6.04e+01	0.00e+00	6.28e+03	0.00e+00	9.20e+00
BR-83	0.00e+00	0.00e+00	0.00e+00	0.00e+00	0.00e+00	0.00e+00	0.00e+00	5.65e+01
BR-84	0.00e+00	0.00e+00	0.00e+00	0.00e+00	0.00e+00	0.00e+00	0.00e+00	6.54e+01
BR-85	0.00e+00	0.00e+00	0.00e+00	0.00e+00	0.00e+00	0.00e+00	0.00e+00	3.01e+00
RB-86	0.00e+00	1.05e+05	0.00e+00	0.00e+00	0.00e+00	6.78e+03	0.00e+00	6.48e+04
RB-88	0.00e+00	2.99e+02	0.00e+00	0.00e+00	0.00e+00	1.47e+01	0.00e+00	2.08e+02
RB-89	0.00e+00	1.84e+02	0.00e+00	0.00e+00	0.00e+00	1.60e+00	0.00e+00	1.64e+02
SR-89	3.11e+04	0.00e+00	0.00e+00	0.00e+00	0.00e+00	1.21e+03	0.00e+00	8.90e+02
SR-90	4.01e+05	0.00e+00	0.00e+00	0.00e+00	0.00e+00	5.40e+03	0.00e+00	1.02e+05
SR-91	5.66e+02	0.00e+00	0.00e+00	0.00e+00	0.00e+00	1.25e+03	0.00e+00	2.14e+01
SR-92	2.13e+02	0.00e+00	0.00e+00	0.00e+00	0.00e+00	4.04e+03	0.00e+00	8.54e+00
Y-90	8.08e-01	0.00e+00	0.00e+00	0.00e+00	0.00e+00	2.30e+03	0.00e+00	2.16e-02
Y-91	1.18e+01	0.00e+00	0.00e+00	0.00e+00	0.00e+00	1.58e+03	0.00e+00	3.17e-01
Y-91M	7.51e-03	0.00e+00	0.00e+00	0.00e+00	0.00e+00	1.47e+01	0.00e+00	2.73e-04
Y-92	7.08e-02	0.00e+00	0.00e+00	0.00e+00	0.00e+00	2.05e+03	0.00e+00	2.03e-03
Y-93	2.24e-01	0.00e+00	0.00e+00	0.00e+00	0.00e+00	3.34e+03	0.00e+00	6.16e-03
ZR-95	3.01e-01	6.62e-02	0.00e+00	9.47e-02	0.00e+00	6.90e+01	0.00e+00	5.89e-02
ZR-97	1.81e-02	2.62e-03	0.00e+00	3.76e-03	0.00e+00	3.97e+02	0.00e+00	1.55e-03
NB-95	5.31e+02	2.07e+02	0.00e+00	1.94e+02	0.00e+00	3.82e+05	0.00e+00	1.48e+02
MO-99	0.00e+00	1.05e+02	0.00e+00	2.23e+02	0.00e+00	8.65e+01	0.00e+00	2.59e+01
TC-99M	1.09e-02	2.14e-02	0.00e+00	3.10e-01	1.08e-02	1.22e+01	0.00e+00	3.54e-01
TC-101	1.26e-02	1.32e-02	0.00e+00	2.25e-01	6.99e-03	4.20e-02	0.00e+00	1.68e-01
RU-103	5.75e+00	0.00e+00	0.00e+00	1.45e+01	0.00e+00	1.49e+02	0.00e+00	2.21e+00

(1) Ingestion dose factor (for bone) used in calculation of Dose Commitment Factor for P-32 derived in accordance with information supplied in Reference 3.17. The teen and child bone dose ingestion dose factors were derived by the ratio of the adult bone ingestion dose factors in Reg. Guide 1.109 and "The Importance of P-32 in Nuclear Reactor Liquid Effluents," Branagan, E. F., Nichols, C.R., and Willis, C. A., USNRC, 6/82 (Ref 3.17).

DOSE COMMITMENT FACTORS
FOR THE FISH PATHWAY
(Ref. 3.15)

Release Type: Liquid
Units: ((mrem/hr)/(μCi/ml))
Age Group: CHILD
Pathway: Fresh Water Fish - Sport (FFSP)

Nuclide	Bone	Liver	Thyroid	Kidney	Lung	GI-Lli	Skin	TB
RU-105	5.07e-01	0.00e+00	0.00e+00	4.46e+00	0.00e+00	3.31e+02	0.00e+00	1.84e-01
RU-106	9.20e+01	0.00e+00	0.00e+00	1.24e+02	0.00e+00	1.43e+03	0.00e+00	1.15e+01
AG-110M	9.75e-01	6.59e-01	0.00e+00	1.23e+00	0.00e+00	7.83e+01	0.00e+00	5.26e-01
TE-125M	3.59e+03	9.72e+02	1.01e+03	0.00e+00	0.00e+00	3.46e+03	0.00e+00	4.78e+02
TE-127	1.48e+02	4.00e+01	1.03e+02	4.22e+02	0.00e+00	5.79e+03	0.00e+00	3.18e+01
TE-127M	9.09e+03	2.45e+03	2.17e+03	2.59e+04	0.00e+00	7.36e+03	0.00e+00	1.08e+03
TE-129	4.22e+01	1.18e+01	3.01e+01	1.23e+02	0.00e+00	2.62e+03	0.00e+00	1.00e+01
TE-129M	1.53e+04	4.28e+03	4.94e+03	4.50e+04	0.00e+00	1.87e+04	0.00e+00	2.38e+03
TE-131	2.61e+01	7.96e+00	2.00e+01	7.90e+01	0.00e+00	1.37e+02	0.00e+00	7.77e+00
TE-131M	2.27e+03	7.83e+02	1.61e+03	7.58e+03	0.00e+00	3.18e+04	0.00e+00	8.34e+02
TE-132	3.18e+03	1.41e+03	2.05e+03	1.31e+04	0.00e+00	1.42e+04	0.00e+00	1.70e+03
I-130	3.45e+01	6.96e+01	7.67e+03	1.04e+02	0.00e+00	3.26e+01	0.00e+00	3.59e+01
I-131	2.03e+02	2.04e+02	6.75e+04	3.35e+02	0.00e+00	1.82e+01	0.00e+00	1.16e+02
I-132	9.44e+00	1.73e+01	8.05e+02	2.65e+01	0.00e+00	2.04e+01	0.00e+00	7.98e+00
I-133	6.99e+01	8.64e+01	1.60e+04	1.44e+02	0.00e+00	3.48e+01	0.00e+00	3.27e+01
I-134	4.94e+00	9.18e+00	2.11e+02	1.40e+01	0.00e+00	6.09e+00	0.00e+00	4.22e+00
I-135	2.06e+01	3.72e+01	3.29e+03	5.70e+01	0.00e+00	2.83e+01	0.00e+00	1.76e+01
CS-134	3.68e+05	6.04e+05	0.00e+00	1.87e+05	6.72e+04	3.26e+03	0.00e+00	1.27e+05
CS-136	3.70e+04	1.02e+05	0.00e+00	5.41e+04	8.07e+03	3.57e+03	0.00e+00	6.58e+04
CS-137	5.14e+05	4.92e+05	0.00e+00	1.60e+05	5.77e+04	3.08e+03	0.00e+00	7.27e+04
CS-138	3.59e+02	4.99e+02	0.00e+00	3.51e+02	3.78e+01	2.30e+02	0.00e+00	3.16e+02
BA-139	1.30e+00	6.95e-04	0.00e+00	6.07e-04	4.09e-04	7.52e+01	0.00e+00	3.78e-02
BA-140	2.61e+02	2.29e-01	0.00e+00	7.46e-02	1.37e-01	1.32e+02	0.00e+00	1.53e+01
BA-141	6.29e-01	3.52e-04	0.00e+00	3.05e-04	2.07e-03	3.59e-01	0.00e+00	2.05e-02
BA-142	2.75e-01	1.98e-04	0.00e+00	1.60e-04	1.16e-04	3.59e-03	0.00e+00	1.54e-02
LA-140	1.99e-01	6.94e-02	0.00e+00	0.00e+00	0.00e+00	1.94e+03	0.00e+00	2.34e-02
LA-142	1.03e-02	3.28e-03	0.00e+00	0.00e+00	0.00e+00	6.51e+02	0.00e+00	1.03e-03
CE-141	3.12e-02	1.56e-02	0.00e+00	6.83e-03	0.00e+00	1.94e+01	0.00e+00	2.31e-03
CE-143	5.50e-03	2.98e+00	0.00e+00	1.25e-03	0.00e+00	4.37e+01	0.00e+00	4.32e-04
CE-144	1.64e+00	5.13e-01	0.00e+00	2.84e-01	0.00e+00	1.34e+02	0.00e+00	8.73e-02
PR-143	7.73e-01	2.32e-01	0.00e+00	1.26e-01	0.00e+00	8.34e+02	0.00e+00	3.83e-02
PR-144	2.54e-03	7.85e-04	0.00e+00	4.15e-04	0.00e+00	1.69e+00	0.00e+00	1.28e-04
ND-147	5.49e-01	4.44e-01	0.00e+00	2.44e-01	0.00e+00	7.04e+02	0.00e+00	3.44e-02
W-187	4.05e+02	2.40e+02	0.00e+00	0.00e+00	0.00e+00	3.37e+04	0.00e+00	1.08e+02
NP-239	4.13e-02	2.97e-03	0.00e+00	8.57e-03	0.00e+00	2.19e+02	0.00e+00	2.08e-03

DOSE COMMITMENT FACTORS
FOR THE FISH PATHWAY
(Ref. 3.15)

Release Type: Liquid
Units: ((mrem/hr)/(μCi/ml))
Age Group: INFANT
Pathway: Fresh Water Fish - Sport (FFSP)

Nuclide	Bone	Liver	Thyroid	Kidney	Lung	GI-Lli	Skin	TB
H-3	0.00e+00	0.00e+00	0.00e+00	0.00e+00	0.00e+00	0.00e+00	0.00e+00	0.00e+00
C-14	0.00e+00	0.00e+00	0.00e+00	0.00e+00	0.00e+00	0.00e+00	0.00e+00	0.00e+00
NA-24	0.00e+00	0.00e+00	0.00e+00	0.00e+00	0.00e+00	0.00e+00	0.00e+00	0.00e+00
P-32	0.00e+00	0.00e+00	0.00e+00	0.00e+00	0.00e+00	0.00e+00	0.00e+00	0.00e+00
CR-51	0.00e+00	0.00e+00	0.00e+00	0.00e+00	0.00e+00	0.00e+00	0.00e+00	0.00e+00
MN-54	0.00e+00	0.00e+00	0.00e+00	0.00e+00	0.00e+00	0.00e+00	0.00e+00	0.00e+00
MN-56	0.00e+00	0.00e+00	0.00e+00	0.00e+00	0.00e+00	0.00e+00	0.00e+00	0.00e+00
FE-55	0.00e+00	0.00e+00	0.00e+00	0.00e+00	0.00e+00	0.00e+00	0.00e+00	0.00e+00
FE-59	0.00e+00	0.00e+00	0.00e+00	0.00e+00	0.00e+00	0.00e+00	0.00e+00	0.00e+00
CO-58	0.00e+00	0.00e+00	0.00e+00	0.00e+00	0.00e+00	0.00e+00	0.00e+00	0.00e+00
CO-60	0.00e+00	0.00e+00	0.00e+00	0.00e+00	0.00e+00	0.00e+00	0.00e+00	0.00e+00
NI-63	0.00e+00	0.00e+00	0.00e+00	0.00e+00	0.00e+00	0.00e+00	0.00e+00	0.00e+00
NI-65	0.00e+00	0.00e+00	0.00e+00	0.00e+00	0.00e+00	0.00e+00	0.00e+00	0.00e+00
CU-64	0.00e+00	0.00e+00	0.00e+00	0.00e+00	0.00e+00	0.00e+00	0.00e+00	0.00e+00
ZN-65	0.00e+00	0.00e+00	0.00e+00	0.00e+00	0.00e+00	0.00e+00	0.00e+00	0.00e+00
ZN-69	0.00e+00	0.00e+00	0.00e+00	0.00e+00	0.00e+00	0.00e+00	0.00e+00	0.00e+00
BR-83	0.00e+00	0.00e+00	0.00e+00	0.00e+00	0.00e+00	0.00e+00	0.00e+00	0.00e+00
BR-84	0.00e+00	0.00e+00	0.00e+00	0.00e+00	0.00e+00	0.00e+00	0.00e+00	0.00e+00
BR-85	0.00e+00	0.00e+00	0.00e+00	0.00e+00	0.00e+00	0.00e+00	0.00e+00	0.00e+00
RB-86	0.00e+00	0.00e+00	0.00e+00	0.00e+00	0.00e+00	0.00e+00	0.00e+00	0.00e+00
RB-88	0.00e+00	0.00e+00	0.00e+00	0.00e+00	0.00e+00	0.00e+00	0.00e+00	0.00e+00
RB-89	0.00e+00	0.00e+00	0.00e+00	0.00e+00	0.00e+00	0.00e+00	0.00e+00	0.00e+00
SR-89	0.00e+00	0.00e+00	0.00e+00	0.00e+00	0.00e+00	0.00e+00	0.00e+00	0.00e+00
SR-90	0.00e+00	0.00e+00	0.00e+00	0.00e+00	0.00e+00	0.00e+00	0.00e+00	0.00e+00
SR-91	0.00e+00	0.00e+00	0.00e+00	0.00e+00	0.00e+00	0.00e+00	0.00e+00	0.00e+00
SR-92	0.00e+00	0.00e+00	0.00e+00	0.00e+00	0.00e+00	0.00e+00	0.00e+00	0.00e+00
Y-90	0.00e+00	0.00e+00	0.00e+00	0.00e+00	0.00e+00	0.00e+00	0.00e+00	0.00e+00
Y-91	0.00e+00	0.00e+00	0.00e+00	0.00e+00	0.00e+00	0.00e+00	0.00e+00	0.00e+00
Y-91M	0.00e+00	0.00e+00	0.00e+00	0.00e+00	0.00e+00	0.00e+00	0.00e+00	0.00e+00
Y-92	0.00e+00	0.00e+00	0.00e+00	0.00e+00	0.00e+00	0.00e+00	0.00e+00	0.00e+00
Y-93	0.00e+00	0.00e+00	0.00e+00	0.00e+00	0.00e+00	0.00e+00	0.00e+00	0.00e+00
ZR-95	0.00e+00	0.00e+00	0.00e+00	0.00e+00	0.00e+00	0.00e+00	0.00e+00	0.00e+00
ZR-97	0.00e+00	0.00e+00	0.00e+00	0.00e+00	0.00e+00	0.00e+00	0.00e+00	0.00e+00
NB-95	0.00e+00	0.00e+00	0.00e+00	0.00e+00	0.00e+00	0.00e+00	0.00e+00	0.00e+00
MO-99	0.00e+00	0.00e+00	0.00e+00	0.00e+00	0.00e+00	0.00e+00	0.00e+00	0.00e+00
TC-99M	0.00e+00	0.00e+00	0.00e+00	0.00e+00	0.00e+00	0.00e+00	0.00e+00	0.00e+00
TC-101	0.00e+00	0.00e+00	0.00e+00	0.00e+00	0.00e+00	0.00e+00	0.00e+00	0.00e+00
RU-103	0.00e+00	0.00e+00	0.00e+00	0.00e+00	0.00e+00	0.00e+00	0.00e+00	0.00e+00

DOSE COMMITMENT FACTORS
FOR THE FISH PATHWAY
(Ref. 3.15)

Release Type: Liquid
Units: ((mrem/hr)/(µCi/ml))
Age Group: INFANT
Pathway: Fresh Water Fish - Sport (FFSP)

Nuclide	Bone	Liver	Thyroid	Kidney	Lung	GI-Lli	Skin	TB
RU-105	0.00e+00	0.00e+00	0.00e+00	0.00e+00	0.00e+00	0.00e+00	0.00e+00	0.00e+00
RU-106	0.00e+00	0.00e+00	0.00e+00	0.00e+00	0.00e+00	0.00e+00	0.00e+00	0.00e+00
AG-110M	0.00e+00	0.00e+00	0.00e+00	0.00e+00	0.00e+00	0.00e+00	0.00e+00	0.00e+00
TE-125M	0.00e+00	0.00e+00	0.00e+00	0.00e+00	0.00e+00	0.00e+00	0.00e+00	0.00e+00
TE-127	0.00e+00	0.00e+00	0.00e+00	0.00e+00	0.00e+00	0.00e+00	0.00e+00	0.00e+00
TE-127M	0.00e+00	0.00e+00	0.00e+00	0.00e+00	0.00e+00	0.00e+00	0.00e+00	0.00e+00
TE-129	0.00e+00	0.00e+00	0.00e+00	0.00e+00	0.00e+00	0.00e+00	0.00e+00	0.00e+00
TE-129M	0.00e+00	0.00e+00	0.00e+00	0.00e+00	0.00e+00	0.00e+00	0.00e+00	0.00e+00
TE-131	0.00e+00	0.00e+00	0.00e+00	0.00e+00	0.00e+00	0.00e+00	0.00e+00	0.00e+00
TE-131M	0.00e+00	0.00e+00	0.00e+00	0.00e+00	0.00e+00	0.00e+00	0.00e+00	0.00e+00
TE-132	0.00e+00	0.00e+00	0.00e+00	0.00e+00	0.00e+00	0.00e+00	0.00e+00	0.00e+00
I-130	0.00e+00	0.00e+00	0.00e+00	0.00e+00	0.00e+00	0.00e+00	0.00e+00	0.00e+00
I-131	0.00e+00	0.00e+00	0.00e+00	0.00e+00	0.00e+00	0.00e+00	0.00e+00	0.00e+00
I-132	0.00e+00	0.00e+00	0.00e+00	0.00e+00	0.00e+00	0.00e+00	0.00e+00	0.00e+00
I-133	0.00e+00	0.00e+00	0.00e+00	0.00e+00	0.00e+00	0.00e+00	0.00e+00	0.00e+00
I-134	0.00e+00	0.00e+00	0.00e+00	0.00e+00	0.00e+00	0.00e+00	0.00e+00	0.00e+00
I-135	0.00e+00	0.00e+00	0.00e+00	0.00e+00	0.00e+00	0.00e+00	0.00e+00	0.00e+00
CS-134	0.00e+00	0.00e+00	0.00e+00	0.00e+00	0.00e+00	0.00e+00	0.00e+00	0.00e+00
CS-136	0.00e+00	0.00e+00	0.00e+00	0.00e+00	0.00e+00	0.00e+00	0.00e+00	0.00e+00
CS-137	0.00e+00	0.00e+00	0.00e+00	0.00e+00	0.00e+00	0.00e+00	0.00e+00	0.00e+00
CS-138	0.00e+00	0.00e+00	0.00e+00	0.00e+00	0.00e+00	0.00e+00	0.00e+00	0.00e+00
BA-139	0.00e+00	0.00e+00	0.00e+00	0.00e+00	0.00e+00	0.00e+00	0.00e+00	0.00e+00
BA-140	0.00e+00	0.00e+00	0.00e+00	0.00e+00	0.00e+00	0.00e+00	0.00e+00	0.00e+00
BA-141	0.00e+00	0.00e+00	0.00e+00	0.00e+00	0.00e+00	0.00e+00	0.00e+00	0.00e+00
BA-142	0.00e+00	0.00e+00	0.00e+00	0.00e+00	0.00e+00	0.00e+00	0.00e+00	0.00e+00
LA-140	0.00e+00	0.00e+00	0.00e+00	0.00e+00	0.00e+00	0.00e+00	0.00e+00	0.00e+00
LA-142	0.00e+00	0.00e+00	0.00e+00	0.00e+00	0.00e+00	0.00e+00	0.00e+00	0.00e+00
CE-141	0.00e+00	0.00e+00	0.00e+00	0.00e+00	0.00e+00	0.00e+00	0.00e+00	0.00e+00
CE-143	0.00e+00	0.00e+00	0.00e+00	0.00e+00	0.00e+00	0.00e+00	0.00e+00	0.00e+00
CE-144	0.00e+00	0.00e+00	0.00e+00	0.00e+00	0.00e+00	0.00e+00	0.00e+00	0.00e+00
PR-143	0.00e+00	0.00e+00	0.00e+00	0.00e+00	0.00e+00	0.00e+00	0.00e+00	0.00e+00
PR-144	0.00e+00	0.00e+00	0.00e+00	0.00e+00	0.00e+00	0.00e+00	0.00e+00	0.00e+00
ND-147	0.00e+00	0.00e+00	0.00e+00	0.00e+00	0.00e+00	0.00e+00	0.00e+00	0.00e+00
W-187	0.00e+00	0.00e+00	0.00e+00	0.00e+00	0.00e+00	0.00e+00	0.00e+00	0.00e+00
NP-239	0.00e+00	0.00e+00	0.00e+00	0.00e+00	0.00e+00	0.00e+00	0.00e+00	0.00e+00

DOSE COMMITMENT FACTORS
FOR THE SHORELINE PATHWAY
(Ref. 3.15)

Release Type: Liquid
Dose Factor: ((mrem/hr)/(μCi/ml))
Age Group: ADULT
Pathway: Shoreline Sediment (SHDp)

Nuclide	Bone	Liver	Thyroid	Kidney	Lung	GI-Lli	Skin	TB
H-3	0.00e+00	0.00e+00	0.00e+00	0.00e+00	0.00e+00	0.00e+00	0.00e+00	0.00e+00
C-14	0.00e+00	0.00e+00	0.00e+00	0.00e+00	0.00e+00	0.00e+00	0.00e+00	0.00e+00
NA-24	4.27e-01	4.27e-01	4.27e-01	4.27e-01	4.27e-01	4.27e-01	4.96e-01	4.27e-01
P-32	0.00e+00	0.00e+00	0.00e+00	0.00e+00	0.00e+00	0.00e+00	0.00e+00	0.00e+00
CR-51	1.67e-01	1.67e-01	1.67e-01	1.67e-01	1.67e-01	1.67e-01	1.97e-01	1.67e-01
MN-54	4.96e+01	4.96e+01	4.96e+01	4.96e+01	4.96e+01	4.96e+01	5.81e+01	4.96e+01
MN-56	3.23e-02	3.23e-02	3.23e-02	3.23e-02	3.23e-02	3.23e-02	3.81e-02	3.23e-02
FE-55	0.00e+00	0.00e+00	0.00e+00	0.00e+00	0.00e+00	0.00e+00	0.00e+00	0.00e+00
FE-59	9.73e+00	9.73e+00	9.73e+00	9.73e+00	9.73e+00	9.73e+00	1.15e+01	9.73e+00
CO-58	1.35e+01	1.35e+01	1.35e+01	1.35e+01	1.35e+01	1.35e+01	1.59e+01	1.35e+01
CO-60	7.67e+02	7.67e+02	7.67e+02	7.67e+02	7.67e+02	7.67e+02	9.07e+02	7.67e+02
NI-63	0.00e+00	0.00e+00	0.00e+00	0.00e+00	0.00e+00	0.00e+00	0.00e+00	0.00e+00
NI-65	1.06e-02	1.06e-02	1.06e-02	1.06e-02	1.06e-02	1.06e-02	1.23e-02	1.06e-02
CU-64	2.17e-02	2.17e-02	2.17e-02	2.17e-02	2.17e-02	2.17e-02	2.46e-02	2.17e-02
ZN-65	2.67e+01	2.67e+01	2.67e+01	2.67e+01	2.67e+01	2.67e+01	3.07e+01	2.67e+01
ZN-69	0.00e+00	0.00e+00	0.00e+00	0.00e+00	0.00e+00	0.00e+00	0.00e+00	0.00e+00
BR-83	1.75e-04	1.75e-04	1.75e-04	1.75e-04	1.75e-04	1.75e-04	2.53e-04	1.75e-04
BR-84	7.27e-03	7.27e-03	7.27e-03	7.27e-03	7.27e-03	7.27e-03	8.47e-03	7.27e-03
BR-85	0.00e+00	0.00e+00	0.00e+00	0.00e+00	0.00e+00	0.00e+00	0.00e+00	0.00e+00
RB-86	3.21e-01	3.21e-01	3.21e-01	3.21e-01	3.21e-01	3.21e-01	3.67e-01	3.21e-01
RB-88	1.19e-03	1.19e-03	1.19e-03	1.19e-03	1.19e-03	1.19e-03	1.35e-03	1.19e-03
RB-89	4.40e-03	4.40e-03	4.40e-03	4.40e-03	4.40e-03	4.40e-03	5.28e-03	4.40e-03
SR-89	7.73e-04	7.73e-04	7.73e-04	7.73e-04	7.73e-04	7.73e-04	9.00e-04	7.73e-04
SR-90	0.00e+00	0.00e+00	0.00e+00	0.00e+00	0.00e+00	0.00e+00	0.00e+00	0.00e+00
SR-91	7.67e-02	7.67e-02	7.67e-02	7.67e-02	7.67e-02	7.67e-02	9.00e-02	7.67e-02
SR-92	2.78e-02	2.78e-02	2.78e-02	2.78e-02	2.78e-02	2.78e-02	3.09e-02	2.78e-02
Y-90	1.61e-04	1.61e-04	1.61e-04	1.61e-04	1.61e-04	1.61e-04	1.90e-04	1.61e-04
Y-91	3.84e-02	3.84e-02	3.84e-02	3.84e-02	3.84e-02	3.84e-02	4.32e-02	3.84e-02
Y-91M	3.59e-03	3.59e-03	3.59e-03	3.59e-03	3.59e-03	3.59e-03	4.15e-03	3.59e-03
Y-92	6.45e-03	6.45e-03	6.45e-03	6.45e-03	6.45e-03	6.45e-03	7.67e-03	6.45e-03
Y-93	6.56e-03	6.56e-03	6.56e-03	6.56e-03	6.56e-03	6.56e-03	9.00e-03	6.56e-03
ZR-95	8.73e+00	8.73e+00	8.73e+00	8.73e+00	8.73e+00	8.73e+00	1.01e+01	8.73e+00
ZR-97	1.06e-01	1.06e-01	1.06e-01	1.06e-01	1.06e-01	1.06e-01	1.23e-01	1.06e-01
NB-95	4.89e+00	4.89e+00	4.89e+00	4.89e+00	4.89e+00	4.89e+00	5.75e+00	4.89e+00
MO-99	1.43e-01	1.43e-01	1.43e-01	1.43e-01	1.43e-01	1.43e-01	1.65e-01	1.43e-01
TC-99M	6.59e-03	6.59e-03	6.59e-03	6.59e-03	6.59e-03	6.59e-03	7.53e-03	6.59e-03
TC-101	7.27e-04	7.27e-04	7.27e-04	7.27e-04	7.27e-04	7.27e-04	8.07e-04	7.27e-04
RU-103	3.87e+00	3.87e+00	3.87e+00	3.87e+00	3.87e+00	3.87e+00	4.52e+00	3.87e+00

DOSE COMMITMENT FACTORS
FOR THE SHORELINE PATHWAY
(Ref. 3.15)

Release Type: Liquid
Units: ((mrem/hr)/(μCi/ml))
Age Group: ADULT
Pathway: Shoreline Sediment (SHDp)

Nuclide	Bone	Liver	Thyroid	Kidney	Lung	GI-Lli	Skin	TB
RU-105	2.28e-02	2.28e-02	2.28e-02	2.28e-02	2.28e-02	2.28e-02	2.58e-02	2.28e-02
RU-106	1.51e+01	1.51e+01	1.51e+01	1.51e+01	1.51e+01	1.51e+01	1.81e+01	1.51e+01
AG-110M	1.23e+02	1.23e+02	1.23e+02	1.23e+02	1.23e+02	1.23e+02	1.43e+02	1.23e+02
TE-125M	5.55e-02	5.55e-02	5.55e-02	5.55e-02	5.55e-02	5.55e-02	7.60e-02	5.55e-02
TE-127	1.07e-04	1.07e-04	1.07e-04	1.07e-04	1.07e-04	1.07e-04	1.17e-04	1.07e-04
TE-127M	3.28e-03	3.28e-03	3.28e-03	3.28e-03	3.28e-03	3.28e-03	3.87e-03	3.28e-03
TE-129	9.40e-04	9.40e-04	9.40e-04	9.40e-04	9.40e-04	9.40e-04	1.11e-03	9.40e-04
TE-129M	7.07e-01	7.07e-01	7.07e-01	7.07e-01	7.07e-01	7.07e-01	8.27e-01	7.07e-01
TE-131	1.05e-03	1.05e-03	1.05e-03	1.05e-03	1.05e-03	1.05e-03	1.23e+00	1.05e-03
TE-131M	2.87e-01	2.87e-01	2.87e-01	2.87e-01	2.87e-01	2.87e-01	3.39e-01	2.87e-01
TE-132	1.51e-01	1.51e-01	1.51e-01	1.51e-01	1.51e-01	1.51e-01	1.78e-01	1.51e-01
I-130	1.97e-01	1.97e-01	1.97e-01	1.97e-01	1.97e-01	1.97e-01	2.39e-01	1.97e-01
I-131	6.16e-01	6.16e-01	6.16e-01	6.16e-01	6.16e-01	6.16e-01	7.47e-01	6.16e-01
I-132	4.45e-02	4.45e-02	4.45e-02	4.45e-02	4.45e-02	4.45e-02	5.24e-02	4.45e-02
I-133	8.80e-02	8.80e-02	8.80e-02	8.80e-02	8.80e-02	8.80e-02	1.07e-01	8.80e-02
I-134	1.60e-02	1.60e-02	1.60e-02	1.60e-02	1.60e-02	1.60e-02	1.90e-02	1.60e-02
I-135	9.07e-02	9.07e-02	9.07e-02	9.07e-02	9.07e-02	9.07e-02	1.05e-01	9.07e-02
CS-134	2.45e+02	2.45e+02	2.45e+02	2.45e+02	2.45e+02	2.45e+02	2.87e+02	2.45e+02
CS-136	5.40e+00	5.40e+00	5.40e+00	5.40e+00	5.40e+00	5.40e+00	6.12e+00	5.40e+00
CS-137	3.68e+02	3.68e+02	3.68e+02	3.68e+02	3.68e+02	3.68e+02	4.29e+02	3.68e+02
CS-138	1.29e-02	1.29e-02	1.29e-02	1.29e-02	1.29e-02	1.29e-02	1.47e-02	1.29e-02
BA-139	3.79e-03	3.79e-03	3.79e-03	3.79e-03	3.79e-03	3.79e-03	4.26e-03	3.79e-03
BA-140	7.33e-01	7.33e-01	7.33e-01	7.33e-01	7.33e-01	7.33e-01	8.40e-01	7.33e-01
BA-141	1.49e-03	1.49e-03	1.49e-03	1.49e-03	1.49e-03	1.49e-03	1.70e-03	1.49e-03
BA-142	1.61e-03	1.61e-03	1.61e-03	1.61e-03	1.61e-03	1.61e-03	1.83e-03	1.61e-03
LA-140	6.87e-01	6.87e-01	6.87e-01	6.87e-01	6.87e-01	6.87e-01	7.80e-01	6.87e-01
LA-142	2.72e-02	2.72e-02	2.72e-02	2.72e-02	2.72e-02	2.72e-02	3.26e-02	2.72e-02
CE-141	4.89e-01	4.89e-01	4.89e-01	4.89e-01	4.89e-01	4.89e-01	5.51e-01	4.89e-01
CE-143	8.27e-02	8.27e-02	8.27e-02	8.27e-02	8.27e-02	8.27e-02	9.40e-02	8.27e-02
CE-144	2.49e+00	2.49e+00	2.49e+00	2.49e+00	2.49e+00	2.49e+00	2.88e+00	2.49e+00
PR-143	0.00e+00	0.00e+00	0.00e+00	0.00e+00	0.00e+00	0.00e+00	0.00e+00	0.00e+00
PR-144	6.57e-05	6.57e-05	6.57e-05	6.57e-05	6.57e-05	6.57e-05	7.53e-05	6.57e-05
ND-147	3.01e-01	3.01e-01	3.01e-01	3.01e-01	3.01e-01	3.01e-01	3.61e-01	3.01e-01
W-187	8.40e-02	8.40e-02	8.40e-02	8.40e-02	8.40e-02	8.40e-02	9.80e-02	8.40e-02
NP-239	6.12e-02	6.12e-02	6.12e-02	6.12e-02	6.12e-02	6.12e-02	7.07e-02	6.12e-02

DOSE COMMITMENT FACTORS
FOR THE SHORELINE PATHWAY
(Ref. 3.15)

Release Type: Liquid
Units: ((mrem/hr)/(µCi/ml))
Age Group: TEEN
Pathway: Shoreline Sediment (SHDp)

Nuclide	Bone	Liver	Thyroid	Kidney	Lung	GI-Lli	Skin	TB
H-3	0.00e+00	0.00e+00	0.00e+00	0.00e+00	0.00e+00	0.00e+00	0.00e+00	0.00e+00
C-14	0.00e+00	0.00e+00	0.00e+00	0.00e+00	0.00e+00	0.00e+00	0.00e+00	0.00e+00
NA-24	2.39e+00	2.39e+00	2.39e+00	2.39e+00	2.39e+00	2.39e+00	2.77e+00	2.39e+00
P-32	0.00e+00	0.00e+00	0.00e+00	0.00e+00	0.00e+00	0.00e+00	0.00e+00	0.00e+00
CR-51	9.33e-01	9.33e-01	9.33e-01	9.33e-01	9.33e-01	9.33e-01	1.10e+00	9.33e-01
MN-54	2.77e+02	2.77e+02	2.77e+02	2.77e+02	2.77e+02	2.77e+02	3.25e+02	2.77e+02
MN-56	1.80e-01	1.80e-01	1.80e-01	1.80e-01	1.80e-01	1.80e-01	2.13e-01	1.80e-01
FE-55	0.00e+00	0.00e+00	0.00e+00	0.00e+00	0.00e+00	0.00e+00	0.00e+00	0.00e+00
FE-59	5.45e+01	5.45e+01	5.45e+01	5.45e+01	5.45e+01	5.45e+01	6.41e+01	5.45e+01
CO-58	7.60e+01	7.60e+01	7.60e+01	7.60e+01	7.60e+01	7.60e+01	8.87e+01	7.60e+01
CO-60	4.29e+03	4.29e+03	4.29e+03	4.29e+03	4.29e+03	4.29e+03	5.05e+03	4.29e+03
NI-63	0.00e+00	0.00e+00	0.00e+00	0.00e+00	0.00e+00	0.00e+00	0.00e+00	0.00e+00
NI-65	5.93e-02	5.93e-02	5.93e-02	5.93e-02	5.93e-02	5.93e-02	6.87e-02	5.93e-02
CU-64	1.21e-01	1.21e-01	1.21e-01	1.21e-01	1.21e-01	1.21e-01	1.37e-01	1.21e-01
ZN-65	1.49e+02	1.49e+02	1.49e+02	1.49e+02	1.49e+02	1.49e+02	1.72e+02	1.49e+02
ZN-69	0.00e+00	0.00e+00	0.00e+00	0.00e+00	0.00e+00	0.00e+00	0.00e+00	0.00e+00
BR-83	9.73e-04	9.73e-04	9.73e-04	9.73e-04	9.73e-04	9.73e-04	1.41e-03	9.73e-04
BR-84	4.05e-02	4.05e-02	4.05e-02	4.05e-02	4.05e-02	4.05e-02	4.72e-02	4.05e-02
BR-85	0.00e+00	0.00e+00	0.00e+00	0.00e+00	0.00e+00	0.00e+00	0.00e+00	0.00e+00
RB-86	1.79e+00	1.79e+00	1.79e+00	1.79e+00	1.79e+00	1.79e+00	2.05e+00	1.79e+00
RB-88	6.61e-03	6.61e-03	6.61e-03	6.61e-03	6.61e-03	6.61e-03	7.53e-03	6.61e-03
RB-89	2.45e-02	2.45e-02	2.45e-02	2.45e-02	2.45e-02	2.45e-02	2.95e-02	2.45e-02
SR-89	4.33e-03	4.33e-03	4.33e-03	4.33e-03	4.33e-03	4.33e-03	5.02e-03	4.33e-03
SR-90	0.00e+00	0.00e+00	0.00e+00	0.00e+00	0.00e+00	0.00e+00	0.00e+00	0.00e+00
SR-91	4.29e-01	4.29e-01	4.29e-01	4.29e-01	4.29e-01	4.29e-01	5.02e-01	4.29e-01
SR-92	1.55e-01	1.55e-01	1.55e-01	1.55e-01	1.55e-01	1.55e-01	1.73e-01	1.55e-01
Y-90	9.00e-04	9.00e-04	9.00e-04	9.00e-04	9.00e-04	9.00e-04	1.06e-03	9.00e-04
Y-91	2.15e-01	2.15e-01	2.15e-01	2.15e-01	2.15e-01	2.15e-01	2.41e-01	2.15e-01
Y-91M	2.01e-02	2.01e-02	2.01e-02	2.01e-02	2.01e-02	2.01e-02	2.32e-02	2.01e-02
Y-92	3.61e-02	3.61e-02	3.61e-02	3.61e-02	3.61e-02	3.61e-02	4.28e-02	3.61e-02
Y-93	3.67e-02	3.67e-02	3.67e-02	3.67e-02	3.67e-02	3.67e-02	5.01e-02	3.67e-02
ZR-95	4.89e+01	4.89e+01	4.89e+01	4.89e+01	4.89e+01	4.89e+01	5.67e+01	4.89e+01
ZR-97	5.91e-01	5.91e-01	5.91e-01	5.91e-01	5.91e-01	5.91e-01	6.87e-01	5.91e-01
NB-95	2.73e+01	2.73e+01	2.73e+01	2.73e+01	2.73e+01	2.73e+01	3.21e+01	2.73e+01
MO-99	8.00e-01	8.00e-01	8.00e-01	8.00e-01	8.00e-01	8.00e-01	9.27e-01	8.00e-01
TC-99M	3.68e-02	3.68e-02	3.68e-02	3.68e-02	3.68e-02	3.68e-02	4.21e-02	3.68e-02
TC-101	4.07e-03	4.07e-03	4.07e-03	4.07e-03	4.07e-03	4.07e-03	4.52e-03	4.07e-03
RU-103	2.17e+01	2.17e+01	2.17e+01	2.17e+01	2.17e+01	2.17e+01	2.53e+01	2.17e+01

DOSE COMMITMENT FACTORS
FOR THE SHORELINE PATHWAY
(Ref. 3.15)

Release Type: Liquid
Units: ((mrem/hr)/(μCi/ml))
Age Group: TEEN
Pathway: Shoreline Sediment (SHDp)

Nuclide	Bone	Liver	Thyroid	Kidney	Lung	GI-Lli	Skin	TB
RU-105	1.27e-01	1.27e-01	1.27e-01	1.27e-01	1.27e-01	1.27e-01	1.44e-01	1.27e-01
RU-106	8.47e+01	8.47e+01	8.47e+01	8.47e+01	8.47e+01	8.47e+01	1.01e+02	8.47e+01
AG-110M	6.87e+02	6.87e+02	6.87e+02	6.87e+02	6.87e+02	6.87e+02	8.00e+02	6.87e+02
TE-125M	3.10e-01	3.10e-01	3.10e-01	3.10e-01	3.10e-01	3.10e-01	4.25e-01	3.10e-01
TE-127	5.95e-04	5.95e-04	5.95e-04	5.95e-04	5.95e-04	5.95e-04	6.55e-04	5.95e-04
TE-127M	1.83e-02	1.83e-02	1.83e-02	1.83e-02	1.83e-02	1.83e-02	2.17e-02	1.83e-02
TE-129	5.24e-03	5.24e-03	5.24e-03	5.24e-03	5.24e-03	5.24e-03	6.20e-03	5.24e-03
TE-129M	3.95e+00	3.95e+00	3.95e+00	3.95e+00	3.95e+00	3.95e+00	4.62e+00	3.95e+00
TE-131	5.83e-03	5.83e-03	5.83e-03	5.83e-03	5.83e-03	5.83e-03	6.87e+00	5.83e-03
TE-131M	1.61e+00	1.61e+00	1.61e+00	1.61e+00	1.61e+00	1.61e+00	1.89e+00	1.61e+00
TE-132	8.47e-01	8.47e-01	8.47e-01	8.47e-01	8.47e-01	8.47e-01	9.93e-01	8.47e-01
I-130	1.10e+00	1.10e+00	1.10e+00	1.10e+00	1.10e+00	1.10e+00	1.34e+00	1.10e+00
I-131	3.44e+00	3.44e+00	3.44e+00	3.44e+00	3.44e+00	3.44e+00	4.17e+00	3.44e+00
I-132	2.49e-01	2.49e-01	2.49e-01	2.49e-01	2.49e-01	2.49e-01	2.93e-01	2.49e-01
I-133	4.90e-01	4.90e-01	4.90e-01	4.90e-01	4.90e-01	4.90e-01	5.95e-01	4.90e-01
I-134	8.93e-02	8.93e-02	8.93e-02	8.93e-02	8.93e-02	8.93e-02	1.06e-01	8.93e-02
I-135	5.05e-01	5.05e-01	5.05e-01	5.05e-01	5.05e-01	5.05e-01	5.89e-01	5.05e-01
CS-134	1.37e+03	1.37e+03	1.37e+03	1.37e+03	1.37e+03	1.37e+03	1.60e+03	1.37e+03
CS-136	3.01e+01	3.01e+01	3.01e+01	3.01e+01	3.01e+01	3.01e+01	3.42e+01	3.01e+01
CS-137	2.05e+03	2.05e+03	2.05e+03	2.05e+03	2.05e+03	2.05e+03	2.39e+03	2.05e+03
CS-138	7.20e-02	7.20e-02	7.20e-02	7.20e-02	7.20e-02	7.20e-02	8.20e-02	7.20e-02
BA-139	2.11e-02	2.11e-02	2.11e-02	2.11e-02	2.11e-02	2.11e-02	2.38e-02	2.11e-02
BA-140	4.10e+00	4.10e+00	4.10e+00	4.10e+00	4.10e+00	4.10e+00	4.69e+00	4.10e+00
BA-141	8.33e-03	8.33e-03	8.33e-03	8.33e-03	8.33e-03	8.33e-03	9.47e-03	8.33e-03
BA-142	8.93e-03	8.93e-03	8.93e-03	8.93e-03	8.93e-03	8.93e-03	1.02e-02	8.93e-03
LA-140	3.84e+00	3.84e+00	3.84e+00	3.84e+00	3.84e+00	3.84e+00	4.35e+00	3.84e+00
LA-142	1.52e-01	1.52e-01	1.52e-01	1.52e-01	1.52e-01	1.52e-01	1.82e-01	1.52e-01
CE-141	2.73e+00	2.73e+00	2.73e+00	2.73e+00	2.73e+00	2.73e+00	3.08e+00	2.73e+00
CE-143	4.62e-01	4.62e-01	4.62e-01	4.62e-01	4.62e-01	4.62e-01	5.25e-01	4.62e-01
CE-144	1.39e+01	1.39e+01	1.39e+01	1.39e+01	1.39e+01	1.39e+01	1.61e+01	1.39e+01
PR-143	0.00e+00	0.00e+00	0.00e+00	0.00e+00	0.00e+00	0.00e+00	0.00e+00	0.00e+00
PR-144	3.67e-04	3.67e-04	3.67e-04	3.67e-04	3.67e-04	3.67e-04	4.21e-04	3.67e-04
ND-147	1.68e+00	1.68e+00	1.68e+00	1.68e+00	1.68e+00	1.68e+00	2.01e+00	1.68e+00
W-187	4.70e-01	4.70e-01	4.70e-01	4.70e-01	4.70e-01	4.70e-01	5.46e-01	4.70e-01
NP-239	3.42e-01	3.42e-01	3.42e-01	3.42e-01	3.42e-01	3.42e-01	3.95e-01	3.42e-01

DOSE COMMITMENT FACTORS
FOR THE SHORELINE PATHWAY
(Ref. 3.15)

Release Type: Liquid
Units: ((mrem/hr)/(μCi/ml))
Age Group: CHILD
Pathway: Shoreline Sediment (SHDp)

Nuclide	Bone	Liver	Thyroid	Kidney	Lung	GI-Lli	Skin	TB
H-3	0.00e+00	0.00e+00	0.00e+00	0.00e+00	0.00e+00	0.00e+00	0.00e+00	0.00e+00
C-14	0.00e+00	0.00e+00	0.00e+00	0.00e+00	0.00e+00	0.00e+00	0.00e+00	0.00e+00
NA-24	4.99e-01	4.99e-01	4.99e-01	4.99e-01	4.99e-01	4.99e-01	5.79e-01	4.99e-01
P-32	0.00e+00	0.00e+00	0.00e+00	0.00e+00	0.00e+00	0.00e+00	0.00e+00	0.00e+00
CR-51	1.95e-01	1.95e-01	1.95e-01	1.95e-01	1.95e-01	1.95e-01	2.30e-01	1.95e-01
MN-54	5.79e+01	5.79e+01	5.79e+01	5.79e+01	5.79e+01	5.79e+01	6.80e+01	5.79e+01
MN-56	3.77e-02	3.77e-02	3.77e-02	3.77e-02	3.77e-02	3.77e-02	4.45e-02	3.77e-02
FE-55	0.00e+00	0.00e+00	0.00e+00	0.00e+00	0.00e+00	0.00e+00	0.00e+00	0.00e+00
FE-59	1.14e+01	1.14e+01	1.14e+01	1.14e+01	1.14e+01	1.14e+01	1.34e+01	1.14e+01
CO-58	1.58e+01	1.58e+01	1.58e+01	1.58e+01	1.58e+01	1.58e+01	1.85e+01	1.58e+01
CO-60	9.00e+02	9.00e+02	9.00e+02	9.00e+02	9.00e+02	9.00e+02	1.05e+03	9.00e+02
NI-63	0.00e+00	0.00e+00	0.00e+00	0.00e+00	0.00e+00	0.00e+00	0.00e+00	0.00e+00
NI-65	1.24e-02	1.24e-02	1.24e-02	1.24e-02	1.24e-02	1.24e-02	1.44e-02	1.24e-02
CU-64	2.53e-02	2.53e-02	2.53e-02	2.53e-02	2.53e-02	2.53e-02	2.87e-02	2.53e-02
ZN-65	3.12e+01	3.12e+01	3.12e+01	3.12e+01	3.12e+01	3.12e+01	3.59e+01	3.12e+01
ZN-69	0.00e+00	0.00e+00	0.00e+00	0.00e+00	0.00e+00	0.00e+00	0.00e+00	0.00e+00
BR-83	2.03e-04	2.03e-04	2.03e-04	2.03e-04	2.03e-04	2.03e-04	2.95e-04	2.03e-04
BR-84	8.47e-03	8.47e-03	8.47e-03	8.47e-03	8.47e-03	8.47e-03	9.87e-03	8.47e-03
BR-85	0.00e+00	0.00e+00	0.00e+00	0.00e+00	0.00e+00	0.00e+00	0.00e+00	0.00e+00
RB-86	3.75e-01	3.75e-01	3.75e-01	3.75e-01	3.75e-01	3.75e-01	4.29e-01	3.75e-01
RB-88	1.38e-03	1.38e-03	1.38e-03	1.38e-03	1.38e-03	1.38e-03	1.58e-03	1.38e-03
RB-89	5.13e-03	5.13e-03	5.13e-03	5.13e-03	5.13e-03	5.13e-03	6.16e-03	5.13e-03
SR-89	9.07e-04	9.07e-04	9.07e-04	9.07e-04	9.07e-04	9.07e-04	1.05e-03	9.07e-04
SR-90	0.00e+00	0.00e+00	0.00e+00	0.00e+00	0.00e+00	0.00e+00	0.00e+00	0.00e+00
SR-91	9.00e-02	9.00e-02	9.00e-02	9.00e-02	9.00e-02	9.00e-02	1.05e-01	9.00e-02
SR-92	3.24e-02	3.24e-02	3.24e-02	3.24e-02	3.24e-02	3.24e-02	3.61e-02	3.24e-02
Y-90	1.87e-04	1.87e-04	1.87e-04	1.87e-04	1.87e-04	1.87e-04	2.21e-04	1.87e-04
Y-91	4.48e-02	4.48e-02	4.48e-02	4.48e-02	4.48e-02	4.48e-02	5.04e-02	4.48e-02
Y-91M	4.19e-03	4.19e-03	4.19e-03	4.19e-03	4.19e-03	4.19e-03	4.85e-03	4.19e-03
Y-92	7.53e-03	7.53e-03	7.53e-03	7.53e-03	7.53e-03	7.53e-03	8.93e-03	7.53e-03
Y-93	7.67e-03	7.67e-03	7.67e-03	7.67e-03	7.67e-03	7.67e-03	1.05e-02	7.67e-03
ZR-95	1.02e+01	1.02e+01	1.02e+01	1.02e+01	1.02e+01	1.02e+01	1.19e+01	1.02e+01
ZR-97	1.23e-01	1.23e-01	1.23e-01	1.23e-01	1.23e-01	1.23e-01	1.44e-01	1.23e-01
NB-95	5.71e+00	5.71e+00	5.71e+00	5.71e+00	5.71e+00	5.71e+00	6.73e+00	5.71e+00
MO-99	1.67e-01	1.67e-01	1.67e-01	1.67e-01	1.67e-01	1.67e-01	1.93e-01	1.67e-01
TC-99M	7.67e-03	7.67e-03	7.67e-03	7.67e-03	7.67e-03	7.67e-03	8.80e-03	7.67e-03
TC-101	8.47e-04	8.47e-04	8.47e-04	8.47e-04	8.47e-04	8.47e-04	9.47e-04	8.47e-04
RU-103	4.52e+00	4.52e+00	4.52e+00	4.52e+00	4.52e+00	4.52e+00	5.27e+00	4.52e+00

DOSE COMMITMENT FACTORS
FOR THE SHORELINE PATHWAY
(Ref. 3.15)

Release Type: Liquid
Units: ((mrem/hr)/(μCi/ml))
Age Group: CHILD
Pathway: Shoreline Sediment (SHDp)

Nuclide	Bone	Liver	Thyroid	Kidney	Lung	GI-Lli	Skin	TB
RU-105	2.66e-02	2.66e-02	2.66e-02	2.66e-02	2.66e-02	2.66e-02	3.01e-02	2.66e-02
RU-106	1.76e+01	1.76e+01	1.76e+01	1.76e+01	1.76e+01	1.76e+01	2.11e+01	1.76e+01
AG-110M	1.43e+02	1.43e+02	1.43e+02	1.43e+02	1.43e+02	1.43e+02	1.67e+02	1.43e+02
TE-125M	6.48e-02	6.48e-02	6.48e-02	6.48e-02	6.48e-02	6.48e-02	8.87e-02	6.48e-02
TE-127	1.24e-04	1.24e-04	1.24e-04	1.24e-04	1.24e-04	1.24e-04	1.37e-04	1.24e-04
TE-127M	3.83e-03	3.83e-03	3.83e-03	3.83e-03	3.83e-03	3.83e-03	4.52e-03	3.83e-03
TE-129	1.09e-03	1.09e-03	1.09e-03	1.09e-03	1.09e-03	1.09e-03	1.29e-03	1.09e-03
TE-129M	8.27e-01	8.27e-01	8.27e-01	8.27e-01	8.27e-01	8.27e-01	9.67e-01	8.27e-01
TE-131	1.22e-03	1.22e-03	1.22e-03	1.22e-03	1.22e-03	1.22e-03	1.44e+00	1.22e-03
TE-131M	3.35e-01	3.35e-01	3.35e-01	3.35e-01	3.35e-01	3.35e-01	3.95e-01	3.35e-01
TE-132	1.77e-01	1.77e-01	1.77e-01	1.77e-01	1.77e-01	1.77e-01	2.08e-01	1.77e-01
I-130	2.30e-01	2.30e-01	2.30e-01	2.30e-01	2.30e-01	2.30e-01	2.79e-01	2.30e-01
I-131	7.20e-01	7.20e-01	7.20e-01	7.20e-01	7.20e-01	7.20e-01	8.73e-01	7.20e-01
I-132	5.20e-02	5.20e-02	5.20e-02	5.20e-02	5.20e-02	5.20e-02	6.12e-02	5.20e-02
I-133	1.03e-01	1.03e-01	1.03e-01	1.03e-01	1.03e-01	1.03e-01	1.25e-01	1.03e-01
I-134	1.87e-02	1.87e-02	1.87e-02	1.87e-02	1.87e-02	1.87e-02	2.21e-02	1.87e-02
I-135	1.05e-01	1.05e-01	1.05e-01	1.05e-01	1.05e-01	1.05e-01	1.23e-01	1.05e-01
CS-134	2.87e+02	2.87e+02	2.87e+02	2.87e+02	2.87e+02	2.87e+02	3.34e+02	2.87e+02
CS-136	6.30e+00	6.30e+00	6.30e+00	6.30e+00	6.30e+00	6.30e+00	7.13e+00	6.30e+00
CS-137	4.29e+02	4.29e+02	4.29e+02	4.29e+02	4.29e+02	4.29e+02	5.01e+02	4.29e+02
CS-138	1.50e-02	1.50e-02	1.50e-02	1.50e-02	1.50e-02	1.50e-02	1.71e-02	1.50e-02
BA-139	4.42e-03	4.42e-03	4.42e-03	4.42e-03	4.42e-03	4.42e-03	4.97e-03	4.42e-03
BA-140	8.60e-01	8.60e-01	8.60e-01	8.60e-01	8.60e-01	8.60e-01	9.80e-01	8.60e-01
BA-141	1.74e-03	1.74e-03	1.74e-03	1.74e-03	1.74e-03	1.74e-03	1.99e-03	1.74e-03
BA-142	1.87e-03	1.87e-03	1.87e-03	1.87e-03	1.87e-03	1.87e-03	2.13e-03	1.87e-03
LA-140	8.00e-01	8.00e-01	8.00e-01	8.00e-01	8.00e-01	8.00e-01	9.07e-01	8.00e-01
LA-142	3.17e-02	3.17e-02	3.17e-02	3.17e-02	3.17e-02	3.17e-02	3.81e-02	3.17e-02
CE-141	5.71e-01	5.71e-01	5.71e-01	5.71e-01	5.71e-01	5.71e-01	6.43e-01	5.71e-01
CE-143	9.67e-02	9.67e-02	9.67e-02	9.67e-02	9.67e-02	9.67e-02	1.10e-01	9.67e-02
CE-144	2.90e+00	2.90e+00	2.90e+00	2.90e+00	2.90e+00	2.90e+00	3.36e+00	2.90e+00
PR-143	0.00e+00	0.00e+00	0.00e+00	0.00e+00	0.00e+00	0.00e+00	0.00e+00	0.00e+00
PR-144	7.67e-05	7.67e-05	7.67e-05	7.67e-05	7.67e-05	7.67e-05	8.80e-05	7.67e-05
ND-147	3.51e-01	3.51e-01	3.51e-01	3.51e-01	3.51e-01	3.51e-01	4.21e-01	3.51e-01
W-187	9.80e-02	9.80e-02	9.80e-02	9.80e-02	9.80e-02	9.80e-02	1.14e-01	9.80e-02
NP-239	7.13e-02	7.13e-02	7.13e-02	7.13e-02	7.13e-02	7.13e-02	8.27e-02	7.13e-02

DOSE COMMITMENT FACTORS
FOR THE SHORELINE PATHWAY
(Ref. 3.15)

Release Type: Liquid
Units: ((mrem/hr)/(μCi/ml))
Age Group: INFANT
Pathway: Shoreline Sediment (SHDp)

Nuclide	Bone	Liver	Thyroid	Kidney	Lung	GI-Lli	Skin	TB
H-3	0.00e+00	0.00e+00	0.00e+00	0.00e+00	0.00e+00	0.00e+00	0.00e+00	0.00e+00
C-14	0.00e+00	0.00e+00	0.00e+00	0.00e+00	0.00e+00	0.00e+00	0.00e+00	0.00e+00
NA-24	0.00e+00	0.00e+00	0.00e+00	0.00e+00	0.00e+00	0.00e+00	0.00e+00	0.00e+00
P-32	0.00e+00	0.00e+00	0.00e+00	0.00e+00	0.00e+00	0.00e+00	0.00e+00	0.00e+00
CR-51	0.00e+00	0.00e+00	0.00e+00	0.00e+00	0.00e+00	0.00e+00	0.00e+00	0.00e+00
MN-54	0.00e+00	0.00e+00	0.00e+00	0.00e+00	0.00e+00	0.00e+00	0.00e+00	0.00e+00
MN-56	0.00e+00	0.00e+00	0.00e+00	0.00e+00	0.00e+00	0.00e+00	0.00e+00	0.00e+00
FE-55	0.00e+00	0.00e+00	0.00e+00	0.00e+00	0.00e+00	0.00e+00	0.00e+00	0.00e+00
FE-59	0.00e+00	0.00e+00	0.00e+00	0.00e+00	0.00e+00	0.00e+00	0.00e+00	0.00e+00
CO-58	0.00e+00	0.00e+00	0.00e+00	0.00e+00	0.00e+00	0.00e+00	0.00e+00	0.00e+00
CO-60	0.00e+00	0.00e+00	0.00e+00	0.00e+00	0.00e+00	0.00e+00	0.00e+00	0.00e+00
NI-63	0.00e+00	0.00e+00	0.00e+00	0.00e+00	0.00e+00	0.00e+00	0.00e+00	0.00e+00
NI-65	0.00e+00	0.00e+00	0.00e+00	0.00e+00	0.00e+00	0.00e+00	0.00e+00	0.00e+00
CU-64	0.00e+00	0.00e+00	0.00e+00	0.00e+00	0.00e+00	0.00e+00	0.00e+00	0.00e+00
ZN-65	0.00e+00	0.00e+00	0.00e+00	0.00e+00	0.00e+00	0.00e+00	0.00e+00	0.00e+00
ZN-69	0.00e+00	0.00e+00	0.00e+00	0.00e+00	0.00e+00	0.00e+00	0.00e+00	0.00e+00
BR-83	0.00e+00	0.00e+00	0.00e+00	0.00e+00	0.00e+00	0.00e+00	0.00e+00	0.00e+00
BR-84	0.00e+00	0.00e+00	0.00e+00	0.00e+00	0.00e+00	0.00e+00	0.00e+00	0.00e+00
BR-85	0.00e+00	0.00e+00	0.00e+00	0.00e+00	0.00e+00	0.00e+00	0.00e+00	0.00e+00
RB-86	0.00e+00	0.00e+00	0.00e+00	0.00e+00	0.00e+00	0.00e+00	0.00e+00	0.00e+00
RB-88	0.00e+00	0.00e+00	0.00e+00	0.00e+00	0.00e+00	0.00e+00	0.00e+00	0.00e+00
RB-89	0.00e+00	0.00e+00	0.00e+00	0.00e+00	0.00e+00	0.00e+00	0.00e+00	0.00e+00
SR-89	0.00e+00	0.00e+00	0.00e+00	0.00e+00	0.00e+00	0.00e+00	0.00e+00	0.00e+00
SR-90	0.00e+00	0.00e+00	0.00e+00	0.00e+00	0.00e+00	0.00e+00	0.00e+00	0.00e+00
SR-91	0.00e+00	0.00e+00	0.00e+00	0.00e+00	0.00e+00	0.00e+00	0.00e+00	0.00e+00
SR-92	0.00e+00	0.00e+00	0.00e+00	0.00e+00	0.00e+00	0.00e+00	0.00e+00	0.00e+00
Y-90	0.00e+00	0.00e+00	0.00e+00	0.00e+00	0.00e+00	0.00e+00	0.00e+00	0.00e+00
Y-91	0.00e+00	0.00e+00	0.00e+00	0.00e+00	0.00e+00	0.00e+00	0.00e+00	0.00e+00
Y-91M	0.00e+00	0.00e+00	0.00e+00	0.00e+00	0.00e+00	0.00e+00	0.00e+00	0.00e+00
Y-92	0.00e+00	0.00e+00	0.00e+00	0.00e+00	0.00e+00	0.00e+00	0.00e+00	0.00e+00
Y-93	0.00e+00	0.00e+00	0.00e+00	0.00e+00	0.00e+00	0.00e+00	0.00e+00	0.00e+00
ZR-95	0.00e+00	0.00e+00	0.00e+00	0.00e+00	0.00e+00	0.00e+00	0.00e+00	0.00e+00
ZR-97	0.00e+00	0.00e+00	0.00e+00	0.00e+00	0.00e+00	0.00e+00	0.00e+00	0.00e+00
NB-95	0.00e+00	0.00e+00	0.00e+00	0.00e+00	0.00e+00	0.00e+00	0.00e+00	0.00e+00
MO-99	0.00e+00	0.00e+00	0.00e+00	0.00e+00	0.00e+00	0.00e+00	0.00e+00	0.00e+00
TC-99M	0.00e+00	0.00e+00	0.00e+00	0.00e+00	0.00e+00	0.00e+00	0.00e+00	0.00e+00
TC-101	0.00e+00	0.00e+00	0.00e+00	0.00e+00	0.00e+00	0.00e+00	0.00e+00	0.00e+00
RU-103	0.00e+00	0.00e+00	0.00e+00	0.00e+00	0.00e+00	0.00e+00	0.00e+00	0.00e+00

DOSE COMMITMENT FACTORS
FOR THE SHORELINE PATHWAY
(Ref. 3.15)

Release Type: Liquid
Units: ((mrem/hr)/(μCi/ml))
Age Group: INFANT
Pathway: Shoreline Sediment (SHDp)

Nuclide	Bone	Liver	Thyroid	Kidney	Lung	GI-Lli	Skin	TB
RU-105	0.00e+00	0.00e+00	0.00e+00	0.00e+00	0.00e+00	0.00e+00	0.00e+00	0.00e+00
RU-106	0.00e+00	0.00e+00	0.00e+00	0.00e+00	0.00e+00	0.00e+00	0.00e+00	0.00e+00
AG-110M	0.00e+00	0.00e+00	0.00e+00	0.00e+00	0.00e+00	0.00e+00	0.00e+00	0.00e+00
TE-125M	0.00e+00	0.00e+00	0.00e+00	0.00e+00	0.00e+00	0.00e+00	0.00e+00	0.00e+00
TE-127	0.00e+00	0.00e+00	0.00e+00	0.00e+00	0.00e+00	0.00e+00	0.00e+00	0.00e+00
TE-127M	0.00e+00	0.00e+00	0.00e+00	0.00e+00	0.00e+00	0.00e+00	0.00e+00	0.00e+00
TE-129	0.00e+00	0.00e+00	0.00e+00	0.00e+00	0.00e+00	0.00e+00	0.00e+00	0.00e+00
TE-129M	0.00e+00	0.00e+00	0.00e+00	0.00e+00	0.00e+00	0.00e+00	0.00e+00	0.00e+00
TE-131	0.00e+00	0.00e+00	0.00e+00	0.00e+00	0.00e+00	0.00e+00	0.00e+00	0.00e+00
TE-131M	0.00e+00	0.00e+00	0.00e+00	0.00e+00	0.00e+00	0.00e+00	0.00e+00	0.00e+00
TE-132	0.00e+00	0.00e+00	0.00e+00	0.00e+00	0.00e+00	0.00e+00	0.00e+00	0.00e+00
I-130	0.00e+00	0.00e+00	0.00e+00	0.00e+00	0.00e+00	0.00e+00	0.00e+00	0.00e+00
I-131	0.00e+00	0.00e+00	0.00e+00	0.00e+00	0.00e+00	0.00e+00	0.00e+00	0.00e+00
I-132	0.00e+00	0.00e+00	0.00e+00	0.00e+00	0.00e+00	0.00e+00	0.00e+00	0.00e+00
I-133	0.00e+00	0.00e+00	0.00e+00	0.00e+00	0.00e+00	0.00e+00	0.00e+00	0.00e+00
I-134	0.00e+00	0.00e+00	0.00e+00	0.00e+00	0.00e+00	0.00e+00	0.00e+00	0.00e+00
I-135	0.00e+00	0.00e+00	0.00e+00	0.00e+00	0.00e+00	0.00e+00	0.00e+00	0.00e+00
CS-134	0.00e+00	0.00e+00	0.00e+00	0.00e+00	0.00e+00	0.00e+00	0.00e+00	0.00e+00
CS-136	0.00e+00	0.00e+00	0.00e+00	0.00e+00	0.00e+00	0.00e+00	0.00e+00	0.00e+00
CS-137	0.00e+00	0.00e+00	0.00e+00	0.00e+00	0.00e+00	0.00e+00	0.00e+00	0.00e+00
CS-138	0.00e+00	0.00e+00	0.00e+00	0.00e+00	0.00e+00	0.00e+00	0.00e+00	0.00e+00
BA-139	0.00e+00	0.00e+00	0.00e+00	0.00e+00	0.00e+00	0.00e+00	0.00e+00	0.00e+00
BA-140	0.00e+00	0.00e+00	0.00e+00	0.00e+00	0.00e+00	0.00e+00	0.00e+00	0.00e+00
BA-141	0.00e+00	0.00e+00	0.00e+00	0.00e+00	0.00e+00	0.00e+00	0.00e+00	0.00e+00
BA-142	0.00e+00	0.00e+00	0.00e+00	0.00e+00	0.00e+00	0.00e+00	0.00e+00	0.00e+00
LA-140	0.00e+00	0.00e+00	0.00e+00	0.00e+00	0.00e+00	0.00e+00	0.00e+00	0.00e+00
LA-142	0.00e+00	0.00e+00	0.00e+00	0.00e+00	0.00e+00	0.00e+00	0.00e+00	0.00e+00
CE-141	0.00e+00	0.00e+00	0.00e+00	0.00e+00	0.00e+00	0.00e+00	0.00e+00	0.00e+00
CE-143	0.00e+00	0.00e+00	0.00e+00	0.00e+00	0.00e+00	0.00e+00	0.00e+00	0.00e+00
CE-144	0.00e+00	0.00e+00	0.00e+00	0.00e+00	0.00e+00	0.00e+00	0.00e+00	0.00e+00
PR-143	0.00e+00	0.00e+00	0.00e+00	0.00e+00	0.00e+00	0.00e+00	0.00e+00	0.00e+00
PR-144	0.00e+00	0.00e+00	0.00e+00	0.00e+00	0.00e+00	0.00e+00	0.00e+00	0.00e+00
ND-147	0.00e+00	0.00e+00	0.00e+00	0.00e+00	0.00e+00	0.00e+00	0.00e+00	0.00e+00
W-187	0.00e+00	0.00e+00	0.00e+00	0.00e+00	0.00e+00	0.00e+00	0.00e+00	0.00e+00
NP-239	0.00e+00	0.00e+00	0.00e+00	0.00e+00	0.00e+00	0.00e+00	0.00e+00	0.00e+00

RADIOACTIVE DECAY CONSTANTS
(Ref. 3.13)

	Isotope	Half-life	Period (S.M.H.D.Y)	Decay Constant (Hr-1)		Isotope	Half-life	Period (S.M.H.D.Y)	Decay Constant (Hr-1)
1	H-3	12.28	Y	6.44E-06	38	Ru-103	39.35	D	7.34E-04
2	C-14	5730	Y	1.38E-08	39	Ru-105	4.44	H	1.56E-01
3	Na-24	15	H	4.62E-02	40	Ru-106	368.2	D	7.84E-06
4	P-32	14.29	D	2.02E-03	41	Ag-110m	249.85	D	1.16E-04
5	Cr-51	27.704	D	1.04E-03	42	Te-125m	58	D	4.98E-04
6	Mn-54	312.7	D	9.24E-05	43	Te-127m	109	D	2.65E-04
7	Mn-56	2.5785	H	2.69E-01	44	Te-127	9.35	H	7.41E-02
8	Fe-55	2.7	Y	2.93E-05	45	Te-129m	33.6	D	8.60E-04
9	Fe-59	44.63	D	6.47E-04	46	Te-129	69.6	M	5.98E-01
10	Co-58	70.8	D	4.08E-04	47	Te-131m	30	H	2.31E-02
11	Co-60	5.271	Y	1.50E-05	48	Te-131	25	M	1.66E+00
12	Ni-63	100.1	Y	7.90E-07	49	Te-132	78.2	H	8.86E-03
13	Ni-65	2.52	H	2.75E-01	50	I-130	12.36	H	5.61E-02
14	Cu-64	12.701	H	5.46E-02	51	I-131	8.04	D	3.59E-03
15	Zn-65	244.4	D	1.18E-04	52	I-132	2.3	H	3.01E-01
16	Zn-69	55.6	M	7.47E-01	53	I-133	20.8	H	3.33E-02
17	Br-83	2.39	H	2.90E-01	54	I-134	52.6	M	7.89E-01
18	Br-84	31.8	M	1.31E+00	55	I-135	6.61	H	1.05E-01
19	Br-85	172	S	1.45E+01	56	Cs-134	2.062	Y	3.84E-05
20	Rb-86	18.66	D	1.55E-03	57	Cs-136	13.16	D	2.19E-03
21	Rb-88	17.8	M	2.33E+00	58	Cs-137	30.17	Y	2.62E-06
22	Rb-89	15.44	M	2.69E+00	59	Cs-138	32.2	M	1.29E+00
23	Sr-89	50.55	D	5.71E-04	60	Ba-139	83.1	M	4.99E-01
24	Sr-90	28.6	Y	2.77E-06	61	Ba-140	12.789	D	2.26E-03
25	Sr-91	9.5	H	7.30E-02	62	Ba-141	18.27	M	2.27E+00
26	Sr-92	2.71	H	2.56E-01	63	Ba-142	10.7	M	3.88E+00
27	Y-90	64.1	H	1.08E-02	64	La-140	40.22	H	1.72E-02
28	Y-91m	49.71	M	8.35E-01	65	La-142	95.4	M	4.35E-01
29	Y-91	58.51	D	4.94E-04	66	Ce-141	32.5	D	8.89E-04
30	Y-92	3.54	H	1.96E-01	67	Ce-143	33	H	2.10E-02
31	Y-93	10.1	H	6.86E-02	68	Ce-144	284.3	D	1.02E-04
32	Zr-95	64.02	D	4.51E-04	69	Pr-143	13.56	D	2.13E-03
33	Zr-97	16.9	H	4.10E-02	70	Pr-144	17.28	M	2.40E+00
34	Nb-95	35.06	D	8.24E-04	71	Nd-147	10.98	D	2.63E-03
35	Mo-99	66.02	H	1.05E-02	72	W-187	23.83	H	2.91E-02
36	Tc-99m	6.02	H	1.15E-01	73	Np-239	2.355	D	1.23E-02
37	Tc-101	14.2	M	2.92E+00					

DILUTION FACTORS AND TRANSIT TIMES FOR SSES EFFLUENTS TO DANVILLE, PA

(Ref. 3.12 Appendix E-17, E-18)

RIVER DEPTH MEAS. AT ENV. LAB (FEET)	RIVER DEPTH MEAS. AT MCR (INCHES)	RIVER DISCHARGE (CFS)	LEADING EDGE (HOURS)	DILUTION FACTOR
1.5	144	500	68.7	136.4
1.6	145	530	67.8	140.1
1.8	148	600	66.3	147.3
2	150	670	64.8	155.5
2.2	152	730	63.3	164.5
2.4	155	780	61.8	173.9
2.5*	156*	825*	61.1*	179.1*
2.6	157	870	60.3	184.5
2.8	160	930	58.8	195.7
3	162	1000	57.2	208.3
3.2	164	1200	52.7	250.6
3.4	167	1400	48.2	291.5
3.5*	168*	1500*	45.9*	280.9*
3.6	169	1600	43.5	271.0
3.8	172	1800	39.0	250.6
4	174	2000	35.5	250.6
4.2	176	2280	35.2	254.5
4.4	179	2560	34.7	259.1
4.5*	180*	2730*	34.5*	261.4*
4.6	181	2900	34.2	263.9
4.8	184	3300	33.7	270.3
5	186	3700	33.0	277.8
5.2	188	4140	32.3	284.1
5.4	191	4580	31.7	292.4
5.5*	192*	4820*	31.4*	297.2*
5.6	193	5060	31.0	302.1
5.8	196	5580	30.2	312.5
6	198	6100	29.5	323.6
6.2	200	6780	28.5	339.0
6.4	203	7460	27.5	354.6
6.5*	204*	7890*	26.9*	366.3*
6.6	205	8320	26.2	378.8

* Interpolated value

DILUTION FACTORS AND TRANSIT TIMES FOR SSES EFFLUENTS TO DANVILLE, PA

(Ref. 3.12 Appendix E-17, E-18)

RIVER DEPTH MEAS. AT ENV. LAB (FEET)	RIVER DEPTH MEAS. AT MCR (INCHES)	RIVER DISCHARGE (CFS)	LEADING EDGE (HOURS)	DILUTION FACTOR
6.8	208	9360	24.7	413.2
7	210	10400	23.0	456.6
7.5	216	12500	20.0	588.2
8	222	14900	16.5	869.6
8.5	228	17500	15.3	980.4
9	234	20700	14.7	1071.8
9.5	240	24000	14.2	1173.7
10	246	27000	13.5	1285.3
10.5	252	30100	13.0	1373.6
11	258	34570	12.2	1567.4
11.5	264	38730	11.3	1795.3
12	270	42530	10.7	2057.6
12.5	276	46490	10.0	2398.1
13	282	50630	10.0	2597.4
13.5	288	54940	10.0	2832.9
14	294	59430	9.8	3067.5
14.5	300	64090	9.8	3311.3
15	306	68930	9.8	3558.7
15.5*	312*	74030*	9.8*	3802.3*
16	318	79130	9.8	4081.6
16.5*	324*	84580*	9.8*	4347.8*
17	330	90030	9.7	4651.2
17.5*	336*	95830*	9.7*	4926.1*
18	342	101630	9.7	5235.6
18.5*	348*	107780*	9.7*	5540.2*
19	354	113930	9.7	5882.4
19.5*	360*	120430*	9.6*	6192.0*
20	366	126930	9.5	6535.9
20.5*	372*	133780*	9.5*	6872.9*
21	378	140630	9.5	7246.4
21.5*	384*	147830*	9.4*	7604.6*
22	390	155030	9.3	8000.0

*Interpolated value

SITE SPECIFIC INFORMATION

Minimum Cooling Tower Blowdown Flow: 5000 gpm (Ref. 3.14)
Shorewidth Factor: 0.2 (Ref. 3.8 Table A-2)
Sediment exposure time: 131,400 hour (Ref. 3.8, Equation A-4)

USAGE FACTORS
(Ref. 3.8)

PATHWAY	INFANT	CHILD	TEEN	ADULT
Fish (kg/yr)	0	6.9	16	21
Potable Water (liter/yr)	330	510	510	730
Shoreline (hr/yr)	0	14	67	12

DILUTION FACTORS (DF)
(Ref. 3.12, Table 3 and Appendix E)

PATHWAY	LOCATION	DF
Fish	Outfall	15.9
Potable Water	Danville	388*
Shoreline	Outfall	15.9

*For estimating purposes (interpolated value from Ref. 3.12 Appendix E-17). Actual dilution factors at Danville, Pa., for various river levels located in Attachment E.

TRANSIT TIMES (Tp)
(Ref. 3.10)

PATHWAY	LOCATION	Tp (hr)
Fish	Outfall	25 **
Potable Water	Danville	25.8 *
Shoreline	Outfall	1

*For estimating purposes. Actual river transit times at Danville, Pa., for various river levels located in Attachment E.

**Includes one hour transit from outfall plus 24 hours to consumption.

CONSOLIDATED DOSE CALCULATION

The following equation consolidates the methodology as described in Section 6.0 (Regulatory Guide 1.109 methodology). The equation utilizes a dose commitment factor, which incorporates Regulatory Guide 1.109 parameters specific to each exposure pathway. The resultant dose commitment factor correlates dose to the radionuclide concentration received via the applicable exposure pathway.

The dose due to radionuclides released in liquid effluent to unrestricted areas during a specified time period via the potable water, fish and shoreline pathways is determined by the following:

$$R_{aipj} = \frac{DCF_{aipj} * Q_i * e^{-\lambda_i t_p}}{DF_p F} * 1 \text{ hour}/3600 \text{ sec}$$

Where:

R_{aipj}	=	Dose to organ j of individuals of age group a from nuclide i in the pathway p. (mrem)
DCF_{aipj}	=	Dose Commitment Factor for organ j of individuals of age group a from nuclide i in the pathway p. (mrem*ml/μCl*hr) *Dose Commitment Factors listed in Attachments A (Potable Water Pathway), B (Fish Pathway) and C (Shoreline Pathway) (Ref. 3.15).
Q_i	=	Activity Released of nuclide i (μCi)
λ_i	=	Radioactive decay constant of nuclide i (Attachment D) (hr^{-1})
t_p	=	Total time elapsed between release of the nuclides and ingestion of food or water (Attachment F) (hr).
DFp	=	Dilution Factor (default values in Attachment F, actual values based on current river depth at Main Control Room taken from Attachment E).
F	=	Flow rate in the liquid effluent (cooling tower blowdown flow in ml/sec)

The dilution factor, DFp, has been substituted for the mixing ratio, 1/Mp, in the above equation.

Pathway Dose Commitment Factor Derivation

A dose commitment factor (DCF) for each pathway is derived which incorporates standard parameters outlined in Section 6.0. The calculation of the individual dose commitment factors is as follows:

Potable water $DCF_{aipj} = 1.14e5 * U_{ap} * D_{aipj}$

Fish $DCF_{aipj} = 1.14e5 * U_{ap} * B_{ip} * D_{aipj}$

Shoreline $DCF_{aipj} = 1.14e5 * 100 * D_{aipj} * W * U_{ap} * T_i[1 - e^{-\lambda_i t_b}]$

Where: *1.14e5 = unit conversion (pCi*mL*yr)/(µCi*L*hr)*

DCF_{aipj} = *(mrem*mL)/(µCi*hr)*

B_{ip} = Equilibrium bioaccumulation factor for nuclide i in pathway p, expressed as the ratio of the concentration in biota (pCi/kg) to the radionuclide concentration in water (pCi/liter), i.e., liter/kg (Ref. 3.8 Table A-1)

D_{aipj} = Dose factor specific to a given age group a, radionuclide i, pathway p, and organ j, which can be used to calculate the radiation dose from ingestion of a radionuclide or from standing on contaminated ground (Ref. 3.8 Table E-6, E-11 through E-14) (mrem/pCi ingested or mrem/hr per pCi/m2)

U_{ap} = Usage factor that specifies the intake rate or exposure rate for an individual of age group a associated with pathway p (Attachment F) (kg/yr, l/yr or hr/yr)

λ_i = Radioactive decay constant of nuclide i (Attachment D) (hr-1)

W = shoreline width factor (Attachment F) (dimensionless)

t_b = Period of time shoreline is exposed to contaminated water (Attachment F) (hr)

T_i = Radioactive half-life of nuclide i (days).

MAXIMUM HYPOTHETICAL COMPOSITE DOSE FACTORS
(Ref. 3.16)

Composite Dose Factors: Maximum Hypothetical Adult (Page 1 of 2)
Dose Factor Units: mrem/Ci Released
Location: Danville (Water Ing.)/Outfall (Fish and Shoreline)/FIXED DILUTION

Usage (Uap) (kg/yr: FISH) =	21	Usage (Uap) (kg/yr: WATER) =	730
Usage (Uap) (hr/yr: SHORE) =	12	Dilution (1/Mp:SHORE) =	15.9
Dilution (1/Mp:FISH) =	15.9	Dilution (1/Mp:WATER) =	321
Transit time (tf) hrs. =	25	Transit time (tw) hrs. =	25.8
Transit time (tp) hrs. =	1	Transit time (tb) hrs. =	131400

	Isotope	Bone	Liver	T. Body	Thyroid	Kidney	Lung	GI-LLI	Skin
1	H-3	0.00E+00	3.59E-05	3.59E-05	3.59E-05	3.59E-05	3.59E-05	3.59E-05	0.00E+00
2	C-14	1.70E+00	3.41E-01	3.41E-01	3.41E-01	3.41E-01	3.41E-01	3.41E-01	0.00E+00
3	Na-24	7.09E-03	7.09E-03	7.12E-03	7.09E-03	7.09E-03	7.09E-03	7.09E-03	2.58E-05
4	P-32	7.18E+01	4.46E+00	2.77E+00	0.00E+00	0.00E+00	0.00E+00	8.07E+00	0.00E+00
5	Cr-51	0.00E+00	0.00E+00	7.72E-05	4.07E-05	1.50E-05	9.04E-05	1.71E-02	1.07E-05
6	Mn-54	0.00E+00	2.39E-01	4.82E-02	0.00E+00	7.10E-02	0.00E+00	7.31E-01	3.17E-03
7	Mn-56	0.00E+00	7.25E-06	2.63E-06	0.00E+00	9.21E-06	0.00E+00	2.31E-04	1.59E-06
8	Fe-55	3.64E-02	2.52E-02	5.87E-03	0.00E+00	0.00E+00	1.40E-02	1.44E-02	0.00E+00
9	Fe-59	5.66E-02	1.33E-01	5.15E-02	0.00E+00	0.00E+00	3.72E-02	4.43E-01	6.24E-04
10	Co-58	0.00E+00	4.97E-03	1.19E-02	0.00E+00	0.00E+00	0.00E+00	1.01E-01	8.64E-04
11	Co-60	0.00E+00	1.44E-02	7.37E-02	0.00E+00	0.00E+00	0.00E+00	2.71E-01	4.93E-02
12	Ni-63	1.72E+00	1.19E-01	5.78E-02	0.00E+00	0.00E+00	0.00E+00	2.49E-02	0.00E+00
13	Ni-65	7.20E-06	9.35E-07	8.66E-07	0.00E+00	0.00E+00	0.00E+00	2.37E-05	5.11E-07
14	Cu-64	0.00E+00	1.43E-04	6.84E-05	0.00E+00	3.61E-04	0.00E+00	1.22E-02	1.27E-06
15	Zn-65	1.26E+00	4.00E+00	1.81E+00	0.00E+00	2.68E+00	0.00E+00	2.52E+00	1.67E-03
16	Zn-69	2.11E-11	4.03E-11	2.80E-12	0.00E+00	2.62E-11	0.00E+00	6.06E-12	0.00E+00
17	Br-83	0.00E+00	0.00E+00	1.57E-06	0.00E+00	0.00E+00	0.00E+00	2.26E-06	1.03E-08
18	Br-84	0.00E+00	0.00E+00	1.07E-07	0.00E+00	0.00E+00	0.00E+00	1.51E-22	1.25E-07
19	Br-85	0.00E+00	0.00E+00	0.00E+00	0.00E+00	0.00E+00	0.00E+00	0.00E+00	0.00E+00
20	Rb-86	0.00E+00	5.29E+00	2.47E+00	0.00E+00	0.00E+00	0.00E+00	1.04E+00	2.00E-05
21	Rb-88	0.00E+00	0.00E+00	6.27E-09	0.00E+00	0.00E+00	0.00E+00	0.00E+00	7.17E-09
22	Rb-89	0.00E+00	0.00E+00	1.63E-08	0.00E+00	0.00E+00	0.00E+00	0.00E+00	1.96E-08
23	Sr-89	1.25E+00	0.00E+00	3.60E-02	0.00E+00	0.00E+00	0.00E+00	2.01E-01	4.89E-08
24	Sr-90	3.13E+01	0.00E+00	7.69E+00	0.00E+00	0.00E+00	0.00E+00	9.05E-01	0.00E+00
25	Sr-91	3.77E-03	0.00E+00	1.56E-04	0.00E+00	0.00E+00	0.00E+00	1.80E-02	4.55E-06
26	Sr-92	1.47E-05	0.00E+00	1.81E-06	0.00E+00	0.00E+00	0.00E+00	2.91E-04	1.30E-06
27	Y-90	2.55E-05	0.00E+00	6.94E-07	0.00E+00	0.00E+00	0.00E+00	2.71E-01	1.02E-08
28	Y-91m	2.64E-16	0.00E+00	8.49E-08	0.00E+00	0.00E+00	0.00E+00	7.74E-16	9.83E-08
29	Y-91	4.85E-04	0.00E+00	1.51E-05	0.00E+00	0.00E+00	0.00E+00	2.67E-01	2.35E-06
30	Y-92	2.18E-08	0.00E+00	2.90E-07	0.00E+00	0.00E+00	0.00E+00	3.82E-04	3.43E-07
31	Y-93	1.67E-06	0.00E+00	3.80E-07	0.00E+00	0.00E+00	0.00E+00	5.30E-02	4.56E-07
32	Zr-95	1.97E-05	6.31E-06	4.81E-04	0.00E+00	9.90E-06	0.00E+00	2.00E-02	5.53E-04
33	Zr-97	3.90E-07	7.87E-08	5.57E-06	0.00E+00	1.19E-07	0.00E+00	2.44E-02	6.44E-06
34	Nb-95	2.38E-02	1.33E-02	7.39E-03	0.00E+00	1.31E-02	0.00E+00	8.04E+01	3.13E-04

MAXIMUM HYPOTHETICAL COMPOSITE DOSE FACTORS
(Ref. 3.16)

Composite Dose Factors: Maximum Hypothetical Adult (Page 2 of 2)
Dose Factor Units: mrem/Ci Released
Location: Danville (Water Ing.)/Outfall (Fish and Shoreline)/FIXED DILUTION

	Isotope	Bone	Liver	T. Body	Thyroid	Kidney	Lung	GI-LLI	SKIN
35	Mo-99	0.00E+00	5.06E-03	9.70E-04	0.00E+00	1.15E-02	0.00E+00	1.17E-02	8.92E-06
36	Tc-99m	3.00E-08	8.47E-08	1.40E-06	0.00E+00	1.29E-06	4.15E-08	5.01E-05	3.66E-07
37	Tc-101	0.00E+00	0.00E+00	2.14E-09	0.00E+00	0.00E+00	0.00E+00	0.00E+00	2.37E-09
38	Ru-103	2.77E-04	0.00E+00	3.30E-04	0.00E+00	1.06E-03	0.00E+00	3.24E-02	2.46E-04
39	Ru-105	4.67E-07	0.00E+00	1.24E-06	0.00E+00	6.03E-06	0.00E+00	2.85E-04	1.20E-06
40	Ru-106	4.19E-03	0.00E+00	1.35E-03	0.00E+00	8.09E-03	0.00E+00	2.71E-01	9.87E-04
41	Ag-110m	8.36E-05	7.73E-05	6.74E-03	0.00E+00	1.52E-04	0.00E+00	3.16E-02	7.81E-03
42	Te-125m	1.39E-01	5.02E-02	1.86E-02	4.17E-02	5.63E-01	0.00E+00	5.53E-01	4.14E-06
43	Te-127m	3.52E-01	1.26E-01	4.29E-02	9.00E-02	1.43E+00	0.00E+00	1.18E+00	2.11E-07
44	Te-127	9.02E-04	3.24E-04	1.95E-04	6.68E-04	3.67E-03	0.00E+00	7.12E-02	5.93E-09
45	Te-129m	5.89E-01	2.20E-01	9.33E-02	2.02E-01	2.46E+00	0.00E+00	2.97E+00	4.50E-05
46	Te-129	1.61E-03	6.05E-04	4.27E-04	1.23E-03	6.76E-03	0.00E+00	1.21E-03	4.20E-05
47	Te-131m	5.08E-02	2.49E-02	2.07E-02	3.94E-02	2.52E-01	0.00E+00	2.47E+00	1.80E-05
48	Te-131	9.69E-22	4.05E-22	1.08E-08	7.97E-22	4.24E-21	0.00E+00	1.37E-22	1.28E-05
49	Te-132	1.06E-01	6.84E-02	6.42E-02	7.55E-02	6.58E-01	0.00E+00	3.23E+00	9.62E-06
50	I-130	4.04E-04	1.19E-03	4.80E-04	1.01E-01	1.86E-03	0.00E+00	1.02E-03	1.23E-05
51	I-131	8.28E-03	1.18E-02	6.82E-03	3.88E+00	2.03E-02	0.00E+00	3.13E-03	4.06E-05
52	I-132	2.31E-07	6.18E-07	2.01E-06	2.16E-05	9.85E-07	0.00E+00	1.16E-07	2.11E-06
53	I-133	1.34E-03	2.33E-03	7.16E-04	3.43E-01	4.07E-03	0.00E+00	2.10E-03	5.62E-06
54	I-134	5.95E-13	1.62E-12	3.96E-07	2.80E-11	2.57E-12	0.00E+00	1.41E-15	4.70E-07
55	I-135	6.96E-05	1.82E-04	7.17E-05	1.20E-02	2.92E-04	0.00E+00	2.06E-04	5.17E-06
56	Cs-134	1.62E+01	3.86E+01	3.15E+01	0.00E+00	1.25E+01	4.14E+00	6.75E-01	1.56E-02
57	Cs-136	1.61E+00	6.35E+00	4.57E+00	0.00E+00	3.53E+00	4.84E-01	7.21E-01	3.32E-04
58	Cs-137	2.08E+01	2.84E+01	1.86E+01	0.00E+00	9.65E+00	3.21E+00	5.50E-01	2.34E-02
59	Cs-138	1.46E-16	2.87E-16	1.93E-07	0.00E+00	2.11E-16	2.09E-17	1.23E-21	2.21E-07
60	Ba-139	2.46E-10	1.75E-13	1.25E-07	0.00E+00	1.64E-13	9.94E-14	4.36E-10	1.41E-07
61	Ba-140	1.43E-02	1.80E-05	9.77E-04	0.00E+00	6.11E-06	1.03E-05	2.94E-02	4.56E-05
62	Ba-141	0.00E+00	0.00E+00	8.39E-09	0.00E+00	0.00E+00	0.00E+00	0.00E+00	9.57E-09
63	Ba-142	0.00E+00	0.00E+00	1.81E-09	0.00E+00	0.00E+00	0.00E+00	0.00E+00	2.06E-09
64	La-140	5.65E-06	2.85E-06	3.75E-05	0.00E+00	0.00E+00	0.00E+00	2.09E-01	4.17E-05
65	La-142	8.26E-12	3.76E-12	9.60E-07	0.00E+00	0.00E+00	0.00E+00	2.74E-08	1.15E-06
66	Ce-141	3.25E-06	2.19E-06	2.68E-05	0.00E+00	1.02E-06	0.00E+00	8.39E-03	3.00E-05
67	Ce-143	3.42E-07	2.53E-04	4.44E-06	0.00E+00	1.11E-07	0.00E+00	9.46E-03	5.01E-06
68	Ce-144	1.73E-04	7.22E-05	1.45E-04	0.00E+00	4.28E-05	0.00E+00	5.84E-02	1.57E-04
69	Pr-143	3.04E-05	1.22E-05	1.51E-06	0.00E+00	7.03E-06	0.00E+00	1.33E-01	0.00E+00
70	Pr-144	0.00E+00	0.00E+00	3.24E-10	0.00E+00	0.00E+00	0.00E+00	0.00E+00	3.73E-10
71	Nd-147	2.05E-05	2.37E-05	1.77E-05	0.00E+00	1.39E-05	0.00E+00	1.14E-01	1.96E-05
72	W-187	7.79E-03	6.52E-03	2.28E-03	0.00E+00	0.00E+00	0.00E+00	2.13E+00	5.17E-06
73	Np-239	1.34E-06	1.31E-07	3.36E-06	0.00E+00	4.10E-07	0.00E+00	2.69E-02	3.81E-06

MAXIMUM HYPOTHETICAL COMPOSITE DOSE FACTORS
(Ref. 3.16)

Composite Dose Factors: Maximum Hypothetical Teen (Page 1 of 2)
Dose Factor Units: mrem/Ci Released
Location: Danville (Water Ing.)/Outfall (Fish and Shoreline)/FIXED DILUTION

Usage (Uap) (kg/yr: FISH) =	16	Usage (Uap) (kg/yr: WATER) =	510
Usage (Uap) (hr/yr: SHORE) =	67	Dilution (1/Mp:SHORE) =	15.9
Dilution (1/Mp:FISH) =	15.9	Dilution (1/Mp:WATER) =	321
Transit time (tf) hrs. =	25	Transit time (tw) hrs. =	25.8
Transit time (tp) hrs. =	1	Transit time (tb) hrs. =	131400

	Isotope	Bone	Liver	T. Body	Thyroid	Kidney	Lung	GI-LLI	Skin
1	H-3	0.00E+00	2.61E-05	2.61E-05	2.61E-05	2.61E-05	2.61E-05	2.61E-05	0.00E+00
2	C-14	1.85E+00	3.71E-01	3.71E-01	3.71E-01	3.71E-01	3.71E-01	3.71E-01	0.00E+00
3	Na-24	7.30E-03	7.30E-03	7.43E-03	7.30E-03	7.30E-03	7.30E-03	7.30E-03	1.44E-04
4	P-32	7.82E+01	4.84E+00	3.03E+00	0.00E+00	0.00E+00	0.00E+00	6.57E+00	0.00E+00
5	Cr-51	0.00E+00	0.00E+00	1.21E-04	3.90E-05	1.54E-05	1.00E-04	1.18E-02	5.98E-05
6	Mn-54	0.00E+00	2.35E-01	6.16E-02	0.00E+00	7.00E-02	0.00E+00	4.81E-01	1.77E-02
7	Mn-56	0.00E+00	7.59E-06	8.86E-06	0.00E+00	9.61E-06	0.00E+00	5.00E-04	8.88E-06
8	Fe-55	3.81E-02	2.70E-02	6.30E-03	0.00E+00	0.00E+00	1.71E-02	1.17E-02	0.00E+00
9	Fe-59	5.82E-02	1.36E-01	5.55E-02	0.00E+00	0.00E+00	4.29E-02	3.21E-01	3.49E-03
10	Co-58	0.00E+00	4.93E-03	1.55E-02	0.00E+00	0.00E+00	0.00E+00	6.79E-02	4.82E-03
11	Co-60	0.00E+00	1.44E-02	2.67E-01	0.00E+00	0.00E+00	0.00E+00	1.87E-01	2.75E-01
12	Ni-63	1.78E+00	1.26E-01	6.05E-02	0.00E+00	0.00E+00	0.00E+00	2.01E-02	0.00E+00
13	Ni-65	7.77E-06	9.93E-07	2.91E-06	0.00E+00	0.00E+00	0.00E+00	5.38E-05	2.85E-06
14	Cu-64	0.00E+00	1.50E-04	7.69E-05	0.00E+00	3.80E-04	0.00E+00	1.17E-02	7.08E-06
15	Zn-65	1.14E+00	3.96E+00	1.86E+00	0.00E+00	2.54E+00	0.00E+00	1.68E+00	9.35E-03
16	Zn-69	2.29E-11	4.37E-11	3.06E-12	0.00E+00	2.85E-11	0.00E+00	8.05E-11	0.00E+00
17	Br-83	0.00E+00	0.00E+00	1.74E-06	0.00E+00	0.00E+00	0.00E+00	0.00E+00	5.76E-08
18	Br-84	0.00E+00	0.00E+00	5.99E-07	0.00E+00	0.00E+00	0.00E+00	0.00E+00	6.98E-07
19	Br-85	0.00E+00	0.00E+00	0.00E+00	0.00E+00	0.00E+00	0.00E+00	0.00E+00	0.00E+00
20	Rb-86	0.00E+00	5.70E+00	2.68E+00	0.00E+00	0.00E+00	0.00E+00	8.43E-01	1.12E-04
21	Rb-88	0.00E+00	0.00E+00	3.50E-08	0.00E+00	0.00E+00	0.00E+00	0.00E+00	4.00E-08
22	Rb-89	0.00E+00	0.00E+00	9.11E-08	0.00E+00	0.00E+00	0.00E+00	0.00E+00	1.09E-07
23	Sr-89	1.36E+00	0.00E+00	3.89E-02	0.00E+00	0.00E+00	0.00E+00	1.62E-01	2.73E-07
24	Sr-90	2.60E+01	0.00E+00	6.43E+00	0.00E+00	0.00E+00	0.00E+00	7.30E-01	0.00E+00
25	Sr-91	4.07E-03	0.00E+00	1.84E-04	0.00E+00	0.00E+00	0.00E+00	1.85E-02	2.54E-05
26	Sr-92	1.58E-05	0.00E+00	7.22E-06	0.00E+00	0.00E+00	0.00E+00	4.03E-04	7.27E-06
27	Y-90	2.76E-05	0.00E+00	7.91E-07	0.00E+00	0.00E+00	0.00E+00	2.27E-01	5.71E-08
28	Y-91m	2.84E-16	0.00E+00	4.74E-07	0.00E+00	0.00E+00	0.00E+00	1.34E-14	5.49E-07
29	Y-91	5.24E-04	0.00E+00	2.57E-05	0.00E+00	0.00E+00	0.00E+00	2.15E-01	1.31E-05
30	Y-92	2.37E-08	0.00E+00	1.61E-06	0.00E+00	0.00E+00	0.00E+00	6.50E-04	1.92E-06
31	Y-93	1.81E-06	0.00E+00	1.91E-06	0.00E+00	0.00E+00	0.00E+00	5.53E-02	2.55E-06
32	Zr-95	1.97E-05	6.23E-06	2.66E-03	0.00E+00	9.15E-06	0.00E+00	1.44E-02	3.09E-03
33	Zr-97	4.07E-07	8.06E-08	3.09E-05	0.00E+00	1.22E-07	0.00E+00	2.18E-02	3.60E-05
34	Nb-95	2.40E-02	1.33E-02	8.81E-03	0.00E+00	1.29E-02	0.00E+00	5.69E+01	1.75E-03

MAXIMUM HYPOTHETICAL COMPOSITE DOSE FACTORS
(Ref. 3.16)

Composite Dose Factors: Maximum Hypothetical Teen (Page 2 of 2)
Dose Factor Units: mrem/Ci Released
Location: Danville (Water Ing.)/Outfall (Fish and Shoreline)/FIXED DILUTION

	Isotope	Bone	Liver	T. Body	Thyroid	Kidney	Lung	GI-LLI	SKIN
35	Mo-99	0.00E+00	5.33E-03	1.06E-03	0.00E+00	1.22E-02	0.00E+00	9.54E-03	4.98E-05
36	Tc-99m	3.05E-08	8.50E-08	2.89E-06	0.00E+00	1.27E-06	4.72E-08	5.58E-05	2.04E-06
37	Tc-101	0.00E+00	0.00E+00	1.19E-08	0.00E+00	0.00E+00	0.00E+00	0.00E+00	1.33E-08
38	Ru-103	2.88E-04	0.00E+00	1.30E-03	0.00E+00	1.01E-03	0.00E+00	2.40E-02	1.37E-03
39	Ru-105	4.98E-07	0.00E+00	6.11E-06	0.00E+00	6.28E-06	0.00E+00	4.02E-04	6.71E-06
40	Ru-106	4.50E-03	0.00E+00	5.16E-03	0.00E+00	8.67E-03	0.00E+00	2.16E-01	5.51E-03
41	Ag-110m	7.87E-05	7.45E-05	3.74E-02	0.00E+00	1.42E-04	0.00E+00	2.09E-02	4.36E-02
42	Te-125m	1.51E-01	5.43E-02	2.02E-02	4.21E-02	0.00E+00	0.00E+00	4.45E-01	2.31E-05
43	Te-127m	3.83E-01	1.36E-01	4.55E-02	9.11E-02	1.55E+00	0.00E+00	9.54E-01	1.18E-06
44	Te-127	9.87E-04	3.50E-04	2.12E-04	6.81E-04	4.00E-03	0.00E+00	7.62E-02	3.31E-08
45	Te-129m	6.36E-01	2.36E-01	1.01E-01	2.05E-01	2.66E+00	0.00E+00	2.39E+00	2.51E-04
46	Te-129	1.75E-03	6.52E-04	6.23E-04	1.25E-03	7.34E-03	0.00E+00	9.56E-03	2.34E-04
47	Te-131m	5.46E-02	2.62E-02	2.19E-02	3.94E-02	2.73E-01	0.00E+00	2.10E+00	1.01E-04
48	Te-131	1.05E-21	4.31E-22	6.05E-08	8.05E-22	4.57E-21	0.00E+00	8.58E-23	7.15E-05
49	Te-132	1.11E-01	7.06E-02	6.65E-02	7.44E-02	6.77E-01	0.00E+00	2.24E+00	5.37E-05
50	I-130	4.15E-04	1.20E-03	5.37E-04	9.80E-02	1.85E-03	0.00E+00	9.24E-04	6.88E-05
51	I-131	8.80E-03	1.23E-02	6.80E-03	3.59E+00	2.12E-02	0.00E+00	2.44E-03	2.26E-04
52	I-132	2.40E-07	6.29E-07	1.02E-05	2.12E-05	9.91E-07	0.00E+00	2.74E-07	1.18E-05
53	I-133	1.43E-03	2.43E-03	7.68E-04	3.40E-01	4.27E-03	0.00E+00	1.84E-03	3.14E-05
54	I-134	6.22E-13	1.65E-12	2.21E-06	2.75E-11	2.60E-12	0.00E+00	2.17E-14	2.63E-06
55	I-135	7.24E-05	1.86E-04	9.38E-05	1.20E-02	2.94E-04	0.00E+00	2.07E-04	2.89E-05
56	Cs-134	1.66E+01	3.91E+01	1.82E+01	0.00E+00	1.24E+01	4.74E+00	4.86E-01	8.70E-02
57	Cs-136	1.62E+00	6.36E+00	4.27E+00	0.00E+00	3.46E+00	5.45E-01	5.12E-01	1.86E-03
58	Cs-137	2.23E+01	2.96E+01	1.04E+01	0.00E+00	1.01E+01	3.91E+00	4.21E-01	1.31E-01
59	Cs-138	1.56E-16	2.99E-16	1.08E-06	0.00E+00	2.21E-16	2.57E-17	1.36E-19	1.23E-06
60	Ba-139	2.64E-10	1.85E-13	7.00E-07	0.00E+00	1.75E-13	1.28E-13	2.35E-09	7.88E-07
61	Ba-140	1.49E-02	1.82E-05	1.18E-03	0.00E+00	6.17E-06	1.22E-05	2.29E-02	2.55E-04
62	Ba-141	0.00E+00	0.00E+00	4.69E-08	0.00E+00	0.00E+00	0.00E+00	0.00E+00	5.34E-08
63	Ba-142	0.00E+00	0.00E+00	1.01E-08	0.00E+00	0.00E+00	0.00E+00	0.00E+00	1.15E-08
64	La-140	5.96E-06	2.93E-06	2.06E-04	0.00E+00	0.00E+00	0.00E+00	1.68E-01	2.33E-04
65	La-142	8.77E-12	3.89E-12	5.36E-06	0.00E+00	0.00E+00	0.00E+00	1.19E-07	6.43E-06
66	Ce-141	3.33E-06	2.22E-06	1.49E-04	0.00E+00	1.05E-06	0.00E+00	6.36E-03	1.67E-04
67	Ce-143	3.52E-07	2.56E-04	2.47E-05	0.00E+00	1.15E-07	0.00E+00	7.70E-03	2.80E-05
68	Ce-144	1.78E-04	7.35E-05	7.66E-04	0.00E+00	4.39E-05	0.00E+00	4.47E-02	8.74E-04
69	Pr-143	3.28E-05	1.31E-05	1.63E-06	0.00E+00	7.60E-06	0.00E+00	1.08E-01	0.00E+00
70	Pr-144	0.00E+00	0.00E+00	1.81E-09	0.00E+00	0.00E+00	0.00E+00	0.00E+00	2.08E-09
71	Nd-147	2.32E-05	2.52E-05	9.26E-05	0.00E+00	1.48E-05	0.00E+00	9.09E-02	1.09E-04
72	W-187	8.42E-03	6.86E-03	2.43E-03	0.00E+00	0.00E+00	0.00E+00	1.86E+00	2.89E-05
73	Np-239	1.49E-06	1.40E-07	1.85E-05	0.00E+00	4.40E-07	0.00E+00	2.26E-02	2.13E-05

MAXIMUM HYPOTHETICAL COMPOSITE DOSE FACTORS
(Ref. 3.16)

Composite Dose Factors: Maximum Hypothetical Child (Page 1 of 2)
Dose Factor Units: mrem/Ci Released
Location: Danville (Water Ing.)/Outfall (Fish and Shoreline)/FIXED DILUTION

Usage (Uap) (kg/yr: FISH) =	6.9	Usage (Uap) (kg/yr: WATER) =	510
Usage (Uap) (hr/yr: SHORE) =	14	Dilution (1/Mp:SHORE) =	15.9
Dilution (1/Mp:FISH) =	15.9	Dilution (1/Mp:WATER) =	321
Transit time (tf) hrs. =	25	Transit time (tw) hrs. =	25.8
Transit time (tp) hrs. =	1	Transit time (tb) hrs. =	131400

	Isotope	Bone	Liver	T. Body	Thyroid	Kidney	Lung	GI-LLI	Skin
1	H-3	0.00E+00	3.96E-05	3.96E-05	3.96E-05	3.96E-05	3.96E-05	3.96E-05	0.00E+00
2	C-14	2.38E+00	4.77E-01	4.77E-01	4.77E-01	4.77E-01	4.77E-01	4.77E-01	0.00E+00
3	Na-24	8.10E-03	8.10E-03	8.12E-03	8.10E-03	8.10E-03	8.10E-03	8.10E-03	3.01E-05
4	P-32	1.01E+02	4.72E+00	3.89E+00	0.00E+00	0.00E+00	0.00E+00	2.79E+00	0.00E+00
5	Cr-51	0.00E+00	0.00E+00	8.62E-05	4.20E-05	1.15E-05	7.66E-05	4.01E-03	1.25E-05
6	Mn-54	0.00E+00	1.84E-01	5.23E-02	0.00E+00	5.17E-02	0.00E+00	1.55E-01	3.69E-03
7	Mn-56	0.00E+00	6.95E-06	3.14E-06	0.00E+00	8.41E-06	0.00E+00	1.01E-03	1.85E-06
8	Fe-55	5.10E-02	2.71E-02	8.38E-03	0.00E+00	0.00E+00	1.53E-02	5.01E-03	0.00E+00
9	Fe-59	7.21E-02	1.17E-01	5.87E-02	0.00E+00	0.00E+00	3.38E-02	1.21E-01	7.28E-04
10	Co-58	0.00E+00	4.09E-03	1.34E-02	0.00E+00	0.00E+00	0.00E+00	2.39E-02	1.01E-03
11	Co-60	0.00E+00	1.21E-02	8.47E-02	0.00E+00	0.00E+00	0.00E+00	6.73E-02	5.75E-02
12	Ni-63	2.39E+00	1.28E-01	8.12E-02	0.00E+00	0.00E+00	0.00E+00	8.61E-03	0.00E+00
13	Ni-65	1.01E-05	9.50E-07	1.07E-06	0.00E+00	0.00E+00	0.00E+00	1.16E-04	5.96E-07
14	Cu-64	0.00E+00	1.43E-04	8.79E-05	0.00E+00	3.47E-04	0.00E+00	6.73E-03	1.48E-06
15	Zn-65	1.17E+00	3.12E+00	1.94E+00	0.00E+00	1.97E+00	0.00E+00	5.48E-01	1.95E-03
16	Zn-69	2.95E-11	4.26E-11	3.94E-12	0.00E+00	2.58E-11	0.00E+00	2.68E-09	0.00E+00
17	Br-83	0.00E+00	0.00E+00	2.21E-06	0.00E+00	0.00E+00	0.00E+00	0.00E+00	1.20E-08
18	Br-84	0.00E+00	0.00E+00	1.25E-07	0.00E+00	0.00E+00	0.00E+00	0.00E+00	1.46E-07
19	Br-85	0.00E+00	0.00E+00	0.00E+00	0.00E+00	0.00E+00	0.00E+00	0.00E+00	0.00E+00
20	Rb-86	0.00E+00	5.53E+00	3.40E+00	0.00E+00	0.00E+00	0.00E+00	3.56E-01	2.33E-05
21	Rb-88	0.00E+00	0.00E+00	7.31E-09	0.00E+00	0.00E+00	0.00E+00	0.00E+00	8.36E-09
22	Rb-89	0.00E+00	0.00E+00	1.90E-08	0.00E+00	0.00E+00	0.00E+00	0.00E+00	2.28E-08
23	Sr-89	1.88E+00	0.00E+00	5.36E-02	0.00E+00	0.00E+00	0.00E+00	7.26E-02	5.71E-08
24	Sr-90	2.45E+01	0.00E+00	6.21E+00	0.00E+00	0.00E+00	0.00E+00	3.30E-01	0.00E+00
25	Sr-91	5.55E-03	0.00E+00	2.14E-04	0.00E+00	0.00E+00	0.00E+00	1.22E-02	5.31E-06
26	Sr-92	2.13E-05	0.00E+00	2.22E-06	0.00E+00	0.00E+00	0.00E+00	4.03E-04	1.52E-06
27	Y-90	3.84E-05	0.00E+00	1.04E-06	0.00E+00	0.00E+00	0.00E+00	1.09E-01	1.19E-08
28	Y-91m	3.78E-16	0.00E+00	9.91E-08	0.00E+00	0.00E+00	0.00E+00	7.40E-13	1.15E-07
29	Y-91	7.30E-04	0.00E+00	2.20E-05	0.00E+00	0.00E+00	0.00E+00	9.72E-02	2.74E-06
30	Y-92	3.24E-08	0.00E+00	3.38E-07	0.00E+00	0.00E+00	0.00E+00	9.37E-04	4.00E-07
31	Y-93	2.50E-06	0.00E+00	4.58E-07	0.00E+00	0.00E+00	0.00E+00	3.73E-02	5.32E-07
32	Zr-95	3.42E-05	7.51E-06	5.63E-04	0.00E+00	1.08E-05	0.00E+00	7.84E-03	6.45E-04
33	Zr-97	7.34E-07	1.06E-07	6.52E-06	0.00E+00	1.52E-07	0.00E+00	1.61E-02	7.51E-06
34	Nb-95	2.83E-02	1.10E-02	8.19E-03	0.00E+00	1.04E-02	0.00E+00	2.04E+01	3.65E-04

MAXIMUM HYPOTHETICAL COMPOSITE DOSE FACTORS
(Ref. 3.16)

Composite Dose Factors: Maximum Hypothetical Child (Page 2 of 2)
Dose Factor Units: mrem/Ci Released
Location: Danville (Water Ing.)/Outfall (Fish and Shoreline)/FIXED DILUTION

	Isotope	Bone	Liver	T. Body	Thyroid	Kidney	Lung	GI-LLI	SKIN
35	Mo-99	0.00E+00	5.97E-03	1.49E-03	0.00E+00	1.27E-02	0.00E+00	4.94E-03	1.04E-05
36	Tc-99m	4.07E-08	7.99E-08	1.70E-06	0.00E+00	1.16E-06	4.06E-08	4.55E-05	4.27E-07
37	Tc-101	0.00E+00	0.00E+00	2.49E-09	0.00E+00	0.00E+00	0.00E+00	0.00E+00	2.77E-09
38	Ru-103	4.20E-04	0.00E+00	4.07E-04	0.00E+00	1.06E-03	0.00E+00	1.09E-02	2.87E-04
39	Ru-105	7.37E-07	0.00E+00	1.50E-06	0.00E+00	6.48E-06	0.00E+00	4.81E-04	1.40E-06
40	Ru-106	6.83E-03	0.00E+00	1.81E-03	0.00E+00	9.22E-03	0.00E+00	1.06E-01	1.15E-03
41	Ag-110m	1.37E-04	9.26E-05	7.89E-03	0.00E+00	1.73E-04	0.00E+00	1.10E-02	9.11E-03
42	Te-125m	1.95E-01	5.27E-02	2.59E-02	5.46E-02	0.00E+00	0.00E+00	1.88E-01	4.83E-06
43	Te-127m	4.96E-01	1.34E-01	5.89E-02	1.19E-01	1.41E+00	0.00E+00	4.02E-01	2.46E-07
44	Te-127	1.27E-03	3.44E-04	2.73E-04	8.82E-04	3.63E-03	0.00E+00	4.98E-02	6.91E-09
45	Te-129m	8.24E-01	2.30E-01	1.28E-01	2.66E-01	2.42E+00	0.00E+00	1.00E+00	5.25E-05
46	Te-129	2.27E-03	6.33E-04	5.79E-04	1.62E-03	6.63E-03	0.00E+00	1.41E-01	4.90E-05
47	Te-131m	6.98E-02	2.41E-02	2.57E-02	4.97E-02	2.34E-01	0.00E+00	9.79E-01	2.10E-05
48	Te-131	1.34E-21	4.09E-22	1.26E-08	1.03E-21	4.06E-21	0.00E+00	7.05E-21	1.49E-05
49	Te-132	1.40E-01	6.19E-02	7.48E-02	9.01E-02	5.75E-01	0.00E+00	6.23E-01	1.12E-05
50	I-130	5.69E-04	1.15E-03	6.04E-04	1.27E-01	1.72E-03	0.00E+00	5.38E-04	1.44E-05
51	I-131	1.26E-02	1.26E-02	7.21E-03	4.18E+00	2.07E-02	0.00E+00	1.12E-03	4.73E-05
52	I-132	3.27E-07	6.01E-07	2.37E-06	2.79E-05	9.20E-07	0.00E+00	7.08E-07	2.46E-06
53	I-133	2.05E-03	2.53E-03	9.62E-04	4.70E-01	4.22E-03	0.00E+00	1.02E-03	6.55E-06
54	I-134	8.23E-13	1.53E-12	4.62E-07	3.52E-11	2.34E-12	0.00E+00	1.01E-12	5.49E-07
55	I-135	1.00E-04	1.80E-04	9.03E-05	1.59E-02	2.76E-04	0.00E+00	1.37E-04	6.03E-06
56	Cs-134	2.01E+01	3.29E+01	6.96E+00	0.00E+00	1.02E+01	3.66E+00	1.77E-01	1.82E-02
57	Cs-136	1.91E+00	5.25E+00	3.39E+00	0.00E+00	2.79E+00	4.17E-01	1.84E-01	3.88E-04
58	Cs-137	2.80E+01	2.68E+01	3.99E+00	0.00E+00	8.75E+00	3.15E+00	1.68E-01	2.73E-02
59	Cs-138	1.98E-16	2.75E-16	2.25E-07	0.00E+00	1.93E-16	2.08E-17	1.26E-16	2.57E-07
60	Ba-139	4.32E-10	2.31E-13	1.46E-07	0.00E+00	2.01E-13	1.36E-13	2.49E-08	1.65E-07
61	Ba-140	2.57E-02	2.25E-05	1.55E-03	0.00E+00	7.34E-06	1.34E-05	1.30E-02	5.32E-05
62	Ba-141	0.00E+00	0.00E+00	9.79E-09	0.00E+00	0.00E+00	0.00E+00	0.00E+00	1.12E-08
63	Ba-142	0.00E+00	0.00E+00	2.11E-09	0.00E+00	0.00E+00	0.00E+00	0.00E+00	2.41E-09
64	La-140	8.04E-06	2.81E-06	4.39E-05	0.00E+00	0.00E+00	0.00E+00	7.83E-02	4.86E-05
65	La-142	1.17E-11	3.73E-12	1.12E-06	0.00E+00	0.00E+00	0.00E+00	7.38E-07	1.34E-06
66	Ce-141	7.74E-06	3.86E-06	3.16E-05	0.00E+00	1.69E-06	0.00E+00	4.82E-03	3.50E-05
67	Ce-143	8.14E-07	4.41E-04	5.21E-06	0.00E+00	1.85E-07	0.00E+00	6.47E-03	5.85E-06
68	Ce-144	4.14E-04	1.30E-04	1.80E-04	0.00E+00	7.19E-05	0.00E+00	3.38E-02	1.83E-04
69	Pr-143	4.57E-05	1.37E-05	2.27E-06	0.00E+00	7.43E-06	0.00E+00	4.93E-02	0.00E+00
70	Pr-144	0.00E+00	0.00E+00	3.78E-10	0.00E+00	0.00E+00	0.00E+00	0.00E+00	4.35E-10
71	Nd-147	3.20E-05	2.60E-05	2.10E-05	0.00E+00	1.42E-05	0.00E+00	4.11E-02	2.28E-05
72	W-187	1.07E-02	6.33E-03	2.84E-03	0.00E+00	0.00E+00	0.00E+00	8.89E-01	6.03E-06
73	Np-239	2.25E-06	1.62E-07	3.95E-06	0.00E+00	4.68E-07	0.00E+00	1.20E-02	4.45E-06

MAXIMUM HYPOTHETICAL WATER INGESTION
DOSE FACTORS - INFANT
(Ref. 3.16)

Water Ingestion Dose Factors: Maximum Hypothetical Infant (Page 1 of 2)
Dose Factor Units: mrem/Ci Released
Location: Danville Receiver/FIXED DILUTION

Usage (Uap) (kg/yr: WATER) = 330
Transit time (WATER) hrs. = 25.8
Dilution (1/Mp:WATER) = 321

	Isotope	Bone	Liver	T. Body	Thyroid	Kidney	Lung	GI-LLI
1	H-3	0.00E+00	3.12E-05	3.12E-05	3.12E-05	3.12E-05	3.12E-05	3.12E-05
2	C-14	2.40E-03	5.13E-04	5.13E-04	5.13E-04	5.13E-04	5.13E-04	5.13E-04
3	Na-24	3.11E-04	3.11E-04	3.11E-04	3.11E-04	3.11E-04	3.11E-04	3.11E-04
4	P-32	1.64E-01	9.63E-03	6.34E-03	0.00E+00	0.00E+00	0.00E+00	2.21E-03
5	Cr-51	0.00E+00	0.00E+00	1.39E-06	9.08E-07	1.98E-07	1.77E-06	4.06E-05
6	Mn-54	0.00E+00	2.01E-03	4.56E-04	0.00E+00	4.46E-04	0.00E+00	7.40E-04
7	Mn-56	0.00E+00	8.07E-08	1.39E-08	0.00E+00	6.93E-08	0.00E+00	7.33E-06
8	Fe-55	1.41E-03	9.10E-04	2.43E-04	0.00E+00	0.00E+00	4.45E-04	1.16E-04
9	Fe-59	3.07E-03	5.37E-03	2.11E-03	0.00E+00	0.00E+00	1.59E-03	2.56E-03
10	Co-58	0.00E+00	3.61E-04	9.01E-04	0.00E+00	0.00E+00	0.00E+00	9.00E-04
11	Co-60	0.00E+00	1.09E-03	2.59E-03	0.00E+00	0.00E+00	0.00E+00	2.61E-03
12	Ni-63	6.43E-02	3.98E-03	2.23E-03	0.00E+00	0.00E+00	0.00E+00	1.98E-04
13	Ni-65	3.95E-07	4.47E-08	2.03E-08	0.00E+00	0.00E+00	0.00E+00	3.40E-06
14	Cu-64	0.00E+00	1.51E-05	7.00E-06	0.00E+00	2.56E-05	0.00E+00	3.10E-04
15	Zn-65	1.86E-03	6.38E-03	2.94E-03	0.00E+00	3.09E-03	0.00E+00	5.39E-03
16	Zn-69	4.09E-14	7.36E-14	5.48E-15	0.00E+00	3.06E-14	0.00E+00	6.00E-12
17	Br-83	0.00E+00	0.00E+00	2.07E-08	0.00E+00	0.00E+00	0.00E+00	0.00E+00
18	Br-84	0.00E+00	0.00E+00	9.19E-20	0.00E+00	0.00E+00	0.00E+00	0.00E+00
19	Br-85	0.00E+00	0.00E+00	0.00E+00	0.00E+00	0.00E+00	0.00E+00	0.00E+00
20	Rb-86	0.00E+00	1.66E-02	8.19E-03	0.00E+00	0.00E+00	0.00E+00	4.24E-04
21	Rb-88	0.00E+00	0.00E+00	0.00E+00	0.00E+00	0.00E+00	0.00E+00	0.00E+00
22	Rb-89	0.00E+00	0.00E+00	0.00E+00	0.00E+00	0.00E+00	0.00E+00	0.00E+00
23	Sr-89	2.51E-01	0.00E+00	7.20E-03	0.00E+00	0.00E+00	0.00E+00	5.16E-03
24	Sr-90	1.88E+00	0.00E+00	4.78E-01	0.00E+00	0.00E+00	0.00E+00	2.34E-02
25	Sr-91	7.72E-04	0.00E+00	2.79E-05	0.00E+00	0.00E+00	0.00E+00	9.14E-04
26	Sr-92	2.65E-06	0.00E+00	9.85E-08	0.00E+00	0.00E+00	0.00E+00	2.86E-05
27	Y-90	6.67E-06	0.00E+00	1.79E-07	0.00E+00	0.00E+00	0.00E+00	9.21E-03
28	Y-91m	3.62E-17	0.00E+00	1.23E-18	0.00E+00	0.00E+00	0.00E+00	1.21E-13
29	Y-91	1.13E-04	0.00E+00	3.01E-06	0.00E+00	0.00E+00	0.00E+00	8.11E-03
30	Y-92	4.96E-09	0.00E+00	1.40E-10	0.00E+00	0.00E+00	0.00E+00	9.47E-05
31	Y-93	4.20E-07	0.00E+00	1.14E-08	0.00E+00	0.00E+00	0.00E+00	3.31E-03
32	Zr-95	2.07E-05	5.03E-06	3.57E-06	0.00E+00	5.42E-06	0.00E+00	2.51E-03
33	Zr-97	5.21E-07	8.94E-08	4.08E-08	0.00E+00	9.01E-08	0.00E+00	5.70E-03
34	Nb-95	4.17E-06	1.72E-06	9.93E-07	0.00E+00	1.23E-06	0.00E+00	1.45E-03
35	Mo-99	0.00E+00	2.63E-03	5.13E-04	0.00E+00	3.93E-03	0.00E+00	8.66E-04

MAXIMUM HYPOTHETICAL WATER INGESTION
DOSE FACTORS - INFANT
(Ref. 3.16)

Water Ingestion Dose Factors: Maximum Hypothetical Infant (Page 2 of 2)
Dose Factor Units: mrem/Ci Released
Location: Danville Receiver/FIXED DILUTION

	Isotope	Bone	Liver	T. Body	Thyroid	Kidney	Lung	GI-LLI
36	Tc-99m	9.98E-09	2.06E-08	2.65E-07	0.00E+00	2.22E-07	1.08E-08	5.98E-06
37	Tc-101	0.00E+00	0.00E+00	0.00E+00	0.00E+00	0.00E+00	0.00E+00	0.00E+00
38	Ru-103	1.47E-04	0.00E+00	4.93E-05	0.00E+00	3.07E-04	0.00E+00	1.79E-03
39	Ru-105	2.46E-07	0.00E+00	8.27E-08	0.00E+00	1.81E-06	0.00E+00	9.77E-05
40	Ru-106	2.44E-03	0.00E+00	3.05E-04	0.00E+00	2.88E-03	0.00E+00	1.85E-02
41	Ag-110m	1.01E-04	7.35E-05	4.86E-05	0.00E+00	1.05E-04	0.00E+00	3.81E-03
42	Te-125m	2.33E-03	7.80E-04	3.15E-04	7.85E-04	0.00E+00	0.00E+00	1.11E-03
43	Te-127m	5.89E-03	1.95E-03	7.13E-04	1.70E-03	1.45E-02	0.00E+00	2.38E-03
44	Te-127	1.50E-05	5.02E-06	3.22E-06	1.22E-05	3.65E-05	0.00E+00	3.15E-04
45	Te-129m	9.92E-03	3.40E-03	1.53E-03	3.81E-03	2.48E-02	0.00E+00	5.92E-03
46	Te-129	2.82E-05	9.71E-06	6.58E-06	2.36E-05	7.01E-05	0.00E+00	2.25E-03
47	Te-131m	8.49E-04	3.42E-04	2.82E-04	6.93E-04	2.35E-03	0.00E+00	5.76E-03
48	Te-131	4.46E-24	1.65E-24	1.25E-24	3.98E-24	1.14E-23	0.00E+00	1.80E-22
49	Te-132	1.68E-03	8.31E-04	7.75E-04	1.23E-03	5.20E-03	0.00E+00	3.07E-03
50	I-130	1.43E-04	3.15E-04	1.26E-04	3.53E-02	3.46E-04	0.00E+00	6.75E-05
51	I-131	3.32E-03	3.91E-03	1.72E-03	1.28E+00	4.57E-03	0.00E+00	1.40E-04
52	I-132	7.07E-08	1.44E-07	5.11E-08	6.73E-06	1.60E-07	0.00E+00	1.16E-07
53	I-133	5.37E-04	7.81E-04	2.29E-04	1.42E-01	9.19E-04	0.00E+00	1.32E-04
54	I-134	1.27E-13	2.60E-13	9.25E-14	6.06E-12	2.91E-13	0.00E+00	2.69E-13
55	I-135	2.47E-05	4.91E-05	1.79E-05	4.40E-03	5.47E-05	0.00E+00	1.78E-05
56	Cs-134	3.82E-02	7.12E-02	7.19E-03	0.00E+00	1.83E-02	7.52E-03	1.94E-04
57	Cs-136	4.40E-03	1.29E-02	4.83E-03	0.00E+00	5.16E-03	1.05E-03	1.96E-04
58	Cs-137	5.29E-02	6.20E-02	4.39E-03	0.00E+00	1.66E-02	6.73E-03	1.94E-04
59	Cs-138	1.76E-19	2.86E-19	1.39E-19	0.00E+00	1.43E-19	2.23E-20	4.57E-19
60	Ba-139	2.26E-10	1.50E-13	6.55E-12	0.00E+00	9.02E-14	9.09E-14	1.43E-08
61	Ba-140	1.64E-02	1.64E-05	8.43E-04	0.00E+00	3.88E-06	1.00E-05	4.02E-03
62	Ba-141	0.00E+00	0.00E+00	0.00E+00	0.00E+00	0.00E+00	0.00E+00	0.00E+00
63	Ba-142	0.00E+00	0.00E+00	0.00E+00	0.00E+00	0.00E+00	0.00E+00	0.00E+00
64	La-140	1.37E-06	5.41E-07	1.39E-07	0.00E+00	0.00E+00	0.00E+00	6.35E-03
65	La-142	1.49E-12	5.47E-13	1.31E-13	0.00E+00	0.00E+00	0.00E+00	9.28E-08
66	Ce-141	7.80E-06	4.76E-06	5.60E-07	0.00E+00	1.47E-06	0.00E+00	2.46E-03
67	Ce-143	8.73E-07	5.79E-04	6.61E-08	0.00E+00	1.69E-07	0.00E+00	3.38E-03
68	Ce-144	3.01E-04	1.23E-04	1.69E-05	0.00E+00	4.99E-05	0.00E+00	1.73E-02
69	Pr-143	7.80E-06	2.92E-06	3.87E-07	0.00E+00	1.08E-06	0.00E+00	4.12E-03
70	Pr-144	0.00E+00	0.00E+00	0.00E+00	0.00E+00	0.00E+00	0.00E+00	0.00E+00
71	Nd-147	5.24E-06	5.38E-06	3.30E-07	0.00E+00	2.08E-06	0.00E+00	3.41E-03
72	W-187	4.32E-05	3.01E-05	1.04E-05	0.00E+00	0.00E+00	0.00E+00	1.77E-03
73	Np-239	8.20E-07	7.34E-08	4.15E-08	0.00E+00	1.46E-07	0.00E+00	2.12E-03

PROCEDURE CHANGE PROCESS FORM

1. PCAF NO. 2003- 7237 | 2. PAGE 1 OF 3 | 3. PROC. NO. ODCM-QA-006 REV. 1

4. FORMS REVISED - ___ R___ , - ___ R___ , - ___ R___ , - ___ R___ , - ___ R___ , - ___ R___

5. PROCEDURE TITLE
TOTAL DOSE CALCULATIONS

6. REQUESTED CHANGE
PERIODIC REVIEW ☒ NO ☐ YES
INCORPORATE PCAFS ☒ NO ☐ YES # _____ # _____ # _____ # _____
REVISION ☐ PCAF ☒ DELETION ☐ (CHECK ONE ONLY)

7. SUMMARY OF / REASON FOR CHANGE
The change being made is the addition of the Nuclear Emergency Planning group to the "RECOMMENDED REVIEWS" section on the procedure cover page.

This change to ODCM-QA-006 is an administrative correction and does not decrease the level of effluent control or the accuracy and/or reliability of dose calculations or setpoint determinations as required by 10CFR20.1302, 40CFR190, 10CFR50.36a and 10CFR50 App. I.

Continued ☐

8. DETERMINE COMMITTEE REVIEW REQUIREMENTS
(Refer to Section 6.1.4)
PORC REVIEW REQ'D? ☒ NO ☐ YES

9. PORC MTG# N/A

BLOCKS 11 THRU 16 ARE ON PAGE 2 OF FORM

17. Francis J. Hickey / 1141 / 3/24/03
PREPARER (Print or Type) / ETN / DATE

18. COMMUNICATION OF CHANGE REQUIRED?
☒ NO ☐ YES (TYPE) _____

19. Raymond E. Doebler 3/24/03
RESPONSIBLE SUPERVISOR / DATE

SIGNATURE ATTESTS THAT RESPONSIBLE SUPERVISOR HAS CONDUCTED QADR AND TECHNICAL REVIEW UNLESS OTHERWISE DOCUMENTED IN BLOCK 16 OR ATTACHED REVIEW FORMS. CROSS DISCIPLINE REVIEW (IF REQUIRED) HAS BEEN COMPLETED BY SIGNATURE IN BLOCK 16 OR ATTACHED REVIEW FORMS.

20. N/A
FUM APPROVAL / DATE

21. RESPONSIBLE APPROVER
ENTER N/A IF FUM HAS APPROVAL AUTHORITY
N/A
INITIALS / DATE

RECEIVED
MAR 25 2003
DOCUMENT CONTROL SERVICES - SSES

PROCEDURE CHANGE PROCESS FORM

1. PCAF NO. 2003-7237 | 2. PAGE 2 OF 3 | 3. PROC. NO. ODCM-QA-006 REV. 1

11. This question documents the outcome of the 50.59 and 72.48 Review required by NDAP-QA-0726. Either 11a, b, c or d must be checked "YES" and the appropriate form attached or referenced.
    - a. This change is an Administrative Correction for which 50.59 and 72.48 are not applicable. ☒ YES ☒ N/A
    - b. This change is a change to any surveillance, maintenance or administrative procedure for which 50.59 and 72.48 are not applicable. ☐ YES ☒ N/A
    - c. This change is bounded by a 50.59/72.48 Screen/Evaluation, therefore, no new 50.59/72.48 Evaluation is required. ☐ YES ☒ N/A
      Screen/Evaluation No. _____
    - d. 50.59 and/or 72.48 are applicable to this change and a 50.59/72.48 Screen/Evaluation is attached. ☐ YES ☒ N/A
12. This change is consistent with the FSAR or an FSAR change is required. ☒ YES
    Change Request No. _____
13. Should this change be reviewed for potential effects on Training Needs or Material? If YES, enter an Action Item @ NIMS/Action/Gen Work Mech/PICN ☐ YES ☒ NO
14. Is a Surveillance Procedure Review Checklist required per NDAP-QA-0722? ☐ YES ☒ NO
15. Is a Special, Infrequent or Complex Test/Evolution Analysis Form required per NDAP-QA-0320? (SICT/E form does not need to be attached.) ☐ YES ☒ NO

16. Reviews may be documented below or by attaching Document Review Forms NDAP-QA-0101-1.

REVIEW	REVIEWED BY WITH NO COMMENTS	DATE
QADR		
TECHNICAL REVIEW		
REACTOR ENGINEERING/NUCLEAR FUELS *		
IST **		
OPERATIONS		
NUCLEAR SYSTEMS ENGINEERING		
NUCLEAR MODIFICATIONS		
MAINTENANCE		
HEALTH PHYSICS		
NUCLEAR TECHNOLOGY		
CHEMISTRY		
OTHER _____		

* Required for changes that affect, or have potential for affecting core reactivity, nuclear fuel, core power level indication or impact the thermal power heat balance. ([58])

** Required for changes to Section XI Inservice Test Acceptance Criteria.

PCAF # - 2003-1231
Page 3 of 3

PROCEDURE COVER SHEET

PPL SUSQUEHANNA, LLC	NUCLEAR DEPARTMENT PROCEDURE	
TOTAL DOSE CALCULATIONS		ODCM-QA-006 Revision 1 Page 1 of 6

QUALITY CLASSIFICATION:	APPROVAL CLASSIFICATION:
☒ QA Program ☐ Non-QA Program	☒ Plant ☐ Non-Plant ☐ Instruction

EFFECTIVE DATE: 9-20-2002

PERIODIC REVIEW FREQUENCY: N/A

PERIODIC REVIEW DUE DATE: N/A

RECOMMENDED REVIEWS:

Nuclear Emergency Planning

Procedure Owner: Francis J. Hickey

Responsible Supervisor: Chemistry Supervisor - SSES

Responsible FUM: Chemistry Supervisor - SSES

Responsible Approver: Vice President – Nuclear Operations

PCAF

PROCEDURE REVISION SUMMARY

TITLE: TOTAL DOSE CALCULATIONS

Most of the revisions described below are editorial in nature. The changes made do not reduce or compromise the level of effluent control or the accuracy and/or reliability of dose calculations or setpoint determinations as required by 10CFR20.1302, 40CFR190, 10CFR50.36a and 10CFR50, Appendix I. Additionally, the changes outlined below: (1) do not alter the conduct of the radiological environmental monitoring program, (2) do not change the radioactive effluent controls and radiological environmental monitoring activities, and (3) do not change the information to be included in the Annual Radiological Environmental Operating and Radioactive Effluent Release Reports.

Various sections have been revised and/or deleted to incorporate the change in the computer program used by PPL Susquehanna, LLC in support of offsite dose assessment (LADTAP and GASPAR replaced by RETDAS) from routine liquid and gaseous effluents. This revision to ODCM-QA-006 does not change the dose assessment methodology, but deletes specific references to computer programs utilized to perform offsite dose assessment.

1. Removed redundant steps and gray shading incorporated for the transition to ITS.

2. Revised Sections 6.1, 6.2 and 6.3 to remove redundancy in defining the responsible personnel for performance of offsite dose calculations.

3. Deleted the Approval and Date stamp at the bottom of each page due to no longer required per ODCM-QA-002, Rev. 1.

4. Various sections revised to reflect SSES organizational changes.

TABLE OF CONTENTS

SECTION		PAGE
1.0	PURPOSE	4
2.0	POLICY/DISCUSSION	4
3.0	REFERENCES	4
4.0	RESPONSIBILITIES	5
	4.1 Chemistry Supervisor - SSES	5
5.0	DEFINITIONS	5
6.0	PROCEDURE	5
	6.1 Waterborne Effluent	5
	6.2 Airborne Effluent	5
	6.3 Total Dose	6
7.0	RECORDS	6

1.0 PURPOSE

The purpose of this procedure is to provide the methodology and parameters to determine the total dose to a member of the public from the fuel cycle in the vicinity of the SSES site as required by 40CFR190.

It also ensures that radioactive effluents which result in calculated doses exceeding twice the objectives of 10CFR50, Appendix I, are identified, evaluated and reported.

This procedure constitutes part of the SSES Offsite Dose Calculation Manual (ODCM), which is a licensing basis document.

2.0 POLICY/DISCUSSION

2.1 The cumulative dose to any member of the public due to radioactive releases from the SSES site is determined by summing the calculated doses to critical organs from airborne and liquid effluent sources.

2.2 For all dose calculations from airborne effluents, the deposition rate used in the analysis should be at the receiver location of the individual being evaluated, not the highest calculated annual average relative concentration or relative deposition rate for any area at or beyond the site boundary as given in Attachment B of ODCM-QA-004.

2.3 The direct radiation to any member of the public due to operations at SSES should be determined from the environmental monitoring program results.

2.4 The total dose to members of the public shall include any dose received from activities occurring within the site boundary. Use of realistic occupancy factors for determination of this dose is allowed.

3.0 REFERENCES

3.1 TR 3.11.3, Total Dose.

3.2 10CFR50 Appendix I, Numerical Guides for Design Objectives and Limiting Conditions for Operation to Meet the Criterion "As Low as is Reasonably Achievable" for Radioactive Material in Light-water Cooled Nuclear Power Reactor Effluents.

3.3 40CFR190, Environmental radiation protection standards for nuclear power operations.

3.4 ODCM-QA-004, Airborne Effluent Dose Calculations.

3.5 ODCM-QA-005, Waterborne Effluent Dose Calculations.

3.6 Regulatory Guide 1.109, Rev. 1, October, 1977, Calculation of Annual Doses to Man from Routine Releases of Reactor Effluents for the Purposes of Evaluating Compliance with 10 CFR 50, Appendix I.

4.0 RESPONSIBILITIES

4.1 Chemistry Supervisor - SSES

4.1.1 Ensures adequacy and correctness of methodology to be used to determine the total dose to a member of the public from the fuel cycle.

4.1.2 Ensures dose calculations necessary for fulfillment of SSES Technical Requirements Surveillances are performed.

4.1.3 Ensures methodology and parameters to be used to determine the total dose to a member of the public from the fuel cycle are developed.

5.0 DEFINITIONS

5.1 MEMBER(S) OF THE PUBLIC - Shall include all persons who are not occupationally associated with the plant. This category does not include employees of the utility, its contractors, or vendors. Also excluded from this category are persons who enter the site to service equipment or to make deliveries. This category does include persons who use portions of the site for recreational, occupational, or other purposes not associated with the plant.

6.0 PROCEDURE

6.1 Waterborne Effluent

The annual dose to critical organs of a maximally exposed individual for the liquid effluents shall be determined by using the methodology outlined in Section 6.1 of ODCM-QA-005.

6.2 Airborne Effluent

6.2.1 The annual dose to critical organs of a real individual for the noble gases released in the gaseous effluents shall be determined by using Equation 3 of ODCM-QA-004 modified by replacing M_i with K_i for the whole-body dose and using Equation 4 modified by replacing N_i by $[L_i + (1.11\ M_i)(S_F)]$ for the skin dose. Values of K_i, L_i, and M_i are obtained from Attachment A of ODCM-QA-004.

$$D_g = 3.17x10^{-8} \sum_i K_i (X/Q)_v (Q_{iv})(S_F) \qquad \text{(Eq. 1)}$$

$$D_b = 3.17x10^{-8} \sum_i [L_i + (1.11 M_i)(S_F)](X/Q)_v (Q_{iv}) \qquad \text{(Eq. 2)}$$

6.2.2 The annual dose to critical organs of a real individual for the radionuclides other than noble gases released in the gaseous effluents shall be determined by using Equation 6 of ODCM-QA-004.

6.3 Total Dose

6.3.1 The total dose to a member of the public shall be calculated by summing the direct dose determined by the environmental monitoring program, the airborne dose contribution at the point of interest determined per §6.2, and the total dose from liquid effluent determined per §6.1.

6.3.2 If the results of the calculated dose exceed twice the objectives of 10CFR50, Appendix I, it shall be determined whether the limits of 40CFR90 have been exceeded. If the 40CFR190 limits have been exceeded, a special report shall be prepared and submitted to the NRC within 30 days addressing the actions of TR 3.11.3.

7.0 RECORDS

None.

PROCEDURE CHANGE PROCESS FORM

1. PCAF NO. 2003-1304	2. PAGE 1 OF 3	3. PROC. NO. ODCM-QA-007 REV. 1

4. FORMS REVISED - ___ R___, - ___ R___, - ___ R___, - ___ R___, - ___ R___, - ___ R___

5. PROCEDURE TITLE
Radioactive Waste Treatment Systems

6. REQUESTED CHANGE
PERIODIC REVIEW ☒ NO ☐ YES
INCORPORATE PCAFS ☒ NO ☐ YES # _____ # _____ # _____ # _____
REVISION ☐ PCAF ☒ DELETION ☐ (CHECK ONE ONLY)

7. SUMMARY OF / REASON FOR CHANGE
Based upon 50.59 Evaluation E-01-22, the Primary Coolant Degasifier Filter Exhaust System is no longer required to perform the function listed in this procedure and therefore this change removes it.

This change to ODCM-QA-007 does not decrease the level of effluent control or the accuracy and/or reliability of dose calculations or setpoint determinations as required by 10CFR20.1302, 40CFR190, 10CFR50.36a and 10CFR50 App. I.

Continued ☐

8. DETERMINE COMMITTEE REVIEW REQUIREMENTS
(Refer to Section 6.1.4)
PORC REVIEW REQ'D? ☐ NO ☒ YES

9. PORC MTG# 03-09-04

BLOCKS 11 THRU 16 ARE ON PAGE 2 OF FORM

17. Chris Boschetti (CB) / 3410 / 04/18/2003
PREPARER (Print or Type) / ETN / DATE

18. COMMUNICATION OF CHANGE REQUIRED?
☒ NO ☐ YES (TYPE) _____

19. Raymond E. Diehler 8/5/2003
RESPONSIBLE SUPERVISOR / DATE

SIGNATURE ATTESTS THAT RESPONSIBLE SUPERVISOR HAS CONDUCTED QADR AND TECHNICAL REVIEW UNLESS OTHERWISE DOCUMENTED IN BLOCK 16 OR ATTACHED REVIEW FORMS. CROSS DISCIPLINE REVIEW (IF REQUIRED) HAS BEEN COMPLETED BY SIGNATURE IN BLOCK 16 OR ATTACHED REVIEW FORMS.

20. Bruce Rhoads 8/5/03
FUM APPROVAL / DATE

21. RESPONSIBLE APPROVER
JP 09/09/03
INITIALS / DATE

ENTER N/A IF FUM HAS APPROVAL AUTHORITY

RECEIVED
SEP 11 2003
DOCUMENT CONTROL SERVICES - SSES

PROCEDURE CHANGE PROCESS FORM

1. PCAF NO. 2003-1304	2. PAGE 2 OF 3	3. PROC. NO. ODCM-QA-007 REV. 1

11. This question documents the outcome of the 50.59 and 72.48 Review required by NDAP-QA-0726. Either 11a, b, c or d must be checked "YES" and the appropriate form attached or referenced.
    a. This change is an Administrative Correction for which 50.59 and 72.48 are not applicable. ☐ YES ☒ N/A
    b. This change is a change to any surveillance, maintenance or administrative procedure for which 50.59 and 72.48 are not applicable. ☐ YES ☒ N/A
    c. This change is bounded by a 50.59/72.48 Screen/Evaluation, therefore, no new 50.59/72.48 Evaluation is required. ☒ YES ☐ N/A
    Screen/Evaluation No. 50.59 Evaluation # E-01-22
    d. 50.59 and/or 72.48 are applicable to this change and a 50.59/72.48 Screen/Evaluation is attached. ☐ YES ☒ N/A
12. This change is consistent with the FSAR or an FSAR change is required. ☒ YES
    Change Request No. LDCNs 2003-3566 & 3567
13. Should this change be reviewed for potential effects on Training Needs or Material? If YES, enter an Action Item @ NIMS/Action/Gen Work Mech/PICN ☐ YES ☒ NO
14. Is a Surveillance Procedure Review Checklist required per NDAP-QA-0722? ☐ YES ☒ NO
15. Is a Special, Infrequent or Complex Test/Evolution Analysis Form required per NDAP-QA-0320? (SICT/E form does not need to be attached.) ☐ YES ☒ NO

16. Reviews may be documented below or by attaching Document Review Forms NDAP-QA-0101-1.

REVIEW	REVIEWED BY WITH NO COMMENTS	DATE
QADR		
TECHNICAL REVIEW		
REACTOR ENGINEERING/NUCLEAR FUELS *		
IST **		
OPERATIONS		
NUCLEAR SYSTEMS ENGINEERING		
NUCLEAR MODIFICATIONS		
MAINTENANCE		
HEALTH PHYSICS		
NUCLEAR TECHNOLOGY		
CHEMISTRY		
OTHER _____		

* Required for changes that affect, or have potential for affecting core reactivity, nuclear fuel, core power level indication or impact the thermal power heat balance. ([58])

** Required for changes to Section XI Inservice Test Acceptance Criteria.

PROCEDURE CHANGE PROCESS FORM

1. PCAF NO. 2003-7236	2. PAGE 1 OF 3	3. PROC. NO. ODCM-QA-007 REV. 1

4. FORMS REVISED - ___ R___ , - ___ R___ , - ___ R___ , - ___ R___ , - ___ R___ , - ___ R___

5. PROCEDURE TITLE
RADIOACTIVE WASTE TREATMENT SYSTEMS

6. REQUESTED CHANGE
PERIODIC REVIEW ☒ NO ☐ YES
INCORPORATE PCAFS ☒ NO ☐ YES # _____ # _____ # _____ # _____
REVISION ☐ PCAF ☒ DELETION ☐ (CHECK ONE ONLY)

7. SUMMARY OF / REASON FOR CHANGE
The change being made is the addition of the Nuclear Emergency Planning group to the "RECOMMENDED REVIEWS" section on the procedure cover page.

This change to ODCM-QA-007 is an administrative correction and does not decrease the level of effluent control or the accuracy and/or reliability of dose calculations or setpoint determinations as required by 10CFR20.1302, 40CFR190, 10CFR50.36a and 10CFR50 App. I.

Continued ☐

8. DETERMINE COMMITTEE REVIEW REQUIREMENTS
(Refer to Section 6.1.4)
PORC REVIEW REQ'D? ☒ NO ☐ YES

9. PORC MTG# N/A

BLOCKS 11 THRU 16 ARE ON PAGE 2 OF FORM

17. Francis J. Hickey / 1141 / 3/24/03
PREPARER (Print or Type) / ETN / DATE

18. COMMUNICATION OF CHANGE REQUIRED?
☒ NO ☐ YES (TYPE) _____

19. Raymond E. Doetler 3/24/03
RESPONSIBLE SUPERVISOR / DATE

SIGNATURE ATTESTS THAT RESPONSIBLE SUPERVISOR HAS CONDUCTED QADR AND TECHNICAL REVIEW UNLESS OTHERWISE DOCUMENTED IN BLOCK 16 OR ATTACHED REVIEW FORMS. CROSS DISCIPLINE REVIEW (IF REQUIRED) HAS BEEN COMPLETED BY SIGNATURE IN BLOCK 16 OR ATTACHED REVIEW FORMS.

20. N/A
FUM APPROVAL / DATE

21. RESPONSIBLE APPROVER
N/A
INITIALS / DATE

ENTER N/A IF FUM HAS APPROVAL AUTHORITY

RECEIVED
MAR 25 2003
DOCUMENT CONTROL SERVICES - SSES

PROCEDURE CHANGE PROCESS FORM

1. PCAF NO. 2003-1234	2. PAGE 2 OF 3	3. PROC. NO. ODCM-QA-007 REV. 1

11. This question documents the outcome of the 50.59 and 72.48 Review required by NDAP-QA-0726. Either 11a, b, c or d must be checked "YES" and the appropriate form attached or referenced.
    a. This change is an Administrative Correction for which 50.59 and 72.48 are not applicable. ☒ YES ☒ N/A
    b. This change is a change to any surveillance, maintenance or administrative procedure for which 50.59 and 72.48 are not applicable. ☐ YES ☒ N/A
    c. This change is bounded by a 50.59/72.48 Screen/Evaluation, therefore, no new 50.59/72.48 Evaluation is required. ☐ YES ☒ N/A
       Screen/Evaluation No. _____
    d. 50.59 and/or 72.48 are applicable to this change and a 50.59/72.48 Screen/Evaluation is attached. ☐ YES ☒ N/A
12. This change is consistent with the FSAR or an FSAR change is required. ☒ YES
    Change Request No. _____
13. Should this change be reviewed for potential effects on Training Needs or Material? If YES, enter an Action Item @ NIMS/Action/Gen Work Mech/PICN ☐ YES ☒ NO
14. Is a Surveillance Procedure Review Checklist required per NDAP-QA-0722? ☐ YES ☒ NO
15. Is a Special, Infrequent or Complex Test/Evolution Analysis Form required per NDAP-QA-0320? (SICT/E form does not need to be attached.) ☐ YES ☒ NO

16. Reviews may be documented below or by attaching Document Review Forms NDAP-QA-0101-1.

REVIEW	REVIEWED BY WITH NO COMMENTS	DATE
QADR		
TECHNICAL REVIEW		
REACTOR ENGINEERING/NUCLEAR FUELS *		
IST **		
OPERATIONS		
NUCLEAR SYSTEMS ENGINEERING		
NUCLEAR MODIFICATIONS		
MAINTENANCE		
HEALTH PHYSICS		
NUCLEAR TECHNOLOGY		
CHEMISTRY		
OTHER _____		

* Required for changes that affect, or have potential for affecting core reactivity, nuclear fuel, core power level indication or impact the thermal power heat balance. ([58])

** Required for changes to Section XI Inservice Test Acceptance Criteria.

Page 3 of 3

PROCEDURE COVER SHEET

PPL SUSQUEHANNA, LLC	NUCLEAR DEPARTMENT PROCEDURE	
RADIOACTIVE WASTE TREATMENT SYSTEMS		ODCM-QA-007 Revision 1 Page 1 of 16

QUALITY CLASSIFICATION:	APPROVAL CLASSIFICATION:
☒ QA Program ☐ Non-QA Program	☒ Plant ☐ Non-Plant ☐ Instruction

EFFECTIVE DATE: 9-20-2002

PERIODIC REVIEW FREQUENCY: N/A

PERIODIC REVIEW DUE DATE: N/A

RECOMMENDED REVIEWS:

Nuclear Emergency Planning

Procedure Owner: Francis J. Hickey

Responsible Supervisor: Chemistry Supervisor - SSES

Responsible FUM: Chemistry Supervisor - SSES

Responsible Approver: Vice President – Nuclear Operations

PROCEDURE REVISION SUMMARY

TITLE: RADIOACTIVE WASTE TREATMENT SYSTEMS

Most of the revisions described below are editorial in nature. The changes made do not reduce or compromise the level of effluent control or the accuracy and/or reliability of dose calculations or setpoint determinations as required by 10CFR20.1302, 40CFR190, 10CFR50.36a and 10CFR50, Appendix I. Additionally, the changes outlined below: (1) do not alter the conduct of the radiological environmental monitoring program, (2) do not change the radioactive effluent controls and radiological environmental monitoring activities, and (3) do not change the information to be included in the Annual Radiological Environmental Operating and Radioactive Effluent Release Reports.

1. Removed redundant steps and gray shading incorporated for the transition to ITS.

2. Added Attachment B, "SSES Liquid Effluent Release Flowpath" and Attachment C, "SSES Gaseous Effluent Release Flowpath" to illustrate the general system flowpath for each release pathway (per EWR #389182).

3. Deleted the Approval and Date stamp at the bottom of each page due to no longer required per ODCM-QA-002, Rev. 1.

4. Revised Section 2.2.2f to clarify the radiological effluent technical specification guidance provided in NUREG-0133 as well as the response provided in PPL AR No. 222585 (AR No. 222585 added as reference no. 3.20).

5. Deleted Section 2.4.3 due to inclusion into new Attachment C.

6. Various sections revised to reflect SSES organizational changes.

TABLE OF CONTENTS

SECTION		PAGE
1.0	PURPOSE	4
2.0	POLICY/DISCUSSION	4
2.1	Liquid Waste Treatment	4
2.2	Definition of "Appropriate Treatment" for Liquid Wastes	5
2.3	Liquid Effluent Monitoring Instrumentation	6
2.4	Gaseous Waste Treatment	6
2.5	Gaseous Effluent Monitoring Instrumentation	8
2.6	Solid Waste Treatment Including the Process Control Program (PCP)	8
3.0	REFERENCES	9
4.0	RESPONSIBILITIES	10
4.1	Vice President - Nuclear Operations	10
4.2	General Manager - Nuclear Engineering	10
4.3	Chemistry Supervisor - SSES	10
5.0	DEFINITIONS	10
6.0	PROCEDURE	10
6.1	Liquid Waste Treatment	10
6.2	Gaseous Waste Treatment	11
6.3	Evaluating the Dose Impact of Changes to Waste Treatment Systems	11
7.0	RECORDS	12

ATTACHMENTS

Attachment		Page
A	Ventilation Exhaust Treatment Systems Which Require Offsite Vent Evaluations When Bypassed, Degraded, or Otherwise Rendered Inoperable	13
B	SSES Liquid Effluent Release Flowpath	14
C	SSES Gaseous Effluent Release Flowpath	15

1.0 PURPOSE

The purpose of this procedure is to define the operability requirements of the radioactive waste treatment and effluent monitoring systems to keep effluent releases as low as is reasonably achievable. It also includes reporting requirements when changes are made to systems or when operability is not maintained in accordance with the Technical Requirements Manual (TRM).

This procedure constitutes part of the SSES Offsite Dose Calculation Manual (ODCM) which is a licensing basis document.

2.0 POLICY/DISCUSSION

2.1 Liquid Waste Treatment

2.1.1 The SSES Liquid Waste Management System consists of three processing sub-systems, liquid, chemical and laundry. Redundant and backup equipment, alternate process routes, interconnections and spare volumes are designed into the system to provide for operational and unanticipated surge waste volumes due to refueling, abnormal leakage rates, decontamination activities and equipment downtime, maintenance and repair. The system has piping connections to allow the installation of vendor-supplied equipment to provide specific treatment of off-normal wastes or to enhance the normal treatment capabilities as necessary. Appropriate vendor-supplied equipment may also be used in place of installed equipment to allow for repair or replacement of components.

2.1.2 Low conductivity liquid wastes are processed in the Liquid Radwaste Treatment Sub-system (LRW). Liquid is collected in three pairs of LRW Collection tanks. Each pair of tanks has an approximate capacity of 28,000 gallons. Surge capacity is maintained with two pairs of LRW Surge Tanks also with a 28,000-gallon/pair capacity.

Liquids from these tanks are normally processed through two vertical centrifugal discharge precoat filters with 300 ft^2 filter area at a 100 gpm normal flow rate. Liquid from the filters is then sent to a mixed bed demineralizer with a volume of 140 ft^3 and normal flow rate of 100 gpm. The demineralizer effluent is collected in three pairs of LRW Sample Tanks. Each pair of tanks has an approximate capacity of 28,100 gallons. The water is isolated in these tanks for analysis prior to recycle, reuse in the plant, or discharge to the Susquehanna River. Off-specification liquids can be recycled back to the Liquid Waste Management System for additional processing.

2.1.3 High conductivity wastes are collected in the Chemical Drain Tank and in specific sumps located in the Turbine and Radwaste Buildings. Liquid from these sources is collected in a Chemical Waste Tank of

approximately 12,000 gallons capacity. This liquid can then be sent to any one of two pairs of Chemical Waste Neutralizing Tanks. Each pair has a capacity of 31,000 gallons. The liquid is then sent to a vendor-supplied Chemical Waste Processing Sub-system for radionuclide removal. The effluent from the Chemical Waste Processing Sub-system is routed to the Evaporator Distillate Sample Tank where it can be isolated for analysis prior to discharge. The capability exists to recycle the liquid for additional processing if necessary.

2.1.4 The Laundry Waste Sub-system collects water from washdown, laundry and decontamination facilities in one of two Laundry Drain Tanks. Each tank has a capacity of approximately 820 gallons and has an independent mechanical filter system. One tank is normally valved to receive waste while the other is valved for processing. Effluent from these tanks is routed to the Laundry Drain Sample Tank where it can be isolated for analysis prior to discharge. Off-specification liquid can be returned to the Chemical Waste Processing Sub-system.

2.1.5 A flow diagram of the Liquid Waste Management System is shown in Attachment B.

2.2 Definition of "Appropriate Treatment" for Liquid Wastes

2.2.1 TR 3.11.1.3 requires that the appropriate portions of the liquid waste treatment system be operable and be used to reduce radioactivity in liquid wastes prior to their release when projected doses from each reactor unit to unrestricted areas would exceed 0.06 mrem to the total body or 0.2 mrem to any organ in a 31-day period.

2.2.2 Normal treatment, which is considered appropriate for each subsystem, is as follows:

a. Filtration is considered appropriate treatment for the Liquid Radwaste Laundry Processing Subsystem, which consists of high conductivity liquid wastes, such as those from equipment washdown and personnel decontamination facilities, or laundry.

b. The Mobile Liquid Processing System (a vendor-supplied system which is directed to the Distillate Sample Tank) comprises the Liquid Radwaste Chemical Processing Subsystem. Appropriate treatment options provided by this system consist of filtration and demineralization.

c. Demineralization and filtration are considered appropriate treatment for low conductivity/low organic contaminant liquid wastes entering the Liquid Radwaste Processing Subsystem (LRW collection tanks),

d. Release with filtration alone is considered appropriate treatment for low conductivity/low organic contaminant liquid waste for batches which yield projected doses prior to treatment of less than or equal to 6.45E-04 mrem to the total body and 2.15E-03 mrem to any organ.

e. For batches of liquid radwaste which have no identified gamma activity above the Technical Requirements Manual Liquid Effluent LLD level (TR 3.11.1.1 Table 3.11.1.1-1), release without treatment is considered appropriate.

f. Projected dose threshold values used are derived by dividing the "per-unit" maximum projected doses without treatment (0.06 and 0.2 mrem) by 31 days and by 6, the maximum possible number of batches released per day. The "per-unit" threshold values are doubled (due to SSES is a two-unit site) to yield per-batch dose action levels. The two levels of "appropriate" treatment are in place so as not to require application of demineralization for treating low activity, high conductivity water (e.g., from Circulating or Service Water leakage). This would increase the overall efficiency of the solid radwaste program while ensuring calculated doses remain at a suitable fraction of 10CFR50 Appendix I design objectives and TR 3.11.1.2 limit (PLI-70360 and PLI-70612).

g. If liquid waste was discharged without treatment at levels exceeding TR 3.11.1.3, a special report shall be prepared and submitted to the NRC within 30 days which addresses the actions of TR 3.11.1.3.

2.3 Liquid Effluent Monitoring Instrumentation

2.3.1 Liquid radwaste monitoring instrumentation shall be maintained as specified in TR 3.11.1.4 and liquid process monitoring instrumentation shall be maintained as specified in TR 3.11.1.5. When monitoring instrumentation is not operable in accordance with the TRM, the required action of the TRM shall be implemented as stated. If the inoperable condition was not corrected within the specified time frame, a report of the uncorrected condition shall be made in the Annual Effluent and Waste Disposal Report.

2.4 Gaseous Waste Treatment

2.4.1 The SSES Off Gas Treatment System operates with four steam jet air ejectors maintaining condenser vacuum. Noncondensible gases are passed through one of three recombiners (one for each reactor unit plus a common recombiner), reducing the amount of gases to be filtered and released. Gases pass through a two to nine minute holdup pipe before entering the Off Gas Treatment System, which consists of one 100

percent capacity system per reactor unit. Each system consists of precoolers, chillers, reheaters, guard beds, and five charcoal absorbers and an outlet HEPA filter. Filtered air then exits to the Turbine Building vent.

2.4.2 The gaseous radwaste treatment system must be in operation whenever the main condenser air ejector system is in operation. This is the appropriate level of gaseous waste treatment.

2.4.3 Filtered exhaust systems serve selected areas of Zone I, II, and III of the SSES Reactor Building. The Zone I and Zone II equipment compartment and Zone III filtered exhaust systems each consist of two 100% capacity redundant fans and two 55% capacity filter trains. Each filter train has, in the direction of air flow, roughing filters, upstream HEPA filters, a charcoal filter bed, and downstream HEPA filters. Exhaust fan discharge is then routed to the atmosphere via the Reactor Building vents, where effluents are continuously sampled and monitored.

2.4.4 The containment drywell is vented and purged via the Standby Gas Treatment System (SGTS) to ensure releases from the drywell are maintained as low as is reasonably achievable. This provides the appropriate level of treatment.

2.4.5 The Turbine Building Filtered Exhaust System draws air from those areas of the building that are most likely to become contaminated. Two 100% capacity fans serve each system, which contains two 50% capacity filter housings made up of a particulate prefilter, an upstream HEPA filter and a charcoal filter. Discharged air is released via the Turbine Building vents, which are continuously sampled and monitored.

2.4.6 The Radwaste Building Filtered Exhaust System draws potentially contaminated air from selected areas of the Radwaste Building. The system contains two 100% capacity fans and two 50% capacity filter housings, each containing a particulate filter bank and a HEPA filter. Filtered air is discharged via the Unit 1 Turbine Building vent.

2.4.7 Ventilation exhaust systems must be drawing air through the HEPA and charcoal filters (where available) as the appropriate level of waste treatment.

2.4.8 In order to minimize the quantities of radioactivity in airborne effluents from the station, the ventilation exhaust treatment (filtered exhaust) systems are normally kept in service at SSES. A flow diagram of the Gaseous Waste Management System is shown in Attachment C.

2.4.9 As the need arises, these systems are periodically rendered inoperable for maintenance or testing activities. If any of the ventilation exhaust

treatment systems in Attachment A are bypassed, degraded, or otherwise rendered inoperable, vent evaluations shall be performed in accordance with plant procedures. If the most recent 31-day dose projection indicates that dose may exceed 0.3 mrem to any organ when averaged over the projected 31-day period, treatment systems rendered inoperable will be restored to operable status as quickly as is practicable.

2.4.10 When the Standby Gas Treatment System (SGTS) is not being used, a small amount of flow from the SGTS vent remains. This residual flow originates in the battery rooms and SGTS Equipment Room in the control structure. Because there are no identifiable sources of radioactivity in these rooms, auxiliary particulate and iodine sample and noble gas grab sample at 4-hour intervals are not required from the SGTS vent when the SGTS continuous vent monitor is out of service, provided that

a. the Standby Gas Treatment System is not being used,

b. there are proper administrative controls in place to ensure that the required sampling will begin within 4 hours if the treatment system is operated.

2.4.11 If inoperable gaseous radwaste treatment systems are not returned to operation as required by TR 3.11.2.4.A, then a special report shall be prepared and submitted to the NRC within 30 days.

2.4.12 If gaseous effluents are discharged in excess of the limits of TR 3.11.2.5.A without treatment, then a special report shall be prepared and submitted to the NRC within 30 days.

2.5 Gaseous Effluent Monitoring Instrumentation

Gaseous effluents shall be monitored as specified in TR 3.11.2.6. When monitoring instrumentation is not operable in accordance with the TRM, the required action of the TRM shall be implemented as stated. If the inoperable condition is not corrected in the specified time frame, a report of the uncorrected condition shall be made in the Annual Effluent and Waste Disposal Report.

2.6 Solid Waste Treatment Including the Process Control Program (PCP)

2.6.1 The SSES Solid Radwaste System collects all wet wastes produced from the operation of other plant systems. A vendor-supplied system processes and packages the wastes into a waste form that meets all applicable federal, state, and local requirements for transportation, storage, and disposal. The Solid Radwaste Process Control Program (NDAP-QA-0646) contains the administrative controls for waste sampling, waste analysis, formulation for solidification or dewatering instructions, verification of solidification or dewatering, and reporting of process

failures to ensure liquid waste is properly processed for disposal. In addition, the Process Control Program provides requirements for classifying waste in accordance with 10CFR61.

2.6.2 Changes in radioactive solid waste processing and operational changes shall be controlled, reviewed, and approved in accordance with NDAP-QA-0646.

2.6.3 Any changes to the Solid Radioactive Waste Process Control Program shall be provided in the Annual Radioactive Effluent and Waste Disposal Report.

3.0 REFERENCES

3.1 TR 3.6.1, Containment Venting or Purging

3.2 TR 3.11.1.3, [Radioactive Effluents] Liquid Waste Treatment System

3.3 TR 3.11.1.2, [Radioactive Effluents] Dose

3.4 TR 3.11.4.1, Table 3.11.4.1-3, Detection Capabilities for Environmental Sample Analysis Lower Limit of Detection (LLD)

3.5 TR 3.11.1.4, Liquid Radwaste Effluent Monitoring Instrumentation

3.6 TR 3.11.1.5, Radioactive Liquid Process Monitoring Instrumentation

3.7 TR 3.11.2.4, Gaseous Radwaste Treatment Systems

3.8 TR 3.11.2.5, Ventilation Exhaust Treatment Systems

3.9 TR 3.11.2.6, Radioactive Gaseous Effluent Monitoring Instrumentation

3.10 10CFR50.59, Changes, Tests and Experiments

3.11 10CFR20, Standards for Protection Against Radiation

3.12 FSAR Figure 11.2-8, Liquid Radwaste System Flow Diagram

3.13 FSAR Figure 11.3-1, Offgas System Process Flow Diagram

3.14 NDAP-QA-0646, Solid Radioactive Waste Process Control Program

3.15 NDAP-00-1203, Modification Identification and Scoping Process

3.16 ODCM-QA-005, Waterborne Effluent Dose Calculations

3.17 ODCM-QA-009, Dose Assessment Policy Statements

3.18 PLI-70360, Memo from R. K. Barclay to R. A. Breslin, Calculation of Liquid Isotope Sampling Limits: Use of Atmospheric Demineralizer System, February 4, 1992

3.19 PLI-70612, Memo from R. K. Barclay to R. A. Breslin, Atmospheric Demineralizer Effluent Results, March 4, 1992

3.20 Action Request No. 222585.

4.0 RESPONSIBILITIES

4.1 Vice President – Nuclear Operations

4.1.1 Ensures that radioactive waste treatment systems are operated in compliance with the TROs stated in the Technical Requirements Manual and in accordance with this procedure.

4.2 General Manager – Nuclear Engineering

4.2.1 Provides modification engineering and support in accordance with NDAP-00-1203 for equipment and systems involved with the treatment or monitoring of radioactive effluents.

4.3 Chemistry Supervisor - SSES

4.3.1 Ensures adequacy and correctness of operability requirements of the radioactive waste treatment systems presented in this procedure.

4.3.2 Ensures adequacy and correctness of pre-release liquid effluent dose assessments.

5.0 DEFINITIONS

5.1 LRW- Liquid Radwaste

5.2 RCA - Radiologically Controlled Area

6.0 PROCEDURE

6.1 Liquid Waste Treatment

6.1.1 Chemistry shall perform a dose assessment using the methodology of ODCM-QA-005 prior to release in cases when a batch of liquid waste must be released with treatment less than that specified in Section 2.2, to ensure that the limits of TR 3.11.1.2 are not exceeded.

6.2 Gaseous Waste Treatment

6.2.1 Dose projections shall be performed at least once per 31 days based on the most recently available effluent data. If it is known prior to performing the dose projection that a treatment system will be out of service, and if data exists which indicates how the lack of treatment will impact effluents, these factors will be considered when performing the dose projection.

6.3 Evaluating the Dose Impact of Changes to Waste Treatment Systems

6.3.1 The Annual Effluent and Waste Disposal Report shall include a discussion of any major changes to radwaste systems (liquid, gaseous and solid). Such discussion shall include the following:

a. a summary of the evaluation that led to the determination that the change could be made in accordance with 10CFR50.59,

b. sufficiently detailed information to fully support the change without supplemental information,

c. detailed descriptions of the equipment, components and processes involved and interfaces with other plant systems,

d. an evaluation which shows how the predicted releases of radioactive materials in liquid and gaseous effluents and/or quantity of solid waste differ from those previously predicted in the license application or subsequent amendments,

e. an evaluation of the change which shows the expected maximum exposures to an individual in the unrestricted area and to the general population that differ from those previously estimated in the license application or subsequent amendments,

f. a comparison of predicted releases of radioactive materials in liquid and gaseous effluents and in solid waste to the actual releases for the period prior to when the changes are to be made,

g. an estimate of exposure to plant operating personnel as a result of the change, and documentation that the change was reviewed and approved by PORC.

6.3.2 If a modification to the liquid waste system results in positioning a radioactive liquid storage tank outside which is not surrounded by a liner, dike, or a wall capable of holding the contents of the tank and the tank does not have an overflow or surrounding area drains connected to the Liquid Radwaste Treatment System, then the tank contents shall be

limited to less than 10 Curies (not including tritium and dissolved gas). Chemistry will sample the tank per the TRM to ensure the contents are limited to 10 Curies. This is to ensure that a tank failure will not result in radioactivity in the nearest drinking water source in concentrations which exceed 10CFR20, Appendix B, Table 2, Col. 2.

7.0 RECORDS

None.

odcm-qa-007(26)

PCAF # 2003-1304
PAGE 3 OF 3

VENTILATION EXHAUST TREATMENT SYSTEMS WHICH REQUIRE OFFSITE VENT EVALUATIONS WHEN BYPASSED, DEGRADED, OR OTHERWISE RENDERED INOPERABLE

FILTER SYSTEM LOCATION	UPSTREAM HEPA DESIGNATION	CHARCOAL	DOWNSTREAM HEPA DESIGNATION
Unit 1 Turbine Building	1F157A/B	1F158A/B	N/A
Unit 2 Turbine Building	2F157A/B	2F158A/B	N/A
Unit 1 Zone 1 Reactor Building	1F255A/B	1F257A/B	1F258A/B
Unit 1 Zone 3 Reactor Building	1F216A/B	1F217A/B	1F218A/B
Unit 2 Zone 2 Reactor Building	2F255A/B	2F257A/B	2F258A/B
Unit 2 Zone 3 Reactor Building	2F216A/B	2F217A/B	2F218A/B
Radwaste Building Exhaust	0F355A/B	N/A	N/A
Radwaste Tank Vent	0F358	0F359	N/A
~~Radwaste Degasifier~~	~~0F372~~	~~0F373~~	~~0F374~~
Control Structure Sample Room	0F134	0F135	N/A
Control Structure Rad Chem Lab	0F137	0F138	N/A
Control Structure Rad Chem Lab	0F140	0F141	N/A
Control Structure Decon Area	0F143	0F144	N/A
S&A Building	0F716	N/A	N/A

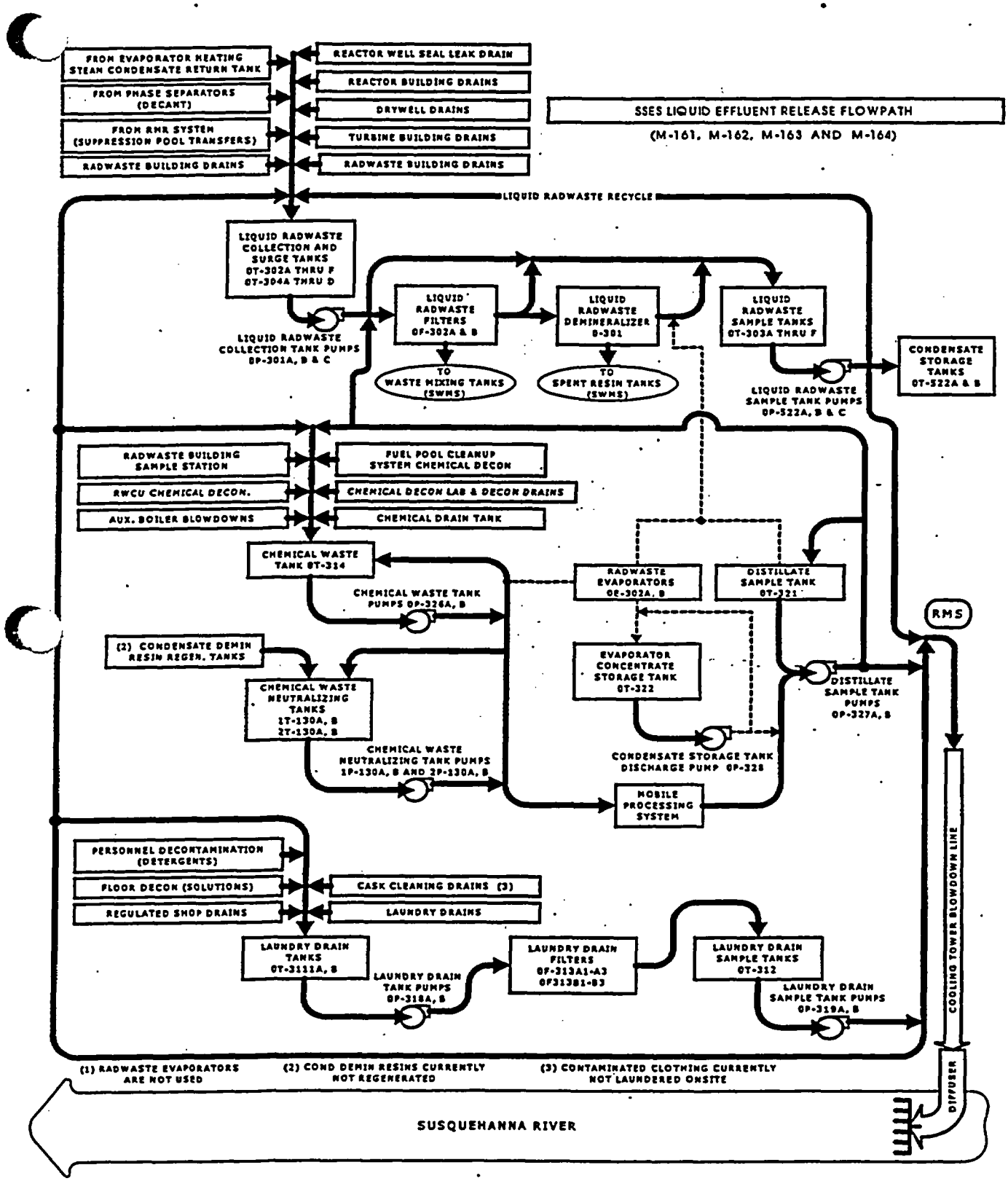
SSES LIQUID EFFLUENT RELEASE FLOWPATH
(M-161, M-162, M-163 AND M-164)
FROM EVAPORATOR HEATING STEAM CONDENSATE RETURN TANK
FROM PHASE SEPARATORS (DECANT)
FROM RHR SYSTEM (SUPPRESSION POOL TRANSFERS)
RADWASTE BUILDING DRAINS
REACTOR WELL SEAL LEAK DRAIN
REACTOR BUILDING DRAINS
DRYWELL DRAINS
TURBINE BUILDING DRAINS
RADWASTE BUILDING DRAINS
LIQUID RADWASTE RECYCLE
LIQUID RADWASTE COLLECTION AND SURGE TANKS 0T-302A THRU F 0T-304A THRU D
LIQUID RADWASTE COLLECTION TANK PUMPS 0P-301A, B & C
LIQUID RADWASTE FILTERS 0F-302A & B
LIQUID RADWASTE DEMINERALIZER 0-301
LIQUID RADWASTE SAMPLE TANKS 0T-303A THRU F
TO WASTE MIXING TANKS (SWMS)
TO SPENT RESIN TANKS (SWMS)
LIQUID RADWASTE SAMPLE TANK PUMPS 0P-322A, B & C
CONDENSATE STORAGE TANKS 0T-322A & B
RADWASTE BUILDING SAMPLE STATION
RWCU CHEMICAL DECON.
AUX. BOILER BLOWDOWNS
FUEL POOL CLEANUP SYSTEM CHEMICAL DECON
CHEMICAL DECON LAB & DECON DRAINS
CHEMICAL DRAIN TANK
CHEMICAL WASTE TANK 0T-314
CHEMICAL WASTE TANK PUMPS 0P-326A, B
RADWASTE EVAPORATORS 0E-302A, B
DISTILLATE SAMPLE TANK 0T-321
RMS
(2) CONDENSATE DEMIN RESIN REGEN. TANKS
CHEMICAL WASTE NEUTRALIZING TANKS 1T-130A, B 2T-130A, B
EVAPORATOR CONCENTRATE STORAGE TANK 0T-322
DISTILLATE SAMPLE TANK PUMPS 0P-327A, B
CHEMICAL WASTE NEUTRALIZING TANK PUMPS 1P-130A, B AND 2P-130A, B
CONDENSATE STORAGE TANK DISCHARGE PUMP 0P-328
MOBILE PROCESSING SYSTEM
PERSONNEL DECONTAMINATION (DETERGENTS)
FLOOR DECON (SOLUTIONS)
REGULATED SHOP DRAINS
CASK CLEANING DRAINS (3)
LAUNDRY DRAINS
LAUNDRY DRAIN TANKS 0T-3111A, B
LAUNDRY DRAIN TANK PUMPS 0P-318A, B
LAUNDRY DRAIN FILTERS 0F-313A1-A3 0F313B1-B3
LAUNDRY DRAIN SAMPLE TANKS 0T-312
LAUNDRY DRAIN SAMPLE TANK PUMPS 0P-319A, B
COOLING TOWER BLOWDOWN LINE
DIFFUSER
(1) RADWASTE EVAPORATORS ARE NOT USED
(2) COND DEMIN RESINS CURRENTLY NOT REGENERATED
(3) CONTAMINATED CLOTHING CURRENTLY NOT LAUNDERED ONSITE
SUSQUEHANNA RIVER

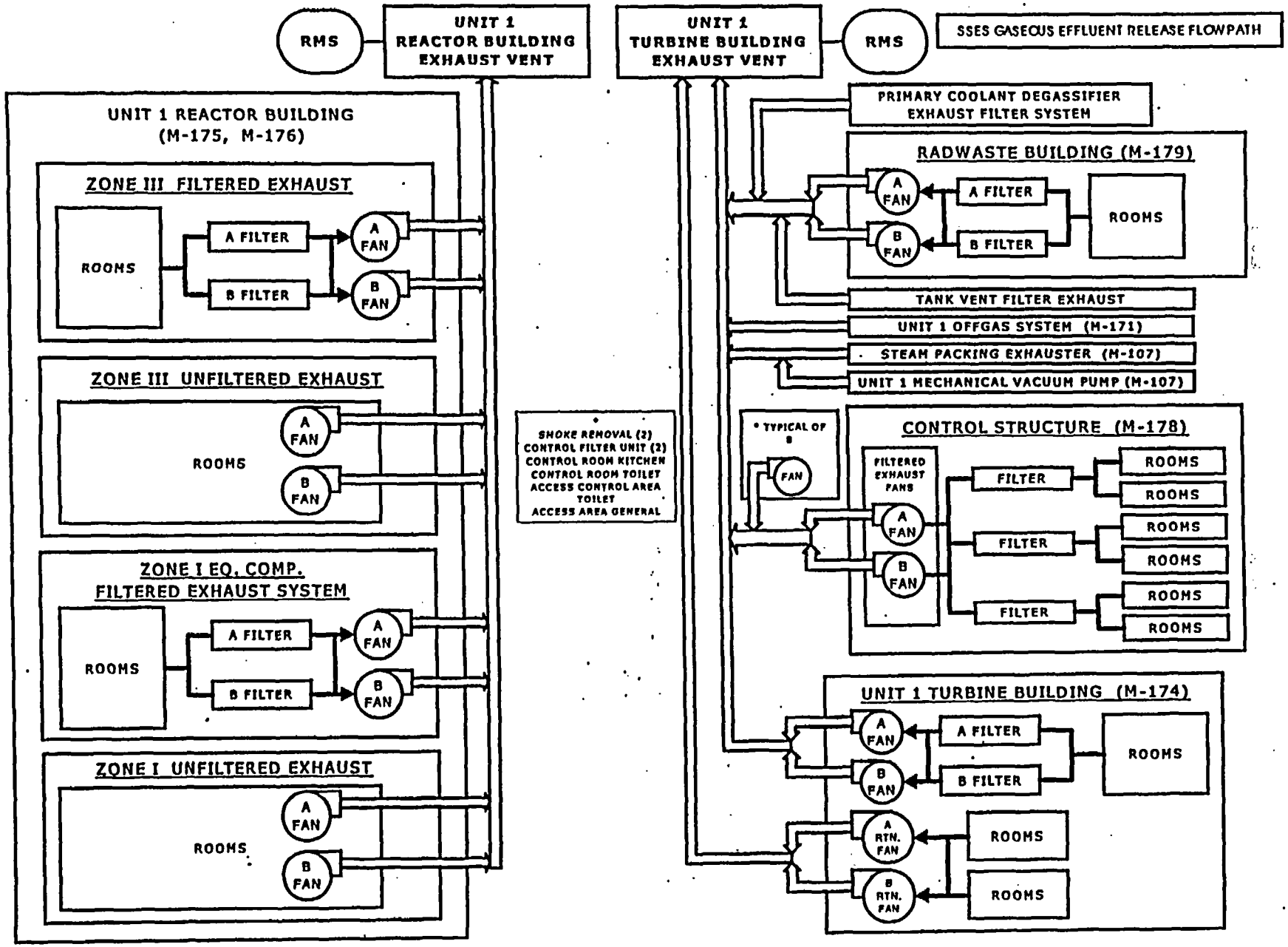
RMS
UNIT 1 REACTOR BUILDING EXHAUST VENT
UNIT 1 TURBINE BUILDING EXHAUST VENT
RMS
SSES GASEOUS EFFLUENT RELEASE FLOWPATH
UNIT 1 REACTOR BUILDING (M-175, M-176)
ZONE III FILTERED EXHAUST
ROOMS
A FILTER
B FILTER
A FAN
B FAN
ZONE III UNFILTERED EXHAUST
ROOMS
A FAN
B FAN
ZONE I EQ. COMP. FILTERED EXHAUST SYSTEM
ROOMS
A FILTER
B FILTER
A FAN
B FAN
ZONE I UNFILTERED EXHAUST
ROOMS
A FAN
B FAN
SMOKE REMOVAL (2)
CONTROL FILTER UNIT (2)
CONTROL ROOM KITCHEN
CONTROL ROOM TOILET
ACCESS CONTROL AREA TOILET
ACCESS AREA GENERAL
PRIMARY COOLANT DEGASSIFIER EXHAUST FILTER SYSTEM
RADWASTE BUILDING (M-179)
A FAN
B FAN
A FILTER
B FILTER
ROOMS
TANK VENT FILTER EXHAUST
UNIT 1 OFFGAS SYSTEM (M-171)
STEAM PACKING EXHAUSTER (M-107)
UNIT 1 MECHANICAL VACUUM PUMP (M-107)
* TYPICAL OF 8
FAN
CONTROL STRUCTURE (M-178)
FILTERED EXHAUST FANS
A FAN
B FAN
FILTER
FILTER
FILTER
ROOMS
ROOMS
ROOMS
ROOMS
ROOMS
ROOMS
UNIT 1 TURBINE BUILDING (M-174)
A FAN
B FAN
A FILTER
B FILTER
ROOMS
A RTN. FAN
B RTN. FAN
ROOMS
ROOMS

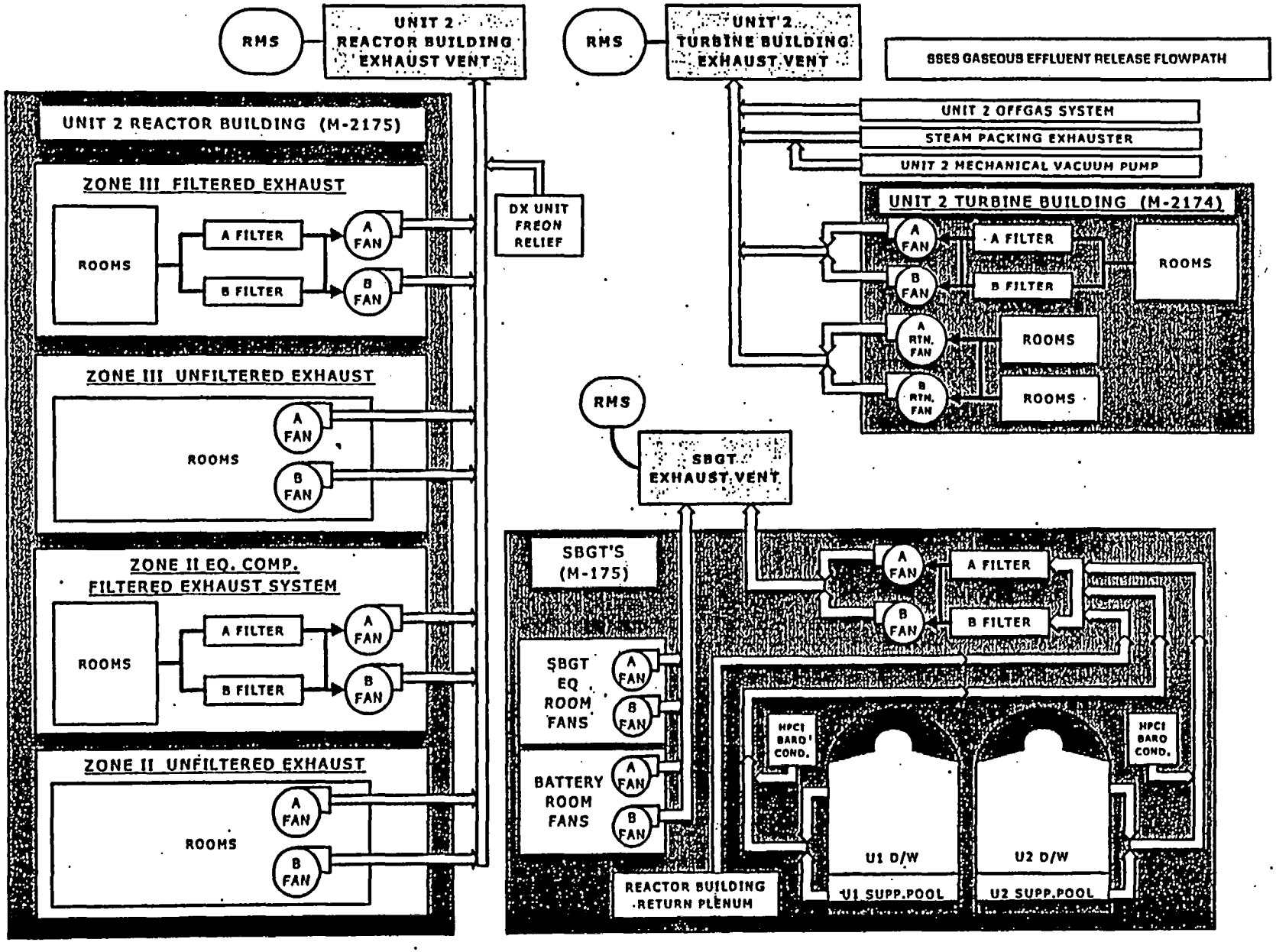
RMS
UNIT 2 REACTOR BUILDING EXHAUST VENT
RMS
UNIT 2 TURBINE BUILDING EXHAUST VENT
SSES GASEOUS EFFLUENT RELEASE FLOWPATH
UNIT 2 OFFGAS SYSTEM
STEAM PACKING EXHAUSTER
UNIT 2 MECHANICAL VACUUM PUMP
UNIT 2 REACTOR BUILDING (M-2175)
ZONE III FILTERED EXHAUST
ROOMS
A FILTER
B FILTER
A FAN
B FAN
DX UNIT FREON RELIEF
UNIT 2 TURBINE BUILDING (M-2174)
A FAN
B FAN
A FILTER
B FILTER
ROOMS
A RTN. FAN
B RTN. FAN
ROOMS
ROOMS
ZONE III UNFILTERED EXHAUST
ROOMS
A FAN
B FAN
RMS
SBGT EXHAUST VENT
ZONE II EQ. COMP. FILTERED EXHAUST SYSTEM
ROOMS
A FILTER
B FILTER
A FAN
B FAN
SBGT'S (M-175)
A FAN
B FAN
A FILTER
B FILTER
SBGT EQ ROOM FANS
A FAN
B FAN
HPCI BARO COND.
HPCI BARO COND.
ZONE II UNFILTERED EXHAUST
ROOMS
A FAN
B FAN
BATTERY ROOM FANS
A FAN
B FAN
U1 D/W
U2 D/W
U1 SUPP.POOL
U2 SUPP.POOL
REACTOR BUILDING RETURN PLENUM

PROCEDURE COVER SHEET

PPL SUSQUEHANNA, LLC PROCEDURE	
RADIOLOGICAL ENVIRONMENTAL MONITORING PROGRAM ADHERENCE LEVEL: INFORMATION USE	ODCM-QA-008 Revision 5 Page 1 of 79
QUALITY CLASSIFICATION: (X) QA Program ( ) Non-QA Program	APPROVAL CLASSIFICATION: (X) Plant ( ) Non-Plant ( ) Instruction
EFFECTIVE DATE: 1-28-2004 PERIODIC REVIEW FREQUENCY: N/A PERIODIC REVIEW DUE DATE: N/A	
RECOMMENDED REVIEWS: Nuclear Emergency Planning	
Procedure Owner: Francis J. Hickey Responsible Supervisor: Chemistry Support Supervisor-SSES Responsible FUM: Chemistry Supervisor-SSES Responsible Approver: Vice President-Nuclear Operations	

CERTIFIED

PROCEDURE REVISION SUMMARY

TITLE: RADIOLOGICAL ENVIRONMENTAL MONITORING PROGRAM

1) Revised Attachment C to incorporate complete list of TLD Locations.

2) Added PLI 92573 to Reference Section to support item 1 above.

3) Revised Attachments A and B to correspond with item 1 above.

4) Revised section 2.3.1 to clarify the requirements of the Interlaboratory Comparison program.

5) Minor typographical corrections.

The changes to ODCM-QA-008 above have been determined to not decrease the level of effluent control or the accuracy and/or reliability of dose calculations or setpoint determinations as required by 10CFR20.1302, 40CFR190, 10CFR50.36a, and 10CFR50, Appendix I.

TABLE OF CONTENTS

SECTION		PAGE
1.	PURPOSE	5
2.	POLICY/DISCUSSION	5
2.1	Monitoring Program	5
2.2	Census Program	7
2.3	Interlaboratory Comparison Program	8
2.4	Dose Computations	8
3.	REFERENCES	8
4.	RESPONSIBILITIES	9
4.1	Chemistry Support Supervisor-SSES	9
4.2	Chemistry Support Personnel	9
5.	DEFINITIONS	9
6.	PROCEDURE	10
6.1	Dose Computations	10
7.	RECORDS	11

ATTACHMENTS

ATTACHMENT		PAGE
A	Environmental Monitoring Locations within One Mile of SSES	12
B	Environmental Monitoring Locations Greater Than One Mile from SSES	13
C	Operational Radiological Environmental Monitoring Program	14
D	REMP Dose Factors for Adult Age Group	17
E	REMP Dose Factors for Teen Age Group	33

ATTACHMENTS

ATTACHMENT		PAGE
F	REMP Dose Factors for Child Age Group	49
G	REMP Dose Factors for Infant Age Group	65
H	REMP Dose Factors for Shoreline/Sediment Total Body and Skin Dose	73
I	Consolidated Dose Calculations	76

1. PURPOSE

The purpose of this procedure is to provide the methodology and parameters used to determine doses to the public resulting from inhalation, ingestion, and direct shine from radiologically contaminated environmental sampling media based on measured activity concentrations in those media. This procedure also describes the Radiological Environmental Monitoring Program (REMP), which includes the annual land use census survey and interlaboratory comparison program.

This procedure constitutes part of the SSES Offsite Dose Calculation Manual (ODCM), which is a licensing basis document.

2. POLICY/DISCUSSION

2.1 Monitoring Program

2.1.1 The results of the Radiological Environmental Monitoring Program are intended to supplement the results of the radiological effluent monitoring by verifying that the measurable concentrations of radioactive materials and levels of radiation are not higher than expected on the basis of the effluent measurements and modeling of the environmental exposure pathways. Thus, the specified environmental monitoring program provides measurements of radiation and of radioactive materials in those exposure pathways and for those radionuclides which lead to the highest potential radiation exposures of individuals resulting from station operation.

2.1.2 Environmental samples shall be collected and analyzed (as a minimum) according to Attachment C at locations shown in Attachments A and B in order to meet the requirements of TR Table 3.11.4.1-1. Comparisons to the Reporting Levels of TR Table 3.11.4.1-2 are conducted in accordance with procedure SC-099-003. Analytical techniques used shall ensure that the detection capabilities in TR Table 3.11.4.1-3 are achieved.

2.1.3 Sampling specified in Attachment C shall be performed with a maximum allowable extension not to exceed 25 percent of the specified interval. More restrictive tolerances may be imposed by implementing procedures.

2.1.4 Program changes may be proposed based on operational experience. Deviations are permitted from the required sampling schedule if specimens are unobtainable due to hazardous conditions, seasonal unavailability, malfunction of automatic sampling equipment, and other legitimate reasons. If specimens are unobtainable due to sampling equipment malfunction, an effort shall be made to complete corrective action prior to the end of the next sampling period. All program changes and deviations from the sampling schedule shall be documented in the next Annual Radiological Environmental Operating Report.

2.1.5 An Annual Radiological Environmental Operating Report shall be prepared and submitted to the NRC prior to May 15 of each year in accordance with Technical Specification 5.6.2. The report shall include summaries, interpretations and analyses of trends of the results of the Radiological Environmental Monitoring Program (including any monitoring not conducted in accordance with TR Table 3.11.4.1-1) for the reporting period. A comparison, as appropriate, of sample analysis results with pre-operational studies, operational controls and results reported in previous reports shall be included. An assessment of environmental impacts of plant operation shall be made. The material provided shall be consistent with the objectives contained in the ODCM and 10CFR50, Appendix I, Sections IV.B.2, IV.B.3 and IV.C.

The Annual Radiological Environmental Operating Report shall include the results of analyses of all radiological environmental samples and of all environmental radiation measurements taken during the period at the locations specified in the ODCM as well as the summary and tabulation of results presented in the format of the table in the Radiological Assessment Branch Technical Position, Rev. 1, November 1979. The results of the Land Use Census and the Interlaboratory Comparison Program are included as well as corrective actions for analyses with results which are outside the control limits specified in the Interlaboratory Comparison Program. Detected radionuclides which are not the result of plant effluents must be included in the report.

At least two maps, including one near the Site Boundary, showing monitoring/sampling locations that are keyed to table(s) providing distances and directions from the plant centerline shall also be included.

In the event that some individual results are not available for inclusion with the report, the report shall note and explain the reasons for the missing results. The missing data shall be submitted in a supplementary report as soon as possible.

2.1.6 Special Reports shall be prepared and submitted to the NRC in accordance with the TROs of the specific sections of the Technical Requirements Manual.

2.2 Census Program

2.2.1 Broad leaf vegetation sampling of at least three different kinds of vegetation may be performed at the site boundary in each of two direction sectors with the highest predicted D/Q's in lieu of the garden census. Specifications for broad leaf vegetation sampling in TR Table 3.11.4.1-1, Item 4C shall be followed, including analysis of control samples.

2.2.2 If a land use census identifies a location(s) with a higher average annual deposition rate (D/Q) than a current indicator location, the following shall apply:

a. If the D/Q is at least 20 percent greater than a previously high D/Q, the new location shall be added to the program within 30 days of documented identification of sampling feasibility. The indicator location having the lowest D/Q may be dropped from the program after October 31 of the year in which they land use census was conducted.

b. If the D/Q is <u>not</u> 20 percent greater than the previously highest D/Q, direction, distance, and D/Q will be considered in deciding whether to replace one of the existing sample locations. If applicable, replacement shall be within 30 days of documented decision making.

2.2.3 Any evaluations of possible location replacement should include the past history of the location, availability of sample, milk production history, and other applicable environmental conditions. New locations for dose calculations or environmental monitoring shall be reported in the Radioactive Effluent Release Report.

2.2.4 A land use census will be conducted at least once per calendar year by a door-to-door or aerial survey, by consulting local agricultural authorities, or by any combination of these methods.

2.3 Interlaboratory Comparison Program

2.3.1 The laboratories providing radioanalytical services for the station's Radiological Environmental Monitoring Program (REMP) shall participate in an Interlaboratory Comparison Program (ICP) which is traceable to NIST and should cover media sampled by the REMP.

2.3.2 Analysis results which are obtained as part of an ICP that are not within acceptance limits established by the ICP shall be investigated by the laboratory responsible for the analysis. Corrective action appropriate for the findings of the investigation shall be taken. Investigation findings and corrective actions taken shall be described in the Annual Radiological Environmental Operating Report.

2.4 Dose Computations

2.4.1 When doses to members of the public are to be determined from REMP sample analysis results reported above LLD, doses should be added across sampling media for the same exposure pathways (airborne or waterborne), if available, to maximize the result for a particular age group and organ.

3. REFERENCES

3.1 Regulatory Guide 1.109, Rev. 1, October, 1977, Calculation of Annual Doses to Man from Routine Releases of Reactor Effluents for the Purposes of Evaluating Compliance with 10CFR50, Appendix I.

3.2 TR Table 3.11.4.1-1, Radiological Environmental Monitoring Program

3.3 TR Table 3.11.4.1-2, Reporting Levels for Radioactivity Concentrations in Environmental Samples

3.4 TR Table 3.11.4.1-3, Detection Capabilities for Environmental Sample Analysis

3.5 TS 5.6.2, Annual Radiological Environmental Operating Report

3.6 10CFR50, Appendix I, Numerical Guides for Design Objectives and Limiting Conditions for Operation to Meet the Criterion "As Low as is Reasonably Achievable" for Radioactive Material in Light-Water-Cooled Nuclear Power Reactor Effluents

3.7 40CFR141, National Primary Drinking Water Regulations

3.8 Regulatory Guide 4.8, December 1975- Environmental Technical Specifications for Nuclear Power Plants

3.9 Branch Technical Position to NRC Reg. Guide 4.8, Rev. 1, November 1979

3.10 ORP/SID 72-2 Environmental Radioactivity Surveillance Guide

3.11 NEPM-QA-1014, Radiological Environmental Monitoring Program

3.12 ST-099-003, Performance of REMP Quarterly Surveillance

3.13 PPL Calculation EC-ENVR-1027, SSES REMP Dose Factor Calculations: C. R. 96-1310

3.14 PLI-92573, 2003 Environmental TLD Reduction Evaluation

4. RESPONSIBILITIES

4.1 Chemistry Support Supervisor-SSES

4.1.1 Is responsible for appointing and supervising Chemistry Support Personnel.

4.2 Chemistry Support Personnel

4.2.1 Have the primary responsibility for developing the REMP and ensuring proper conduct of the REMP.

5. DEFINITIONS

5.1 LLD - Lower Limit of Detection, the smallest concentration of radioactive material in a sample that will yield a net count (above system background) that will be detected with 95 percent probability with only a 5 percent probability of falsely concluding that a blank observation represents a "real" signal.

5.2 REMP - Radiological Environmental Monitoring Program.

5.3 MEMBER(S) OF THE PUBLIC - Shall include all persons who are not occupationally associated with the plant. This category does not include employees of the utility, its contractors, or vendors. Also excluded from this category are persons who enter the site to service equipment or to make deliveries. This category does include persons who use portions of the site for recreational, occupational, or other purposes not associated with the plant.

6. PROCEDURE

6.1 Dose Computations

6.1.1 Chemistry Support Personnel shall determine annual doses to members of the public from ingestion of radioactive material for various pathways, age groups and organs according to the methodology developed in EC-ENVR-1027:

$$D_{REMP/ING} = DF_{CALC/ING} * RES_{REMP} * F_{SAMP} \quad \text{(Eq. 1)}$$

where:

$D_{REMP/ING}$ = Annual dose from ingestion, as determined from REMP sample result (mrem/year). Refer to Attachment I for the regulatory basis of the calculation of $D_{REMP/ING}$.

$DF_{CALC/ING}$ = Dose rate factor for ingestion pathway; mrem-liter/pCi-yr for liquid samples; mrem-kg/pCi-yr for solid samples (Attachments D through G).

RES_{REMP} = REMP sample result: pCi/liter for water or milk samples; pCi/kg for vegetable, fruit, meat or fish samples.

F_{SAMP} = Correction factor for the fraction of year represented by the sampling period (for cases where only periodic or seasonal sampling is conducted).

6.1.2 Chemistry Support Personnel shall determine annual doses to members of the public from inhalation of radioactive material for various pathways, age groups and organs according to the methodology developed in EC-ENVR-1027:

$$D_{REMP/INH} = DF_{CALC/INH} * RES_{REMP} * F_{SAMP} \quad \text{(Eq. 2)}$$

where:

$D_{REMP/INH}$ = Annual dose to organs or total body from inhalation, as determined from REMP sample result (mrem/yr). Refer to Attachment I for the regulatory basis of the calculation of $D_{REMP/INH}$.

$DF_{CALC/INH}$ = Dose rate factor for inhalation pathway (mrem-m^3/pCi-yr) (Attachments D through G).

RES_{REMP} = REMP sample result: pCi/m^3 for air samples corrected for absorption efficiency of filter media.

6.1.3 Chemistry Support Personnel shall determine annual doses to members of the public from exposure to contaminated sediment for total body and skin dose, for various age groups according to the methodology developed in EC-ENVR-1027:

$$D_{REMP/TB} = DF_{CALC/TB} * RES_{REMP} * F_{SAMP} \quad \text{(Eq. 3)}$$

$$D_{REMP/SKIN} = DF_{CALC/SKIN} * RES_{REMP} * F_{SAMP} \quad \text{(Eq. 4)}$$

where:

$D_{REMP/TB}$ = Annual total body dose, as determined from REMP sample result (mrem/yr). Refer to Attachment I for the regulatory basis of the calculation of $D_{REMP/TB}$.

$D_{REMP/SKIN}$ = Annual skin dose, as determined from REMP sample result (mrem/yr). Refer to Attachment I for the regulatory basis of the calculation of $D_{REMP/SKIN}$.

RES_{REMP} = REMP sample result: pCi/kg sediment.

$DF_{CALC/TB}$ = Total body dose rate factor from sediment (mrem-kg/pCi-yr) (Attachment H).

$DF_{CALC/SKIN}$ = Skin dose rate factor from sediment (mrem-kg/pCi-yr) (Attachment H).

F_{SAMP} = Correction factor for the fraction of year represented by the sampling period (for cases where only periodic or seasonal sampling is conducted).

7. RECORDS

None

ENVIRONMENTAL MONITORING LOCATIONS WITHIN ONE MILE OF SSES

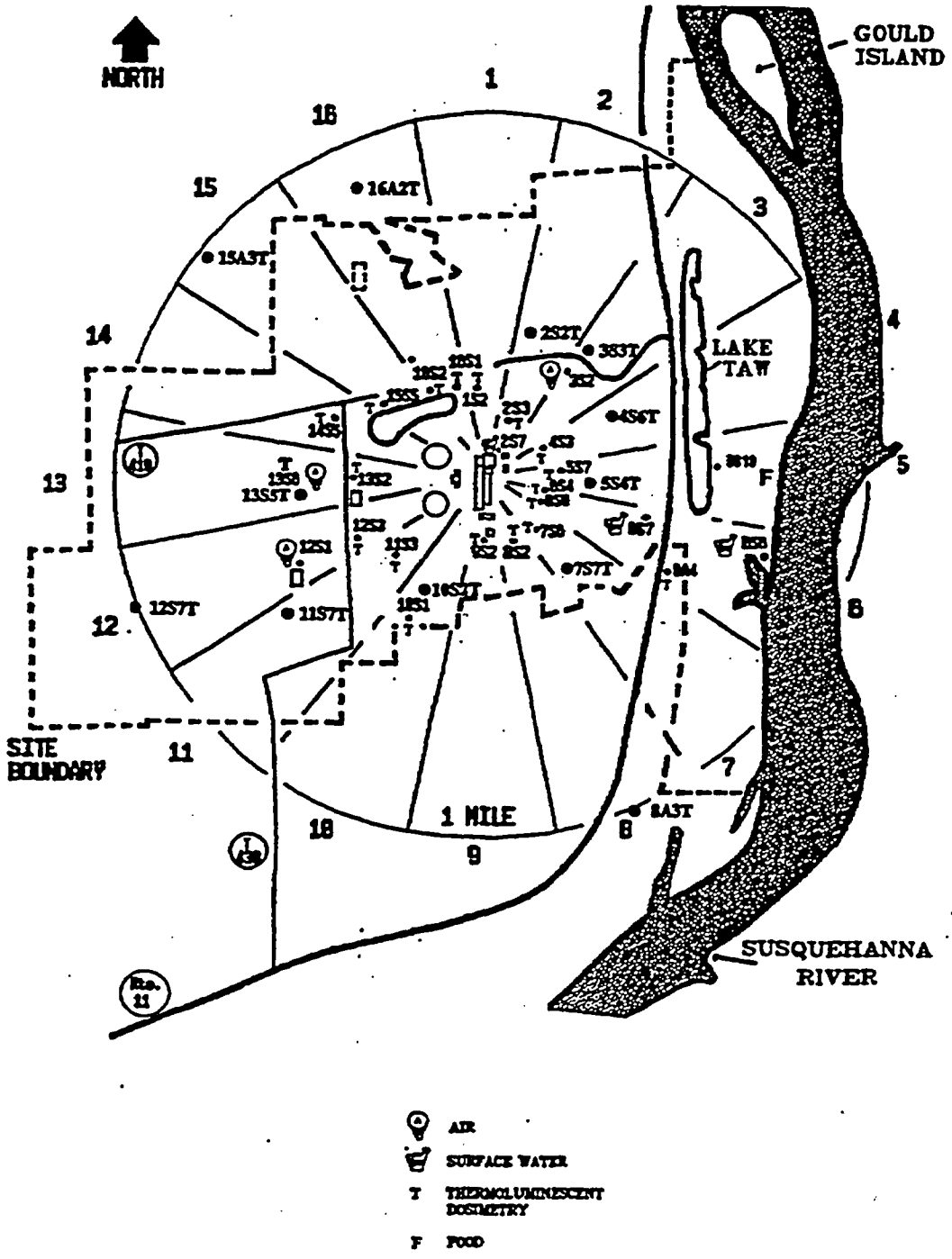

ENVIRONMENTAL MONITORING LOCATIONS GREATER THAN ONE MILE FROM SSES

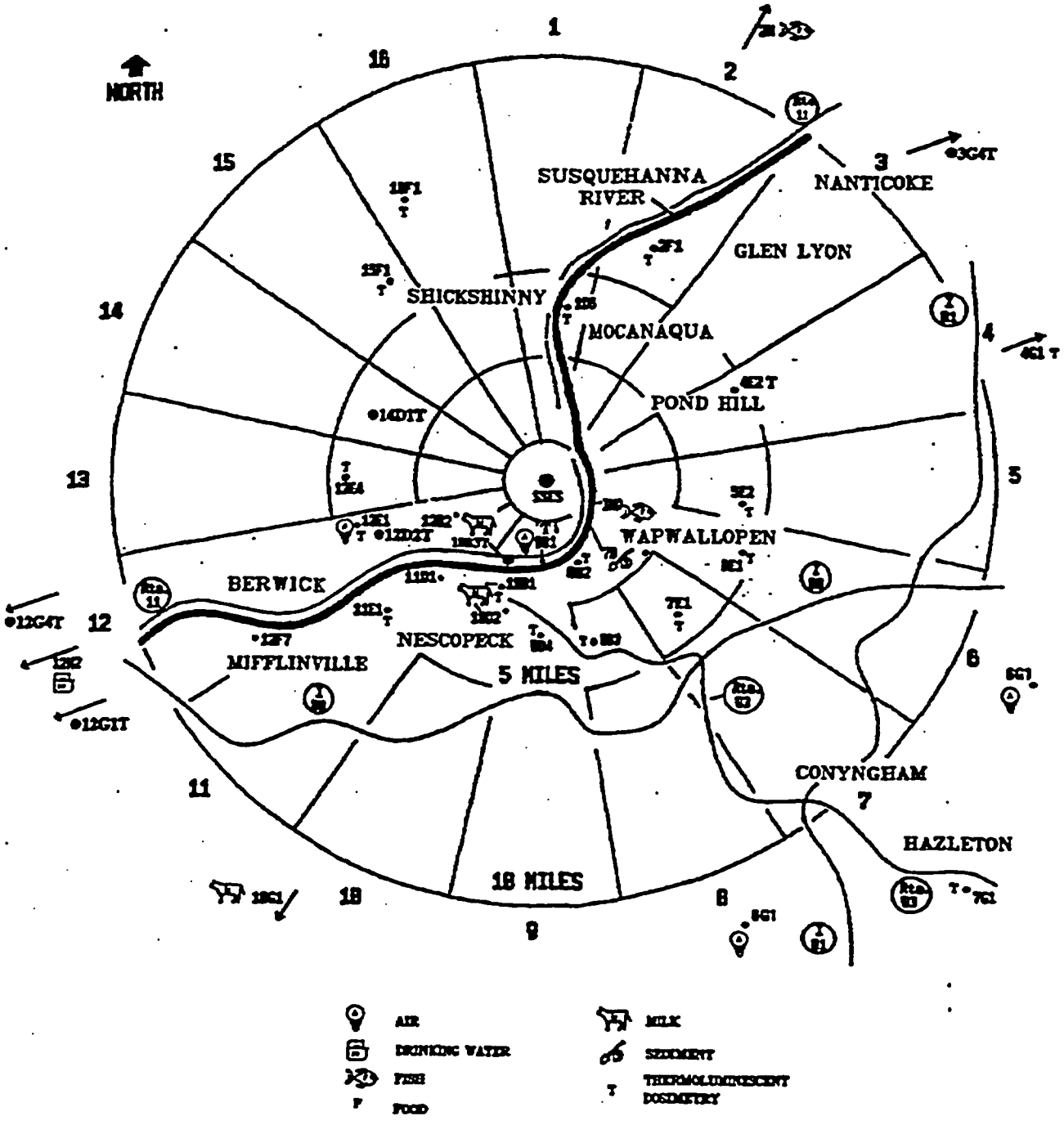

OPERATIONAL RADIOLOGICAL ENVIRONMENTAL MONITORING PROGRAM

Exposure Pathways and/or Sample	Number of Samples and Locations*				Sampling and Collection Frequency	Type and Frequency of Analysis
Airborne						
Radioiodine and Particulates*	12S1	0.4 mi	WSW	West Building Laboratory	Continual sampler operation with sample collection weekly.	Radioiodine Canister: analyze weekly for I-131.[a] Particulate Sample: Analyze for gross beta radioactivity following filter change. Perform isotopic analysis on composite sample (by location) quarterly.[b]
	12E1	4.7 mi	WSW	Berwick Hospital		
	3S2	0.5 mi	NE	SSES Backup Met. Tower		
	13S6	0.4 mi	W	Former Laydown Area, West of Confer's Lane		
	6G1	13.5 mi	ESE	Freeland Substation[c]		
	8G1	12.2 mi.	SSE	PPL System Facilities[c] Center, Humbolt Industrial Park		
Direct Radiation						
	1D5	4.0 mi	N	Mocanaqua Sewage Treatment Plant	Quarterly	Gamma Dose: Quarterly.
	1S2	0.2 mi	N	Perimeter Fence		
	2S2	0.9 mi	NNE	Energy Information Center		
	2S3	0.2 mi	NNE	Perimeter Fence		
	2F1	5.9 mi	NNE	St. Adalberts Cemetery		
	3E1	4.7 mi	NE	Webb Residence- Lilly Lake		
	3G4	17 mi	NE	Wilkes Barre Service Center		
	3S2	0.5 mi	NE	SSES Backup Met. Tower		
	3S3	0.9 mi	NE	ANSP Riverlands Garden		
	4S3	0.2 mi	ENE	West of SSES APF		
	4E2	4.7 mi	ENE	Ruckles Hill & Pond Hill Roads Intersection		
	4G1	14 mi	ENE	Crestwood Industrial Park[c]		
	4S6	0.7 mi	ENE	Riverlands		
	5E2	4.5 mi	E	Bloss Farm		
	5S7	0.3 mi	E	Perimeter Fence		
	5S4	0.8 mi	E	West of Environmental Laboratory		
	6S4	0.2 mi	ESE	Perimeter Fence		
	6A4	0.6 mi	ESE	Restaurant		
	6E1	4.7 mi	ESE	St. James Church		

OPERATIONAL RADIOLOGICAL ENVIRONMENTAL MONITORING PROGRAM

Exposure Pathways and/or Sample	Number of Samples and Locations*				Sampling and Collection Frequency	Type and Frequency of Analysis
	6S9	0.2 mi	ESE	Perimeter Fence	Quarterly	Gamma Dose: Quarterly.
	7S6	0.2 mi	SE	Perimeter Fence		
	7E1	4.2 mi	SE	Harwood Transmission Line Pole #2		
	7G1	14 mi	SE	PPL Hazleton Complex[c]		
	7S7	0.4 mi	SE	End of Kline's Road		
	8A3	0.9 mi	SSE	PPL Wetlands Sign (U.S. Route 11)		
	8S2	0.2 mi	SSE	Perimeter Fence		
	8B2	1.4 mi	SSE	LaWall Residence		
	8D3	4.0 mi	SSE	Mowry Residence		
	9B1	1.3 mi	S	Tansmission Line – east of Route 11		
	9S2	0.2 mi	S	Security Fence		
	9D4	3.6 mi	S	Country Folk Store		
	10B3	1.7 mi	SSW	Castek Inc.		
	10S1	0.4 mi	SSW	Post South of Switching Station		
	10S2	0.2 mi	SSW	Security Fence		
	10D1	3.0 mi	SSW	Ross Ryman Farm		
	11S3	0.3 mi	SW	Security Fence		
	11E1	4.7 mi	SW	Thomas Residence		
	11S7	0.4 mi	SW	SSES Access Road Gate #50		
	12D2	3.7 mi	WSW	Dagostin Residence		
	12S3	0.4 mi	WSW	Perimeter Fence		
	12E1	4.7 mi	WSW	Berwick Hospital		
	12G1	15 mi	WSW	PPL Bloomsburg Service Center		
	12G4	10 mi	WSW	Naus Residence		
	12S1	0.4 mi	WSW	SSES West Building		
	12S7	1.1 mi	WSW	Kisner Residence		
	13S2	0.4 mi	W	Perimeter Fence		
	13S5	0.4 mi	W	Perimeter Fence		
	13S6	0.4 mi	W	Former Laydown Area-west of Confer's Lane		
	13E4	4.1 mi	W	Kessler Farm		
	14D1	3.6 mi	WNW	Moore's Hill/Mingle Inn Road Intersection		
	14S5	0.5 mi	WNW	Beach Grove Rd. & Confer's Lane Intersection		
	15A3	0.9 mi	NW	Hosler Residence		
	15F1	5.4 mi	NW	Zawatski Farm		
	15S5	0.4 mi	NW	Perimeter Fence		
	16A2	0.8 mi	NNW	Benkinney Residence		
	16S1	0.3 mi	NNW	Perimeter Fence		
	16S2	0.3 mi	NNW	Perimeter Fence		
	16F1	7.8	NNW	Hidlay Residence		

OPERATIONAL RADIOLOGICAL ENVIRONMENTAL MONITORING PROGRAM

Exposure Pathways and/or Sample	Number of Samples and Locations*				Sampling and Collection Frequency	Type and Frequency of Analysis
Waterborne						
Surface	2S7	Cooling Tower Blowdown discharge line (restricted area)[f]			Monthly composite	Gamma isotopic analysis. Composite tritium analysis at least quarterly.
	6S6	river water intake line[c]				
	6S7	Cooling Tower Blowdown discharge line (STP)[f]				
Drinking	12H2	Danville Water Company (Approximately 30 miles downstream)			Monthly composite[d]	Gross beta and gamma isotopic analyses monthly. Composite for tritium analysis at least quarterly.
Sediment from Shoreline	7B	1.2 mi	SE	Bell Bend	Semi-annually	Gamma isotopic analysis semi-annually.
Milk**	12B2	1.7 mi	WSW	Berger Farm	Semi-monthly when animals are on pasture, monthly otherwise	Gamma isotopic and I-131 analysis of each sample.
	10G1	14.0 mi.	SSW	Davis Farm[c]		
	10D2	3.1 mi.	SSW	Ray Ryman Farm		
	10D1	3.0 mi.	SSW	R&C Ryman Farm		
Fish and Invertebrates	IND	Outfall area			Semi-annually. One sample[e] from each of two recreationally important species from any of the following families: bullhead catfish, sunfish, pikes, or perches.	Gamma isotopic on edible portions.
	2H	Falls, Pa[c] (Approximately 30 mi NNE)				
Food Products	11D1	3.3 mi	SW	Zehner Farm (vegetable)	At time of harvest	Gamma isotopic on edible portions.
	12F7	8.3 mi	WSW	Lupini Farm (vegetable)		

* The location of samples and equipment were designed using the guidance in the Branch Technical Position to NRC Reg. Guide 4.8, Rev. 1, Nov. 1979, Reg. Guide 4.8 1975 and ORP/SID 72-2 Environmental Radioactivity Surveillance Guide. Therefore, the airborne sampler locations were based upon X/Q and/or D/Q.

** If a milk sample is unavailable for more than two sampling periods from one or more of the locations, a vegetation sample shall be substituted until a suitable milk location is evaluated. Such an occurrence will be documented in the REMP annual report.

[a] The charcoal sampler cartridges used in the airborne radioiodine sampling program are designed and tested by the manufacturer to assure a high quality of radioiodine capture. A certificate from the manufacturer is supplied and retained with each batch of cartridges certifying the percent reduction of radioiodine versus air flow rate through the cartridge.

[b] Gross beta activity calculations will be performed in accordance with the procedures of the designated REMP analysis laboratory.

[c] Control sample location.

[d] Two-week composite if calculated doses due to consumption of water exceed one millirem per year. In these cases, I-131 analyses will be performed.

[e] The sample collector will determine the species based upon availability, which may vary seasonally and yearly.

[f] A sample from either or both locations 2S7 and 6S7 will be collected and analyzed according to the required frequencies.

REMP DOSE FACTORS FOR ADULT AGE GROUP: MILK SAMPLE (Page 1 of 2)

mrem-liter/pCi-yr

NUCLIDE	BONE	LIVER	T.BODY	THYROID	KIDNEY	LUNG	GI-LLI
H-3	0.00E+00	3.25E-05	3.25E-05	3.25E-05	3.25E-05	3.25E-05	3.25E-05
C-14	8.80E-04	1.76E-04	1.76E-04	1.76E-04	1.76E-04	1.76E-04	1.76E-04
Na-24	0.00E+00	0.00E+00	0.00E+00	0.00E+00	0.00E+00	0.00E+00	0.00E+00
P-32	5.43E-02	3.38E-03	2.10E-03	0.00E+00	0.00E+00	0.00E+00	6.11E-03
Cr-51	0.00E+00	0.00E+00	7.84E-07	4.69E-07	1.73E-07	1.04E-06	1.97E-04
Mn-54	0.00E+00	1.41E-03	2.69E-04	0.00E+00	4.20E-04	0.00E+00	4.32E-03
Mn-56	0.00E+00	0.00E+00	0.00E+00	0.00E+00	0.00E+00	0.00E+00	0.00E+00
Fe-55	8.51E-04	5.88E-04	1.37E-04	0.00E+00	0.00E+00	3.28E-04	3.37E-04
Fe-59	1.30E-03	3.07E-03	1.18E-03	0.00E+00	0.00E+00	8.56E-04	1.02E-02
Co-58	0.00E+00	2.26E-04	5.08E-04	0.00E+00	0.00E+00	0.00E+00	4.59E-03
Co-60	0.00E+00	6.63E-04	1.46E-03	0.00E+00	0.00E+00	0.00E+00	1.25E-02
Ni-63	4.03E-02	2.79E-03	1.35E-03	0.00E+00	0.00E+00	0.00E+00	5.83E-04
Ni-65	0.00E+00	0.00E+00	0.00E+00	0.00E+00	0.00E+00	0.00E+00	0.00E+00
Cu-64	0.00E+00	0.00E+00	0.00E+00	0.00E+00	0.00E+00	0.00E+00	0.00E+00
Zn-65	1.49E-03	4.75E-03	2.15E-03	0.00E+00	3.17E-03	0.00E+00	2.99E-03
Zn-69	0.00E+00	0.00E+00	0.00E+00	0.00E+00	0.00E+00	0.00E+00	0.00E+00
Br-83	0.00E+00	0.00E+00	0.00E+00	0.00E+00	0.00E+00	0.00E+00	0.00E+00
Br-84	0.00E+00	0.00E+00	0.00E+00	0.00E+00	0.00E+00	0.00E+00	0.00E+00
Br-85	0.00E+00	0.00E+00	0.00E+00	0.00E+00	0.00E+00	0.00E+00	0.00E+00
Rb-86	0.00E+00	6.07E-03	2.83E-03	0.00E+00	0.00E+00	0.00E+00	1.20E-03
Rb-88	0.00E+00	0.00E+00	0.00E+00	0.00E+00	0.00E+00	0.00E+00	0.00E+00
Rb-89	0.00E+00	0.00E+00	0.00E+00	0.00E+00	0.00E+00	0.00E+00	0.00E+00
Sr-89	9.29E-02	0.00E+00	2.67E-03	0.00E+00	0.00E+00	0.00E+00	1.49E-02
Sr-90	2.35E+00	0.00E+00	5.77E-01	0.00E+00	0.00E+00	0.00E+00	6.79E-02
Sr-91	0.00E+00	0.00E+00	0.00E+00	0.00E+00	0.00E+00	0.00E+00	0.00E+00
Sr-92	0.00E+00	0.00E+00	0.00E+00	0.00E+00	0.00E+00	0.00E+00	0.00E+00
Y-90	0.00E+00	0.00E+00	0.00E+00	0.00E+00	0.00E+00	0.00E+00	0.00E+00
Y-91m	0.00E+00	0.00E+00	0.00E+00	0.00E+00	0.00E+00	0.00E+00	0.00E+00
Y-91	4.27E-05	0.00E+00	1.14E-06	0.00E+00	0.00E+00	0.00E+00	2.35E-02
Y-92	0.00E+00	0.00E+00	0.00E+00	0.00E+00	0.00E+00	0.00E+00	0.00E+00
Y-93	0.00E+00	0.00E+00	0.00E+00	0.00E+00	0.00E+00	0.00E+00	0.00E+00
Zr-95	9.22E-06	2.96E-06	2.00E-06	0.00E+00	4.64E-06	0.00E+00	9.37E-03
Zr-97	0.00E+00	0.00E+00	0.00E+00	0.00E+00	0.00E+00	0.00E+00	0.00E+00
Nb-95	1.85E-06	1.03E-06	5.54E-07	0.00E+00	1.02E-06	0.00E+00	6.26E-03
Mo-99	0.00E+00	0.00E+00	0.00E+00	0.00E+00	0.00E+00	0.00E+00	0.00E+00
Tc-99m	0.00E+00	0.00E+00	0.00E+00	0.00E+00	0.00E+00	0.00E+00	0.00E+00

REMP DOSE FACTORS FOR ADULT AGE GROUP: MILK SAMPLE (Page 2 of 2)

mrem-liter/pCi-yr

NUCLIDE	BONE	LIVER	T.BODY	THYROID	KIDNEY	LUNG	GI-LLI
Tc-101	0.00E+00	0.00E+00	0.00E+00	0.00E+00	0.00E+00	0.00E+00	0.00E+00
Ru-103	5.54E-05	0.00E+00	2.39E-05	0.00E+00	2.11E-04	0.00E+00	6.46E-03
Ru-105	0.00E+00	0.00E+00	0.00E+00	0.00E+00	0.00E+00	0.00E+00	0.00E+00
Ru-106	8.49E-04	0.00E+00	1.07E-04	0.00E+00	1.64E-03	0.00E+00	5.50E-02
Ag-110m	4.93E-05	4.56E-05	2.71E-05	0.00E+00	8.97E-05	0.00E+00	1.86E-02
Te-125m	8.11E-04	2.94E-04	1.09E-04	2.44E-04	3.30E-03	0.00E+00	3.24E-03
Te-127m	2.07E-03	7.41E-04	2.53E-04	5.30E-04	8.42E-03	0.00E+00	6.95E-03
Te-127	0.00E+00	0.00E+00	0.00E+00	0.00E+00	0.00E+00	0.00E+00	0.00E+00
Te-129m	3.42E-03	1.28E-03	5.41E-04	1.18E-03	1.43E-02	0.00E+00	1.72E-02
Te-129	9.34E-06	3.51E-06	2.28E-06	7.17E-06	3.93E-05	0.00E+00	7.05E-06
Te-131m	0.00E+00	0.00E+00	0.00E+00	0.00E+00	0.00E+00	0.00E+00	0.00E+00
Te-131	0.00E+00	0.00E+00	0.00E+00	0.00E+00	0.00E+00	0.00E+00	0.00E+00
Te-132	0.00E+00	0.00E+00	0.00E+00	0.00E+00	0.00E+00	0.00E+00	0.00E+00
I-130	0.00E+00	0.00E+00	0.00E+00	0.00E+00	0.00E+00	0.00E+00	0.00E+00
I-131	1.09E-03	1.55E-03	8.90E-04	5.09E-01	2.66E-03	0.00E+00	4.10E-04
I-132	0.00E+00	0.00E+00	0.00E+00	0.00E+00	0.00E+00	0.00E+00	0.00E+00
I-133	0.00E+00	0.00E+00	0.00E+00	0.00E+00	0.00E+00	0.00E+00	0.00E+00
I-134	0.00E+00	0.00E+00	0.00E+00	0.00E+00	0.00E+00	0.00E+00	0.00E+00
I-135	0.00E+00	0.00E+00	0.00E+00	0.00E+00	0.00E+00	0.00E+00	0.00E+00
Cs-134	1.92E-02	4.58E-02	3.74E-02	0.00E+00	1.48E-02	4.92E-03	8.01E-04
Cs-136	1.82E-03	7.17E-03	5.16E-03	0.00E+00	3.99E-03	5.47E-04	8.15E-04
Cs-137	2.47E-02	3.38E-02	2.21E-02	0.00E+00	1.15E-02	3.81E-03	6.54E-04
Cs-138	0.00E+00	0.00E+00	0.00E+00	0.00E+00	0.00E+00	0.00E+00	0.00E+00
Ba-139	0.00E+00	0.00E+00	0.00E+00	0.00E+00	0.00E+00	0.00E+00	0.00E+00
Ba-140	5.65E-03	7.09E-06	3.70E-04	0.00E+00	2.41E-06	4.06E-06	1.16E-02
Ba-141	0.00E+00	0.00E+00	0.00E+00	0.00E+00	0.00E+00	0.00E+00	0.00E+00
Ba-142	0.00E+00	0.00E+00	0.00E+00	0.00E+00	0.00E+00	0.00E+00	0.00E+00
La-140	0.00E+00	0.00E+00	0.00E+00	0.00E+00	0.00E+00	0.00E+00	0.00E+00
La-142	0.00E+00	0.00E+00	0.00E+00	0.00E+00	0.00E+00	0.00E+00	0.00E+00
Ce-141	2.78E-06	1.88E-06	2.13E-07	0.00E+00	8.73E-07	0.00E+00	7.19E-03
Ce-143	0.00E+00	0.00E+00	0.00E+00	0.00E+00	0.00E+00	0.00E+00	0.00E+00
Ce-144	1.51E-04	6.29E-05	8.08E-06	0.00E+00	3.73E-05	0.00E+00	5.09E-02
Pr-143	2.57E-06	1.03E-06	1.28E-07	0.00E+00	5.96E-07	0.00E+00	1.13E-02
Pr-144	0.00E+00	0.00E+00	0.00E+00	0.00E+00	0.00E+00	0.00E+00	0.00E+00
Nd-147	1.72E-06	1.99E-06	1.19E-07	0.00E+00	1.16E-06	0.00E+00	9.54E-03
W-187	0.00E+00	0.00E+00	0.00E+00	0.00E+00	0.00E+00	0.00E+00	0.00E+00
Np-239	0.00E+00	0.00E+00	0.00E+00	0.00E+00	0.00E+00	0.00E+00	0.00E+00

REMP DOSE FACTORS FOR ADULT AGE GROUP: LEAFY VEG. SAMPLE (Page 1 of 2)
mrem-kg/pCi-yr

NUCLIDE	BONE	LIVER	T.BODY	THYROID	KIDNEY	LUNG	GI-LLI
H-3	0.00E+00	6.72E-06	6.72E-06	6.72E-06	6.72E-06	6.72E-06	6.72E-06
C-14	1.82E-04	3.64E-05	3.64E-05	3.64E-05	3.64E-05	3.64E-05	3.64E-05
Na-24	0.00E+00	0.00E+00	0.00E+00	0.00E+00	0.00E+00	0.00E+00	0.00E+00
P-32	1.18E-02	7.32E-04	4.55E-04	0.00E+00	0.00E+00	0.00E+00	1.32E-03
Cr-51	0.00E+00	0.00E+00	1.66E-07	9.92E-08	3.66E-08	2.20E-07	4.18E-05
Mn-54	0.00E+00	2.92E-04	5.57E-05	0.00E+00	8.68E-05	0.00E+00	8.94E-04
Mn-56	0.00E+00	0.00E+00	0.00E+00	0.00E+00	0.00E+00	0.00E+00	0.00E+00
Fe-55	1.76E-04	1.22E-04	2.83E-05	0.00E+00	0.00E+00	6.78E-05	6.97E-05
Fe-59	2.73E-04	6.43E-04	2.46E-04	0.00E+00	0.00E+00	1.80E-04	2.14E-03
Co-58	0.00E+00	4.72E-05	1.06E-04	0.00E+00	0.00E+00	0.00E+00	9.57E-04
Co-60	0.00E+00	1.37E-04	3.02E-04	0.00E+00	0.00E+00	0.00E+00	2.57E-03
Ni-63	8.32E-03	5.77E-04	2.79E-04	0.00E+00	0.00E+00	0.00E+00	1.20E-04
Ni-65	0.00E+00	0.00E+00	0.00E+00	0.00E+00	0.00E+00	0.00E+00	0.00E+00
Cu-64	0.00E+00	0.00E+00	0.00E+00	0.00E+00	0.00E+00	0.00E+00	0.00E+00
Zn-65	3.09E-04	9.83E-04	4.44E-04	0.00E+00	6.57E-04	0.00E+00	6.19E-04
Zn-69	0.00E+00	0.00E+00	0.00E+00	0.00E+00	0.00E+00	0.00E+00	0.00E+00
Br-83	0.00E+00	0.00E+00	0.00E+00	0.00E+00	0.00E+00	0.00E+00	0.00E+00
Br-84	0.00E+00	0.00E+00	0.00E+00	0.00E+00	0.00E+00	0.00E+00	0.00E+00
Br-85	0.00E+00	0.00E+00	0.00E+00	0.00E+00	0.00E+00	0.00E+00	0.00E+00
Rb-86	0.00E+00	1.30E-03	6.06E-04	0.00E+00	0.00E+00	0.00E+00	2.57E-04
Rb-88	0.00E+00	0.00E+00	0.00E+00	0.00E+00	0.00E+00	0.00E+00	0.00E+00
Rb-89	0.00E+00	0.00E+00	0.00E+00	0.00E+00	0.00E+00	0.00E+00	0.00E+00
Sr-89	1.94E-02	0.00E+00	5.58E-04	0.00E+00	0.00E+00	0.00E+00	3.12E-03
Sr-90	4.85E-01	0.00E+00	1.19E-01	0.00E+00	0.00E+00	0.00E+00	1.40E-02
Sr-91	0.00E+00	0.00E+00	0.00E+00	0.00E+00	0.00E+00	0.00E+00	0.00E+00
Sr-92	0.00E+00	0.00E+00	0.00E+00	0.00E+00	0.00E+00	0.00E+00	0.00E+00
Y-90	0.00E+00	0.00E+00	0.00E+00	0.00E+00	0.00E+00	0.00E+00	0.00E+00
Y-91m	0.00E+00	0.00E+00	0.00E+00	0.00E+00	0.00E+00	0.00E+00	0.00E+00
Y-91	8.92E-06	0.00E+00	2.38E-07	0.00E+00	0.00E+00	0.00E+00	4.91E-03
Y-92	0.00E+00	0.00E+00	0.00E+00	0.00E+00	0.00E+00	0.00E+00	0.00E+00
Y-93	0.00E+00	0.00E+00	0.00E+00	0.00E+00	0.00E+00	0.00E+00	0.00E+00
Zr-95	1.92E-06	6.17E-07	4.18E-07	0.00E+00	9.69E-07	0.00E+00	1.96E-03
Zr-97	0.00E+00	0.00E+00	0.00E+00	0.00E+00	0.00E+00	0.00E+00	0.00E+00
Nb-95	3.90E-07	2.17E-07	1.17E-07	0.00E+00	2.15E-07	0.00E+00	1.32E-03
Mo-99	0.00E+00	0.00E+00	0.00E+00	0.00E+00	0.00E+00	0.00E+00	0.00E+00
Tc-99m	0.00E+00	0.00E+00	0.00E+00	0.00E+00	0.00E+00	0.00E+00	0.00E+00

REMP DOSE FACTORS FOR ADULT AGE GROUP: LEAFY VEG. SAMPLE (Page 2 of 2)
mrem-kg/pCi-yr

NUCLIDE	BONE	LIVER	T.BODY	THYROID	KIDNEY	LUNG	GI-LLI
Tc-101	0.00E+00	0.00E+00	0.00E+00	0.00E+00	0.00E+00	0.00E+00	0.00E+00
Ru-103	1.16E-05	0.00E+00	5.01E-06	0.00E+00	4.44E-05	0.00E+00	1.36E-03
Ru-105	0.00E+00	0.00E+00	0.00E+00	0.00E+00	0.00E+00	0.00E+00	0.00E+00
Ru-106	1.76E-04	0.00E+00	2.22E-05	0.00E+00	3.39E-04	0.00E+00	1.14E-02
Ag-110m	1.02E-05	9.45E-06	5.61E-06	0.00E+00	1.86E-05	0.00E+00	3.85E-03
Te-125m	1.69E-04	6.14E-05	2.27E-05	5.10E-05	6.89E-04	0.00E+00	6.77E-04
Te-127m	4.31E-04	1.54E-04	5.25E-05	1.10E-04	1.75E-03	0.00E+00	1.44E-03
Te-127	0.00E+00	0.00E+00	0.00E+00	0.00E+00	0.00E+00	0.00E+00	0.00E+00
Te-129m	7.21E-04	2.69E-04	1.14E-04	2.48E-04	3.01E-03	0.00E+00	3.63E-03
Te-129	1.97E-06	7.40E-07	4.80E-07	1.51E-06	8.28E-06	0.00E+00	1.49E-06
Te-131m	0.00E+00	0.00E+00	0.00E+00	0.00E+00	0.00E+00	0.00E+00	0.00E+00
Te-131	0.00E+00	0.00E+00	0.00E+00	0.00E+00	0.00E+00	0.00E+00	0.00E+00
Te-132	0.00E+00	0.00E+00	0.00E+00	0.00E+00	0.00E+00	0.00E+00	0.00E+00
I-130	0.00E+00	0.00E+00	0.00E+00	0.00E+00	0.00E+00	0.00E+00	0.00E+00
I-131	2.44E-04	3.49E-04	2.00E-04	1.14E-01	5.99E-04	0.00E+00	9.22E-05
I-132	0.00E+00	0.00E+00	0.00E+00	0.00E+00	0.00E+00	0.00E+00	0.00E+00
I-133	0.00E+00	0.00E+00	0.00E+00	0.00E+00	0.00E+00	0.00E+00	0.00E+00
I-134	0.00E+00	0.00E+00	0.00E+00	0.00E+00	0.00E+00	0.00E+00	0.00E+00
I-135	0.00E+00	0.00E+00	0.00E+00	0.00E+00	0.00E+00	0.00E+00	0.00E+00
Cs-134	3.98E-03	9.46E-03	7.74E-03	0.00E+00	3.06E-03	1.02E-03	1.66E-04
Cs-136	3.95E-04	1.56E-03	1.12E-03	0.00E+00	8.68E-04	1.19E-04	1.77E-04
Cs-137	5.10E-03	6.98E-03	4.57E-03	0.00E+00	2.37E-03	7.87E-04	1.35E-04
Cs-138	0.00E+00	0.00E+00	0.00E+00	0.00E+00	0.00E+00	0.00E+00	0.00E+00
Ba-139	0.00E+00	0.00E+00	0.00E+00	0.00E+00	0.00E+00	0.00E+00	0.00E+00
Ba-140	1.23E-03	1.55E-06	8.06E-05	0.00E+00	5.26E-07	8.85E-07	2.53E-03
Ba-141	0.00E+00	0.00E+00	0.00E+00	0.00E+00	0.00E+00	0.00E+00	0.00E+00
Ba-142	0.00E+00	0.00E+00	0.00E+00	0.00E+00	0.00E+00	0.00E+00	0.00E+00
La-140	0.00E+00	0.00E+00	0.00E+00	0.00E+00	0.00E+00	0.00E+00	0.00E+00
La-142	0.00E+00	0.00E+00	0.00E+00	0.00E+00	0.00E+00	0.00E+00	0.00E+00
Ce-141	5.86E-07	3.97E-07	4.50E-08	0.00E+00	1.84E-07	0.00E+00	1.52E-03
Ce-143	0.00E+00	0.00E+00	0.00E+00	0.00E+00	0.00E+00	0.00E+00	0.00E+00
Ce-144	3.12E-05	1.30E-05	1.67E-06	0.00E+00	7.73E-06	0.00E+00	1.05E-02
Pr-143	5.59E-07	2.24E-07	2.77E-08	0.00E+00	1.30E-07	0.00E+00	2.45E-03
Pr-144	0.00E+00	0.00E+00	0.00E+00	0.00E+00	0.00E+00	0.00E+00	0.00E+00
Nd-147	3.78E-07	4.37E-07	2.61E-08	0.00E+00	2.55E-07	0.00E+00	2.10E-03
W-187	0.00E+00	0.00E+00	0.00E+00	0.00E+00	0.00E+00	0.00E+00	0.00E+00
Np-239	0.00E+00	0.00E+00	0.00E+00	0.00E+00	0.00E+00	0.00E+00	0.00E+00

REMP DOSE FACTORS FOR ADULT AGE GROUP: FRUIT SAMPLE (Page 1 of 2)

mrem-kg/pCi-yr

NUCLIDE	BONE	LIVER	T.BODY	THYROID	KIDNEY	LUNG	GI-LLI
H-3	0.00E+00	5.41E-05	5.41E-05	5.41E-05	5.41E-05	5.41E-05	5.41E-05
C-14	1.48E-03	2.95E-04	2.95E-04	2.95E-04	2.95E-04	2.95E-04	2.95E-04
Na-24	0.00E+00	0.00E+00	0.00E+00	0.00E+00	0.00E+00	0.00E+00	0.00E+00
P-32	5.47E-03	3.40E-04	2.11E-04	0.00E+00	0.00E+00	0.00E+00	6.14E-04
Cr-51	0.00E+00	0.00E+00	3.08E-07	1.84E-07	6.79E-08	4.09E-07	7.75E-05
Mn-54	0.00E+00	2.08E-03	3.97E-04	0.00E+00	6.19E-04	0.00E+00	6.37E-03
Mn-56	0.00E+00	0.00E+00	0.00E+00	0.00E+00	0.00E+00	0.00E+00	0.00E+00
Fe-55	1.37E-03	9.47E-04	2.21E-04	0.00E+00	0.00E+00	5.28E-04	5.43E-04
Fe-59	8.89E-04	2.09E-03	8.01E-04	0.00E+00	0.00E+00	5.84E-04	6.96E-03
Co-58	0.00E+00	2.15E-04	4.83E-04	0.00E+00	0.00E+00	0.00E+00	4.36E-03
Co-60	0.00E+00	1.09E-03	2.40E-03	0.00E+00	0.00E+00	0.00E+00	2.05E-02
Ni-63	6.75E-02	4.68E-03	2.26E-03	0.00E+00	0.00E+00	0.00E+00	9.76E-04
Ni-65	0.00E+00	0.00E+00	0.00E+00	0.00E+00	0.00E+00	0.00E+00	0.00E+00
Cu-64	0.00E+00	0.00E+00	0.00E+00	0.00E+00	0.00E+00	0.00E+00	0.00E+00
Zn-65	2.12E-03	6.75E-03	3.05E-03	0.00E+00	4.52E-03	0.00E+00	4.25E-03
Zn-69	0.00E+00	0.00E+00	0.00E+00	0.00E+00	0.00E+00	0.00E+00	0.00E+00
Br-83	0.00E+00	0.00E+00	0.00E+00	0.00E+00	0.00E+00	0.00E+00	0.00E+00
Br-84	0.00E+00	0.00E+00	0.00E+00	0.00E+00	0.00E+00	0.00E+00	0.00E+00
Br-85	0.00E+00	0.00E+00	0.00E+00	0.00E+00	0.00E+00	0.00E+00	0.00E+00
Rb-86	0.00E+00	1.18E-03	5.50E-04	0.00E+00	0.00E+00	0.00E+00	2.33E-04
Rb-88	0.00E+00	0.00E+00	0.00E+00	0.00E+00	0.00E+00	0.00E+00	0.00E+00
Rb-89	0.00E+00	0.00E+00	0.00E+00	0.00E+00	0.00E+00	0.00E+00	0.00E+00
Sr-89	7.03E-02	0.00E+00	2.02E-03	0.00E+00	0.00E+00	0.00E+00	1.13E-02
Sr-90	3.93E+00	0.00E+00	9.63E-01	0.00E+00	0.00E+00	0.00E+00	1.13E-01
Sr-91	0.00E+00	0.00E+00	0.00E+00	0.00E+00	0.00E+00	0.00E+00	0.00E+00
Sr-92	0.00E+00	0.00E+00	0.00E+00	0.00E+00	0.00E+00	0.00E+00	0.00E+00
Y-90	0.00E+00	0.00E+00	0.00E+00	0.00E+00	0.00E+00	0.00E+00	0.00E+00
Y-91m	0.00E+00	0.00E+00	0.00E+00	0.00E+00	0.00E+00	0.00E+00	0.00E+00
Y-91	3.60E-05	0.00E+00	9.63E-07	0.00E+00	0.00E+00	0.00E+00	1.98E-02
Y-92	0.00E+00	0.00E+00	0.00E+00	0.00E+00	0.00E+00	0.00E+00	0.00E+00
Y-93	0.00E+00	0.00E+00	0.00E+00	0.00E+00	0.00E+00	0.00E+00	0.00E+00
Zr-95	8.26E-06	2.65E-06	1.79E-06	0.00E+00	4.15E-06	0.00E+00	8.39E-03
Zr-97	0.00E+00	0.00E+00	0.00E+00	0.00E+00	0.00E+00	0.00E+00	0.00E+00
Nb-95	9.88E-07	5.49E-07	2.95E-07	0.00E+00	5.43E-07	0.00E+00	3.33E-03
Mo-99	0.00E+00	0.00E+00	0.00E+00	0.00E+00	0.00E+00	0.00E+00	0.00E+00
Tc-99m	0.00E+00	0.00E+00	0.00E+00	0.00E+00	0.00E+00	0.00E+00	0.00E+00

REMP DOSE FACTORS FOR ADULT AGE GROUP: FRUIT SAMPLE (Page 2 of 2)
mrem-kg/pCi-yr

NUCLIDE	BONE	LIVER	T.BODY	THYROID	KIDNEY	LUNG	GI-LLI
Tc-101	0.00E+00	0.00E+00	0.00E+00	0.00E+00	0.00E+00	0.00E+00	0.00E+00
Ru-103	3.34E-05	0.00E+00	1.44E-05	0.00E+00	1.28E-04	0.00E+00	3.90E-03
Ru-105	0.00E+00	0.00E+00	0.00E+00	0.00E+00	0.00E+00	0.00E+00	0.00E+00
Ru-106	1.28E-03	0.00E+00	1.62E-04	0.00E+00	2.47E-03	0.00E+00	8.27E-02
Ag-110m	7.04E-05	6.52E-05	3.87E-05	0.00E+00	1.28E-04	0.00E+00	2.66E-02
Te-125m	6.80E-04	2.46E-04	9.11E-05	2.05E-04	2.77E-03	0.00E+00	2.72E-03
Te-127m	2.40E-03	8.59E-04	2.93E-04	6.14E-04	9.76E-03	0.00E+00	8.06E-03
Te-127	0.00E+00	0.00E+00	0.00E+00	0.00E+00	0.00E+00	0.00E+00	0.00E+00
Te-129m	1.73E-03	6.47E-04	2.74E-04	5.96E-04	7.24E-03	0.00E+00	8.73E-03
Te-129	4.74E-06	1.78E-06	1.15E-06	3.63E-06	1.99E-05	0.00E+00	3.57E-06
Te-131m	0.00E+00	0.00E+00	0.00E+00	0.00E+00	0.00E+00	0.00E+00	0.00E+00
Te-131	0.00E+00	0.00E+00	0.00E+00	0.00E+00	0.00E+00	0.00E+00	0.00E+00
Te-132	0.00E+00	0.00E+00	0.00E+00	0.00E+00	0.00E+00	0.00E+00	0.00E+00
I-130	0.00E+00	0.00E+00	0.00E+00	0.00E+00	0.00E+00	0.00E+00	0.00E+00
I-131	1.23E-05	1.75E-05	1.01E-05	5.75E-03	3.01E-05	0.00E+00	4.63E-06
I-132	0.00E+00	0.00E+00	0.00E+00	0.00E+00	0.00E+00	0.00E+00	0.00E+00
I-133	0.00E+00	0.00E+00	0.00E+00	0.00E+00	0.00E+00	0.00E+00	0.00E+00
I-134	0.00E+00	0.00E+00	0.00E+00	0.00E+00	0.00E+00	0.00E+00	0.00E+00
I-135	0.00E+00	0.00E+00	0.00E+00	0.00E+00	0.00E+00	0.00E+00	0.00E+00
Cs-134	3.06E-02	7.28E-02	5.95E-02	0.00E+00	2.36E-02	7.82E-03	1.27E-03
Cs-136	1.44E-04	5.67E-04	4.08E-04	0.00E+00	3.15E-04	4.32E-05	6.44E-05
Cs-137	4.13E-02	5.65E-02	3.70E-02	0.00E+00	1.92E-02	6.37E-03	1.09E-03
Cs-138	0.00E+00	0.00E+00	0.00E+00	0.00E+00	0.00E+00	0.00E+00	0.00E+00
Ba-139	0.00E+00	0.00E+00	0.00E+00	0.00E+00	0.00E+00	0.00E+00	0.00E+00
Ba-140	4.09E-04	5.13E-07	2.68E-05	0.00E+00	1.74E-07	2.94E-07	8.41E-04
Ba-141	0.00E+00	0.00E+00	0.00E+00	0.00E+00	0.00E+00	0.00E+00	0.00E+00
Ba-142	0.00E+00	0.00E+00	0.00E+00	0.00E+00	0.00E+00	0.00E+00	0.00E+00
La-140	0.00E+00	0.00E+00	0.00E+00	0.00E+00	0.00E+00	0.00E+00	0.00E+00
La-142	0.00E+00	0.00E+00	0.00E+00	0.00E+00	0.00E+00	0.00E+00	0.00E+00
Ce-141	1.35E-06	9.16E-07	1.04E-07	0.00E+00	4.25E-07	0.00E+00	3.50E-03
Ce-143	0.00E+00	0.00E+00	0.00E+00	0.00E+00	0.00E+00	0.00E+00	0.00E+00
Ce-144	2.19E-04	9.16E-05	1.18E-05	0.00E+00	5.44E-05	0.00E+00	7.41E-02
Pr-143	2.23E-07	8.93E-08	1.10E-08	0.00E+00	5.16E-08	0.00E+00	9.76E-04
Pr-144	0.00E+00	0.00E+00	0.00E+00	0.00E+00	0.00E+00	0.00E+00	0.00E+00
Nd-147	7.41E-08	8.56E-08	5.12E-09	0.00E+00	5.01E-08	0.00E+00	4.11E-04
W-187	0.00E+00	0.00E+00	0.00E+00	0.00E+00	0.00E+00	0.00E+00	0.00E+00
Np-239	0.00E+00	0.00E+00	0.00E+00	0.00E+00	0.00E+00	0.00E+00	0.00E+00

REMP DOSE FACTORS FOR ADULT AGE GROUP: MEAT SAMPLE (Page 1 of 2)
mrem-kg/pCi-yr

NUCLIDE	BONE	LIVER	T.BODY	THYROID	KIDNEY	LUNG	GI-LLI
H-3	0.00E+00	1.15E-05	1.15E-05	1.15E-05	1.15E-05	1.15E-05	1.15E-05
C-14	3.12E-04	6.25E-05	6.25E-05	6.25E-05	6.25E-05	6.25E-05	6.25E-05
Na-24	0.00E+00	0.00E+00	0.00E+00	0.00E+00	0.00E+00	0.00E+00	0.00E+00
P-32	8.05E-03	5.00E-04	3.11E-04	0.00E+00	0.00E+00	0.00E+00	9.05E-04
Cr-51	0.00E+00	0.00E+00	1.77E-07	1.06E-07	3.91E-08	2.35E-07	4.46E-05
Mn-54	0.00E+00	4.81E-04	9.18E-05	0.00E+00	1.43E-04	0.00E+00	1.47E-03
Mn-56	0.00E+00	0.00E+00	0.00E+00	0.00E+00	0.00E+00	0.00E+00	0.00E+00
Fe-55	2.98E-04	2.06E-04	4.80E-05	0.00E+00	0.00E+00	1.15E-04	1.18E-04
Fe-59	3.50E-04	8.22E-04	3.15E-04	0.00E+00	0.00E+00	2.30E-04	2.74E-03
Co-58	0.00E+00	6.74E-05	1.51E-04	0.00E+00	0.00E+00	0.00E+00	1.37E-03
Co-60	0.00E+00	2.34E-04	5.15E-04	0.00E+00	0.00E+00	0.00E+00	4.39E-03
Ni-63	1.43E-02	9.91E-04	4.79E-04	0.00E+00	0.00E+00	0.00E+00	2.07E-04
Ni-65	0.00E+00	0.00E+00	0.00E+00	0.00E+00	0.00E+00	0.00E+00	0.00E+00
Cu-64	0.00E+00	0.00E+00	0.00E+00	0.00E+00	0.00E+00	0.00E+00	0.00E+00
Zn-65	5.03E-04	1.60E-03	7.23E-04	0.00E+00	1.07E-03	0.00E+00	1.01E-03
Zn-69	0.00E+00	0.00E+00	0.00E+00	0.00E+00	0.00E+00	0.00E+00	0.00E+00
Br-83	0.00E+00	0.00E+00	0.00E+00	0.00E+00	0.00E+00	0.00E+00	0.00E+00
Br-84	0.00E+00	0.00E+00	0.00E+00	0.00E+00	0.00E+00	0.00E+00	0.00E+00
Br-85	0.00E+00	0.00E+00	0.00E+00	0.00E+00	0.00E+00	0.00E+00	0.00E+00
Rb-86	0.00E+00	1.10E-03	5.14E-04	0.00E+00	0.00E+00	0.00E+00	2.18E-04
Rb-88	0.00E+00	0.00E+00	0.00E+00	0.00E+00	0.00E+00	0.00E+00	0.00E+00
Rb-89	0.00E+00	0.00E+00	0.00E+00	0.00E+00	0.00E+00	0.00E+00	0.00E+00
Sr-89	2.58E-02	0.00E+00	7.39E-04	0.00E+00	0.00E+00	0.00E+00	4.13E-03
Sr-90	8.33E-01	0.00E+00	2.04E-01	0.00E+00	0.00E+00	0.00E+00	2.41E-02
Sr-91	0.00E+00	0.00E+00	0.00E+00	0.00E+00	0.00E+00	0.00E+00	0.00E+00
Sr-92	0.00E+00	0.00E+00	0.00E+00	0.00E+00	0.00E+00	0.00E+00	0.00E+00
Y-90	0.00E+00	0.00E+00	0.00E+00	0.00E+00	0.00E+00	0.00E+00	0.00E+00
Y-91m	0.00E+00	0.00E+00	0.00E+00	0.00E+00	0.00E+00	0.00E+00	0.00E+00
Y-91	1.22E-05	0.00E+00	3.27E-07	0.00E+00	0.00E+00	0.00E+00	6.74E-03
Y-92	0.00E+00	0.00E+00	0.00E+00	0.00E+00	0.00E+00	0.00E+00	0.00E+00
Y-93	0.00E+00	0.00E+00	0.00E+00	0.00E+00	0.00E+00	0.00E+00	0.00E+00
Zr-95	2.69E-06	8.64E-07	5.85E-07	0.00E+00	1.36E-06	0.00E+00	2.74E-03
Zr-97	0.00E+00	0.00E+00	0.00E+00	0.00E+00	0.00E+00	0.00E+00	0.00E+00
Nb-95	4.61E-07	2.56E-07	1.38E-07	0.00E+00	2.53E-07	0.00E+00	1.56E-03
Mo-99	0.00E+00	0.00E+00	0.00E+00	0.00E+00	0.00E+00	0.00E+00	0.00E+00
Tc-99m	0.00E+00	0.00E+00	0.00E+00	0.00E+00	0.00E+00	0.00E+00	0.00E+00

REMP DOSE FACTORS FOR ADULT AGE GROUP: MEAT SAMPLE (Page 2 of 2)

mrem-kg/pCi-yr

NUCLIDE	BONE	LIVER	T.BODY	THYROID	KIDNEY	LUNG	GI-LLI
Tc-101	0.00E+00	0.00E+00	0.00E+00	0.00E+00	0.00E+00	0.00E+00	0.00E+00
Ru-103	1.43E-05	0.00E+00	6.16E-06	0.00E+00	5.46E-05	0.00E+00	1.67E-03
Ru-105	0.00E+00	0.00E+00	0.00E+00	0.00E+00	0.00E+00	0.00E+00	0.00E+00
Ru-106	2.91E-04	0.00E+00	3.69E-05	0.00E+00	5.63E-04	0.00E+00	1.89E-02
Ag-110m	1.67E-05	1.54E-05	9.15E-06	0.00E+00	3.03E-05	0.00E+00	6.29E-03
Te-125m	2.32E-04	8.41E-05	3.11E-05	6.98E-05	9.44E-04	0.00E+00	9.27E-04
Te-127m	6.56E-04	2.34E-04	7.99E-05	1.68E-04	2.66E-03	0.00E+00	2.20E-03
Te-127	0.00E+00	0.00E+00	0.00E+00	0.00E+00	0.00E+00	0.00E+00	0.00E+00
Te-129m	8.87E-04	3.12E-04	1.33E-04	2.88E-04	3.50E-03	0.00E+00	4.22E-03
Te-129	2.29E-06	8.59E-07	5.57E-07	1.75E-06	9.61E-06	0.00E+00	1.73E-06
Te-131m	0.00E+00	0.00E+00	0.00E+00	0.00E+00	0.00E+00	0.00E+00	0.00E+00
Te-131	0.00E+00	0.00E+00	0.00E+00	0.00E+00	0.00E+00	0.00E+00	0.00E+00
Te-132	0.00E+00	0.00E+00	0.00E+00	0.00E+00	0.00E+00	0.00E+00	0.00E+00
I-130	0.00E+00	0.00E+00	0.00E+00	0.00E+00	0.00E+00	0.00E+00	0.00E+00
I-131	8.16E-05	1.17E-04	6.69E-05	3.82E-02	2.00E-04	0.00E+00	3.08E-05
I-132	0.00E+00	0.00E+00	0.00E+00	0.00E+00	0.00E+00	0.00E+00	0.00E+00
I-133	0.00E+00	0.00E+00	0.00E+00	0.00E+00	0.00E+00	0.00E+00	0.00E+00
I-134	0.00E+00	0.00E+00	0.00E+00	0.00E+00	0.00E+00	0.00E+00	0.00E+00
I-135	0.00E+00	0.00E+00	0.00E+00	0.00E+00	0.00E+00	0.00E+00	0.00E+00
Cs-134	6.72E-03	1.60E-02	1.31E-02	0.00E+00	5.17E-03	1.72E-03	2.80E-04
Cs-136	2.50E-04	9.86E-04	7.10E-04	0.00E+00	5.49E-04	7.52E-05	1.12E-04
Cs-137	8.76E-03	1.20E-02	7.84E-03	0.00E+00	4.06E-03	1.35E-03	2.32E-04
Cs-138	0.00E+00	0.00E+00	0.00E+00	0.00E+00	0.00E+00	0.00E+00	0.00E+00
Ba-139	0.00E+00	0.00E+00	0.00E+00	0.00E+00	0.00E+00	0.00E+00	0.00E+00
Ba-140	7.55E-04	9.49E-07	4.95E-05	0.00E+00	3.23E-07	5.43E-07	1.56E-03
Ba-141	0.00E+00	0.00E+00	0.00E+00	0.00E+00	0.00E+00	0.00E+00	0.00E+00
Ba-142	0.00E+00	0.00E+00	0.00E+00	0.00E+00	0.00E+00	0.00E+00	0.00E+00
La-140	0.00E+00	0.00E+00	0.00E+00	0.00E+00	0.00E+00	0.00E+00	0.00E+00
La-142	0.00E+00	0.00E+00	0.00E+00	0.00E+00	0.00E+00	0.00E+00	0.00E+00
Ce-141	6.72E-07	4.55E-07	5.16E-08	0.00E+00	2.11E-07	0.00E+00	1.74E-03
Ce-143	0.00E+00	0.00E+00	0.00E+00	0.00E+00	0.00E+00	0.00E+00	0.00E+00
Ce-144	5.11E-05	2.14E-05	2.74E-06	0.00E+00	1.27E-05	0.00E+00	1.73E-02
Pr-143	3.64E-07	1.46E-07	1.80E-08	0.00E+00	8.43E-08	0.00E+00	1.59E-03
Pr-144	0.00E+00	0.00E+00	0.00E+00	0.00E+00	0.00E+00	0.00E+00	0.00E+00
Nd-147	1.96E-07	2.26E-07	1.35E-08	0.00E+00	1.32E-07	0.00E+00	1.09E-03
W-187	0.00E+00	0.00E+00	0.00E+00	0.00E+00	0.00E+00	0.00E+00	0.00E+00
Np-239	0.00E+00	0.00E+00	0.00E+00	0.00E+00	0.00E+00	0.00E+00	0.00E+00

REMP DOSE FACTORS FOR ADULT AGE GROUP: FISH SAMPLE (Page 1 of 2)

mrem-kg/pCi-yr

NUCLIDE	BONE	LIVER	T.BODY	THYROID	KIDNEY	LUNG	GI-LLI
H-3	0.00E+00	2.20E-06	2.20E-06	2.20E-06	2.20E-06	2.20E-06	2.20E-06
C-14	5.96E-05	1.19E-05	1.19E-05	1.19E-05	1.19E-05	1.19E-05	1.19E-05
Na-24	1.18E-05	1.18E-05	1.18E-05	1.18E-05	1.18E-05	1.18E-05	1.18E-05
P-32	3.86E-03	2.40E-04	1.49E-04	0.00E+00	0.00E+00	0.00E+00	4.34E-04
Cr-51	0.00E+00	0.00E+00	5.45E-08	3.26E-08	1.20E-08	7.23E-08	1.37E-05
Mn-54	0.00E+00	9.58E-05	1.83E-05	0.00E+00	2.85E-05	0.00E+00	2.93E-04
Mn-56	0.00E+00	3.81E-09	6.76E-10	0.00E+00	4.84E-09	0.00E+00	1.22E-07
Fe-55	5.77E-05	3.99E-05	9.30E-06	0.00E+00	0.00E+00	2.22E-05	2.29E-05
Fe-59	8.97E-05	2.11E-04	8.08E-05	0.00E+00	0.00E+00	5.89E-05	7.03E-04
Co-58	0.00E+00	1.55E-05	3.47E-05	0.00E+00	0.00E+00	0.00E+00	3.14E-04
Co-60	0.00E+00	4.49E-05	9.91E-05	0.00E+00	0.00E+00	0.00E+00	8.44E-04
Ni-63	2.73E-03	1.89E-04	9.16E-05	0.00E+00	0.00E+00	0.00E+00	3.95E-05
Ni-65	1.51E-08	1.96E-09	8.93E-10	0.00E+00	0.00E+00	0.00E+00	4.96E-08
Cu-64	0.00E+00	4.72E-07	2.22E-07	0.00E+00	1.19E-06	0.00E+00	4.02E-05
Zn-65	1.01E-04	3.22E-04	1.46E-04	0.00E+00	2.16E-04	0.00E+00	2.03E-04
Zn-69	3.58E-15	6.85E-15	4.76E-16	0.00E+00	4.45E-15	0.00E+00	1.03E-15
Br-83	0.00E+00	0.00E+00	8.01E-10	0.00E+00	0.00E+00	0.00E+00	1.15E-09
Br-84	0.00E+00	0.00E+00	2.72E-20	0.00E+00	0.00E+00	0.00E+00	0.00E+00
Br-85	0.00E+00	0.00E+00	0.00E+00	0.00E+00	0.00E+00	0.00E+00	0.00E+00
Rb-86	0.00E+00	4.27E-04	1.99E-04	0.00E+00	0.00E+00	0.00E+00	8.42E-05
Rb-88	0.00E+00	0.00E+00	0.00E+00	0.00E+00	0.00E+00	0.00E+00	0.00E+00
Rb-89	0.00E+00	0.00E+00	0.00E+00	0.00E+00	0.00E+00	0.00E+00	0.00E+00
Sr-89	6.38E-03	0.00E+00	1.83E-04	0.00E+00	0.00E+00	0.00E+00	1.02E-03
Sr-90	1.59E-01	0.00E+00	3.91E-02	0.00E+00	0.00E+00	0.00E+00	4.60E-03
Sr-91	2.07E-05	0.00E+00	8.35E-07	0.00E+00	0.00E+00	0.00E+00	9.84E-05
Sr-92	9.74E-08	0.00E+00	4.21E-09	0.00E+00	0.00E+00	0.00E+00	1.93E-06
Y-90	1.56E-07	0.00E+00	4.18E-09	0.00E+00	0.00E+00	0.00E+00	1.65E-03
Y-91m	3.78E-18	0.00E+00	1.47E-19	0.00E+00	0.00E+00	0.00E+00	1.11E-17
Y-91	2.93E-06	0.00E+00	7.82E-08	0.00E+00	0.00E+00	0.00E+00	1.61E-03
Y-92	1.62E-10	0.00E+00	4.72E-12	0.00E+00	0.00E+00	0.00E+00	2.83E-06
Y-93	1.08E-08	0.00E+00	2.99E-10	0.00E+00	0.00E+00	0.00E+00	3.44E-04
Zr-95	6.32E-07	2.03E-07	1.37E-07	0.00E+00	3.18E-07	0.00E+00	6.42E-04
Zr-97	1.32E-08	2.66E-09	1.22E-09	0.00E+00	4.02E-09	0.00E+00	8.24E-04
Nb-95	1.28E-07	7.12E-08	3.83E-08	0.00E+00	7.04E-08	0.00E+00	4.32E-04
Mo-99	0.00E+00	7.04E-05	1.34E-05	0.00E+00	1.59E-04	0.00E+00	1.63E-04
Tc-99m	3.27E-10	9.25E-10	1.18E-08	0.00E+00	1.40E-08	4.53E-10	5.47E-07

REMP DOSE FACTORS FOR ADULT AGE GROUP: FISH SAMPLE (Page 2 of 2)

mrem-kg/pCi-yr

NUCLIDE	BONE	LIVER	T.BODY	THYROID	KIDNEY	LUNG	GI-LLI
Tc-101	0.00E+00	0.00E+00	0.00E+00	0.00E+00	0.00E+00	0.00E+00	0.00E+00
Ru-103	3.82E-06	0.00E+00	1.64E-06	0.00E+00	1.46E-05	0.00E+00	4.46E-04
Ru-105	7.63E-09	0.00E+00	3.01E-09	0.00E+00	9.86E-08	0.00E+00	4.67E-06
Ru-106	5.76E-05	0.00E+00	7.29E-06	0.00E+00	1.11E-04	0.00E+00	3.73E-03
Ag-110m	3.35E-06	3.10E-06	1.84E-06	0.00E+00	6.09E-06	0.00E+00	1.26E-03
Te-125m	5.56E-05	2.01E-05	7.45E-06	1.67E-05	2.26E-04	0.00E+00	2.22E-04
Te-127m	1.41E-04	5.05E-05	1.72E-05	3.61E-05	5.74E-04	0.00E+00	4.74E-04
Te-127	3.90E-07	1.40E-07	8.44E-08	2.89E-07	1.59E-06	0.00E+00	3.08E-05
Te-129m	2.37E-04	8.83E-05	3.74E-05	8.13E-05	9.87E-04	0.00E+00	1.19E-03
Te-129	6.46E-07	2.43E-07	1.57E-07	4.96E-07	2.72E-06	0.00E+00	4.88E-07
Te-131m	2.09E-05	1.02E-05	8.50E-06	1.62E-05	1.03E-04	0.00E+00	1.01E-03
Te-131	2.05E-24	0.00E+00	0.00E+00	1.69E-24	8.98E-24	0.00E+00	0.00E+00
Te-132	4.28E-05	2.77E-05	2.60E-05	3.06E-05	2.67E-04	0.00E+00	1.31E-03
I-130	4.13E-06	1.22E-05	4.81E-06	1.03E-03	1.90E-05	0.00E+00	1.05E-05
I-131	8.01E-05	1.15E-04	6.57E-05	3.76E-02	1.97E-04	0.00E+00	3.02E-05
I-132	3.08E-09	8.24E-09	2.88E-09	2.88E-07	1.31E-08	0.00E+00	1.55E-09
I-133	1.34E-05	2.33E-05	7.11E-06	3.43E-03	4.07E-05	0.00E+00	2.10E-05
I-134	1.33E-14	3.61E-14	1.29E-14	6.25E-13	5.73E-14	0.00E+00	3.14E-17
I-135	7.51E-07	1.97E-06	7.26E-07	1.30E-04	3.15E-06	0.00E+00	2.22E-06
Cs-134	1.30E-03	3.11E-03	2.54E-03	0.00E+00	1.00E-03	3.34E-04	5.43E-05
Cs-136	1.30E-04	5.12E-04	3.69E-04	0.00E+00	2.85E-04	3.90E-05	5.82E-05
Cs-137	1.67E-03	2.29E-03	1.50E-03	0.00E+00	7.77E-04	2.58E-04	4.43E-05
Cs-138	4.25E-20	8.40E-20	4.16E-20	0.00E+00	6.17E-20	6.10E-21	0.00E+00
Ba-139	1.27E-11	9.03E-15	3.71E-13	0.00E+00	8.44E-15	5.12E-15	2.25E-11
Ba-140	4.04E-04	5.07E-07	2.65E-05	0.00E+00	1.72E-07	2.90E-07	8.31E-04
Ba-141	0.00E+00	0.00E+00	0.00E+00	0.00E+00	0.00E+00	0.00E+00	0.00E+00
Ba-142	0.00E+00	0.00E+00	0.00E+00	0.00E+00	0.00E+00	0.00E+00	0.00E+00
La-140	3.47E-08	1.75E-08	4.62E-09	0.00E+00	0.00E+00	0.00E+00	1.28E-03
La-142	7.85E-14	3.57E-14	8.89E-15	0.00E+00	0.00E+00	0.00E+00	2.61E-10
Ce-141	1.92E-07	1.30E-07	1.48E-08	0.00E+00	6.04E-08	0.00E+00	4.97E-04
Ce-143	2.09E-08	1.55E-05	1.71E-09	0.00E+00	6.81E-09	0.00E+00	5.78E-04
Ce-144	1.02E-05	4.27E-06	5.49E-07	0.00E+00	2.53E-06	0.00E+00	3.46E-03
Pr-143	1.84E-07	7.36E-08	9.10E-09	0.00E+00	4.25E-08	0.00E+00	8.04E-04
Pr-144	0.00E+00	0.00E+00	0.00E+00	0.00E+00	0.00E+00	0.00E+00	0.00E+00
Nd-147	1.24E-07	1.43E-07	8.58E-09	0.00E+00	8.38E-08	0.00E+00	6.88E-04
W-187	1.08E-06	9.00E-07	3.14E-07	0.00E+00	0.00E+00	0.00E+00	2.95E-04
Np-239	1.86E-08	1.83E-09	1.01E-09	0.00E+00	5.71E-09	0.00E+00	3.75E-04

REMP DOSE FACTORS FOR ADULT AGE GROUP: DRINKING WATER (Page 1 of 2)

mrem-liter/pCi-yr

NUCLIDE	BONE	LIVER	T.BODY	THYROID	KIDNEY	LUNG	GI-LLI
H-3	0.00E+00	7.66E-05	7.66E-05	7.66E-05	7.66E-05	7.66E-05	7.66E-05
C-14	2.07E-03	4.15E-04	4.15E-04	4.15E-04	4.15E-04	4.15E-04	4.15E-04
Na-24	7.13E-04	7.13E-04	7.13E-04	7.13E-04	7.13E-04	7.13E-04	7.13E-04
P-32	1.38E-01	8.55E-03	5.32E-03	0.00E+00	0.00E+00	0.00E+00	1.55E-02
Cr-51	0.00E+00	0.00E+00	1.92E-06	1.15E-06	4.22E-07	2.54E-06	4.82E-04
Mn-54	0.00E+00	3.33E-03	6.36E-04	0.00E+00	9.92E-04	0.00E+00	1.02E-02
Mn-56	0.00E+00	3.33E-06	5.92E-07	0.00E+00	4.23E-06	0.00E+00	1.06E-04
Fe-55	2.01E-03	1.39E-03	3.23E-04	0.00E+00	0.00E+00	7.74E-04	7.95E-04
Fe-59	3.14E-03	7.39E-03	2.83E-03	0.00E+00	0.00E+00	2.06E-03	2.46E-02
Co-58	0.00E+00	5.41E-04	1.21E-03	0.00E+00	0.00E+00	0.00E+00	1.10E-02
Co-60	0.00E+00	1.56E-03	3.44E-03	0.00E+00	0.00E+00	0.00E+00	2.93E-02
Ni-63	9.49E-02	6.58E-03	3.18E-03	0.00E+00	0.00E+00	0.00E+00	1.37E-03
Ni-65	1.42E-05	1.85E-06	8.42E-07	0.00E+00	0.00E+00	0.00E+00	4.68E-05
Cu-64	0.00E+00	3.16E-05	1.48E-05	0.00E+00	7.96E-05	0.00E+00	2.69E-03
Zn-65	3.53E-03	1.12E-02	5.07E-03	0.00E+00	7.51E-03	0.00E+00	7.07E-03
Zn-69	9.68E-10	1.85E-09	1.29E-10	0.00E+00	1.20E-09	0.00E+00	2.78E-10
Br-83	0.00E+00	0.00E+00	9.04E-07	0.00E+00	0.00E+00	0.00E+00	1.30E-06
Br-84	0.00E+00	0.00E+00	6.00E-12	0.00E+00	0.00E+00	0.00E+00	4.71E-17
Br-85	0.00E+00	0.00E+00	0.00E+00	0.00E+00	0.00E+00	0.00E+00	0.00E+00
Rb-86	0.00E+00	1.51E-02	7.04E-03	0.00E+00	0.00E+00	0.00E+00	2.98E-03
Rb-88	0.00E+00	3.11E-17	1.65E-17	0.00E+00	0.00E+00	0.00E+00	0.00E+00
Rb-89	0.00E+00	2.86E-19	2.01E-19	0.00E+00	0.00E+00	0.00E+00	0.00E+00
Sr-89	2.23E-01	0.00E+00	6.41E-03	0.00E+00	0.00E+00	0.00E+00	3.58E-02
Sr-90	5.53E+00	0.00E+00	1.36E+00	0.00E+00	0.00E+00	0.00E+00	1.60E-01
Sr-91	1.72E-03	0.00E+00	6.96E-05	0.00E+00	0.00E+00	0.00E+00	8.21E-03
Sr-92	7.29E-05	0.00E+00	3.15E-06	0.00E+00	0.00E+00	0.00E+00	1.44E-03
Y-90	6.17E-06	0.00E+00	1.65E-07	0.00E+00	0.00E+00	0.00E+00	6.54E-02
Y-91m	2.95E-12	0.00E+00	1.14E-13	0.00E+00	0.00E+00	0.00E+00	8.68E-12
Y-91	1.02E-04	0.00E+00	2.74E-06	0.00E+00	0.00E+00	0.00E+00	5.63E-02
Y-92	5.88E-08	0.00E+00	1.72E-09	0.00E+00	0.00E+00	0.00E+00	1.03E-03
Y-93	8.59E-07	0.00E+00	2.37E-08	0.00E+00	0.00E+00	0.00E+00	2.72E-02
Zr-95	2.21E-05	7.08E-06	4.79E-06	0.00E+00	1.11E-05	0.00E+00	2.24E-02
Zr-97	7.50E-07	1.51E-07	6.92E-08	0.00E+00	2.28E-07	0.00E+00	4.69E-02
Nb-95	4.50E-06	2.50E-06	1.34E-06	0.00E+00	2.47E-06	0.00E+00	1.52E-02
Mo-99	0.00E+00	2.77E-03	5.28E-04	0.00E+00	6.28E-03	0.00E+00	6.43E-03
Tc-99m	4.53E-08	1.28E-07	1.63E-06	0.00E+00	1.94E-06	6.27E-08	7.57E-05

REMP DOSE FACTORS FOR ADULT AGE GROUP: DRINKING WATER (Page 2 of 2)
mrem-liter/pCi-yr

NUCLIDE	BONE	LIVER	T.BODY	THYROID	KIDNEY	LUNG	GI-LLI
Tc-101	1.08E-22	1.56E-22	1.53E-21	0.00E+00	2.81E-21	7.98E-23	0.00E+00
Ru-103	1.34E-04	0.00E+00	5.77E-05	0.00E+00	5.11E-04	0.00E+00	1.56E-02
Ru-105	1.73E-06	0.00E+00	6.82E-07	0.00E+00	2.23E-05	0.00E+00	1.06E-03
Ru-106	2.01E-03	0.00E+00	2.54E-04	0.00E+00	3.87E-03	0.00E+00	1.30E-01
Ag-110m	1.17E-04	1.08E-04	6.41E-05	0.00E+00	2.12E-04	0.00E+00	4.40E-02
Te-125m	1.94E-03	7.05E-04	2.61E-04	5.85E-04	7.91E-03	0.00E+00	7.76E-03
Te-127m	4.93E-03	1.76E-03	6.00E-04	1.26E-03	2.00E-02	0.00E+00	1.65E-02
Te-127	3.30E-05	1.18E-05	7.14E-06	2.44E-05	1.34E-04	0.00E+00	2.60E-03
Te-129m	8.31E-03	3.10E-03	1.31E-03	2.85E-03	3.47E-02	0.00E+00	4.18E-02
Te-129	2.27E-05	8.53E-06	5.53E-06	1.74E-05	9.54E-05	0.00E+00	1.71E-05
Te-131m	9.57E-04	4.68E-04	3.90E-04	7.41E-04	4.74E-03	0.00E+00	4.65E-02
Te-131	3.20E-14	1.34E-14	1.01E-14	2.63E-14	1.40E-13	0.00E+00	4.53E-15
Te-132	1.65E-03	1.07E-03	1.00E-03	1.18E-03	1.03E-02	0.00E+00	5.06E-02
I-130	2.82E-04	8.31E-04	3.28E-04	7.04E-02	1.30E-03	0.00E+00	7.15E-04
I-131	2.91E-03	4.16E-03	2.38E-03	1.36E+00	7.13E-03	0.00E+00	1.10E-03
I-132	3.98E-06	1.07E-05	3.73E-06	3.73E-04	1.70E-05	0.00E+00	2.00E-06
I-133	6.95E-04	1.21E-03	3.69E-04	1.78E-01	2.11E-03	0.00E+00	1.09E-03
I-134	5.97E-09	1.62E-08	5.81E-09	2.81E-07	2.58E-08	0.00E+00	1.41E-11
I-135	9.19E-05	2.41E-04	8.88E-05	1.59E-02	3.86E-04	0.00E+00	2.72E-04
Cs-134	4.54E-02	1.08E-01	8.83E-02	0.00E+00	3.50E-02	1.16E-02	1.89E-03
Cs-136	4.63E-03	1.83E-02	1.32E-02	0.00E+00	1.02E-02	1.39E-03	2.08E-03
Cs-137	5.82E-02	7.96E-02	5.21E-02	0.00E+00	2.70E-02	8.98E-03	1.54E-03
Cs-138	7.72E-12	1.52E-11	7.55E-12	0.00E+00	1.12E-11	1.11E-12	6.50E-17
Ba-139	1.77E-07	1.26E-10	5.17E-09	0.00E+00	1.18E-10	7.14E-11	3.13E-07
Ba-140	1.44E-02	1.81E-05	9.45E-04	0.00E+00	6.16E-06	1.04E-05	2.97E-02
Ba-141	4.97E-17	3.76E-20	1.68E-18	0.00E+00	3.50E-20	2.13E-20	0.00E+00
Ba-142	0.00E+00	0.00E+00	0.00E+00	0.00E+00	0.00E+00	0.00E+00	0.00E+00
La-140	1.48E-06	7.48E-07	1.98E-07	0.00E+00	0.00E+00	0.00E+00	5.49E-02
La-142	5.05E-10	2.30E-10	5.72E-11	0.00E+00	0.00E+00	0.00E+00	1.68E-06
Ce-141	6.76E-06	4.57E-06	5.19E-07	0.00E+00	2.12E-06	0.00E+00	1.75E-02
Ce-143	9.36E-07	6.92E-04	7.66E-08	0.00E+00	3.05E-07	0.00E+00	2.59E-02
Ce-144	3.56E-04	1.49E-04	1.91E-05	0.00E+00	8.82E-05	0.00E+00	1.20E-01
Pr-143	6.55E-06	2.63E-06	3.24E-07	0.00E+00	1.52E-06	0.00E+00	2.87E-02
Pr-144	6.67E-21	2.77E-21	3.39E-22	0.00E+00	1.56E-21	0.00E+00	0.00E+00
Nd-147	4.45E-06	5.14E-06	3.08E-07	0.00E+00	3.01E-06	0.00E+00	2.47E-02
W-187	5.30E-05	4.43E-05	1.55E-05	0.00E+00	0.00E+00	0.00E+00	1.45E-02
Np-239	7.50E-07	7.37E-08	4.06E-08	0.00E+00	2.30E-07	0.00E+00	1.51E-02

REMP DOSE FACTORS FOR ADULT AGE GROUP: INHALATION - QUARTERLY SAMPLING (Page 1 of 2)

mrem-m^3/pCi-yr

NUCLIDE	BONE	LIVER	T.BODY	THYROID	KIDNEY	LUNG	GI-LLI
H-3	0.00E+00	1.27E-03	1.27E-03	1.27E-03	1.27E-03	1.27E-03	1.27E-03
C-14	1.82E-02	3.41E-03	3.41E-03	3.41E-03	3.41E-03	3.41E-03	3.41E-03
Na-24	0.00E+00	0.00E+00	0.00E+00	0.00E+00	0.00E+00	0.00E+00	0.00E+00
P-32	1.21E+01	7.05E-01	4.58E-01	0.00E+00	0.00E+00	0.00E+00	7.90E-01
Cr-51	0.00E+00	0.00E+00	3.13E-04	1.86E-04	7.14E-05	4.51E-02	1.04E-02
Mn-54	0.00E+00	4.38E-02	6.97E-03	0.00E+00	1.09E-02	1.55E+00	8.56E-02
Mn-56	0.00E+00	0.00E+00	0.00E+00	0.00E+00	0.00E+00	0.00E+00	0.00E+00
Fe-55	2.54E-02	1.75E-02	4.07E-03	0.00E+00	0.00E+00	7.44E-02	6.23E-03
Fe-59	2.39E-02	5.64E-02	2.14E-02	0.00E+00	0.00E+00	2.06E+00	3.82E-01
Co-58	0.00E+00	2.48E-03	3.24E-03	0.00E+00	0.00E+00	1.45E+00	1.66E-01
Co-60	0.00E+00	1.17E-02	1.50E-02	0.00E+00	0.00E+00	6.07E+00	2.90E-01
Ni-63	4.32E-01	3.15E-02	1.45E-02	0.00E+00	0.00E+00	1.79E-01	1.34E-02
Ni-65	0.00E+00	0.00E+00	0.00E+00	0.00E+00	0.00E+00	0.00E+00	0.00E+00
Cu-64	0.00E+00	0.00E+00	0.00E+00	0.00E+00	0.00E+00	0.00E+00	0.00E+00
Zn-65	3.69E-02	1.17E-01	5.30E-02	0.00E+00	7.85E-02	9.83E-01	6.08E-02
Zn-69	0.00E+00	0.00E+00	0.00E+00	0.00E+00	0.00E+00	0.00E+00	0.00E+00
Br-83	0.00E+00	0.00E+00	0.00E+00	0.00E+00	0.00E+00	0.00E+00	0.00E+00
Br-84	0.00E+00	0.00E+00	0.00E+00	0.00E+00	0.00E+00	0.00E+00	0.00E+00
Br-85	0.00E+00	0.00E+00	0.00E+00	0.00E+00	0.00E+00	0.00E+00	0.00E+00
Rb-86	0.00E+00	7.36E-01	3.21E-01	0.00E+00	0.00E+00	0.00E+00	9.06E-02
Rb-88	0.00E+00	0.00E+00	0.00E+00	0.00E+00	0.00E+00	0.00E+00	0.00E+00
Rb-89	0.00E+00	0.00E+00	0.00E+00	0.00E+00	0.00E+00	0.00E+00	0.00E+00
Sr-89	5.68E-01	0.00E+00	1.63E-02	0.00E+00	0.00E+00	2.62E+00	6.54E-01
Sr-90	9.95E+01	0.00E+00	6.11E+00	0.00E+00	0.00E+00	9.63E+00	7.24E-01
Sr-91	0.00E+00	0.00E+00	0.00E+00	0.00E+00	0.00E+00	0.00E+00	0.00E+00
Sr-92	0.00E+00	0.00E+00	0.00E+00	0.00E+00	0.00E+00	0.00E+00	0.00E+00
Y-90	0.00E+00	0.00E+00	0.00E+00	0.00E+00	0.00E+00	0.00E+00	0.00E+00
Y-91m	0.00E+00	0.00E+00	0.00E+00	0.00E+00	0.00E+00	0.00E+00	0.00E+00
Y-91	7.94E-01	0.00E+00	2.13E-02	0.00E+00	0.00E+00	2.93E+00	6.61E-01
Y-92	0.00E+00	0.00E+00	0.00E+00	0.00E+00	0.00E+00	0.00E+00	0.00E+00
Y-93	0.00E+00	0.00E+00	0.00E+00	0.00E+00	0.00E+00	0.00E+00	0.00E+00
Zr-95	1.76E-01	5.64E-02	3.82E-02	0.00E+00	8.88E-02	2.90E+00	2.46E-01
Zr-97	0.00E+00	0.00E+00	0.00E+00	0.00E+00	0.00E+00	0.00E+00	0.00E+00
Nb-95	3.47E-02	1.93E-02	1.04E-02	0.00E+00	1.91E-02	1.24E+00	2.56E-01
Mo-99	0.00E+00	0.00E+00	0.00E+00	0.00E+00	0.00E+00	0.00E+00	0.00E+00
Tc-99m	0.00E+00	0.00E+00	0.00E+00	0.00E+00	0.00E+00	0.00E+00	0.00E+00

REMP DOSE FACTORS FOR ADULT AGE GROUP: INHALATION - QUARTERLY SAMPLING (Page 2 of 2)
mrem-m^3/pCi-yr

NUCLIDE	BONE	LIVER	T.BODY	THYROID	KIDNEY	LUNG	GI-LLI
Tc-101	0.00E+00	0.00E+00	0.00E+00	0.00E+00	0.00E+00	0.00E+00	0.00E+00
Ru-103	3.41E-03	0.00E+00	1.47E-03	0.00E+00	1.30E-02	1.13E+00	2.47E-01
Ru-105	0.00E+00	0.00E+00	0.00E+00	0.00E+00	0.00E+00	0.00E+00	0.00E+00
Ru-106	7.53E-02	0.00E+00	9.50E-03	0.00E+00	1.46E-01	1.02E+01	9.94E-01
Ag-110m	1.23E-02	1.13E-02	6.75E-03	0.00E+00	2.23E-02	5.26E+00	3.43E-01
Te-125m	5.89E-03	2.73E-03	8.06E-04	1.81E-03	2.14E-02	5.41E-01	1.22E-01
Te-127m	1.69E-02	7.71E-03	2.10E-03	4.39E-03	6.12E-02	1.28E+00	2.00E-01
Te-127	0.00E+00	0.00E+00	0.00E+00	0.00E+00	0.00E+00	0.00E+00	0.00E+00
Te-129m	2.50E-02	1.20E-02	4.06E-03	8.82E-03	9.37E-02	2.97E+00	9.82E-01
Te-129	1.28E-07	6.13E-08	3.18E-08	9.99E-08	4.80E-07	4.96E-03	4.02E-04
Te-131m	0.00E+00	0.00E+00	0.00E+00	0.00E+00	0.00E+00	0.00E+00	0.00E+00
Te-131	0.00E+00	0.00E+00	0.00E+00	0.00E+00	0.00E+00	0.00E+00	0.00E+00
Te-132	0.00E+00	0.00E+00	0.00E+00	0.00E+00	0.00E+00	0.00E+00	0.00E+00
I-130	0.00E+00	0.00E+00	0.00E+00	0.00E+00	0.00E+00	0.00E+00	0.00E+00
I-131	1.29E+00	1.83E+00	1.05E+00	6.09E+02	3.13E+00	0.00E+00	3.21E-01
I-132	0.00E+00	0.00E+00	0.00E+00	0.00E+00	0.00E+00	0.00E+00	0.00E+00
I-133	0.00E+00	0.00E+00	0.00E+00	0.00E+00	0.00E+00	0.00E+00	0.00E+00
I-134	0.00E+00	0.00E+00	0.00E+00	0.00E+00	0.00E+00	0.00E+00	0.00E+00
I-135	0.00E+00	0.00E+00	0.00E+00	0.00E+00	0.00E+00	0.00E+00	0.00E+00
Cs-134	3.89E-01	8.84E-01	7.59E-01	0.00E+00	3.00E-01	1.02E-01	1.08E-02
Cs-136	4.32E-01	1.62E+00	1.22E+00	0.00E+00	9.47E-01	1.33E-01	1.29E-01
Cs-137	4.80E-01	6.23E-01	4.29E-01	0.00E+00	2.23E-01	7.54E-02	8.42E-03
Cs-138	0.00E+00	0.00E+00	0.00E+00	0.00E+00	0.00E+00	0.00E+00	0.00E+00
Ba-139	0.00E+00	0.00E+00	0.00E+00	0.00E+00	0.00E+00	0.00E+00	0.00E+00
Ba-140	4.63E-01	5.81E-04	3.04E-02	0.00E+00	1.98E-04	1.51E+01	2.59E+00
Ba-141	0.00E+00	0.00E+00	0.00E+00	0.00E+00	0.00E+00	0.00E+00	0.00E+00
Ba-142	0.00E+00	0.00E+00	0.00E+00	0.00E+00	0.00E+00	0.00E+00	0.00E+00
La-140	0.00E+00	0.00E+00	0.00E+00	0.00E+00	0.00E+00	0.00E+00	0.00E+00
La-142	0.00E+00	0.00E+00	0.00E+00	0.00E+00	0.00E+00	0.00E+00	0.00E+00
Ce-141	5.27E-02	3.58E-02	4.04E-03	0.00E+00	1.66E-02	9.57E-01	3.18E-01
Ce-143	0.00E+00	0.00E+00	0.00E+00	0.00E+00	0.00E+00	0.00E+00	0.00E+00
Ce-144	3.84E+00	1.60E+00	2.06E-01	0.00E+00	9.48E-01	8.69E+00	9.12E-01
Pr-143	9.64E-02	3.86E-02	4.78E-03	0.00E+00	2.22E-02	2.89E+00	2.06E+00
Pr-144	0.00E+00	0.00E+00	0.00E+00	0.00E+00	0.00E+00	0.00E+00	0.00E+00
Nd-147	9.39E-02	1.09E-01	6.50E-03	0.00E+00	6.34E-02	3.93E+00	3.08E+00
W-187	0.00E+00	0.00E+00	0.00E+00	0.00E+00	0.00E+00	0.00E+00	0.00E+00
Np-239	0.00E+00	0.00E+00	0.00E+00	0.00E+00	0.00E+00	0.00E+00	0.00E+00

REMP DOSE FACTORS FOR ADULT AGE GROUP: INHALATION - WEEKLY SAMPLING (Page 1 of 2)
mrem-m^3/pCi-yr

NUCLIDE	BONE	LIVER	T.BODY	THYROID	KIDNEY	LUNG	GI-LLI
H-3	0.00E+00	1.26E-03	1.26E-03	1.26E-03	1.26E-03	1.26E-03	1.26E-03
C-14	1.82E-02	3.41E-03	3.41E-03	3.41E-03	3.41E-03	3.41E-03	3.41E-03
Na-24	0.00E+00	0.00E+00	0.00E+00	0.00E+00	0.00E+00	0.00E+00	0.00E+00
P-32	1.56E+00	9.14E-02	5.93E-02	0.00E+00	0.00E+00	0.00E+00	1.02E-01
Cr-51	0.00E+00	0.00E+00	1.09E-04	6.50E-05	2.49E-05	1.57E-02	3.62E-03
Mn-54	0.00E+00	3.99E-02	6.35E-03	0.00E+00	9.92E-03	1.41E+00	7.80E-02
Mn-56	0.00E+00	0.00E+00	0.00E+00	0.00E+00	0.00E+00	0.00E+00	0.00E+00
Fe-55	2.46E-02	1.70E-02	3.95E-03	0.00E+00	0.00E+00	7.23E-02	6.05E-03
Fe-59	1.24E-02	2.93E-02	1.11E-02	0.00E+00	0.00E+00	1.07E+00	1.99E-01
Co-58	0.00E+00	1.64E-03	2.14E-03	0.00E+00	0.00E+00	9.60E-01	1.10E-01
Co-60	0.00E+00	1.15E-02	1.48E-02	0.00E+00	0.00E+00	5.98E+00	2.85E-01
Ni-63	4.32E-01	3.14E-02	1.45E-02	0.00E+00	0.00E+00	1.78E-01	1.34E-02
Ni-65	0.00E+00	0.00E+00	0.00E+00	0.00E+00	0.00E+00	0.00E+00	0.00E+00
Cu-64	0.00E+00	0.00E+00	0.00E+00	0.00E+00	0.00E+00	0.00E+00	0.00E+00
Zn-65	3.27E-02	1.04E-01	4.70E-02	0.00E+00	6.96E-02	8.73E-01	5.40E-02
Zn-69	0.00E+00	0.00E+00	0.00E+00	0.00E+00	0.00E+00	0.00E+00	0.00E+00
Br-83	0.00E+00	0.00E+00	0.00E+00	0.00E+00	0.00E+00	0.00E+00	0.00E+00
Br-84	0.00E+00	0.00E+00	0.00E+00	0.00E+00	0.00E+00	0.00E+00	0.00E+00
Br-85	0.00E+00	0.00E+00	0.00E+00	0.00E+00	0.00E+00	0.00E+00	0.00E+00
Rb-86	0.00E+00	1.54E-01	6.71E-02	0.00E+00	0.00E+00	0.00E+00	1.90E-02
Rb-88	0.00E+00	0.00E+00	0.00E+00	0.00E+00	0.00E+00	0.00E+00	0.00E+00
Rb-89	0.00E+00	0.00E+00	0.00E+00	0.00E+00	0.00E+00	0.00E+00	0.00E+00
Sr-89	3.19E-01	0.00E+00	9.15E-03	0.00E+00	0.00E+00	1.47E+00	3.67E-01
Sr-90	9.92E+01	0.00E+00	6.10E+00	0.00E+00	0.00E+00	9.60E+00	7.22E-01
Sr-91	0.00E+00	0.00E+00	0.00E+00	0.00E+00	0.00E+00	0.00E+00	0.00E+00
Sr-92	0.00E+00	0.00E+00	0.00E+00	0.00E+00	0.00E+00	0.00E+00	0.00E+00
Y-90	0.00E+00	0.00E+00	0.00E+00	0.00E+00	0.00E+00	0.00E+00	0.00E+00
Y-91m	0.00E+00	0.00E+00	0.00E+00	0.00E+00	0.00E+00	0.00E+00	0.00E+00
Y-91	4.82E-01	0.00E+00	1.29E-02	0.00E+00	0.00E+00	1.78E+00	4.01E-01
Y-92	0.00E+00	0.00E+00	0.00E+00	0.00E+00	0.00E+00	0.00E+00	0.00E+00
Y-93	0.00E+00	0.00E+00	0.00E+00	0.00E+00	0.00E+00	0.00E+00	0.00E+00
Zr-95	1.11E-01	3.57E-02	2.42E-02	0.00E+00	5.63E-02	1.84E+00	1.56E-01
Zr-97	0.00E+00	0.00E+00	0.00E+00	0.00E+00	0.00E+00	0.00E+00	0.00E+00
Nb-95	1.51E-02	8.38E-03	4.51E-03	0.00E+00	8.29E-03	5.41E-01	1.11E-01
Mo-99	0.00E+00	0.00E+00	0.00E+00	0.00E+00	0.00E+00	0.00E+00	0.00E+00
Tc-99m	0.00E+00	0.00E+00	0.00E+00	0.00E+00	0.00E+00	0.00E+00	0.00E+00

REMP DOSE FACTORS FOR ADULT AGE GROUP: INHALATION - WEEKLY SAMPLING (Page 2 of 2)

mrem-m³/pCi-yr

NUCLIDE	BONE	LIVER	T.BODY	THYROID	KIDNEY	LUNG	GI-LLI
Tc-101	0.00E+00	0.00E+00	0.00E+00	0.00E+00	0.00E+00	0.00E+00	0.00E+00
Ru-103	1.63E-03	0.00E+00	7.00E-04	0.00E+00	6.20E-03	5.37E-01	1.17E-01
Ru-105	0.00E+00	0.00E+00	0.00E+00	0.00E+00	0.00E+00	0.00E+00	0.00E+00
Ru-106	6.96E-02	0.00E+00	8.78E-03	0.00E+00	1.34E-01	9.42E+00	9.18E-01
Ag-110m	1.09E-02	1.01E-02	6.00E-03	0.00E+00	1.99E-02	4.68E+00	3.05E-01
Te-125m	3.56E-03	1.65E-03	4.87E-04	1.09E-03	1.29E-02	3.27E-01	7.37E-02
Te-127m	1.29E-02	5.90E-03	1.60E-03	3.36E-03	4.68E-02	9.82E-01	1.53E-01
Te-127	0.00E+00	0.00E+00	0.00E+00	0.00E+00	0.00E+00	0.00E+00	0.00E+00
Te-129m	1.05E-02	5.02E-03	1.70E-03	3.70E-03	3.93E-02	1.25E+00	4.12E-01
Te-129	5.35E-08	2.57E-08	1.33E-08	4.19E-08	2.01E-07	2.08E-03	1.69E-04
Te-131m	0.00E+00	0.00E+00	0.00E+00	0.00E+00	0.00E+00	0.00E+00	0.00E+00
Te-131	0.00E+00	0.00E+00	0.00E+00	0.00E+00	0.00E+00	0.00E+00	0.00E+00
Te-132	0.00E+00	0.00E+00	0.00E+00	0.00E+00	0.00E+00	0.00E+00	0.00E+00
I-130	0.00E+00	0.00E+00	0.00E+00	0.00E+00	0.00E+00	0.00E+00	0.00E+00
I-131	2.52E-02	3.58E-02	2.05E-02	1.19E+01	6.13E-02	0.00E+00	6.28E-03
I-132	0.00E+00	0.00E+00	0.00E+00	0.00E+00	0.00E+00	0.00E+00	0.00E+00
I-133	0.00E+00	0.00E+00	0.00E+00	0.00E+00	0.00E+00	0.00E+00	0.00E+00
I-134	0.00E+00	0.00E+00	0.00E+00	0.00E+00	0.00E+00	0.00E+00	0.00E+00
I-135	0.00E+00	0.00E+00	0.00E+00	0.00E+00	0.00E+00	0.00E+00	0.00E+00
Cs-134	3.74E-01	8.51E-01	7.30E-01	0.00E+00	2.88E-01	9.79E-02	1.04E-02
Cs-136	4.69E-02	1.76E-01	1.33E-01	0.00E+00	1.03E-01	1.44E-02	1.40E-02
Cs-137	4.79E-01	6.21E-01	4.28E-01	0.00E+00	2.22E-01	7.52E-02	8.40E-03
Cs-138	0.00E+00	0.00E+00	0.00E+00	0.00E+00	0.00E+00	0.00E+00	0.00E+00
Ba-139	0.00E+00	0.00E+00	0.00E+00	0.00E+00	0.00E+00	0.00E+00	0.00E+00
Ba-140	4.72E-02	5.93E-05	3.10E-03	0.00E+00	2.02E-05	1.54E+00	2.64E-01
Ba-141	0.00E+00	0.00E+00	0.00E+00	0.00E+00	0.00E+00	0.00E+00	0.00E+00
Ba-142	0.00E+00	0.00E+00	0.00E+00	0.00E+00	0.00E+00	0.00E+00	0.00E+00
La-140	0.00E+00	0.00E+00	0.00E+00	0.00E+00	0.00E+00	0.00E+00	0.00E+00
La-142	0.00E+00	0.00E+00	0.00E+00	0.00E+00	0.00E+00	0.00E+00	0.00E+00
Ce-141	2.15E-02	1.46E-02	1.65E-03	0.00E+00	6.75E-03	3.90E-01	1.29E-01
Ce-143	0.00E+00	0.00E+00	0.00E+00	0.00E+00	0.00E+00	0.00E+00	0.00E+00
Ce-144	3.46E+00	1.44E+00	1.86E-01	0.00E+00	8.55E-01	7.84E+00	8.23E-01
Pr-143	1.12E-02	4.49E-03	5.55E-04	0.00E+00	2.58E-03	3.36E-01	2.39E-01
Pr-144	0.00E+00	0.00E+00	0.00E+00	0.00E+00	0.00E+00	0.00E+00	0.00E+00
Nd-147	6.58E-03	7.60E-03	4.55E-04	0.00E+00	4.44E-03	2.75E-01	2.16E-01
W-187	0.00E+00	0.00E+00	0.00E+00	0.00E+00	0.00E+00	0.00E+00	0.00E+00
Np-239	0.00E+00	0.00E+00	0.00E+00	0.00E+00	0.00E+00	0.00E+00	0.00E+00

REMP DOSE FACTORS FOR TEEN AGE GROUP: MILK (Page 1 of 2)

mrem-liter/pCi-yr

NUCLIDE	BONE	LIVER	T.BODY	THYROID	KIDNEY	LUNG	GI-LLI
H-3	0.00E+00	4.24E-05	4.24E-05	4.24E-05	4.24E-05	4.24E-05	4.24E-05
C-14	1.62E-03	3.25E-04	3.25E-04	3.25E-04	3.25E-04	3.25E-04	3.25E-04
Na-24	0.00E+00	0.00E+00	0.00E+00	0.00E+00	0.00E+00	0.00E+00	0.00E+00
P-32	1.00E-01	6.21E-03	3.88E-03	0.00E+00	0.00E+00	0.00E+00	8.42E-03
Cr-51	0.00E+00	0.00E+00	1.37E-06	7.61E-07	3.00E-07	1.96E-06	2.30E-04
Mn-54	0.00E+00	2.35E-03	4.66E-04	0.00E+00	7.01E-04	0.00E+00	4.82E-03
Mn-56	0.00E+00	0.00E+00	0.00E+00	0.00E+00	0.00E+00	0.00E+00	0.00E+00
Fe-55	1.51E-03	1.07E-03	2.50E-04	0.00E+00	0.00E+00	6.79E-04	4.63E-04
Fe-59	2.28E-03	5.31E-03	2.05E-03	0.00E+00	0.00E+00	1.68E-03	1.26E-02
Co-58	0.00E+00	3.81E-04	8.79E-04	0.00E+00	0.00E+00	0.00E+00	5.26E-03
Co-60	0.00E+00	1.12E-03	2.53E-03	0.00E+00	0.00E+00	0.00E+00	1.46E-02
Ni-63	7.08E-02	5.00E-03	2.40E-03	0.00E+00	0.00E+00	0.00E+00	7.96E-04
Ni-65	0.00E+00	0.00E+00	0.00E+00	0.00E+00	0.00E+00	0.00E+00	0.00E+00
Cu-64	0.00E+00	0.00E+00	0.00E+00	0.00E+00	0.00E+00	0.00E+00	0.00E+00
Zn-65	2.29E-03	7.95E-03	3.71E-03	0.00E+00	5.09E-03	0.00E+00	3.37E-03
Zn-69	0.00E+00	0.00E+00	0.00E+00	0.00E+00	0.00E+00	0.00E+00	0.00E+00
Br-83	0.00E+00	0.00E+00	0.00E+00	0.00E+00	0.00E+00	0.00E+00	0.00E+00
Br-84	0.00E+00	0.00E+00	0.00E+00	0.00E+00	0.00E+00	0.00E+00	0.00E+00
Br-85	0.00E+00	0.00E+00	0.00E+00	0.00E+00	0.00E+00	0.00E+00	0.00E+00
Rb-86	0.00E+00	1.11E-02	5.20E-03	0.00E+00	0.00E+00	0.00E+00	1.64E-03
Rb-88	0.00E+00	0.00E+00	0.00E+00	0.00E+00	0.00E+00	0.00E+00	0.00E+00
Rb-89	0.00E+00	0.00E+00	0.00E+00	0.00E+00	0.00E+00	0.00E+00	0.00E+00
Sr-89	1.71E-01	0.00E+00	4.90E-03	0.00E+00	0.00E+00	0.00E+00	2.04E-02
Sr-90	3.32E+00	0.00E+00	8.20E-01	0.00E+00	0.00E+00	0.00E+00	9.32E-02
Sr-91	0.00E+00	0.00E+00	0.00E+00	0.00E+00	0.00E+00	0.00E+00	0.00E+00
Sr-92	0.00E+00	0.00E+00	0.00E+00	0.00E+00	0.00E+00	0.00E+00	0.00E+00
Y-90	0.00E+00	0.00E+00	0.00E+00	0.00E+00	0.00E+00	0.00E+00	0.00E+00
Y-91m	0.00E+00	0.00E+00	0.00E+00	0.00E+00	0.00E+00	0.00E+00	0.00E+00
Y-91	7.85E-05	0.00E+00	2.11E-06	0.00E+00	0.00E+00	0.00E+00	3.22E-02
Y-92	0.00E+00	0.00E+00	0.00E+00	0.00E+00	0.00E+00	0.00E+00	0.00E+00
Y-93	0.00E+00	0.00E+00	0.00E+00	0.00E+00	0.00E+00	0.00E+00	0.00E+00
Zr-95	1.61E-05	5.09E-06	3.50E-06	0.00E+00	7.48E-06	0.00E+00	1.17E-02
Zr-97	0.00E+00	0.00E+00	0.00E+00	0.00E+00	0.00E+00	0.00E+00	0.00E+00
Nb-95	3.16E-06	1.75E-06	9.65E-07	0.00E+00	1.70E-06	0.00E+00	7.50E-03
Mo-99	0.00E+00	0.00E+00	0.00E+00	0.00E+00	0.00E+00	0.00E+00	0.00E+00
Tc-99m	0.00E+00	0.00E+00	0.00E+00	0.00E+00	0.00E+00	0.00E+00	0.00E+00

NIMS REPORT ID:	WMXR751
FREQUENCY:	DAILY
RUN DATE:	2/24/2004
DATA SOURCE:	NDSS

CARB Schedule

ppl

Manager	CR Number	CARB Date LER Date	Problem Statement	Original Reso Due	Resp Group	CR Sig Level
PAGODIN, R.	CR 445379	02/26/04 Effectiveness Review	"E" DG TRIPPED ON REVERSE POWER DURING SO-024-001 LOADING	4/7/2003	312GL-PDC-NSE ELEC LEAD	L2 CAUSE
RUPPERT, G.	N/A 479680	02/26/04 Effectiveness Review	INADEQUATE ATTENTION TO FIRE PROTECTION IMPAIRMENTS	1/30/2004	350SS-OPS C SHIFT SUPV	
SMITH JR, W.	CR 534137	02/26/04	SIGNIFICANT OPERATING EXPERIENCE REPORT (SOER) REVIEW PROGRAM IS OUT OF DATE AND NOT BEING RIGOROUSLY IMPLEMENTED (I.E. NO EFFECTIVE LONG-TERM TRACKING, MAINTENANCE, OR OWNERSHIP OF SOERS), WHICH IS A REPEAT PROBLEM FROM CR 96-1873.	2/26/2004	306CH-OES CA HEAD	L2 CAUSE
SMITH JR, W.	WGA 537460	02/26/04	DOCUMENT CARB REVIEW OF NDAP-QA-0702 AND NDAP-00-0752 IN 2004.		306CH-OES CA HEAD	
SMITH JR, W.	MGNT 547595	02/26/04	DOCUEMENT CAA SEMI-ANNUAL TREND REPORT FOR FEB 2004 REPORT	6/1/2004	306CH-OES CA HEAD	
RUPPERT, G.	CR 528151	03/04/04	AN NRC INSPECTOR'S OBSERVED THAT L.C.O. 3.6.4.1 ACTION C.1 WAS NOT COMPLIED WITH WHEN THE ZONE III DELTA PRESSURE ALARM WAS RECEIVED AT 2C275. THIS ISSUE WILL LIKELY RESULT IN A GREEN FINDING DURING THE 4TH QTR NRC INSPECTION REPORT.	2/20/2004	350GL-OPS AOM WORK CONTRL	L2 CAUSE
PAGODIN, R.	CR 530757	03/04/04	DUAL UNIT S/D LCO ENTERED DUE TO LOSS OF SECONDARY CONTAINMENT DP	3/4/2004	311GL-JPF-NSE BOP LEAD	L2 CAUSE
GLASSIC, D.	CR 536791	03/04/04	RB ZONES 2 & 3 CROSSTIED.	2/25/2004	336CH-PLT SCHED CA HEAD	L2 CAUSE

Manager	CR Number	CARB Date LER Date	Problem Statement	Original Reso Due	Resp Group	CR Sig Level
RUPPERT, G.	CR 540553	03/04/04	RADIOACTIVE SHIPMENTS 04-04 AND 04-05 WERE INVOLVED IN A SEVERE ACCIDENT ENROUTE TO RICHLAND, WASHINGTON FROM SUSQUEHANNA.	2/28/2004	350GL-OPS ENGRG SUPV	L1 CAUSE
RUPPERT, G.	CR 542361	03/04/04	MULTIPLE EXAMPLES DOCUMENT THAT OPERATIONS DEPARTMENT INDUSTRY EXPERIENCE REVIEW PROCESS IS NOT EFFECTIVE	2/25/2004	350GL-OPS AOM WORK CONTRL	L2 CAUSE
PAGODIN, R.	CR 533566	03/11/04	WANO 2003 AFI AREA FOR IMPROVEMENT - MODIFICATION ASPECT (PS.1-1)	3/11/2004	364-CR/CRA INCOMING	L2 CAUSE
PAGODIN, R.	CR 538251	03/11/04	ENGINEERING RIGOR APPLIED TO TECHNICAL EVALUATION OF ISSUES LESS THAN ADEQUATE	3/15/2004	314RC-PROGRAMS/COMPONENTS	L2 CAUSE
GRISEWOOD,	N/A 471190	03/18/04 Effectiveness Review	LESS THAN ADEQUATE COMMUNICATIONS FOLLOWING FAILURE OF T-20 STARTUP TRANSFORMER ON 10/3/02	2/28/2004	380RC-NUC EMERG PLANNING	
GLASSIC, D.	CR 541976	03/18/04	INADVERTANT CROSS CONNECT OF ZONE 1 TO ZONE 3 HVAC DURING RWCU SOW	3/11/2004	336CH-PLT SCHED CA HEAD	L2 CAUSE
SUTTON, D.	CR 547535	03/18/04	2D666 CONTROL BOARDS	3/9/2004	376CH-PROCUREMENT CA HEAD	L2 CAUSE
PAGODIN, R.	CR 543172	03/25/04	'A' DIESEL GENERATOR FAILED MONTHLY OPERABILITY TEST, SO-024-001	3/16/2004	312GL-PDC-NSE ELEC LEAD	L1 RCA
KIRWIN, T.	CR 543586	03/25/04	UNIT 1 CONTROL ROD 34-07 DRIFTED FROM POSITION 48 TO POSITION 34 DURING I&C SURVEILLANCE	3/17/2004	330RC-NUCLEAR MAINTENANCE	L2 RCA
KIRWIN, T.	CR 548291	03/25/04	OSHA RECORDABLE - SAFETY INCIDENT	3/12/2004	330GL-MNT ADMIN SUPV	L2 CAUSE

Manager	CR Number	CARB Date LER Date	Problem Statement	Original Reso Due	Resp Group	CR Sig Level
FORCE, M.	CR 527432	04/01/04	FIRE OCCURRED IN NPS CHANGE TRAILER, NORTH OF RADWASTE BUILDING	3/19/2004	335CH-NUC. FACILITIES MGM	L1 CAUSE
PAGODIN, R.	CR 544336	04/01/04	UNIT 2 VITAL UPS APPEARS FAULTED	3/20/2004	312GL-PDC-NSE ELEC LEAD	L1 RCA
KIRWIN, T.	CR 544874	04/01/04	WHILE INVESTIGATING A LEAK ON THE 0E506B-LUBE OIL COOLER, WE FOUND ABOUT HALF OF THE BOLTING ON THE WEST END WATER BOX JOINT TO THE HEAT EXCHANGER LESS THAN WRENCH TIGHT. THE BOLTS WERE TIGHTENED TO STOP THE LEAK. THE JOINT WAS LATER TORQUE	3/23/2004	330-AR/CR INCOMING	L2 CAUSE
FERENTZ, R.	CR 544951	04/01/04	DOOR #718 WAS FOUND PROPPED OPEN COMPROMISING ZONE 2 INTEGRITY.	3/23/2004	346RC-NUCLEAR SECURITY	L2 CAUSE
ANDERSON, R.	CR 545459	04/01/04	THE CORRECTIVE ACTIONS FOR CR 425608 UNIT 2 REACTOR SCRAM ON MAIN TURBINE TRIP DUE TO LOW CONDENSER VACUUM HAVE NOT BEEN IMPLEMENTED CONSISTENT WITH THE RCA EVALUATION DUE DATES	3/25/2004	301RC-GEN MGR SSES	L1 RCA
KIRWIN, T.	CR 458959	04/08/04	DISCREPANCIES OBSERVED AMONG INSTALLED CARDS IN 125 VDC BATTERY CHARGERS	3/31/2004	330RC-NUCLEAR MAINTENANCE	L3 EVAL
GLASSIC, D.	CR 546574	04/08/04	NRC PI&R POTENTIAL FINDING / ISSUE: STATION DID NOT PROMPTLY CORRECT A PERFORMANCE DEFICIENCY AND CONDITION ADVERSE TO QUALITY ON CORE SPRAY PUMP PRIOR TO PUMP BECOMING INOPERABLE.	3/30/2004	336CH-PLT SCHED CA HEAD	L2 CAUSE
WEBB, H.	CR 549077	04/15/04	INADEQUACY OF GENERIC LETTER 89-10 DESIGN BASES FOR "E" EMERGENCY DIESEL GENERATOR ESW SUPPLY & RETURN VALVES (EC-VALV-0571)	4/7/2004	320RC-DESIGN ENGINEERING	L2 CAUSE
BABCZAK, S.	MGNT 509773	WRITTEN COMMENT	CR 380489 CA#24 WAS INEFFECTIVE IN ADDRESS THE IMPACT OF FUTURE STAFFING CHANGES ON NERO		236CH-NUC HR&D RC HEAD	

Manager	CR Number	CARB Date LER Date	Problem Statement	Original Reso Due	Resp Group	CR Sig Level
SGARRO, R.	CR 510735	WRITTEN COMMENT	CONTRARY TO ACTIONS TAKEN IN CRA 412756 THE NRA 3-MO ACTIVITY PROJ NO LONGER CONTAINS AN IRT NOTATION	11/24/2003	381RC-FUM REG AFFAIRS	L3 EVAL
SGARRO, R.	MGNT 510747	WRITTEN COMMENT	NO DOCUMENTED EVIDENCE OF BENCHMARKING ACTIVITIES THAT WERE DONE PER CRA 412757 IN RESPONSE TO NRC E-PLAN WHITE FINDING RCA	3/1/2004	381RC-FUM REG AFFAIRS	
PAGODIN, R.	CR 513052	WRITTEN COMMENT	UNEXPLAINED SPEED INCREASE ON THE "2B" REACTOR FEEDWATER PUMP	11/21/2003	311GL-JPF-NSE BOP LEAD	L2 CAUSE
PAGODIN, R.	CR 513790	WRITTEN COMMENT	LEAK IDENTIFIED ON RWCU FILTER 1F203B	11/26/2003	311GL-GGM-NSE NSSS LEAD	L2 CAUSE
SMITH JR, W.	CR 516812	WRITTEN	SEVEN AR/CR'S GENERATED SINCE JANUARY 2002 SHOULD HAVE BEEN IDENTIFIED AS SIGNIFICANT CONDITIONS ADVERSE TO QUALITY (SCAQ).	2/16/2004	306CH-OES CA HEAD	L2 CAUSE
PAGODIN, R.	CR 521461	WRITTEN COMMENT	WANO 2003 AFI AREA FOR IMPROVEMENT (EQ.1-3)	12/19/2003	312GL-PDC-NSE ELEC LEAD	L2 CAUSE
KEHL, K.	CR 529323	WRITTEN COMMENT	MEDICAL EMERGENCY AT THE APF	1/23/2004	024GL-SAFETY	L1 EVAL
SUTTON, D.	CR 530240	WRITTEN	CORRECTIVE ACTIONS DID NOT PREVENT RECURRENCE FOR ISSUES IDENTIFIED PER FINDING AR 405030 "WELD FILLER METAL CONTROL PROGRAM IMPLEMENTATION DEFICIENCIES."	2/19/2004	376CH-PROCUREMENT CA HEAD	L2 CAUSE
FERENTZ, R.	CR 532283	WRITTEN	SECURITY FORCE STAFFING - COMPETING REQUIREMENTS EMERGENCY PLAN & SECURITY PLAN	2/28/2004	346RC-NUCLEAR SECURITY	L2 CAUSE
SGARRO, R.	CR 546352	WRITTEN	ADVERSE TREND CR- THERE HAVE BEEN 3 RECENT INSTANCES OF NRC PERFORMANCE INDICATORS UPDATED INCORRECTLY	3/27/2004	381RC-FUM REG AFFAIRS	L2 CAUSE

REMP DOSE FACTORS FOR TEEN AGE GROUP: MILK (Page 2 of 2)

mrem-liter/pCi-yr

NUCLIDE	BONE	LIVER	T.BODY	THYROID	KIDNEY	LUNG	GI-LLI
Tc-101	0.00E+00	0.00E+00	0.00E+00	0.00E+00	0.00E+00	0.00E+00	0.00E+00
Ru-103	9.85E-05	0.00E+00	4.21E-05	0.00E+00	3.47E-04	0.00E+00	8.23E-03
Ru-105	0.00E+00	0.00E+00	0.00E+00	0.00E+00	0.00E+00	0.00E+00	0.00E+00
Ru-106	1.56E-03	0.00E+00	1.97E-04	0.00E+00	3.01E-03	0.00E+00	7.49E-02
Ag-110m	8.15E-05	7.72E-05	4.69E-05	0.00E+00	1.47E-04	0.00E+00	2.17E-02
Te-125m	1.50E-03	5.39E-04	2.00E-04	4.18E-04	0.00E+00	0.00E+00	4.41E-03
Te-127m	3.82E-03	1.35E-03	4.54E-04	9.08E-04	1.55E-02	0.00E+00	9.52E-03
Te-127	0.00E+00	0.00E+00	0.00E+00	0.00E+00	0.00E+00	0.00E+00	0.00E+00
Te-129m	6.26E-03	2.32E-03	9.90E-04	2.02E-03	2.62E-02	0.00E+00	2.35E-02
Te-129	1.72E-05	6.41E-06	4.18E-06	1.23E-05	7.22E-05	0.00E+00	9.40E-05
Te-131m	0.00E+00	0.00E+00	0.00E+00	0.00E+00	0.00E+00	0.00E+00	0.00E+00
Te-131	0.00E+00	0.00E+00	0.00E+00	0.00E+00	0.00E+00	0.00E+00	0.00E+00
Te-132	0.00E+00	0.00E+00	0.00E+00	0.00E+00	0.00E+00	0.00E+00	0.00E+00
I-130	0.00E+00	0.00E+00	0.00E+00	0.00E+00	0.00E+00	0.00E+00	0.00E+00
I-131	1.97E-03	2.76E-03	1.48E-03	8.05E-01	4.75E-03	0.00E+00	5.45E-04
I-132	0.00E+00	0.00E+00	0.00E+00	0.00E+00	0.00E+00	0.00E+00	0.00E+00
I-133	0.00E+00	0.00E+00	0.00E+00	0.00E+00	0.00E+00	0.00E+00	0.00E+00
I-134	0.00E+00	0.00E+00	0.00E+00	0.00E+00	0.00E+00	0.00E+00	0.00E+00
I-135	0.00E+00	0.00E+00	0.00E+00	0.00E+00	0.00E+00	0.00E+00	0.00E+00
Cs-134	3.34E-02	7.87E-02	3.65E-02	0.00E+00	2.50E-02	9.54E-03	9.78E-04
Cs-136	3.09E-03	1.22E-02	8.17E-03	0.00E+00	6.62E-03	1.04E-03	9.79E-04
Cs-137	4.48E-02	5.96E-02	2.08E-02	0.00E+00	2.03E-02	7.88E-03	8.48E-04
Cs-138	0.00E+00	0.00E+00	0.00E+00	0.00E+00	0.00E+00	0.00E+00	0.00E+00
Ba-139	0.00E+00	0.00E+00	0.00E+00	0.00E+00	0.00E+00	0.00E+00	0.00E+00
Ba-140	1.02E-02	1.25E-06	6.57E-04	0.00E+00	4.24E-06	8.40E-06	1.57E-02
Ba-141	0.00E+00	0.00E+00	0.00E+00	0.00E+00	0.00E+00	0.00E+00	0.00E+00
Ba-142	0.00E+00	0.00E+00	0.00E+00	0.00E+00	0.00E+00	0.00E+00	0.00E+00
La-140	0.00E+00	0.00E+00	0.00E+00	0.00E+00	0.00E+00	0.00E+00	0.00E+00
La-142	0.00E+00	0.00E+00	0.00E+00	0.00E+00	0.00E+00	0.00E+00	0.00E+00
Ce-141	5.10E-06	3.40E-06	3.91E-07	0.00E+00	1.60E-06	0.00E+00	9.74E-03
Ce-143	0.00E+00	0.00E+00	0.00E+00	0.00E+00	0.00E+00	0.00E+00	0.00E+00
Ce-144	2.77E-04	1.15E-04	1.49E-05	0.00E+00	6.85E-05	0.00E+00	6.97E-02
Pr-143	4.73E-06	1.89E-06	2.35E-07	0.00E+00	1.10E-06	0.00E+00	1.56E-02
Pr-144	0.00E+00	0.00E+00	0.00E+00	0.00E+00	0.00E+00	0.00E+00	0.00E+00
Nd-147	3.31E-06	3.60E-06	2.15E-07	0.00E+00	2.11E-06	0.00E+00	1.30E-02
W-187	0.00E+00	0.00E+00	0.00E+00	0.00E+00	0.00E+00	0.00E+00	0.00E+00
Np-239	0.00E+00	0.00E+00	0.00E+00	0.00E+00	0.00E+00	0.00E+00	0.00E+00

REMP DOSE FACTORS FOR TEEN AGE GROUP: LEAFY VEG. SAMPLES (Page 1 of 2)
mrem-kg/pCi-yr

NUCLIDE	BONE	LIVER	T.BODY	THYROID	KIDNEY	LUNG	GI-LLI
H-3	0.00E+00	4.45E-06	4.45E-06	4.45E-06	4.45E-06	4.45E-06	4.45E-06
C-14	1.71E-04	3.41E-05	3.41E-05	3.41E-05	3.41E-05	3.41E-05	3.41E-05
Na-24	0.00E+00	0.00E+00	0.00E+00	0.00E+00	0.00E+00	0.00E+00	0.00E+00
P-32	1.10E-02	6.84E-04	4.28E-04	0.00E+00	0.00E+00	0.00E+00	9.28E-04
Cr-51	0.00E+00	0.00E+00	1.47E-07	8.19E-08	3.23E-08	2.11E-07	2.48E-05
Mn-54	0.00E+00	2.47E-04	4.90E-05	0.00E+00	7.38E-05	0.00E+00	5.07E-04
Mn-56	0.00E+00	0.00E+00	0.00E+00	0.00E+00	0.00E+00	0.00E+00	0.00E+00
Fe-55	1.59E-04	1.12E-04	2.62E-05	0.00E+00	0.00E+00	7.13E-05	4.87E-05
Fe-59	2.43E-04	5.67E-04	2.19E-04	0.00E+00	0.00E+00	1.79E-04	1.34E-03
Co-58	0.00E+00	4.04E-05	9.32E-05	0.00E+00	0.00E+00	0.00E+00	5.57E-04
Co-60	0.00E+00	1.18E-04	2.66E-04	0.00E+00	0.00E+00	0.00E+00	1.54E-03
Ni-63	7.43E-03	5.25E-04	2.52E-04	0.00E+00	0.00E+00	0.00E+00	8.36E-05
Ni-65	0.00E+00	0.00E+00	0.00E+00	0.00E+00	0.00E+00	0.00E+00	0.00E+00
Cu-64	0.00E+00	0.00E+00	0.00E+00	0.00E+00	0.00E+00	0.00E+00	0.00E+00
Zn-65	2.41E-04	8.38E-04	3.91E-04	0.00E+00	5.36E-04	0.00E+00	3.55E-04
Zn-69	0.00E+00	0.00E+00	0.00E+00	0.00E+00	0.00E+00	0.00E+00	0.00E+00
Br-83	0.00E+00	0.00E+00	0.00E+00	0.00E+00	0.00E+00	0.00E+00	0.00E+00
Br-84	0.00E+00	0.00E+00	0.00E+00	0.00E+00	0.00E+00	0.00E+00	0.00E+00
Br-85	0.00E+00	0.00E+00	0.00E+00	0.00E+00	0.00E+00	0.00E+00	0.00E+00
Rb-86	0.00E+00	1.21E-03	5.67E-04	0.00E+00	0.00E+00	0.00E+00	1.78E-04
Rb-88	0.00E+00	0.00E+00	0.00E+00	0.00E+00	0.00E+00	0.00E+00	0.00E+00
Rb-89	0.00E+00	0.00E+00	0.00E+00	0.00E+00	0.00E+00	0.00E+00	0.00E+00
Sr-89	1.82E-02	0.00E+00	5.22E-04	0.00E+00	0.00E+00	0.00E+00	2.17E-03
Sr-90	3.49E-01	0.00E+00	8.61E-02	0.00E+00	0.00E+00	0.00E+00	9.79E-03
Sr-91	0.00E+00	0.00E+00	0.00E+00	0.00E+00	0.00E+00	0.00E+00	0.00E+00
Sr-92	0.00E+00	0.00E+00	0.00E+00	0.00E+00	0.00E+00	0.00E+00	0.00E+00
Y-90	0.00E+00	0.00E+00	0.00E+00	0.00E+00	0.00E+00	0.00E+00	0.00E+00
Y-91m	0.00E+00	0.00E+00	0.00E+00	0.00E+00	0.00E+00	0.00E+00	0.00E+00
Y-91	8.34E-06	0.00E+00	2.24E-07	0.00E+00	0.00E+00	0.00E+00	3.42E-03
Y-92	0.00E+00	0.00E+00	0.00E+00	0.00E+00	0.00E+00	0.00E+00	0.00E+00
Y-93	0.00E+00	0.00E+00	0.00E+00	0.00E+00	0.00E+00	0.00E+00	0.00E+00
Zr-95	1.71E-06	5.40E-07	3.71E-07	0.00E+00	7.94E-07	0.00E+00	1.25E-03
Zr-97	0.00E+00	0.00E+00	0.00E+00	0.00E+00	0.00E+00	0.00E+00	0.00E+00
Nb-95	3.38E-07	1.88E-07	1.03E-07	0.00E+00	1.82E-07	0.00E+00	8.03E-04
Mo-99	0.00E+00	0.00E+00	0.00E+00	0.00E+00	0.00E+00	0.00E+00	0.00E+00
Tc-99m	0.00E+00	0.00E+00	0.00E+00	0.00E+00	0.00E+00	0.00E+00	0.00E+00

REMP DOSE FACTORS FOR TEEN AGE GROUP: FRUIT SAMPLES (Page 2 of 2)
mrem-kg/pCi-yr

NUCLIDE	BONE	LIVER	T.BODY	THYROID	KIDNEY	LUNG	GI-LLI
Tc-101	0.00E+00	0.00E+00	0.00E+00	0.00E+00	0.00E+00	0.00E+00	0.00E+00
Ru-103	5.58E-05	0.00E+00	2.39E-05	0.00E+00	1.97E-04	0.00E+00	4.66E-03
Ru-105	0.00E+00	0.00E+00	0.00E+00	0.00E+00	0.00E+00	0.00E+00	0.00E+00
Ru-106	2.21E-03	0.00E+00	2.78E-04	0.00E+00	4.25E-03	0.00E+00	1.06E-01
Ag-110m	1.09E-04	1.03E-04	6.29E-05	0.00E+00	1.97E-04	0.00E+00	2.91E-02
Te-125m	1.18E-03	4.24E-04	1.57E-04	3.29E-04	0.00E+00	0.00E+00	3.48E-03
Te-127m	4.16E-03	1.48E-03	4.95E-04	9.89E-04	1.69E-02	0.00E+00	1.04E-02
Te-127	0.00E+00	0.00E+00	0.00E+00	0.00E+00	0.00E+00	0.00E+00	0.00E+00
Te-129m	2.98E-03	1.11E-03	4.71E-04	9.61E-04	1.25E-02	0.00E+00	1.12E-02
Te-129	8.19E-06	3.05E-06	1.99E-06	5.85E-06	3.44E-05	0.00E+00	4.48E-05
Te-131m	0.00E+00	0.00E+00	0.00E+00	0.00E+00	0.00E+00	0.00E+00	0.00E+00
Te-131	0.00E+00	0.00E+00	0.00E+00	0.00E+00	0.00E+00	0.00E+00	0.00E+00
Te-132	0.00E+00	0.00E+00	0.00E+00	0.00E+00	0.00E+00	0.00E+00	0.00E+00
I-130	0.00E+00	0.00E+00	0.00E+00	0.00E+00	0.00E+00	0.00E+00	0.00E+00
I-131	2.09E-05	2.93E-05	1.57E-05	8.54E-03	5.04E-05	0.00E+00	5.79E-06
I-132	0.00E+00	0.00E+00	0.00E+00	0.00E+00	0.00E+00	0.00E+00	0.00E+00
I-133	0.00E+00	0.00E+00	0.00E+00	0.00E+00	0.00E+00	0.00E+00	0.00E+00
I-134	0.00E+00	0.00E+00	0.00E+00	0.00E+00	0.00E+00	0.00E+00	0.00E+00
I-135	0.00E+00	0.00E+00	0.00E+00	0.00E+00	0.00E+00	0.00E+00	0.00E+00
Cs-134	4.99E-02	1.17E-01	5.45E-02	0.00E+00	3.73E-02	1.42E-02	1.46E-03
Cs-136	2.30E-04	9.03E-04	6.07E-04	0.00E+00	4.92E-04	7.75E-05	7.27E-05
Cs-137	7.03E-02	9.35E-02	3.26E-02	0.00E+00	3.18E-02	1.24E-02	1.33E-03
Cs-138	0.00E+00	0.00E+00	0.00E+00	0.00E+00	0.00E+00	0.00E+00	0.00E+00
Ba-139	0.00E+00	0.00E+00	0.00E+00	0.00E+00	0.00E+00	0.00E+00	0.00E+00
Ba-140	6.92E-04	8.48E-08	4.46E-05	0.00E+00	2.88E-07	5.71E-07	1.07E-03
Ba-141	0.00E+00	0.00E+00	0.00E+00	0.00E+00	0.00E+00	0.00E+00	0.00E+00
Ba-142	0.00E+00	0.00E+00	0.00E+00	0.00E+00	0.00E+00	0.00E+00	0.00E+00
La-140	0.00E+00	0.00E+00	0.00E+00	0.00E+00	0.00E+00	0.00E+00	0.00E+00
La-142	0.00E+00	0.00E+00	0.00E+00	0.00E+00	0.00E+00	0.00E+00	0.00E+00
Ce-141	2.33E-06	1.56E-06	1.79E-07	0.00E+00	7.32E-07	0.00E+00	4.45E-03
Ce-143	0.00E+00	0.00E+00	0.00E+00	0.00E+00	0.00E+00	0.00E+00	0.00E+00
Ce-144	3.79E-04	1.57E-04	2.04E-05	0.00E+00	9.36E-05	0.00E+00	9.52E-02
Pr-143	3.84E-07	1.53E-07	1.91E-08	0.00E+00	8.92E-08	0.00E+00	1.26E-03
Pr-144	0.00E+00	0.00E+00	0.00E+00	0.00E+00	0.00E+00	0.00E+00	0.00E+00
Nd-147	1.34E-07	1.46E-07	8.72E-09	0.00E+00	8.55E-08	0.00E+00	5.25E-04
W-187	0.00E+00	0.00E+00	0.00E+00	0.00E+00	0.00E+00	0.00E+00	0.00E+00
Np-239	0.00E+00	0.00E+00	0.00E+00	0.00E+00	0.00E+00	0.00E+00	0.00E+00

REMP DOSE FACTORS FOR TEEN AGE GROUP: FRUIT SAMPLES (Page 1 of 2)

mrem-kg/pCi-yr

NUCLIDE	BONE	LIVER	T.BODY	THYROID	KIDNEY	LUNG	GI-LLI
H-3	0.00E+00	6.62E-05	6.62E-05	6.62E-05	6.62E-05	6.62E-05	6.62E-05
C-14	2.56E-03	5.12E-04	5.12E-04	5.12E-04	5.12E-04	5.12E-04	5.12E-04
Na-24	0.00E+00	0.00E+00	0.00E+00	0.00E+00	0.00E+00	0.00E+00	0.00E+00
P-32	9.47E-03	5.87E-04	3.67E-04	0.00E+00	0.00E+00	0.00E+00	7.96E-04
Cr-51	0.00E+00	0.00E+00	5.05E-07	2.81E-07	1.11E-07	7.22E-07	8.49E-05
Mn-54	0.00E+00	3.25E-03	6.45E-04	0.00E+00	9.71E-04	0.00E+00	6.67E-03
Mn-56	0.00E+00	0.00E+00	0.00E+00	0.00E+00	0.00E+00	0.00E+00	0.00E+00
Fe-55	2.28E-03	1.62E-03	3.77E-04	0.00E+00	0.00E+00	1.03E-03	7.01E-04
Fe-59	1.46E-03	3.40E-03	1.31E-03	0.00E+00	0.00E+00	1.07E-03	8.04E-03
Co-58	0.00E+00	3.40E-04	7.84E-04	0.00E+00	0.00E+00	0.00E+00	4.69E-03
Co-60	0.00E+00	1.73E-03	3.90E-03	0.00E+00	0.00E+00	0.00E+00	2.26E-02
Ni-63	1.11E-01	7.87E-03	3.78E-03	0.00E+00	0.00E+00	0.00E+00	1.25E-03
Ni-65	0.00E+00	0.00E+00	0.00E+00	0.00E+00	0.00E+00	0.00E+00	0.00E+00
Cu-64	0.00E+00	0.00E+00	0.00E+00	0.00E+00	0.00E+00	0.00E+00	0.00E+00
Zn-65	3.06E-03	1.06E-02	4.96E-03	0.00E+00	6.80E-03	0.00E+00	4.50E-03
Zn-69	0.00E+00	0.00E+00	0.00E+00	0.00E+00	0.00E+00	0.00E+00	0.00E+00
Br-83	0.00E+00	0.00E+00	0.00E+00	0.00E+00	0.00E+00	0.00E+00	0.00E+00
Br-84	0.00E+00	0.00E+00	0.00E+00	0.00E+00	0.00E+00	0.00E+00	0.00E+00
Br-85	0.00E+00	0.00E+00	0.00E+00	0.00E+00	0.00E+00	0.00E+00	0.00E+00
Rb-86	0.00E+00	2.02E-03	9.50E-04	0.00E+00	0.00E+00	0.00E+00	2.99E-04
Rb-88	0.00E+00	0.00E+00	0.00E+00	0.00E+00	0.00E+00	0.00E+00	0.00E+00
Rb-89	0.00E+00	0.00E+00	0.00E+00	0.00E+00	0.00E+00	0.00E+00	0.00E+00
Sr-89	1.22E-01	0.00E+00	3.49E-03	0.00E+00	0.00E+00	0.00E+00	1.45E-02
Sr-90	5.21E+00	0.00E+00	1.29E+00	0.00E+00	0.00E+00	0.00E+00	1.46E-01
Sr-91	0.00E+00	0.00E+00	0.00E+00	0.00E+00	0.00E+00	0.00E+00	0.00E+00
Sr-92	0.00E+00	0.00E+00	0.00E+00	0.00E+00	0.00E+00	0.00E+00	0.00E+00
Y-90	0.00E+00	0.00E+00	0.00E+00	0.00E+00	0.00E+00	0.00E+00	0.00E+00
Y-91m	0.00E+00	0.00E+00	0.00E+00	0.00E+00	0.00E+00	0.00E+00	0.00E+00
Y-91	6.22E-05	0.00E+00	1.67E-06	0.00E+00	0.00E+00	0.00E+00	2.55E-02
Y-92	0.00E+00	0.00E+00	0.00E+00	0.00E+00	0.00E+00	0.00E+00	0.00E+00
Y-93	0.00E+00	0.00E+00	0.00E+00	0.00E+00	0.00E+00	0.00E+00	0.00E+00
Zr-95	1.36E-05	4.28E-06	2.94E-06	0.00E+00	6.28E-06	0.00E+00	9.87E-03
Zr-97	0.00E+00	0.00E+00	0.00E+00	0.00E+00	0.00E+00	0.00E+00	0.00E+00
Nb-95	1.58E-06	8.77E-07	4.83E-07	0.00E+00	8.50E-07	0.00E+00	3.75E-03
Mo-99	0.00E+00	0.00E+00	0.00E+00	0.00E+00	0.00E+00	0.00E+00	0.00E+00
Tc-99m	0.00E+00	0.00E+00	0.00E+00	0.00E+00	0.00E+00	0.00E+00	0.00E+00

REMP DOSE FACTORS FOR TEEN AGE GROUP: FRUIT SAMPLES (Page 2 of 2)

mrem-kg/pCi-yr

NUCLIDE	BONE	LIVER	T.BODY	THYROID	KIDNEY	LUNG	GI-LLI
Tc-101	0.00E+00	0.00E+00	0.00E+00	0.00E+00	0.00E+00	0.00E+00	0.00E+00
Ru-103	5.58E-05	0.00E+00	2.39E-05	0.00E+00	1.97E-04	0.00E+00	4.66E-03
Ru-105	0.00E+00	0.00E+00	0.00E+00	0.00E+00	0.00E+00	0.00E+00	0.00E+00
Ru-106	2.21E-03	0.00E+00	2.78E-04	0.00E+00	4.25E-03	0.00E+00	1.06E-01
Ag-110m	1.09E-04	1.03E-04	6.29E-05	0.00E+00	1.97E-04	0.00E+00	2.91E-02
Te-125m	1.18E-03	4.24E-04	1.57E-04	3.29E-04	0.00E+00	0.00E+00	3.48E-03
Te-127m	4.16E-03	1.48E-03	4.95E-04	9.89E-04	1.69E-02	0.00E+00	1.04E-02
Te-127	0.00E+00	0.00E+00	0.00E+00	0.00E+00	0.00E+00	0.00E+00	0.00E+00
Te-129m	2.98E-03	1.11E-03	4.71E-04	9.61E-04	1.25E-02	0.00E+00	1.12E-02
Te-129	8.19E-06	3.05E-06	1.99E-06	5.85E-06	3.44E-05	0.00E+00	4.48E-05
Te-131m	0.00E+00	0.00E+00	0.00E+00	0.00E+00	0.00E+00	0.00E+00	0.00E+00
Te-131	0.00E+00	0.00E+00	0.00E+00	0.00E+00	0.00E+00	0.00E+00	0.00E+00
Te-132	0.00E+00	0.00E+00	0.00E+00	0.00E+00	0.00E+00	0.00E+00	0.00E+00
I-130	0.00E+00	0.00E+00	0.00E+00	0.00E+00	0.00E+00	0.00E+00	0.00E+00
I-131	2.09E-05	2.93E-05	1.57E-05	8.54E-03	5.04E-05	0.00E+00	5.79E-06
I-132	0.00E+00	0.00E+00	0.00E+00	0.00E+00	0.00E+00	0.00E+00	0.00E+00
I-133	0.00E+00	0.00E+00	0.00E+00	0.00E+00	0.00E+00	0.00E+00	0.00E+00
I-134	0.00E+00	0.00E+00	0.00E+00	0.00E+00	0.00E+00	0.00E+00	0.00E+00
I-135	0.00E+00	0.00E+00	0.00E+00	0.00E+00	0.00E+00	0.00E+00	0.00E+00
Cs-134	4.99E-02	1.17E-01	5.45E-02	0.00E+00	3.73E-02	1.42E-02	1.46E-03
Cs-136	2.30E-04	9.03E-04	6.07E-04	0.00E+00	4.92E-04	7.75E-05	7.27E-05
Cs-137	7.03E-02	9.35E-02	3.26E-02	0.00E+00	3.18E-02	1.24E-02	1.33E-03
Cs-138	0.00E+00	0.00E+00	0.00E+00	0.00E+00	0.00E+00	0.00E+00	0.00E+00
Ba-139	0.00E+00	0.00E+00	0.00E+00	0.00E+00	0.00E+00	0.00E+00	0.00E+00
Ba-140	6.92E-04	8.48E-08	4.46E-05	0.00E+00	2.88E-07	5.71E-07	1.07E-03
Ba-141	0.00E+00	0.00E+00	0.00E+00	0.00E+00	0.00E+00	0.00E+00	0.00E+00
Ba-142	0.00E+00	0.00E+00	0.00E+00	0.00E+00	0.00E+00	0.00E+00	0.00E+00
La-140	0.00E+00	0.00E+00	0.00E+00	0.00E+00	0.00E+00	0.00E+00	0.00E+00
La-142	0.00E+00	0.00E+00	0.00E+00	0.00E+00	0.00E+00	0.00E+00	0.00E+00
Ce-141	2.33E-06	1.56E-06	1.79E-07	0.00E+00	7.32E-07	0.00E+00	4.45E-03
Ce-143	0.00E+00	0.00E+00	0.00E+00	0.00E+00	0.00E+00	0.00E+00	0.00E+00
Ce-144	3.79E-04	1.57E-04	2.04E-05	0.00E+00	9.36E-05	0.00E+00	9.52E-02
Pr-143	3.84E-07	1.53E-07	1.91E-08	0.00E+00	8.92E-08	0.00E+00	1.26E-03
Pr-144	0.00E+00	0.00E+00	0.00E+00	0.00E+00	0.00E+00	0.00E+00	0.00E+00
Nd-147	1.34E-07	1.46E-07	8.72E-09	0.00E+00	8.55E-08	0.00E+00	5.25E-04
W-187	0.00E+00	0.00E+00	0.00E+00	0.00E+00	0.00E+00	0.00E+00	0.00E+00
Np-239	0.00E+00	0.00E+00	0.00E+00	0.00E+00	0.00E+00	0.00E+00	0.00E+00

REMP DOSE FACTORS FOR TEEN AGE GROUP: MEAT SAMPLES (Page 1 of 2)

mrem-kg/pCi-yr

NUCLIDE	BONE	LIVER	T.BODY	THYROID	KIDNEY	LUNG	GI-LLI
H-3	0.00E+00	6.87E-06	6.87E-06	6.87E-06	6.87E-06	6.87E-06	6.87E-06
C-14	2.64E-04	5.28E-05	5.28E-05	5.28E-05	5.28E-05	5.28E-05	5.28E-05
Na-24	0.00E+00	0.00E+00	0.00E+00	0.00E+00	0.00E+00	0.00E+00	0.00E+00
P-32	6.80E-03	4.21E-04	2.64E-04	0.00E+00	0.00E+00	0.00E+00	5.72E-04
Cr-51	0.00E+00	0.00E+00	1.42E-07	7.88E-08	3.11E-08	2.03E-07	2.38E-05
Mn-54	0.00E+00	3.67E-04	7.28E-05	0.00E+00	1.09E-04	0.00E+00	7.52E-04
Mn-56	0.00E+00	0.00E+00	0.00E+00	0.00E+00	0.00E+00	0.00E+00	0.00E+00
Fe-55	2.42E-04	1.72E-04	4.01E-05	0.00E+00	0.00E+00	1.09E-04	7.43E-05
Fe-59	2.80E-04	6.53E-04	2.52E-04	0.00E+00	0.00E+00	2.06E-04	1.54E-03
Co-58	0.00E+00	5.19E-05	1.20E-04	0.00E+00	0.00E+00	0.00E+00	7.16E-04
Co-60	0.00E+00	1.81E-04	4.08E-04	0.00E+00	0.00E+00	0.00E+00	2.36E-03
Ni-63	1.15E-02	8.12E-04	3.90E-04	0.00E+00	0.00E+00	0.00E+00	1.29E-04
Ni-65	0.00E+00	0.00E+00	0.00E+00	0.00E+00	0.00E+00	0.00E+00	0.00E+00
Cu-64	0.00E+00	0.00E+00	0.00E+00	0.00E+00	0.00E+00	0.00E+00	0.00E+00
Zn-65	3.54E-04	1.23E-03	5.73E-04	0.00E+00	7.86E-04	0.00E+00	5.20E-04
Zn-69	0.00E+00	0.00E+00	0.00E+00	0.00E+00	0.00E+00	0.00E+00	0.00E+00
Br-83	0.00E+00	0.00E+00	0.00E+00	0.00E+00	0.00E+00	0.00E+00	0.00E+00
Br-84	0.00E+00	0.00E+00	0.00E+00	0.00E+00	0.00E+00	0.00E+00	0.00E+00
Br-85	0.00E+00	0.00E+00	0.00E+00	0.00E+00	0.00E+00	0.00E+00	0.00E+00
Rb-86	0.00E+00	9.21E-04	4.33E-04	0.00E+00	0.00E+00	0.00E+00	1.36E-04
Rb-88	0.00E+00	0.00E+00	0.00E+00	0.00E+00	0.00E+00	0.00E+00	0.00E+00
Rb-89	0.00E+00	0.00E+00	0.00E+00	0.00E+00	0.00E+00	0.00E+00	0.00E+00
Sr-89	2.17E-02	0.00E+00	6.23E-04	0.00E+00	0.00E+00	0.00E+00	2.59E-03
Sr-90	5.39E-01	0.00E+00	1.33E-01	0.00E+00	0.00E+00	0.00E+00	1.51E-02
Sr-91	0.00E+00	0.00E+00	0.00E+00	0.00E+00	0.00E+00	0.00E+00	0.00E+00
Sr-92	0.00E+00	0.00E+00	0.00E+00	0.00E+00	0.00E+00	0.00E+00	0.00E+00
Y-90	0.00E+00	0.00E+00	0.00E+00	0.00E+00	0.00E+00	0.00E+00	0.00E+00
Y-91m	0.00E+00	0.00E+00	0.00E+00	0.00E+00	0.00E+00	0.00E+00	0.00E+00
Y-91	1.03E-05	0.00E+00	2.76E-07	0.00E+00	0.00E+00	0.00E+00	4.23E-03
Y-92	0.00E+00	0.00E+00	0.00E+00	0.00E+00	0.00E+00	0.00E+00	0.00E+00
Y-93	0.00E+00	0.00E+00	0.00E+00	0.00E+00	0.00E+00	0.00E+00	0.00E+00
Zr-95	2.16E-06	6.80E-07	4.68E-07	0.00E+00	1.00E-06	0.00E+00	1.57E-03
Zr-97	0.00E+00	0.00E+00	0.00E+00	0.00E+00	0.00E+00	0.00E+00	0.00E+00
Nb-95	3.60E-07	2.00E-07	1.10E-07	0.00E+00	1.93E-07	0.00E+00	8.54E-04
Mo-99	0.00E+00	0.00E+00	0.00E+00	0.00E+00	0.00E+00	0.00E+00	0.00E+00
Tc-99m	0.00E+00	0.00E+00	0.00E+00	0.00E+00	0.00E+00	0.00E+00	0.00E+00

REMP DOSE FACTORS FOR TEEN AGE GROUP: MEAT SAMPLES (Page 2 of 2)

mrem-kg/pCi-yr

NUCLIDE	BONE	LIVER	T.BODY	THYROID	KIDNEY	LUNG	GI-LLI
Tc-101	0.00E+00	0.00E+00	0.00E+00	0.00E+00	0.00E+00	0.00E+00	0.00E+00
Ru-103	1.17E-05	0.00E+00	4.98E-06	0.00E+00	4.11E-05	0.00E+00	9.73E-04
Ru-105	0.00E+00	0.00E+00	0.00E+00	0.00E+00	0.00E+00	0.00E+00	0.00E+00
Ru-106	2.45E-04	0.00E+00	3.09E-05	0.00E+00	4.73E-04	0.00E+00	1.18E-02
Ag-110m	1.26E-05	1.19E-05	7.26E-06	0.00E+00	2.28E-05	0.00E+00	3.35E-03
Te-125m	1.96E-04	7.06E-05	2.62E-05	5.48E-05	0.00E+00	0.00E+00	5.78E-04
Te-127m	5.53E-04	1.96E-04	6.58E-05	1.32E-04	2.24E-03	0.00E+00	1.38E-03
Te-127	0.00E+00	0.00E+00	0.00E+00	0.00E+00	0.00E+00	0.00E+00	0.00E+00
Te-129m	7.01E-04	2.60E-04	1.11E-04	2.26E-04	2.93E-03	0.00E+00	2.63E-03
Te-129	1.93E-06	7.19E-07	4.69E-07	1.38E-06	8.09E-06	0.00E+00	1.05E-05
Te-131m	0.00E+00	0.00E+00	0.00E+00	0.00E+00	0.00E+00	0.00E+00	0.00E+00
Te-131	0.00E+00	0.00E+00	0.00E+00	0.00E+00	0.00E+00	0.00E+00	0.00E+00
Te-132	0.00E+00	0.00E+00	0.00E+00	0.00E+00	0.00E+00	0.00E+00	0.00E+00
I-130	0.00E+00	0.00E+00	0.00E+00	0.00E+00	0.00E+00	0.00E+00	0.00E+00
I-131	6.78E-05	9.49E-05	5.10E-05	2.77E-02	1.63E-04	0.00E+00	1.88E-05
I-132	0.00E+00	0.00E+00	0.00E+00	0.00E+00	0.00E+00	0.00E+00	0.00E+00
I-133	0.00E+00	0.00E+00	0.00E+00	0.00E+00	0.00E+00	0.00E+00	0.00E+00
I-134	0.00E+00	0.00E+00	0.00E+00	0.00E+00	0.00E+00	0.00E+00	0.00E+00
I-135	0.00E+00	0.00E+00	0.00E+00	0.00E+00	0.00E+00	0.00E+00	0.00E+00
Cs-134	5.34E-03	1.26E-02	5.83E-03	0.00E+00	3.99E-03	1.53E-03	1.56E-04
Cs-136	1.95E-04	7.66E-04	5.15E-04	0.00E+00	4.17E-04	6.57E-05	6.17E-05
Cs-137	7.27E-03	9.67E-03	3.37E-03	0.00E+00	3.29E-03	1.28E-03	1.38E-04
Cs-138	0.00E+00	0.00E+00	0.00E+00	0.00E+00	0.00E+00	0.00E+00	0.00E+00
Ba-139	0.00E+00	0.00E+00	0.00E+00	0.00E+00	0.00E+00	0.00E+00	0.00E+00
Ba-140	6.24E-04	7.65E-08	4.02E-05	0.00E+00	2.59E-07	5.14E-07	9.63E-04
Ba-141	0.00E+00	0.00E+00	0.00E+00	0.00E+00	0.00E+00	0.00E+00	0.00E+00
Ba-142	0.00E+00	0.00E+00	0.00E+00	0.00E+00	0.00E+00	0.00E+00	0.00E+00
La-140	0.00E+00	0.00E+00	0.00E+00	0.00E+00	0.00E+00	0.00E+00	0.00E+00
La-142	0.00E+00	0.00E+00	0.00E+00	0.00E+00	0.00E+00	0.00E+00	0.00E+00
Ce-141	5.64E-07	3.77E-07	4.33E-08	0.00E+00	1.77E-07	0.00E+00	1.08E-03
Ce-143	0.00E+00	0.00E+00	0.00E+00	0.00E+00	0.00E+00	0.00E+00	0.00E+00
Ce-144	4.31E-05	1.78E-05	2.32E-06	0.00E+00	1.06E-05	0.00E+00	1.08E-02
Pr-143	3.06E-07	1.22E-07	1.52E-08	0.00E+00	7.11E-08	0.00E+00	1.01E-03
Pr-144	0.00E+00	0.00E+00	0.00E+00	0.00E+00	0.00E+00	0.00E+00	0.00E+00
Nd-147	1.73E-07	1.88E-07	1.12E-08	0.00E+00	1.10E-07	0.00E+00	6.77E-04
W-187	0.00E+00	0.00E+00	0.00E+00	0.00E+00	0.00E+00	0.00E+00	0.00E+00
Np-239	0.00E+00	0.00E+00	0.00E+00	0.00E+00	0.00E+00	0.00E+00	0.00E+00

REMP DOSE FACTORS FOR TEEN AGE GROUP: FISH SAMPLES (Page 1 of 2)

mrem-kg/pCi-yr

NUCLIDE	BONE	LIVER	T.BODY	THYROID	KIDNEY	LUNG	GI-LLI
H-3	0.00E+00	1.70E-06	1.70E-06	1.70E-06	1.70E-06	1.70E-06	1.70E-06
C-14	6.50E-05	1.30E-05	1.30E-05	1.30E-05	1.30E-05	1.30E-05	1.30E-05
Na-24	1.21E-05	1.21E-05	1.21E-05	1.21E-05	1.21E-05	1.21E-05	1.21E-05
P-32	4.21E-03	2.61E-04	1.63E-04	0.00E+00	0.00E+00	0.00E+00	3.54E-04
Cr-51	0.00E+00	0.00E+00	5.62E-08	3.12E-08	1.23E-08	8.02E-08	9.44E-06
Mn-54	0.00E+00	9.42E-05	1.87E-05	0.00E+00	2.81E-05	0.00E+00	1.93E-04
Mn-56	0.00E+00	3.99E-09	7.09E-10	0.00E+00	5.05E-09	0.00E+00	2.63E-07
Fe-55	6.04E-05	4.28E-05	9.99E-06	0.00E+00	0.00E+00	2.72E-05	1.85E-05
Fe-59	9.25E-05	2.16E-04	8.33E-05	0.00E+00	0.00E+00	6.81E-05	5.10E-04
Co-58	0.00E+00	1.54E-05	3.55E-05	0.00E+00	0.00E+00	0.00E+00	2.12E-04
Co-60	0.00E+00	4.49E-05	1.01E-04	0.00E+00	0.00E+00	0.00E+00	5.85E-04
Ni-63	2.83E-03	2.00E-04	9.60E-05	0.00E+00	0.00E+00	0.00E+00	3.18E-05
Ni-65	1.63E-08	2.08E-09	9.48E-10	0.00E+00	0.00E+00	0.00E+00	1.13E-07
Cu-64	0.00E+00	4.97E-07	2.34E-07	0.00E+00	1.26E-06	0.00E+00	3.85E-05
Zn-65	9.19E-05	3.19E-04	1.49E-04	0.00E+00	2.04E-04	0.00E+00	1.35E-04
Zn-69	3.90E-15	7.42E-15	5.19E-16	0.00E+00	4.85E-15	0.00E+00	1.37E-14
Br-83	0.00E+00	0.00E+00	8.71E-10	0.00E+00	0.00E+00	0.00E+00	0.00E+00
Br-84	0.00E+00	0.00E+00	2.87E-20	0.00E+00	0.00E+00	0.00E+00	0.00E+00
Br-85	0.00E+00	0.00E+00	0.00E+00	0.00E+00	0.00E+00	0.00E+00	0.00E+00
Rb-86	0.00E+00	4.59E-04	2.16E-04	0.00E+00	0.00E+00	0.00E+00	6.80E-05
Rb-88	0.00E+00	0.00E+00	0.00E+00	0.00E+00	0.00E+00	0.00E+00	0.00E+00
Rb-89	0.00E+00	0.00E+00	0.00E+00	0.00E+00	0.00E+00	0.00E+00	0.00E+00
Sr-89	6.94E-03	0.00E+00	1.99E-04	0.00E+00	0.00E+00	0.00E+00	8.27E-04
Sr-90	1.33E-01	0.00E+00	3.28E-02	0.00E+00	0.00E+00	0.00E+00	3.73E-03
Sr-91	2.24E-05	0.00E+00	8.92E-07	0.00E+00	0.00E+00	0.00E+00	1.02E-04
Sr-92	1.05E-07	0.00E+00	4.49E-09	0.00E+00	0.00E+00	0.00E+00	2.68E+04
Y-90	1.69E-07	0.00E+00	4.55E-09	0.00E+00	0.00E+00	0.00E+00	1.39E-03
Y-91m	4.09E-18	0.00E+00	1.56E-19	0.00E+00	0.00E+00	0.00E+00	1.93E-16
Y-91	3.18E-06	0.00E+00	8.52E-08	0.00E+00	0.00E+00	0.00E+00	1.30E-03
Y-92	1.76E-10	0.00E+00	5.10E-12	0.00E+00	0.00E+00	0.00E+00	4.83E-06
Y-93	1.18E-08	0.00E+00	3.24E-10	0.00E+00	0.00E+00	0.00E+00	3.61E-04
Zr-95	6.52E-07	2.06E-07	1.41E-07	0.00E+00	3.02E-07	0.00E+00	4.75E-04
Zr-97	1.42E-08	2.80E-09	1.29E-09	0.00E+00	4.25E-09	0.00E+00	7.59E-04
Nb-95	1.29E-07	7.15E-08	3.94E-08	0.00E+00	6.93E-08	0.00E+00	3.06E-04
Mo-99	0.00E+00	7.50E-05	1.43E-05	0.00E+00	1.72E-04	0.00E+00	1.34E-04
Tc-99m	3.35E-10	9.35E-10	1.21E-08	0.00E+00	1.39E-08	5.19E-10	6.14E-07

REMP DOSE FACTORS FOR TEEN AGE GROUP: FISH SAMPLES (Page 2 of 2)
mrem-kg/pCi-yr

NUCLIDE	BONE	LIVER	T.BODY	THYROID	KIDNEY	LUNG	GI-LLI
Tc-101	0.00E+00	0.00E+00	0.00E+00	0.00E+00	0.00E+00	0.00E+00	0.00E+00
Ru-103	4.01E-06	0.00E+00	1.71E-06	0.00E+00	1.41E-05	0.00E+00	3.35E-04
Ru-105	8.23E-09	0.00E+00	3.19E-09	0.00E+00	1.04E-07	0.00E+00	6.64E-06
Ru-106	6.26E-05	0.00E+00	7.89E-06	0.00E+00	1.21E-04	0.00E+00	3.00E-03
Ag-110m	3.27E-06	3.10E-06	1.88E-06	0.00E+00	5.90E-06	0.00E+00	8.70E-04
Te-125m	6.06E-05	2.18E-05	8.09E-06	1.69E-05	0.00E+00	0.00E+00	1.79E-04
Te-127m	1.54E-04	5.45E-05	1.83E-05	3.66E-05	6.23E-04	0.00E+00	3.83E-04
Te-127	4.27E-07	1.51E-07	9.18E-08	2.94E-07	1.73E-06	0.00E+00	3.29E-05
Te-129m	2.55E-04	9.48E-05	4.04E-05	8.24E-05	1.07E-03	0.00E+00	9.59E-04
Te-129	7.02E-07	2.62E-07	1.71E-07	5.02E-07	2.95E-06	0.00E+00	3.84E-06
Te-131m	2.24E-05	1.08E-05	8.97E-06	1.62E-05	1.12E-04	0.00E+00	8.63E-04
Te-131	2.21E-24	0.00E+00	0.00E+00	1.71E-24	9.68E-24	0.00E+00	0.00E+00
Te-132	4.51E-05	2.86E-05	2.69E-05	3.01E-05	2.74E-04	0.00E+00	9.05E-04
I-130	4.29E-06	1.24E-05	4.96E-06	1.01E-03	1.91E-05	0.00E+00	9.54E-06
I-131	8.59E-05	1.20E-04	6.46E-05	3.51E-02	2.07E-04	0.00E+00	2.38E-05
I-132	3.23E-09	8.44E-09	3.03E-09	2.84E-07	1.33E-08	0.00E+00	3.68E-09
I-133	1.45E-05	2.45E-05	7.48E-06	3.42E-03	4.30E-05	0.00E+00	1.86E-05
I-134	1.39E-14	3.69E-14	1.33E-14	6.15E-13	5.82E-14	0.00E+00	4.86E-16
I-135	7.88E-07	2.03E-06	7.52E-07	1.30E-04	3.20E-06	0.00E+00	2.25E-06
Cs-134	1.34E-03	3.15E-03	1.46E-03	0.00E+00	1.00E-03	3.82E-04	3.92E-05
Cs-136	1.30E-04	5.13E-04	3.45E-04	0.00E+00	2.79E-04	4.40E-05	4.13E-05
Cs-137	1.79E-03	2.38E-03	8.30E-04	0.00E+00	8.11E-04	3.15E-04	3.39E-05
Cs-138	4.56E-20	8.75E-20	4.37E-20	0.00E+00	6.46E-20	7.52E-21	3.97E-23
Ba-139	1.38E-11	9.74E-15	4.03E-13	0.00E+00	9.18E-15	6.71E-15	1.23E-10
Ba-140	4.30E-04	5.27E-08	2.77E-05	0.00E+00	1.79E-07	3.55E-07	6.64E-04
Ba-141	0.00E+00	0.00E+00	0.00E+00	0.00E+00	0.00E+00	0.00E+00	0.00E+00
Ba-142	0.00E+00	0.00E+00	0.00E+00	0.00E+00	0.00E+00	0.00E+00	0.00E+00
La-140	3.68E-08	1.81E-08	4.81E-09	0.00E+00	0.00E+00	0.00E+00	1.04E-03
La-142	8.36E-14	3.71E-14	9.25E-15	0.00E+00	0.00E+00	0.00E+00	1.13E-09
Ce-141	2.08E-07	1.39E-07	1.60E-08	0.00E+00	6.55E-08	0.00E+00	3.98E-04
Ce-143	2.27E-08	1.65E-05	1.85E-09	0.00E+00	7.41E-09	0.00E+00	4.97E-04
Ce-144	1.11E-05	4.60E-06	5.97E-07	0.00E+00	2.75E-06	0.00E+00	2.79E-03
Pr-143	1.99E-07	7.95E-08	9.91E-09	0.00E+00	4.62E-08	0.00E+00	6.55E-04
Pr-144	0.00E+00	0.00E+00	0.00E+00	0.00E+00	0.00E+00	0.00E+00	0.00E+00
Nd-147	1.41E-07	1.53E-07	9.18E-09	0.00E+00	9.00E-08	0.00E+00	5.53E-04
W-187	1.16E-06	9.47E-07	3.32E-07	0.00E+00	0.00E+00	0.00E+00	2.56E-04
Np-239	2.10E-08	1.98E-09	1.10E-09	0.00E+00	6.21E-09	0.00E+00	3.18E-04

REMP DOSE FACTORS FOR TEEN AGE GROUP: DRINKING WATER (Page 1 of 2)

mrem-liter/pCi-yr

NUCLIDE	BONE	LIVER	T.BODY	THYROID	KIDNEY	LUNG	GI-LLI
H-3	0.00E+00	5.41E-05	5.41E-05	5.41E-05	5.41E-05	5.41E-05	5.41E-05
C-14	2.07E-03	4.14E-04	4.14E-04	4.14E-04	4.14E-04	4.14E-04	4.14E-04
Na-24	6.74E-04	6.74E-04	6.74E-04	6.74E-04	6.74E-04	6.74E-04	6.74E-04
P-32	1.37E-01	8.51E-03	5.33E-03	0.00E+00	0.00E+00	0.00E+00	1.15E-02
Cr-51	0.00E+00	0.00E+00	1.81E-06	1.01E-06	3.97E-07	2.59E-06	3.05E-04
Mn-54	0.00E+00	3.01E-03	5.96E-04	0.00E+00	8.97E-04	0.00E+00	6.16E-03
Mn-56	0.00E+00	3.20E-06	5.69E-07	0.00E+00	4.05E-06	0.00E+00	2.11E-04
Fe-55	1.93E-03	1.37E-03	3.19E-04	0.00E+00	0.00E+00	8.67E-04	5.91E-04
Fe-59	2.97E-03	6.93E-03	2.68E-03	0.00E+00	0.00E+00	2.19E-03	1.64E-02
Co-58	0.00E+00	4.93E-04	1.14E-03	0.00E+00	0.00E+00	0.00E+00	6.80E-03
Co-60	0.00E+00	1.43E-03	3.23E-03	0.00E+00	0.00E+00	0.00E+00	1.87E-02
Ni-63	9.03E-02	6.37E-03	3.06E-03	0.00E+00	0.00E+00	0.00E+00	1.01E-03
Ni-65	1.41E-05	1.80E-06	8.20E-07	0.00E+00	0.00E+00	0.00E+00	9.76E-05
Cu-64	0.00E+00	3.05E-05	1.43E-05	0.00E+00	7.71E-05	0.00E+00	2.36E-03
Zn-65	2.93E-03	1.02E-02	4.75E-03	0.00E+00	6.52E-03	0.00E+00	4.31E-03
Zn-69	9.65E-10	1.84E-09	1.29E-10	0.00E+00	1.20E-09	0.00E+00	3.39E-09
Br-83	0.00E+00	0.00E+00	9.02E-07	0.00E+00	0.00E+00	0.00E+00	0.00E+00
Br-84	0.00E+00	0.00E+00	5.81E-12	0.00E+00	0.00E+00	0.00E+00	0.00E+00
Br-85	0.00E+00	0.00E+00	0.00E+00	0.00E+00	0.00E+00	0.00E+00	0.00E+00
Rb-86	0.00E+00	1.49E-02	7.01E-03	0.00E+00	0.00E+00	0.00E+00	2.21E-03
Rb-88	0.00E+00	3.06E-17	1.63E-17	0.00E+00	0.00E+00	0.00E+00	2.62E-24
Rb-89	0.00E+00	2.74E-19	1.94E-19	0.00E+00	0.00E+00	0.00E+00	0.00E+00
Sr-89	2.23E-01	0.00E+00	6.38E-03	0.00E+00	0.00E+00	0.00E+00	2.65E-02
Sr-90	4.23E+00	0.00E+00	1.05E+00	0.00E+00	0.00E+00	0.00E+00	1.19E-01
Sr-91	1.71E-03	0.00E+00	6.82E-05	0.00E+00	0.00E+00	0.00E+00	7.78E-03
Sr-92	7.23E-05	0.00E+00	3.08E-06	0.00E+00	0.00E+00	0.00E+00	1.84E-03
Y-90	6.14E-06	0.00E+00	1.65E-07	0.00E+00	0.00E+00	0.00E+00	5.06E-02
Y-91m	2.93E-12	0.00E+00	1.12E-13	0.00E+00	0.00E+00	0.00E+00	1.38E-10
Y-91	1.02E-04	0.00E+00	2.73E-06	0.00E+00	0.00E+00	0.00E+00	4.18E-02
Y-92	5.89E-08	0.00E+00	1.70E-09	0.00E+00	0.00E+00	0.00E+00	1.62E-03
Y-93	8.57E-07	0.00E+00	2.35E-08	0.00E+00	0.00E+00	0.00E+00	2.62E-02
Zr-95	2.09E-05	6.59E-06	4.53E-06	0.00E+00	9.69E-06	0.00E+00	1.52E-02
Zr-97	7.39E-07	1.46E-07	6.73E-08	0.00E+00	2.22E-07	0.00E+00	3.96E-02
Nb-95	4.15E-06	2.30E-06	1.27E-06	0.00E+00	2.23E-06	0.00E+00	9.85E-03
Mo-99	0.00E+00	2.71E-03	5.17E-04	0.00E+00	6.20E-03	0.00E+00	4.86E-03
Tc-99m	4.25E-08	1.19E-07	1.54E-06	0.00E+00	1.77E-06	6.58E-08	7.79E-05

REMP DOSE FACTORS FOR TEEN AGE GROUP: DRINKING WATER (Page 2 of 2)

mrem-liter/pCi-yr

NUCLIDE	BONE	LIVER	T.BODY	THYROID	KIDNEY	LUNG	GI-LLI
Tc-101	1.07E-22	1.53E-22	1.50E-21	0.00E+00	2.76E-21	9.30E-23	0.00E+00
Ru-103	1.29E-04	0.00E+00	5.51E-05	0.00E+00	4.54E-04	0.00E+00	1.08E-02
Ru-105	1.71E-06	0.00E+00	6.63E-07	0.00E+00	2.15E-05	0.00E+00	1.38E-03
Ru-106	2.00E-03	0.00E+00	2.52E-04	0.00E+00	3.85E-03	0.00E+00	9.58E-02
Ag-110m	1.04E-04	9.88E-05	6.01E-05	0.00E+00	1.88E-04	0.00E+00	2.78E-02
Te-125m	1.94E-03	7.00E-04	2.60E-04	5.42E-04	0.00E+00	0.00E+00	5.73E-03
Te-127m	4.92E-03	1.74E-03	5.85E-04	1.17E-03	1.99E-02	0.00E+00	1.23E-02
Te-127	3.31E-05	1.17E-05	7.12E-06	2.28E-05	1.34E-04	0.00E+00	2.56E-03
Te-129m	8.23E-03	3.05E-03	1.30E-03	2.66E-03	3.44E-02	0.00E+00	3.09E-02
Te-129	2.26E-05	8.43E-06	5.50E-06	1.62E-05	9.49E-05	0.00E+00	1.24E-04
Te-131m	9.43E-04	4.52E-04	3.77E-04	6.80E-04	4.72E-03	0.00E+00	3.63E-02
Te-131	3.17E-14	1.31E-14	9.90E-15	2.44E-14	1.39E-13	0.00E+00	2.60E-15
Te-132	1.60E-03	1.01E-03	9.54E-04	1.07E-03	9.72E-03	0.00E+00	3.21E-02
I-130	2.68E-04	7.75E-04	3.10E-04	6.32E-02	1.19E-03	0.00E+00	5.96E-04
I-131	2.86E-03	4.00E-03	2.15E-03	1.17E+00	6.89E-03	0.00E+00	7.91E-04
I-132	3.82E-06	1.00E-05	3.59E-06	3.37E-04	1.58E-05	0.00E+00	4.36E-06
I-133	6.87E-04	1.17E-03	3.56E-04	1.63E-01	2.04E-03	0.00E+00	8.82E-04
I-134	5.75E-09	1.52E-08	5.47E-09	2.54E-07	2.40E-08	0.00E+00	2.01E-10
I-135	8.84E-05	2.27E-04	8.43E-05	1.46E-02	3.59E-04	0.00E+00	2.52E-04
Cs-134	4.27E-02	1.00E-01	4.66E-02	0.00E+00	3.19E-02	1.22E-02	1.25E-03
Cs-136	4.27E-03	1.68E-02	1.13E-02	0.00E+00	9.14E-03	1.44E-03	1.35E-03
Cs-137	5.71E-02	7.60E-02	2.65E-02	0.00E+00	2.59E-02	1.00E-02	1.08E-03
Cs-138	7.58E-12	1.46E-11	7.28E-12	0.00E+00	1.07E-11	1.25E-12	6.60E-15
Ba-139	1.77E-07	1.24E-10	5.15E-09	0.00E+00	1.17E-10	8.57E-11	1.58E-06
Ba-140	1.41E-02	1.73E-06	9.08E-04	0.00E+00	5.86E-06	1.16E-05	2.17E-02
Ba-141	4.95E-17	3.70E-20	1.65E-18	0.00E+00	3.43E-20	2.53E-20	1.06E-22
Ba-142	0.00E+00	0.00E+00	0.00E+00	0.00E+00	0.00E+00	0.00E+00	0.00E+00
La-140	1.44E-06	7.09E-07	1.89E-07	0.00E+00	0.00E+00	0.00E+00	4.07E-02
La-142	4.93E-10	2.19E-10	5.46E-11	0.00E+00	0.00E+00	0.00E+00	6.67E-06
Ce-141	6.71E-06	4.48E-06	5.15E-07	0.00E+00	2.11E-06	0.00E+00	1.28E-02
Ce-143	9.31E-07	6.78E-04	7.57E-08	0.00E+00	3.04E-07	0.00E+00	2.04E-02
Ce-144	3.55E-04	1.47E-04	1.91E-05	0.00E+00	8.76E-05	0.00E+00	8.91E-02
Pr-143	6.51E-06	2.60E-06	3.24E-07	0.00E+00	1.51E-06	0.00E+00	2.14E-02
Pr-144	6.66E-21	2.72E-21	3.37E-22	0.00E+00	1.56E-21	0.00E+00	7.34E-24
Nd-147	4.64E-06	5.04E-06	3.02E-07	0.00E+00	2.96E-06	0.00E+00	1.82E-02
W-187	5.25E-05	4.28E-05	1.50E-05	0.00E+00	0.00E+00	0.00E+00	1.16E-02
Np-239	7.75E-07	7.31E-08	4.06E-08	0.00E+00	2.29E-07	0.00E+00	1.18E-02

REMP DOSE FACTORS FOR TEEN AGE GROUP: INHALATION - QUARTERLY SAMPLING (Page 1 of 2)

mrem-m^3/pCi-yr

NUCLIDE	BONE	LIVER	T.BODY	THYROID	KIDNEY	LUNG	GI-LLI
H-3	0.00E+00	1.28E-03	1.28E-03	1.28E-03	1.28E-03	1.28E-03	1.28E-03
C-14	2.60E-02	4.87E-03	4.87E-03	4.87E-03	4.87E-03	4.87E-03	4.87E-03
Na-24	0.00E+00	0.00E+00	0.00E+00	0.00E+00	0.00E+00	0.00E+00	0.00E+00
P-32	1.73E+01	1.00E+00	6.55E-01	0.00E+00	0.00E+00	0.00E+00	8.49E-01
Cr-51	0.00E+00	0.00E+00	4.23E-04	2.35E-04	9.62E-05	6.56E-02	9.39E-03
Mn-54	0.00E+00	5.66E-02	9.29E-03	0.00E+00	1.41E-02	2.20E+00	7.39E-02
Mn-56	0.00E+00	0.00E+00	0.00E+00	0.00E+00	0.00E+00	0.00E+00	0.00E+00
Fe-55	3.45E-02	2.46E-02	5.72E-03	0.00E+00	0.00E+00	1.28E-01	6.60E-03
Fe-59	3.23E-02	7.51E-02	2.91E-02	0.00E+00	0.00E+00	3.10E+00	3.62E-01
Co-58	0.00E+00	3.24E-03	4.34E-03	0.00E+00	0.00E+00	2.10E+00	1.49E-01
Co-60	0.00E+00	1.54E-02	2.02E-02	0.00E+00	0.00E+00	8.86E+00	2.63E-01
Ni-63	5.81E-01	4.35E-02	1.98E-02	0.00E+00	0.00E+00	3.07E-01	1.42E-02
Ni-65	0.00E+00	0.00E+00	0.00E+00	0.00E+00	0.00E+00	0.00E+00	0.00E+00
Cu-64	0.00E+00	0.00E+00	0.00E+00	0.00E+00	0.00E+00	0.00E+00	0.00E+00
Zn-65	4.39E-02	1.52E-01	7.10E-02	0.00E+00	9.83E-02	1.41E+00	5.31E-02
Zn-69	0.00E+00	0.00E+00	0.00E+00	0.00E+00	0.00E+00	0.00E+00	0.00E+00
Br-83	0.00E+00	0.00E+00	0.00E+00	0.00E+00	0.00E+00	0.00E+00	0.00E+00
Br-84	0.00E+00	0.00E+00	0.00E+00	0.00E+00	0.00E+00	0.00E+00	0.00E+00
Br-85	0.00E+00	0.00E+00	0.00E+00	0.00E+00	0.00E+00	0.00E+00	0.00E+00
Rb-86	0.00E+00	1.04E+00	4.57E-01	0.00E+00	0.00E+00	0.00E+00	9.63E-02
Rb-88	0.00E+00	0.00E+00	0.00E+00	0.00E+00	0.00E+00	0.00E+00	0.00E+00
Rb-89	0.00E+00	0.00E+00	0.00E+00	0.00E+00	0.00E+00	0.00E+00	0.00E+00
Sr-89	8.12E-01	0.00E+00	2.33E-02	0.00E+00	0.00E+00	4.52E+00	6.94E-01
Sr-90	1.08E+02	0.00E+00	6.70E+00	0.00E+00	0.00E+00	1.65E+01	7.67E-01
Sr-91	0.00E+00	0.00E+00	0.00E+00	0.00E+00	0.00E+00	0.00E+00	0.00E+00
Sr-92	0.00E+00	0.00E+00	0.00E+00	0.00E+00	0.00E+00	0.00E+00	0.00E+00
Y-90	0.00E+00	0.00E+00	0.00E+00	0.00E+00	0.00E+00	0.00E+00	0.00E+00
Y-91m	0.00E+00	0.00E+00	0.00E+00	0.00E+00	0.00E+00	0.00E+00	0.00E+00
Y-91	1.13E+00	0.00E+00	3.04E-02	0.00E+00	0.00E+00	5.04E+00	7.02E-01
Y-92	0.00E+00	0.00E+00	0.00E+00	0.00E+00	0.00E+00	0.00E+00	0.00E+00
Y-93	0.00E+00	0.00E+00	0.00E+00	0.00E+00	0.00E+00	0.00E+00	0.00E+00
Zr-95	2.39E-01	7.51E-02	5.17E-02	0.00E+00	1.10E-01	4.41E+00	2.44E-01
Zr-97	0.00E+00	0.00E+00	0.00E+00	0.00E+00	0.00E+00	0.00E+00	0.00E+00
Nb-95	4.57E-02	2.54E-02	1.40E-02	0.00E+00	2.46E-02	1.85E+00	2.39E-01
Mo-99	0.00E+00	0.00E+00	0.00E+00	0.00E+00	0.00E+00	0.00E+00	0.00E+00
Tc-99m	0.00E+00	0.00E+00	0.00E+00	0.00E+00	0.00E+00	0.00E+00	0.00E+00

REMP DOSE FACTORS FOR TEEN AGE GROUP: INHALATION - QUARTERLY SAMPLING (Page 2 of 2)
mrem-m^3/pCi-yr

NUCLIDE	BONE	LIVER	T.BODY	THYROID	KIDNEY	LUNG	GI-LLI
Tc-101	0.00E+00	0.00E+00	0.00E+00	0.00E+00	0.00E+00	0.00E+00	0.00E+00
Ru-103	4.70E-03	0.00E+00	2.00E-03	0.00E+00	1.66E-02	1.75E+00	2.43E-01
Ru-105	0.00E+00	0.00E+00	0.00E+00	0.00E+00	0.00E+00	0.00E+00	0.00E+00
Ru-106	1.07E-01	0.00E+00	1.35E-02	0.00E+00	2.07E-01	1.75E+01	1.05E+00
Ag-110m	1.57E-02	1.49E-02	9.07E-03	0.00E+00	2.84E-02	7.66E+00	3.10E-01
Te-125m	8.42E-03	3.86E-03	1.15E-03	2.42E-03	0.00E+00	9.25E-01	1.29E-01
Te-127m	2.41E-02	1.09E-02	2.92E-03	5.86E-03	8.74E-02	2.21E+00	2.13E-01
Te-127	0.00E+00	0.00E+00	0.00E+00	0.00E+00	0.00E+00	0.00E+00	0.00E+00
Te-129m	3.57E-02	1.69E-02	5.76E-03	1.17E-02	1.33E-01	5.06E+00	1.04E+00
Te-129	1.82E-07	8.65E-08	4.51E-08	1.33E-07	6.81E-07	8.45E-03	4.14E-03
Te-131m	0.00E+00	0.00E+00	0.00E+00	0.00E+00	0.00E+00	0.00E+00	0.00E+00
Te-131	0.00E+00	0.00E+00	0.00E+00	0.00E+00	0.00E+00	0.00E+00	0.00E+00
Te-132	0.00E+00	0.00E+00	0.00E+00	0.00E+00	0.00E+00	0.00E+00	0.00E+00
I-130	0.00E+00	0.00E+00	0.00E+00	0.00E+00	0.00E+00	0.00E+00	0.00E+00
I-131	1.81E+00	2.51E+00	1.35E+00	7.48E+02	4.29E+00	0.00E+00	3.31E-01
I-132	0.00E+00	0.00E+00	0.00E+00	0.00E+00	0.00E+00	0.00E+00	0.00E+00
I-133	0.00E+00	0.00E+00	0.00E+00	0.00E+00	0.00E+00	0.00E+00	0.00E+00
I-134	0.00E+00	0.00E+00	0.00E+00	0.00E+00	0.00E+00	0.00E+00	0.00E+00
I-135	0.00E+00	0.00E+00	0.00E+00	0.00E+00	0.00E+00	0.00E+00	0.00E+00
Cs-134	5.24E-01	1.18E+00	5.72E-01	0.00E+00	3.91E-01	1.53E-01	1.02E-02
Cs-136	5.70E-01	2.14E+00	1.51E+00	0.00E+00	1.22E+00	1.96E-01	1.20E-01
Cs-137	6.72E-01	8.50E-01	3.12E-01	0.00E+00	3.05E-01	1.21E-01	8.50E-03
Cs-138	0.00E+00	0.00E+00	0.00E+00	0.00E+00	0.00E+00	0.00E+00	0.00E+00
Ba-139	0.00E+00	0.00E+00	0.00E+00	0.00E+00	0.00E+00	0.00E+00	0.00E+00
Ba-140	6.49E-01	7.95E-04	4.17E-02	0.00E+00	2.70E-04	2.41E+01	2.71E+00
Ba-141	0.00E+00	0.00E+00	0.00E+00	0.00E+00	0.00E+00	0.00E+00	0.00E+00
Ba-142	0.00E+00	0.00E+00	0.00E+00	0.00E+00	0.00E+00	0.00E+00	0.00E+00
La-140	0.00E+00	0.00E+00	0.00E+00	0.00E+00	0.00E+00	0.00E+00	0.00E+00
La-142	0.00E+00	0.00E+00	0.00E+00	0.00E+00	0.00E+00	0.00E+00	0.00E+00
Ce-141	7.51E-02	5.02E-02	5.74E-03	0.00E+00	2.35E-02	1.62E+00	3.34E-01
Ce-143	0.00E+00	0.00E+00	0.00E+00	0.00E+00	0.00E+00	0.00E+00	0.00E+00
Ce-144	5.46E+00	2.26E+00	2.93E-01	0.00E+00	1.35E+00	1.49E+01	9.66E-01
Pr-143	1.38E-01	5.47E-02	6.82E-03	0.00E+00	3.18E-02	4.98E+00	2.20E+00
Pr-144	0.00E+00	0.00E+00	0.00E+00	0.00E+00	0.00E+00	0.00E+00	0.00E+00
Nd-147	1.40E-01	1.53E-01	9.14E-03	0.00E+00	8.95E-02	6.63E+00	3.25E+00
W-187	0.00E+00	0.00E+00	0.00E+00	0.00E+00	0.00E+00	0.00E+00	0.00E+00
Np-239	0.00E+00	0.00E+00	0.00E+00	0.00E+00	0.00E+00	0.00E+00	0.00E+00

REMP DOSE FACTORS FOR TEEN AGE GROUP: INHALATION - WEEKLY SAMPLING (Page 1 of 2)
mrem-m^3/pCi-yr

NUCLIDE	BONE	LIVER	T.BODY	THYROID	KIDNEY	LUNG	GI-LLI
H-3	0.00E+00	1.27E-03	1.27E-03	1.27E-03	1.27E-03	1.27E-03	1.27E-03
C-14	2.60E-02	4.87E-03	4.87E-03	4.87E-03	4.87E-03	4.87E-03	4.87E-03
Na-24	0.00E+00	0.00E+00	0.00E+00	0.00E+00	0.00E+00	0.00E+00	0.00E+00
P-32	2.24E+00	1.30E-01	8.48E-02	0.00E+00	0.00E+00	0.00E+00	1.10E-01
Cr-51	0.00E+00	0.00E+00	1.48E-04	8.18E-05	3.35E-05	2.29E-02	3.27E-03
Mn-54	0.00E+00	5.15E-02	8.47E-03	0.00E+00	1.28E-02	2.00E+00	6.73E-02
Mn-56	0.00E+00	0.00E+00	0.00E+00	0.00E+00	0.00E+00	0.00E+00	0.00E+00
Fe-55	3.35E-02	2.39E-02	5.56E-03	0.00E+00	0.00E+00	1.24E-01	6.41E-03
Fe-59	1.68E-02	3.90E-02	1.51E-02	0.00E+00	0.00E+00	1.61E+00	1.88E-01
Co-58	0.00E+00	2.14E-03	2.87E-03	0.00E+00	0.00E+00	1.39E+00	9.85E-02
Co-60	0.00E+00	1.51E-02	1.99E-02	0.00E+00	0.00E+00	8.73E+00	2.60E-01
Ni-63	5.80E-01	4.34E-02	1.98E-02	0.00E+00	0.00E+00	3.07E-01	1.42E-02
Ni-65	0.00E+00	0.00E+00	0.00E+00	0.00E+00	0.00E+00	0.00E+00	0.00E+00
Cu-64	0.00E+00	0.00E+00	0.00E+00	0.00E+00	0.00E+00	0.00E+00	0.00E+00
Zn-65	3.89E-02	1.35E-01	6.30E-02	0.00E+00	8.73E-02	1.25E+00	4.71E-02
Zn-69	0.00E+00	0.00E+00	0.00E+00	0.00E+00	0.00E+00	0.00E+00	0.00E+00
Br-83	0.00E+00	0.00E+00	0.00E+00	0.00E+00	0.00E+00	0.00E+00	0.00E+00
Br-84	0.00E+00	0.00E+00	0.00E+00	0.00E+00	0.00E+00	0.00E+00	0.00E+00
Br-85	0.00E+00	0.00E+00	0.00E+00	0.00E+00	0.00E+00	0.00E+00	0.00E+00
Rb-86	0.00E+00	2.17E-01	9.57E-02	0.00E+00	0.00E+00	0.00E+00	2.01E-02
Rb-88	0.00E+00	0.00E+00	0.00E+00	0.00E+00	0.00E+00	0.00E+00	0.00E+00
Rb-89	0.00E+00	0.00E+00	0.00E+00	0.00E+00	0.00E+00	0.00E+00	0.00E+00
Sr-89	4.56E-01	0.00E+00	1.31E-02	0.00E+00	0.00E+00	2.53E+00	3.89E-01
Sr-90	1.08E+02	0.00E+00	6.68E+00	0.00E+00	0.00E+00	1.65E+01	7.65E-01
Sr-91	0.00E+00	0.00E+00	0.00E+00	0.00E+00	0.00E+00	0.00E+00	0.00E+00
Sr-92	0.00E+00	0.00E+00	0.00E+00	0.00E+00	0.00E+00	0.00E+00	0.00E+00
Y-90	0.00E+00	0.00E+00	0.00E+00	0.00E+00	0.00E+00	0.00E+00	0.00E+00
Y-91m	0.00E+00	0.00E+00	0.00E+00	0.00E+00	0.00E+00	0.00E+00	0.00E+00
Y-91	6.89E-01	0.00E+00	1.84E-02	0.00E+00	0.00E+00	3.06E+00	4.26E-01
Y-92	0.00E+00	0.00E+00	0.00E+00	0.00E+00	0.00E+00	0.00E+00	0.00E+00
Y-93	0.00E+00	0.00E+00	0.00E+00	0.00E+00	0.00E+00	0.00E+00	0.00E+00
Zr-95	1.51E-01	4.76E-02	3.27E-02	0.00E+00	7.00E-02	2.79E+00	1.55E-01
Zr-97	0.00E+00	0.00E+00	0.00E+00	0.00E+00	0.00E+00	0.00E+00	0.00E+00
Nb-95	1.99E-02	1.11E-02	6.07E-03	0.00E+00	1.07E-02	8.05E-01	1.04E-01
Mo-99	0.00E+00	0.00E+00	0.00E+00	0.00E+00	0.00E+00	0.00E+00	0.00E+00
Tc-99m	0.00E+00	0.00E+00	0.00E+00	0.00E+00	0.00E+00	0.00E+00	0.00E+00

REMP DOSE FACTORS FOR TEEN AGE GROUP:INHALATION - WEEKLY SAMPLING (Page 2 of 2)

mrem-m^3/pCi-yr

NUCLIDE	BONE	LIVER	T.BODY	THYROID	KIDNEY	LUNG	GI-LLI
Tc-101	0.00E+00	0.00E+00	0.00E+00	0.00E+00	0.00E+00	0.00E+00	0.00E+00
Ru-103	2.24E-03	0.00E+00	9.53E-04	0.00E+00	7.90E-03	8.33E-01	1.16E-01
Ru-105	0.00E+00	0.00E+00	0.00E+00	0.00E+00	0.00E+00	0.00E+00	0.00E+00
Ru-106	9.91E-02	0.00E+00	1.25E-02	0.00E+00	1.92E-01	1.62E+01	9.66E-01
Ag-110m	1.40E-02	1.32E-02	8.07E-03	0.00E+00	2.53E-02	6.82E+00	2.75E-01
Te-125m	5.09E-03	2.34E-03	6.96E-04	1.46E-03	0.00E+00	5.59E-01	7.82E-02
Te-127m	1.84E-02	8.34E-03	2.23E-03	4.48E-03	6.68E-02	1.69E+00	1.63E-01
Te-127	0.00E+00	0.00E+00	0.00E+00	0.00E+00	0.00E+00	0.00E+00	0.00E+00
Te-129m	1.50E-02	7.08E-03	2.42E-03	4.92E-03	5.58E-02	2.12E+00	4.35E-01
Te-129	7.63E-08	3.63E-08	1.89E-08	5.57E-08	2.85E-07	3.54E-03	1.74E-03
Te-131m	0.00E+00	0.00E+00	0.00E+00	0.00E+00	0.00E+00	0.00E+00	0.00E+00
Te-131	0.00E+00	0.00E+00	0.00E+00	0.00E+00	0.00E+00	0.00E+00	0.00E+00
Te-132	0.00E+00	0.00E+00	0.00E+00	0.00E+00	0.00E+00	0.00E+00	0.00E+00
I-130	0.00E+00	0.00E+00	0.00E+00	0.00E+00	0.00E+00	0.00E+00	0.00E+00
I-131	3.54E-02	4.91E-02	2.64E-02	1.46E+01	8.40E-02	0.00E+00	6.49E-03
I-132	0.00E+00	0.00E+00	0.00E+00	0.00E+00	0.00E+00	0.00E+00	0.00E+00
I-133	0.00E+00	0.00E+00	0.00E+00	0.00E+00	0.00E+00	0.00E+00	0.00E+00
I-134	0.00E+00	0.00E+00	0.00E+00	0.00E+00	0.00E+00	0.00E+00	0.00E+00
I-135	0.00E+00	0.00E+00	0.00E+00	0.00E+00	0.00E+00	0.00E+00	0.00E+00
Cs-134	5.04E-01	1.13E+00	5.51E-01	0.00E+00	3.76E-01	1.47E-01	9.79E-03
Cs-136	6.19E-02	2.33E-01	1.64E-01	0.00E+00	1.33E-01	2.14E-02	1.31E-02
Cs-137	6.71E-01	8.48E-01	3.11E-01	0.00E+00	3.04E-01	1.21E-01	8.48E-03
Cs-138	0.00E+00	0.00E+00	0.00E+00	0.00E+00	0.00E+00	0.00E+00	0.00E+00
Ba-139	0.00E+00	0.00E+00	0.00E+00	0.00E+00	0.00E+00	0.00E+00	0.00E+00
Ba-140	6.61E-02	8.10E-05	4.26E-03	0.00E+00	2.76E-05	2.46E+00	2.77E-01
Ba-141	0.00E+00	0.00E+00	0.00E+00	0.00E+00	0.00E+00	0.00E+00	0.00E+00
Ba-142	0.00E+00	0.00E+00	0.00E+00	0.00E+00	0.00E+00	0.00E+00	0.00E+00
La-140	0.00E+00	0.00E+00	0.00E+00	0.00E+00	0.00E+00	0.00E+00	0.00E+00
La-142	0.00E+00	0.00E+00	0.00E+00	0.00E+00	0.00E+00	0.00E+00	0.00E+00
Ce-141	3.06E-02	2.04E-02	2.34E-03	0.00E+00	9.57E-03	6.61E-01	1.36E-01
Ce-143	0.00E+00	0.00E+00	0.00E+00	0.00E+00	0.00E+00	0.00E+00	0.00E+00
Ce-144	4.93E+00	2.04E+00	2.65E-01	0.00E+00	1.22E+00	1.35E+01	8.71E-01
Pr-143	1.60E-02	6.35E-03	7.92E-04	0.00E+00	3.69E-03	5.78E-01	2.55E-01
Pr-144	0.00E+00	0.00E+00	0.00E+00	0.00E+00	0.00E+00	0.00E+00	0.00E+00
Nd-147	9.81E-03	1.07E-02	6.40E-04	0.00E+00	6.27E-03	4.64E-01	2.28E-01
W-187	0.00E+00	0.00E+00	0.00E+00	0.00E+00	0.00E+00	0.00E+00	0.00E+00
Np-239	0.00E+00	0.00E+00	0.00E+00	0.00E+00	0.00E+00	0.00E+00	0.00E+00

REMP DOSE FACTORS FOR CHILD AGE GROUP: MILK (Page 1 of 2)

mrem-liter/pCi-yr

NUCLIDE	BONE	LIVER	T.BODY	THYROID	KIDNEY	LUNG	GI-LLI
H-3	0.00E+00	6.70E-05	6.70E-05	6.70E-05	6.70E-05	6.70E-05	6.70E-05
C-14	3.99E-03	7.99E-04	7.99E-04	7.99E-04	7.99E-04	7.99E-04	7.99E-04
Na-24	0.00E+00	0.00E+00	0.00E+00	0.00E+00	0.00E+00	0.00E+00	0.00E+00
P-32	2.47E-01	1.16E-02	9.52E-03	0.00E+00	0.00E+00	0.00E+00	6.83E-03
Cr-51	0.00E+00	0.00E+00	2.79E-06	1.55E-06	4.24E-07	2.83E-06	1.48E-04
Mn-54	0.00E+00	3.52E-03	9.36E-04	0.00E+00	9.86E-04	0.00E+00	2.95E-03
Mn-56	0.00E+00	0.00E+00	0.00E+00	0.00E+00	0.00E+00	0.00E+00	0.00E+00
Fe-55	3.79E-03	2.01E-03	6.23E-04	0.00E+00	0.00E+00	1.14E-03	3.72E-04
Fe-59	5.28E-03	8.54E-03	4.25E-03	0.00E+00	0.00E+00	2.48E-03	8.89E-03
Co-58	0.00E+00	5.82E-04	1.78E-03	0.00E+00	0.00E+00	0.00E+00	3.40E-03
Co-60	0.00E+00	1.74E-03	5.14E-03	0.00E+00	0.00E+00	0.00E+00	9.66E-03
Ni-63	1.78E-01	9.50E-03	6.04E-03	0.00E+00	0.00E+00	0.00E+00	6.40E-04
Ni-65	0.00E+00	0.00E+00	0.00E+00	0.00E+00	0.00E+00	0.00E+00	0.00E+00
Cu-64	0.00E+00	0.00E+00	0.00E+00	0.00E+00	0.00E+00	0.00E+00	0.00E+00
Zn-65	4.50E-03	1.20E-02	7.45E-03	0.00E+00	7.55E-03	0.00E+00	2.10E-03
Zn-69	0.00E+00	0.00E+00	0.00E+00	0.00E+00	0.00E+00	0.00E+00	0.00E+00
Br-83	0.00E+00	0.00E+00	0.00E+00	0.00E+00	0.00E+00	0.00E+00	0.00E+00
Br-84	0.00E+00	0.00E+00	0.00E+00	0.00E+00	0.00E+00	0.00E+00	0.00E+00
Br-85	0.00E+00	0.00E+00	0.00E+00	0.00E+00	0.00E+00	0.00E+00	0.00E+00
Rb-86	0.00E+00	2.05E-02	1.26E-02	0.00E+00	0.00E+00	0.00E+00	1.32E-03
Rb-88	0.00E+00	0.00E+00	0.00E+00	0.00E+00	0.00E+00	0.00E+00	0.00E+00
Rb-89	0.00E+00	0.00E+00	0.00E+00	0.00E+00	0.00E+00	0.00E+00	0.00E+00
Sr-89	4.24E-01	0.00E+00	1.21E-02	0.00E+00	0.00E+00	0.00E+00	1.64E-02
Sr-90	5.61E+00	0.00E+00	1.42E+00	0.00E+00	0.00E+00	0.00E+00	7.56E-02
Sr-91	0.00E+00	0.00E+00	0.00E+00	0.00E+00	0.00E+00	0.00E+00	0.00E+00
Sr-92	0.00E+00	0.00E+00	0.00E+00	0.00E+00	0.00E+00	0.00E+00	0.00E+00
Y-90	0.00E+00	0.00E+00	0.00E+00	0.00E+00	0.00E+00	0.00E+00	0.00E+00
Y-91m	0.00E+00	0.00E+00	0.00E+00	0.00E+00	0.00E+00	0.00E+00	0.00E+00
Y-91	1.94E-04	0.00E+00	5.19E-06	0.00E+00	0.00E+00	0.00E+00	2.58E-02
Y-92	0.00E+00	0.00E+00	0.00E+00	0.00E+00	0.00E+00	0.00E+00	0.00E+00
Y-93	0.00E+00	0.00E+00	0.00E+00	0.00E+00	0.00E+00	0.00E+00	0.00E+00
Zr-95	3.75E-05	8.23E-06	7.33E-06	0.00E+00	1.18E-05	0.00E+00	8.59E-03
Zr-97	0.00E+00	0.00E+00	0.00E+00	0.00E+00	0.00E+00	0.00E+00	0.00E+00
Nb-95	7.14E-06	2.78E-06	1.99E-06	0.00E+00	2.61E-06	0.00E+00	5.14E-03
Mo-99	0.00E+00	0.00E+00	0.00E+00	0.00E+00	0.00E+00	0.00E+00	0.00E+00
Tc-99m	0.00E+00	0.00E+00	0.00E+00	0.00E+00	0.00E+00	0.00E+00	0.00E+00

REMP DOSE FACTORS FOR CHILD AGE GROUP: MILK (Page 2 of 2)

mrem-liter/pCi-yr

NUCLIDE	BONE	LIVER	T.BODY	THYROID	KIDNEY	LUNG	GI-LLI
Tc-101	0.00E+00	0.00E+00	0.00E+00	0.00E+00	0.00E+00	0.00E+00	0.00E+00
Ru-103	2.33E-04	0.00E+00	8.95E-05	0.00E+00	5.86E-04	0.00E+00	6.02E-03
Ru-105	0.00E+00	0.00E+00	0.00E+00	0.00E+00	0.00E+00	0.00E+00	0.00E+00
Ru-106	3.85E-03	0.00E+00	4.80E-04	0.00E+00	5.19E-03	0.00E+00	5.98E-02
Ag-110m	1.77E-04	1.19E-04	9.55E-05	0.00E+00	2.23E-04	0.00E+00	1.42E-02
Te-125m	3.67E-03	9.96E-04	4.90E-04	1.03E-03	0.00E+00	0.00E+00	3.54E-03
Te-127m	9.42E-03	2.53E-03	1.12E-03	2.25E-03	2.68E-02	0.00E+00	7.62E-03
Te-127	0.00E+00	0.00E+00	0.00E+00	0.00E+00	0.00E+00	0.00E+00	0.00E+00
Te-129m	1.54E-02	4.31E-03	2.39E-03	4.97E-03	4.53E-02	0.00E+00	1.88E-02
Te-129	4.24E-05	1.18E-05	1.01E-05	3.03E-05	1.24E-04	0.00E+00	2.64E-03
Te-131m	0.00E+00	0.00E+00	0.00E+00	0.00E+00	0.00E+00	0.00E+00	0.00E+00
Te-131	0.00E+00	0.00E+00	0.00E+00	0.00E+00	0.00E+00	0.00E+00	0.00E+00
Te-132	0.00E+00	0.00E+00	0.00E+00	0.00E+00	0.00E+00	0.00E+00	0.00E+00
I-130	0.00E+00	0.00E+00	0.00E+00	0.00E+00	0.00E+00	0.00E+00	0.00E+00
I-131	4.78E-03	4.80E-03	2.73E-03	1.59E+00	7.89E-03	0.00E+00	4.28E-04
I-132	0.00E+00	0.00E+00	0.00E+00	0.00E+00	0.00E+00	0.00E+00	0.00E+00
I-133	0.00E+00	0.00E+00	0.00E+00	0.00E+00	0.00E+00	0.00E+00	0.00E+00
I-134	0.00E+00	0.00E+00	0.00E+00	0.00E+00	0.00E+00	0.00E+00	0.00E+00
I-135	0.00E+00	0.00E+00	0.00E+00	0.00E+00	0.00E+00	0.00E+00	0.00E+00
Cs-134	7.71E-02	1.26E-01	2.67E-02	0.00E+00	3.92E-02	1.41E-02	6.82E-04
Cs-136	6.98E-03	1.92E-02	1.24E-02	0.00E+00	1.02E-02	1.52E-03	6.74E-04
Cs-137	1.08E-01	1.03E-01	1.52E-02	0.00E+00	3.37E-02	1.21E-02	6.47E-04
Cs-138	0.00E+00	0.00E+00	0.00E+00	0.00E+00	0.00E+00	0.00E+00	0.00E+00
Ba-139	0.00E+00	0.00E+00	0.00E+00	0.00E+00	0.00E+00	0.00E+00	0.00E+00
Ba-140	2.46E-02	2.16E-05	1.44E-03	0.00E+00	7.02E-06	1.29E-05	1.25E-02
Ba-141	0.00E+00	0.00E+00	0.00E+00	0.00E+00	0.00E+00	0.00E+00	0.00E+00
Ba-142	0.00E+00	0.00E+00	0.00E+00	0.00E+00	0.00E+00	0.00E+00	0.00E+00
La-140	0.00E+00	0.00E+00	0.00E+00	0.00E+00	0.00E+00	0.00E+00	0.00E+00
La-142	0.00E+00	0.00E+00	0.00E+00	0.00E+00	0.00E+00	0.00E+00	0.00E+00
Ce-141	1.26E-05	6.26E-06	9.30E-07	0.00E+00	2.74E-06	0.00E+00	7.81E-03
Ce-143	0.00E+00	0.00E+00	0.00E+00	0.00E+00	0.00E+00	0.00E+00	0.00E+00
Ce-144	6.83E-04	2.14E-04	3.65E-05	0.00E+00	1.19E-04	0.00E+00	5.58E-02
Pr-143	1.17E-05	3.52E-06	5.81E-07	0.00E+00	1.90E-06	0.00E+00	1.26E-02
Pr-144	0.00E+00	0.00E+00	0.00E+00	0.00E+00	0.00E+00	0.00E+00	0.00E+00
Nd-147	8.11E-06	6.57E-06	5.09E-07	0.00E+00	3.61E-06	0.00E+00	1.04E-02
W-187	0.00E+00	0.00E+00	0.00E+00	0.00E+00	0.00E+00	0.00E+00	0.00E+00
Np-239	0.00E+00	0.00E+00	0.00E+00	0.00E+00	0.00E+00	0.00E+00	0.00E+00

REMP DOSE FACTORS FOR CHILD AGE GROUP: LEAFY VEG. (Page 1 of 2)

mrem-kg/pCi-yr

NUCLIDE	BONE	LIVER	T.BODY	THYROID	KIDNEY	LUNG	GI-LLI
H-3	0.00E+00	5.28E-06	5.28E-06	5.28E-06	5.28E-06	5.28E-06	5.28E-06
C-14	3.15E-04	6.29E-05	6.29E-05	6.29E-05	6.29E-05	6.29E-05	6.29E-05
Na-24	0.00E+00	0.00E+00	0.00E+00	0.00E+00	0.00E+00	0.00E+00	0.00E+00
P-32	2.04E-02	9.56E-04	7.88E-04	0.00E+00	0.00E+00	0.00E+00	5.65E-04
Cr-51	0.00E+00	0.00E+00	2.26E-07	1.25E-07	3.42E-08	2.29E-07	1.20E-05
Mn-54	0.00E+00	2.78E-04	7.39E-05	0.00E+00	7.78E-05	0.00E+00	2.33E-04
Mn-56	0.00E+00	0.00E+00	0.00E+00	0.00E+00	0.00E+00	0.00E+00	0.00E+00
Fe-55	2.99E-04	1.58E-04	4.91E-05	0.00E+00	0.00E+00	8.96E-05	2.94E-05
Fe-59	4.22E-04	6.84E-04	3.40E-04	0.00E+00	0.00E+00	1.98E-04	7.12E-04
Co-58	0.00E+00	4.63E-05	1.42E-04	0.00E+00	0.00E+00	0.00E+00	2.70E-04
Co-60	0.00E+00	1.37E-04	4.05E-04	0.00E+00	0.00E+00	0.00E+00	7.62E-04
Ni-63	1.40E-02	7.49E-04	4.76E-04	0.00E+00	0.00E+00	0.00E+00	5.04E-05
Ni-65	0.00E+00	0.00E+00	0.00E+00	0.00E+00	0.00E+00	0.00E+00	0.00E+00
Cu-64	0.00E+00	0.00E+00	0.00E+00	0.00E+00	0.00E+00	0.00E+00	0.00E+00
Zn-65	3.55E-04	9.46E-04	5.89E-04	0.00E+00	5.96E-04	0.00E+00	1.66E-04
Zn-69	0.00E+00	0.00E+00	0.00E+00	0.00E+00	0.00E+00	0.00E+00	0.00E+00
Br-83	0.00E+00	0.00E+00	0.00E+00	0.00E+00	0.00E+00	0.00E+00	0.00E+00
Br-84	0.00E+00	0.00E+00	0.00E+00	0.00E+00	0.00E+00	0.00E+00	0.00E+00
Br-85	0.00E+00	0.00E+00	0.00E+00	0.00E+00	0.00E+00	0.00E+00	0.00E+00
Rb-86	0.00E+00	1.68E-03	1.03E-03	0.00E+00	0.00E+00	0.00E+00	1.08E-04
Rb-88	0.00E+00	0.00E+00	0.00E+00	0.00E+00	0.00E+00	0.00E+00	0.00E+00
Rb-89	0.00E+00	0.00E+00	0.00E+00	0.00E+00	0.00E+00	0.00E+00	0.00E+00
Sr-89	3.39E-02	0.00E+00	9.67E-04	0.00E+00	0.00E+00	0.00E+00	1.31E-03
Sr-90	4.42E-01	0.00E+00	1.12E-01	0.00E+00	0.00E+00	0.00E+00	5.95E-03
Sr-91	0.00E+00	0.00E+00	0.00E+00	0.00E+00	0.00E+00	0.00E+00	0.00E+00
Sr-92	0.00E+00	0.00E+00	0.00E+00	0.00E+00	0.00E+00	0.00E+00	0.00E+00
Y-90	0.00E+00	0.00E+00	0.00E+00	0.00E+00	0.00E+00	0.00E+00	0.00E+00
Y-91m	0.00E+00	0.00E+00	0.00E+00	0.00E+00	0.00E+00	0.00E+00	0.00E+00
Y-91	1.55E-05	0.00E+00	4.14E-07	0.00E+00	0.00E+00	0.00E+00	2.06E-03
Y-92	0.00E+00	0.00E+00	0.00E+00	0.00E+00	0.00E+00	0.00E+00	0.00E+00
Y-93	0.00E+00	0.00E+00	0.00E+00	0.00E+00	0.00E+00	0.00E+00	0.00E+00
Zr-95	2.98E-06	6.56E-07	5.84E-07	0.00E+00	9.39E-07	0.00E+00	6.84E-04
Zr-97	0.00E+00	0.00E+00	0.00E+00	0.00E+00	0.00E+00	0.00E+00	0.00E+00
Nb-95	5.74E-07	2.23E-07	1.60E-07	0.00E+00	2.10E-07	0.00E+00	4.13E-04
Mo-99	0.00E+00	0.00E+00	0.00E+00	0.00E+00	0.00E+00	0.00E+00	0.00E+00
Tc-99m	0.00E+00	0.00E+00	0.00E+00	0.00E+00	0.00E+00	0.00E+00	0.00E+00

REMP DOSE FACTORS FOR CHILD AGE GROUP: LEAFY VEG. (Page 2 of 2)

mrem-kg/pCi-yr

NUCLIDE	BONE	LIVER	T.BODY	THYROID	KIDNEY	LUNG	GI-LLI
Tc-101	0.00E+00	0.00E+00	0.00E+00	0.00E+00	0.00E+00	0.00E+00	0.00E+00
Ru-103	1.87E-05	0.00E+00	7.18E-06	0.00E+00	4.70E-05	0.00E+00	4.83E-04
Ru-105	0.00E+00	0.00E+00	0.00E+00	0.00E+00	0.00E+00	0.00E+00	0.00E+00
Ru-106	3.04E-04	0.00E+00	3.79E-05	0.00E+00	4.10E-04	0.00E+00	4.72E-03
Ag-110m	1.40E-05	9.44E-06	7.55E-06	0.00E+00	1.76E-05	0.00E+00	1.12E-03
Te-125m	2.93E-04	7.94E-05	3.91E-05	8.22E-05	0.00E+00	0.00E+00	2.83E-04
Te-127m	7.47E-04	2.01E-04	8.86E-05	1.79E-04	2.13E-03	0.00E+00	6.05E-04
Te-127	0.00E+00	0.00E+00	0.00E+00	0.00E+00	0.00E+00	0.00E+00	0.00E+00
Te-129m	1.24E-03	3.46E-04	1.93E-04	4.00E-04	3.64E-03	0.00E+00	1.51E-03
Te-129	3.41E-06	9.53E-07	8.10E-07	2.43E-06	9.98E-06	0.00E+00	2.12E-04
Te-131m	0.00E+00	0.00E+00	0.00E+00	0.00E+00	0.00E+00	0.00E+00	0.00E+00
Te-131	0.00E+00	0.00E+00	0.00E+00	0.00E+00	0.00E+00	0.00E+00	0.00E+00
Te-132	0.00E+00	0.00E+00	0.00E+00	0.00E+00	0.00E+00	0.00E+00	0.00E+00
I-130	0.00E+00	0.00E+00	0.00E+00	0.00E+00	0.00E+00	0.00E+00	0.00E+00
I-131	4.10E-04	4.13E-04	2.34E-04	1.36E-01	6.77E-04	0.00E+00	3.67E-05
I-132	0.00E+00	0.00E+00	0.00E+00	0.00E+00	0.00E+00	0.00E+00	0.00E+00
I-133	0.00E+00	0.00E+00	0.00E+00	0.00E+00	0.00E+00	0.00E+00	0.00E+00
I-134	0.00E+00	0.00E+00	0.00E+00	0.00E+00	0.00E+00	0.00E+00	0.00E+00
I-135	0.00E+00	0.00E+00	0.00E+00	0.00E+00	0.00E+00	0.00E+00	0.00E+00
Cs-134	6.08E-03	9.97E-03	2.10E-03	0.00E+00	3.09E-03	1.11E-03	5.38E-05
Cs-136	5.80E-04	1.59E-03	1.03E-03	0.00E+00	8.49E-04	1.27E-04	5.60E-05
Cs-137	8.50E-03	8.14E-03	1.20E-03	0.00E+00	2.65E-03	9.54E-04	5.10E-05
Cs-138	0.00E+00	0.00E+00	0.00E+00	0.00E+00	0.00E+00	0.00E+00	0.00E+00
Ba-139	0.00E+00	0.00E+00	0.00E+00	0.00E+00	0.00E+00	0.00E+00	0.00E+00
Ba-140	2.05E-03	1.79E-06	1.19E-04	0.00E+00	5.84E-07	1.07E-06	1.04E-03
Ba-141	0.00E+00	0.00E+00	0.00E+00	0.00E+00	0.00E+00	0.00E+00	0.00E+00
Ba-142	0.00E+00	0.00E+00	0.00E+00	0.00E+00	0.00E+00	0.00E+00	0.00E+00
La-140	0.00E+00	0.00E+00	0.00E+00	0.00E+00	0.00E+00	0.00E+00	0.00E+00
La-142	0.00E+00	0.00E+00	0.00E+00	0.00E+00	0.00E+00	0.00E+00	0.00E+00
Ce-141	1.01E-06	5.04E-07	7.48E-08	0.00E+00	2.21E-07	0.00E+00	6.29E-04
Ce-143	0.00E+00	0.00E+00	0.00E+00	0.00E+00	0.00E+00	0.00E+00	0.00E+00
Ce-144	5.39E-05	1.69E-05	2.88E-06	0.00E+00	9.36E-06	0.00E+00	4.41E-03
Pr-143	9.71E-07	2.92E-07	4.82E-08	0.00E+00	1.58E-07	0.00E+00	1.05E-03
Pr-144	0.00E+00	0.00E+00	0.00E+00	0.00E+00	0.00E+00	0.00E+00	0.00E+00
Nd-147	6.81E-07	5.52E-07	4.27E-08	0.00E+00	3.03E-07	0.00E+00	8.74E-04
W-187	0.00E+00	0.00E+00	0.00E+00	0.00E+00	0.00E+00	0.00E+00	0.00E+00
Np-239	0.00E+00	0.00E+00	0.00E+00	0.00E+00	0.00E+00	0.00E+00	0.00E+00

REMP DOSE FACTORS FOR CHILD AGE GROUP: FRUIT (Page 1 of 2)
mrem-kg/pCi-yr

NUCLIDE	BONE	LIVER	T.BODY	THYROID	KIDNEY	LUNG	GI-LLI
H-3	0.00E+00	1.05E-04	1.05E-04	1.05E-04	1.05E-04	1.05E-04	1.05E-04
C-14	6.29E-03	1.26E-03	1.26E-03	1.26E-03	1.26E-03	1.26E-03	1.26E-03
Na-24	0.00E+00	0.00E+00	0.00E+00	0.00E+00	0.00E+00	0.00E+00	0.00E+00
P-32	2.34E-02	1.09E-03	9.00E-04	0.00E+00	0.00E+00	0.00E+00	6.46E-04
Cr-51	0.00E+00	0.00E+00	1.03E-06	5.72E-07	1.56E-07	1.05E-06	5.47E-05
Mn-54	0.00E+00	4.87E-03	1.30E-03	0.00E+00	1.37E-03	0.00E+00	4.09E-03
Mn-56	0.00E+00	0.00E+00	0.00E+00	0.00E+00	0.00E+00	0.00E+00	0.00E+00
Fe-55	5.73E-03	3.04E-03	9.42E-04	0.00E+00	0.00E+00	1.72E-03	5.63E-04
Fe-59	3.38E-03	5.47E-03	2.72E-03	0.00E+00	0.00E+00	1.59E-03	5.69E-03
Co-58	0.00E+00	5.20E-04	1.59E-03	0.00E+00	0.00E+00	0.00E+00	3.03E-03
Co-60	0.00E+00	2.69E-03	7.94E-03	0.00E+00	0.00E+00	0.00E+00	1.49E-02
Ni-63	2.79E-01	1.50E-02	9.51E-03	0.00E+00	0.00E+00	0.00E+00	1.01E-03
Ni-65	0.00E+00	0.00E+00	0.00E+00	0.00E+00	0.00E+00	0.00E+00	0.00E+00
Cu-64	0.00E+00	0.00E+00	0.00E+00	0.00E+00	0.00E+00	0.00E+00	0.00E+00
Zn-65	6.01E-03	1.60E-02	9.96E-03	0.00E+00	1.01E-02	0.00E+00	2.81E-03
Zn-69	0.00E+00	0.00E+00	0.00E+00	0.00E+00	0.00E+00	0.00E+00	0.00E+00
Br-83	0.00E+00	0.00E+00	0.00E+00	0.00E+00	0.00E+00	0.00E+00	0.00E+00
Br-84	0.00E+00	0.00E+00	0.00E+00	0.00E+00	0.00E+00	0.00E+00	0.00E+00
Br-85	0.00E+00	0.00E+00	0.00E+00	0.00E+00	0.00E+00	0.00E+00	0.00E+00
Rb-86	0.00E+00	3.75E-03	2.31E-03	0.00E+00	0.00E+00	0.00E+00	2.41E-04
Rb-88	0.00E+00	0.00E+00	0.00E+00	0.00E+00	0.00E+00	0.00E+00	0.00E+00
Rb-89	0.00E+00	0.00E+00	0.00E+00	0.00E+00	0.00E+00	0.00E+00	0.00E+00
Sr-89	3.01E-01	0.00E+00	8.61E-03	0.00E+00	0.00E+00	0.00E+00	1.17E-02
Sr-90	8.80E+00	0.00E+00	2.23E+00	0.00E+00	0.00E+00	0.00E+00	1.19E-01
Sr-91	0.00E+00	0.00E+00	0.00E+00	0.00E+00	0.00E+00	0.00E+00	0.00E+00
Sr-92	0.00E+00	0.00E+00	0.00E+00	0.00E+00	0.00E+00	0.00E+00	0.00E+00
Y-90	0.00E+00	0.00E+00	0.00E+00	0.00E+00	0.00E+00	0.00E+00	0.00E+00
Y-91m	0.00E+00	0.00E+00	0.00E+00	0.00E+00	0.00E+00	0.00E+00	0.00E+00
Y-91	1.54E-04	0.00E+00	4.11E-06	0.00E+00	0.00E+00	0.00E+00	2.05E-02
Y-92	0.00E+00	0.00E+00	0.00E+00	0.00E+00	0.00E+00	0.00E+00	0.00E+00
Y-93	0.00E+00	0.00E+00	0.00E+00	0.00E+00	0.00E+00	0.00E+00	0.00E+00
Zr-95	3.15E-05	6.92E-06	6.16E-06	0.00E+00	9.91E-06	0.00E+00	7.22E-03
Zr-97	0.00E+00	0.00E+00	0.00E+00	0.00E+00	0.00E+00	0.00E+00	0.00E+00
Nb-95	3.57E-06	1.39E-06	9.94E-07	0.00E+00	1.31E-06	0.00E+00	2.57E-03
Mo-99	0.00E+00	0.00E+00	0.00E+00	0.00E+00	0.00E+00	0.00E+00	0.00E+00
Tc-99m	0.00E+00	0.00E+00	0.00E+00	0.00E+00	0.00E+00	0.00E+00	0.00E+00

REMP DOSE FACTORS FOR CHILD AGE GROUP: FRUIT (Page 2 of 2)

mrem-kg/pCi-yr

NUCLIDE	BONE	LIVER	T.BODY	THYROID	KIDNEY	LUNG	GI-LLI
Tc-101	0.00E+00	0.00E+00	0.00E+00	0.00E+00	0.00E+00	0.00E+00	0.00E+00
Ru-103	1.32E-04	0.00E+00	5.08E-05	0.00E+00	3.33E-04	0.00E+00	3.42E-03
Ru-105	0.00E+00	0.00E+00	0.00E+00	0.00E+00	0.00E+00	0.00E+00	0.00E+00
Ru-106	5.43E-03	0.00E+00	6.78E-04	0.00E+00	7.34E-03	0.00E+00	8.45E-02
Ag-110m	2.37E-04	1.60E-04	1.28E-04	0.00E+00	2.98E-04	0.00E+00	1.91E-02
Te-125m	2.89E-03	7.84E-04	3.86E-04	8.12E-04	0.00E+00	0.00E+00	2.79E-03
Te-127m	1.03E-02	2.76E-03	1.22E-03	2.45E-03	2.93E-02	0.00E+00	8.31E-03
Te-127	0.00E+00	0.00E+00	0.00E+00	0.00E+00	0.00E+00	0.00E+00	0.00E+00
Te-129m	7.34E-03	2.05E-03	1.14E-03	2.37E-03	2.16E-02	0.00E+00	8.96E-03
Te-129	2.02E-05	5.64E-06	4.80E-06	1.44E-05	5.91E-05	0.00E+00	1.26E-03
Te-131m	0.00E+00	0.00E+00	0.00E+00	0.00E+00	0.00E+00	0.00E+00	0.00E+00
Te-131	0.00E+00	0.00E+00	0.00E+00	0.00E+00	0.00E+00	0.00E+00	0.00E+00
Te-132	0.00E+00	0.00E+00	0.00E+00	0.00E+00	0.00E+00	0.00E+00	0.00E+00
I-130	0.00E+00	0.00E+00	0.00E+00	0.00E+00	0.00E+00	0.00E+00	0.00E+00
I-131	5.07E-05	5.10E-05	2.90E-05	1.69E-02	8.37E-05	0.00E+00	4.54E-06
I-132	0.00E+00	0.00E+00	0.00E+00	0.00E+00	0.00E+00	0.00E+00	0.00E+00
I-133	0.00E+00	0.00E+00	0.00E+00	0.00E+00	0.00E+00	0.00E+00	0.00E+00
I-134	0.00E+00	0.00E+00	0.00E+00	0.00E+00	0.00E+00	0.00E+00	0.00E+00
I-135	0.00E+00	0.00E+00	0.00E+00	0.00E+00	0.00E+00	0.00E+00	0.00E+00
Cs-134	1.15E-01	1.89E-01	3.99E-02	0.00E+00	5.86E-02	2.10E-02	1.02E-03
Cs-136	5.18E-04	1.42E-03	9.22E-04	0.00E+00	7.59E-04	1.13E-04	5.01E-05
Cs-137	1.69E-01	1.62E-01	2.39E-02	0.00E+00	5.28E-02	1.90E-02	1.02E-03
Cs-138	0.00E+00	0.00E+00	0.00E+00	0.00E+00	0.00E+00	0.00E+00	0.00E+00
Ba-139	0.00E+00	0.00E+00	0.00E+00	0.00E+00	0.00E+00	0.00E+00	0.00E+00
Ba-140	1.67E-03	1.47E-06	9.76E-05	0.00E+00	4.77E-07	8.73E-07	8.47E-04
Ba-141	0.00E+00	0.00E+00	0.00E+00	0.00E+00	0.00E+00	0.00E+00	0.00E+00
Ba-142	0.00E+00	0.00E+00	0.00E+00	0.00E+00	0.00E+00	0.00E+00	0.00E+00
La-140	0.00E+00	0.00E+00	0.00E+00	0.00E+00	0.00E+00	0.00E+00	0.00E+00
La-142	0.00E+00	0.00E+00	0.00E+00	0.00E+00	0.00E+00	0.00E+00	0.00E+00
Ce-141	5.74E-06	2.86E-06	4.25E-07	0.00E+00	1.26E-06	0.00E+00	3.57E-03
Ce-143	0.00E+00	0.00E+00	0.00E+00	0.00E+00	0.00E+00	0.00E+00	0.00E+00
Ce-144	9.34E-04	2.93E-04	4.99E-05	0.00E+00	1.62E-04	0.00E+00	7.64E-02
Pr-143	9.51E-07	2.86E-07	4.72E-08	0.00E+00	1.55E-07	0.00E+00	1.03E-03
Pr-144	0.00E+00	0.00E+00	0.00E+00	0.00E+00	0.00E+00	0.00E+00	0.00E+00
Nd-147	3.29E-07	2.66E-07	2.06E-08	0.00E+00	1.46E-07	0.00E+00	4.22E-04
W-187	0.00E+00	0.00E+00	0.00E+00	0.00E+00	0.00E+00	0.00E+00	0.00E+00
Np-239	0.00E+00	0.00E+00	0.00E+00	0.00E+00	0.00E+00	0.00E+00	0.00E+00

REMP DOSE FACTORS FOR CHILD AGE GROUP: MEAT (Page 1 of 2)

mrem-kg/pCi-yr

NUCLIDE	BONE	LIVER	T.BODY	THYROID	KIDNEY	LUNG	GI-LLI
H-3	0.00E+00	8.30E-06	8.30E-06	8.30E-06	8.30E-06	8.30E-06	8.30E-06
C-14	4.96E-04	9.92E-05	9.92E-05	9.92E-05	9.92E-05	9.92E-05	9.92E-05
Na-24	0.00E+00	0.00E+00	0.00E+00	0.00E+00	0.00E+00	0.00E+00	0.00E+00
P-32	1.28E-02	6.00E-04	4.94E-04	0.00E+00	0.00E+00	0.00E+00	3.54E-04
Cr-51	0.00E+00	0.00E+00	2.21E-07	1.23E-07	3.36E-08	2.24E-07	1.17E-05
Mn-54	0.00E+00	4.20E-04	1.12E-04	0.00E+00	1.18E-04	0.00E+00	3.52E-04
Mn-56	0.00E+00	0.00E+00	0.00E+00	0.00E+00	0.00E+00	0.00E+00	0.00E+00
Fe-55	4.65E-04	2.47E-04	7.64E-05	0.00E+00	0.00E+00	1.39E-04	4.57E-05
Fe-59	4.96E-04	8.02E-04	4.00E-04	0.00E+00	0.00E+00	2.33E-04	8.35E-04
Co-58	0.00E+00	6.07E-05	1.86E-04	0.00E+00	0.00E+00	0.00E+00	3.54E-04
Co-60	0.00E+00	2.15E-04	6.35E-04	0.00E+00	0.00E+00	0.00E+00	1.19E-03
Ni-63	2.20E-02	1.18E-03	7.50E-04	0.00E+00	0.00E+00	0.00E+00	7.95E-05
Ni-65	0.00E+00	0.00E+00	0.00E+00	0.00E+00	0.00E+00	0.00E+00	0.00E+00
Cu-64	0.00E+00	0.00E+00	0.00E+00	0.00E+00	0.00E+00	0.00E+00	0.00E+00
Zn-65	5.31E-04	1.41E-03	8.79E-04	0.00E+00	8.91E-04	0.00E+00	2.48E-04
Zn-69	0.00E+00	0.00E+00	0.00E+00	0.00E+00	0.00E+00	0.00E+00	0.00E+00
Br-83	0.00E+00	0.00E+00	0.00E+00	0.00E+00	0.00E+00	0.00E+00	0.00E+00
Br-84	0.00E+00	0.00E+00	0.00E+00	0.00E+00	0.00E+00	0.00E+00	0.00E+00
Br-85	0.00E+00	0.00E+00	0.00E+00	0.00E+00	0.00E+00	0.00E+00	0.00E+00
Rb-86	0.00E+00	1.31E-03	8.04E-04	0.00E+00	0.00E+00	0.00E+00	8.41E-05
Rb-88	0.00E+00	0.00E+00	0.00E+00	0.00E+00	0.00E+00	0.00E+00	0.00E+00
Rb-89	0.00E+00	0.00E+00	0.00E+00	0.00E+00	0.00E+00	0.00E+00	0.00E+00
Sr-89	4.11E-02	0.00E+00	1.17E-03	0.00E+00	0.00E+00	0.00E+00	1.59E-03
Sr-90	6.96E-01	0.00E+00	1.76E-01	0.00E+00	0.00E+00	0.00E+00	9.38E-03
Sr-91	0.00E+00	0.00E+00	0.00E+00	0.00E+00	0.00E+00	0.00E+00	0.00E+00
Sr-92	0.00E+00	0.00E+00	0.00E+00	0.00E+00	0.00E+00	0.00E+00	0.00E+00
Y-90	0.00E+00	0.00E+00	0.00E+00	0.00E+00	0.00E+00	0.00E+00	0.00E+00
Y-91m	0.00E+00	0.00E+00	0.00E+00	0.00E+00	0.00E+00	0.00E+00	0.00E+00
Y-91	1.95E-05	0.00E+00	5.21E-07	0.00E+00	0.00E+00	0.00E+00	2.59E-03
Y-92	0.00E+00	0.00E+00	0.00E+00	0.00E+00	0.00E+00	0.00E+00	0.00E+00
Y-93	0.00E+00	0.00E+00	0.00E+00	0.00E+00	0.00E+00	0.00E+00	0.00E+00
Zr-95	3.83E-06	8.42E-07	7.49E-07	0.00E+00	1.21E-06	0.00E+00	8.78E-04
Zr-97	0.00E+00	0.00E+00	0.00E+00	0.00E+00	0.00E+00	0.00E+00	0.00E+00
Nb-95	6.21E-07	2.42E-07	1.73E-07	0.00E+00	2.27E-07	0.00E+00	4.47E-04
Mo-99	0.00E+00	0.00E+00	0.00E+00	0.00E+00	0.00E+00	0.00E+00	0.00E+00
Tc-99m	0.00E+00	0.00E+00	0.00E+00	0.00E+00	0.00E+00	0.00E+00	0.00E+00

REMP DOSE FACTORS FOR CHILD AGE GROUP: MEAT (Page 2 of 2)
mrem-kg/pCi-yr

NUCLIDE	BONE	LIVER	T.BODY	THYROID	KIDNEY	LUNG	GI-LLI
Tc-101	0.00E+00	0.00E+00	0.00E+00	0.00E+00	0.00E+00	0.00E+00	0.00E+00
Ru-103	2.11E-05	0.00E+00	8.10E-06	0.00E+00	5.30E-05	0.00E+00	5.45E-04
Ru-105	0.00E+00	0.00E+00	0.00E+00	0.00E+00	0.00E+00	0.00E+00	0.00E+00
Ru-106	4.62E-04	0.00E+00	5.76E-05	0.00E+00	6.24E-04	0.00E+00	7.19E-03
Ag-110m	2.09E-05	1.41E-05	1.13E-05	0.00E+00	2.63E-05	0.00E+00	1.68E-03
Te-125m	3.68E-04	9.98E-05	4.91E-05	1.03E-04	0.00E+00	0.00E+00	3.55E-04
Te-127m	1.04E-03	2.81E-04	1.24E-04	2.49E-04	2.97E-03	0.00E+00	8.45E-04
Te-127	0.00E+00	0.00E+00	0.00E+00	0.00E+00	0.00E+00	0.00E+00	0.00E+00
Te-129m	1.32E-03	3.69E-04	2.05E-04	4.26E-04	3.88E-03	0.00E+00	1.61E-03
Te-129	3.64E-06	1.02E-06	8.63E-07	2.59E-06	1.06E-05	0.00E+00	2.26E-04
Te-131m	0.00E+00	0.00E+00	0.00E+00	0.00E+00	0.00E+00	0.00E+00	0.00E+00
Te-131	0.00E+00	0.00E+00	0.00E+00	0.00E+00	0.00E+00	0.00E+00	0.00E+00
Te-132	0.00E+00	0.00E+00	0.00E+00	0.00E+00	0.00E+00	0.00E+00	0.00E+00
I-130	0.00E+00	0.00E+00	0.00E+00	0.00E+00	0.00E+00	0.00E+00	0.00E+00
I-131	1.26E-04	1.26E-04	7.19E-05	4.18E-02	2.08E-04	0.00E+00	1.13E-05
I-132	0.00E+00	0.00E+00	0.00E+00	0.00E+00	0.00E+00	0.00E+00	0.00E+00
I-133	0.00E+00	0.00E+00	0.00E+00	0.00E+00	0.00E+00	0.00E+00	0.00E+00
I-134	0.00E+00	0.00E+00	0.00E+00	0.00E+00	0.00E+00	0.00E+00	0.00E+00
I-135	0.00E+00	0.00E+00	0.00E+00	0.00E+00	0.00E+00	0.00E+00	0.00E+00
Cs-134	9.42E-03	1.55E-02	3.26E-03	0.00E+00	4.79E-03	1.72E-03	8.33E-05
Cs-136	3.36E-04	9.24E-04	5.98E-04	0.00E+00	4.92E-04	7.34E-05	3.25E-05
Cs-137	1.34E-02	1.28E-02	1.89E-03	0.00E+00	4.18E-03	1.50E-03	8.03E-05
Cs-138	0.00E+00	0.00E+00	0.00E+00	0.00E+00	0.00E+00	0.00E+00	0.00E+00
Ba-139	0.00E+00	0.00E+00	0.00E+00	0.00E+00	0.00E+00	0.00E+00	0.00E+00
Ba-140	1.15E-03	1.01E-06	6.73E-05	0.00E+00	3.29E-07	6.02E-07	5.84E-04
Ba-141	0.00E+00	0.00E+00	0.00E+00	0.00E+00	0.00E+00	0.00E+00	0.00E+00
Ba-142	0.00E+00	0.00E+00	0.00E+00	0.00E+00	0.00E+00	0.00E+00	0.00E+00
La-140	0.00E+00	0.00E+00	0.00E+00	0.00E+00	0.00E+00	0.00E+00	0.00E+00
La-142	0.00E+00	0.00E+00	0.00E+00	0.00E+00	0.00E+00	0.00E+00	0.00E+00
Ce-141	1.06E-06	5.30E-07	7.87E-08	0.00E+00	2.32E-07	0.00E+00	6.61E-04
Ce-143	0.00E+00	0.00E+00	0.00E+00	0.00E+00	0.00E+00	0.00E+00	0.00E+00
Ce-144	8.12E-05	2.55E-05	4.33E-06	0.00E+00	1.41E-05	0.00E+00	6.64E-03
Pr-143	5.80E-07	1.74E-07	2.88E-08	0.00E+00	9.43E-08	0.00E+00	6.25E-04
Pr-144	0.00E+00	0.00E+00	0.00E+00	0.00E+00	0.00E+00	0.00E+00	0.00E+00
Nd-147	3.24E-07	2.62E-07	2.03E-08	0.00E+00	1.44E-07	0.00E+00	4.15E-04
W-187	0.00E+00	0.00E+00	0.00E+00	0.00E+00	0.00E+00	0.00E+00	0.00E+00
Np-239	0.00E+00	0.00E+00	0.00E+00	0.00E+00	0.00E+00	0.00E+00	0.00E+00

REMP DOSE FACTORS FOR CHILD AGE GROUP: FISH (Page 1 of 2)

mrem-kg/pCi-yr

NUCLIDE	BONE	LIVER	T.BODY	THYROID	KIDNEY	LUNG	GI-LLI
H-3	0.00E+00	1.40E-06	1.40E-06	1.40E-06	1.40E-06	1.40E-06	1.40E-06
C-14	8.35E-05	1.67E-05	1.67E-05	1.67E-05	1.67E-05	1.67E-05	1.67E-05
Na-24	1.32E-05	1.32E-05	1.32E-05	1.32E-05	1.32E-05	1.32E-05	1.32E-05
P-32	5.42E-03	2.54E-04	2.09E-04	0.00E+00	0.00E+00	0.00E+00	1.50E-04
Cr-51	0.00E+00	0.00E+00	5.99E-08	3.32E-08	9.08E-09	6.07E-08	3.18E-06
Mn-54	0.00E+00	7.37E-05	1.96E-05	0.00E+00	2.07E-05	0.00E+00	6.18E-05
Mn-56	0.00E+00	3.64E-09	8.21E-10	0.00E+00	4.40E-09	0.00E+00	5.27E-07
Fe-55	7.93E-05	4.21E-05	1.30E-05	0.00E+00	0.00E+00	2.38E-05	7.79E-06
Fe-59	1.12E-04	1.81E-04	9.04E-05	0.00E+00	0.00E+00	5.26E-05	1.89E-04
Co-58	0.00E+00	1.23E-05	3.76E-05	0.00E+00	0.00E+00	0.00E+00	7.17E-05
Co-60	0.00E+00	3.65E-05	1.08E-04	0.00E+00	0.00E+00	0.00E+00	2.02E-04
Ni-63	3.71E-03	1.99E-04	1.26E-04	0.00E+00	0.00E+00	0.00E+00	1.34E-05
Ni-65	2.08E-08	1.96E-09	1.14E-09	0.00E+00	0.00E+00	0.00E+00	2.40E-07
Cu-64	0.00E+00	4.56E-07	2.76E-07	0.00E+00	1.10E-06	0.00E+00	2.14E-05
Zn-65	9.43E-05	2.51E-04	1.56E-04	0.00E+00	1.58E-04	0.00E+00	4.41E-05
Zn-69	5.01E-15	7.23E-15	6.69E-16	0.00E+00	4.39E-15	0.00E+00	4.56E-13
Br-83	0.00E+00	0.00E+00	1.12E-09	0.00E+00	0.00E+00	0.00E+00	0.00E+00
Br-84	0.00E+00	0.00E+00	3.40E-20	0.00E+00	0.00E+00	0.00E+00	0.00E+00
Br-85	0.00E+00	0.00E+00	0.00E+00	0.00E+00	0.00E+00	0.00E+00	0.00E+00
Rb-86	0.00E+00	4.45E-04	2.74E-04	0.00E+00	0.00E+00	0.00E+00	2.87E-05
Rb-88	0.00E+00	0.00E+00	0.00E+00	0.00E+00	0.00E+00	0.00E+00	0.00E+00
Rb-89	0.00E+00	0.00E+00	0.00E+00	0.00E+00	0.00E+00	0.00E+00	0.00E+00
Sr-89	8.98E-03	0.00E+00	2.57E-04	0.00E+00	0.00E+00	0.00E+00	3.48E-04
Sr-90	1.17E-01	0.00E+00	2.97E-02	0.00E+00	0.00E+00	0.00E+00	1.58E-03
Sr-91	2.87E-05	0.00E+00	1.09E-06	0.00E+00	0.00E+00	0.00E+00	6.35E-05
Sr-92	1.34E-07	0.00E+00	5.39E-09	0.00E+00	0.00E+00	0.00E+00	2.55E-06
Y-90	2.19E-07	0.00E+00	5.86E-09	0.00E+00	0.00E+00	0.00E+00	6.23E-04
Y-91m	5.22E-18	0.00E+00	1.90E-19	0.00E+00	0.00E+00	0.00E+00	1.02E-14
Y-91	4.10E-06	0.00E+00	1.10E-07	0.00E+00	0.00E+00	0.00E+00	5.47E-04
Y-92	2.26E-10	0.00E+00	6.47E-12	0.00E+00	0.00E+00	0.00E+00	6.53E-06
Y-93	1.52E-08	0.00E+00	4.16E-10	0.00E+00	0.00E+00	0.00E+00	2.26E-04
Zr-95	7.92E-07	1.74E-07	1.55E-07	0.00E+00	2.49E-07	0.00E+00	1.82E-04
Zr-97	1.80E-08	2.60E-09	1.54E-09	0.00E+00	3.74E-09	0.00E+00	3.94E-04
Nb-95	1.52E-07	5.93E-08	4.23E-08	0.00E+00	5.57E-08	0.00E+00	1.10E-04
Mo-99	0.00E+00	7.13E-05	1.76E-05	0.00E+00	1.52E-04	0.00E+00	5.90E-05
Tc-99m	4.02E-10	7.88E-10	1.31E-08	0.00E+00	1.14E-08	4.00E-10	4.48E-07

REMP DOSE FACTORS FOR CHILD AGE GROUP: FISH (Page 2 of 2)

mrem-kg/pCi-yr

NUCLIDE	BONE	LIVER	T.BODY	THYROID	KIDNEY	LUNG	GI-LLI
Tc-101	0.00E+00	0.00E+00	0.00E+00	0.00E+00	0.00E+00	0.00E+00	0.00E+00
Ru-103	4.96E-06	0.00E+00	1.91E-06	0.00E+00	1.25E-05	0.00E+00	1.28E-04
Ru-105	1.05E-08	0.00E+00	3.81E-09	0.00E+00	9.23E-08	0.00E+00	6.85E-06
Ru-106	8.06E-05	0.00E+00	1.01E-05	0.00E+00	1.09E-04	0.00E+00	1.25E-03
Ag-110m	3.71E-06	2.50E-06	2.00E-06	0.00E+00	4.67E-06	0.00E+00	2.98E-04
Te-125m	7.77E-05	2.11E-05	1.04E-05	2.18E-05	0.00E+00	0.00E+00	7.50E-05
Te-127m	1.98E-04	5.33E-05	2.35E-05	4.74E-05	5.65E-04	0.00E+00	1.60E-04
Te-127	5.48E-07	1.48E-07	1.18E-07	3.80E-07	1.56E-06	0.00E+00	2.14E-05
Te-129m	3.29E-04	9.19E-05	5.11E-05	1.06E-04	9.67E-04	0.00E+00	4.01E-04
Te-129	9.06E-07	2.53E-07	2.15E-07	6.46E-07	2.65E-06	0.00E+00	5.64E-05
Te-131m	2.85E-05	9.87E-06	1.05E-05	2.03E-05	9.55E-05	0.00E+00	4.00E-04
Te-131	2.84E-24	0.00E+00	0.00E+00	2.17E-24	8.59E-24	0.00E+00	1.49E-23
Te-132	5.63E-05	2.49E-05	3.01E-05	3.63E-05	2.31E-04	0.00E+00	2.51E-04
I-130	5.24E-06	1.06E-05	5.46E-06	1.17E-03	1.58E-05	0.00E+00	4.96E-06
I-131	1.09E-04	1.10E-04	6.22E-05	3.62E-02	1.80E-04	0.00E+00	9.75E-06
I-132	3.99E-09	7.33E-09	3.37E-09	3.40E-07	1.12E-08	0.00E+00	8.62E-09
I-133	1.84E-05	2.27E-05	8.59E-06	4.22E-03	3.78E-05	0.00E+00	9.15E-06
I-134	1.72E-14	3.20E-14	1.47E-14	7.36E-13	4.89E-14	0.00E+00	2.12E-14
I-135	9.75E-07	1.75E-06	8.30E-07	1.55E-04	2.69E-06	0.00E+00	1.34E-06
Cs-134	1.61E-03	2.65E-03	5.58E-04	0.00E+00	8.20E-04	2.94E-04	1.43E-05
Cs-136	1.54E-04	4.23E-04	2.74E-04	0.00E+00	2.25E-04	3.36E-05	1.49E-05
Cs-137	2.26E-03	2.16E-03	3.19E-04	0.00E+00	7.04E-04	2.53E-04	1.35E-05
Cs-138	5.77E-20	8.03E-20	5.09E-20	0.00E+00	5.65E-20	6.08E-21	3.70E-20
Ba-139	1.78E-11	9.49E-15	5.15E-13	0.00E+00	8.29E-15	5.58E-15	1.03E-09
Ba-140	5.43E-04	4.76E-07	3.17E-05	0.00E+00	1.55E-07	2.84E-07	2.75E-04
Ba-141	0.00E+00	0.00E+00	0.00E+00	0.00E+00	0.00E+00	0.00E+00	0.00E+00
Ba-142	0.00E+00	0.00E+00	0.00E+00	0.00E+00	0.00E+00	0.00E+00	0.00E+00
La-140	4.61E-08	1.61E-08	5.43E-09	0.00E+00	0.00E+00	0.00E+00	4.49E-04
La-142	1.06E-13	3.36E-14	1.05E-14	0.00E+00	0.00E+00	0.00E+00	6.67E-09
Ce-141	2.68E-07	1.34E-07	1.99E-08	0.00E+00	5.86E-08	0.00E+00	1.67E-04
Ce-143	2.91E-08	1.58E-05	2.29E-09	0.00E+00	6.63E-09	0.00E+00	2.31E-04
Ce-144	1.43E-05	4.49E-06	7.64E-07	0.00E+00	2.48E-06	0.00E+00	1.17E-03
Pr-143	2.58E-07	7.74E-08	1.28E-08	0.00E+00	4.19E-08	0.00E+00	2.78E-04
Pr-144	0.00E+00	0.00E+00	0.00E+00	0.00E+00	0.00E+00	0.00E+00	0.00E+00
Nd-147	1.81E-07	1.46E-07	1.13E-08	0.00E+00	8.03E-08	0.00E+00	2.32E-04
W-187	1.47E-06	8.72E-07	3.91E-07	0.00E+00	0.00E+00	0.00E+00	1.23E-04
Np-239	2.70E-08	1.94E-09	1.36E-09	0.00E+00	5.60E-09	0.00E+00	1.43E-04

REMP DOSE FACTORS FOR CHILD AGE GROUP: DRINKING WATER (Page 1 of 2)

mrem-liter/pCi-yr

NUCLIDE	BONE	LIVER	T.BODY	THYROID	KIDNEY	LUNG	GI-LLI
H-3	0.00E+00	1.04E-04	1.04E-04	1.04E-04	1.04E-04	1.04E-04	1.04E-04
C-14	6.17E-03	1.23E-03	1.23E-03	1.23E-03	1.23E-03	1.23E-03	1.23E-03
Na-24	1.70E-03	1.70E-03	1.70E-03	1.70E-03	1.70E-03	1.70E-03	1.70E-03
P-32	4.11E-01	1.92E-02	1.58E-02	0.00E+00	0.00E+00	0.00E+00	1.13E-02
Cr-51	0.00E+00	0.00E+00	4.48E-06	2.49E-06	6.80E-07	4.54E-06	2.38E-04
Mn-54	0.00E+00	5.45E-03	1.45E-03	0.00E+00	1.53E-03	0.00E+00	4.57E-03
Mn-56	0.00E+00	6.77E-06	1.53E-06	0.00E+00	8.18E-06	0.00E+00	9.81E-04
Fe-55	5.86E-03	3.11E-03	9.64E-04	0.00E+00	0.00E+00	1.76E-03	5.76E-04
Fe-59	8.35E-03	1.35E-02	6.73E-03	0.00E+00	0.00E+00	3.92E-03	1.41E-02
Co-58	0.00E+00	9.14E-04	2.80E-03	0.00E+00	0.00E+00	0.00E+00	5.33E-03
Co-60	0.00E+00	2.70E-03	7.95E-03	0.00E+00	0.00E+00	0.00E+00	1.49E-02
Ni-63	2.74E-01	1.47E-02	9.33E-03	0.00E+00	0.00E+00	0.00E+00	9.89E-04
Ni-65	4.17E-05	3.93E-06	2.29E-06	0.00E+00	0.00E+00	0.00E+00	4.81E-04
Cu-64	0.00E+00	6.49E-05	3.92E-05	0.00E+00	1.57E-04	0.00E+00	3.05E-03
Zn-65	6.98E-03	1.86E-02	1.16E-02	0.00E+00	1.17E-02	0.00E+00	3.26E-03
Zn-69	2.87E-09	4.15E-09	3.84E-10	0.00E+00	2.52E-09	0.00E+00	2.62E-07
Br-83	0.00E+00	0.00E+00	2.69E-06	0.00E+00	0.00E+00	0.00E+00	0.00E+00
Br-84	0.00E+00	0.00E+00	1.59E-11	0.00E+00	0.00E+00	0.00E+00	0.00E+00
Br-85	0.00E+00	0.00E+00	0.00E+00	0.00E+00	0.00E+00	0.00E+00	0.00E+00
Rb-86	0.00E+00	3.35E-02	2.06E-02	0.00E+00	0.00E+00	0.00E+00	2.16E-03
Rb-88	0.00E+00	6.83E-17	4.74E-17	0.00E+00	0.00E+00	0.00E+00	3.35E-18
Rb-89	0.00E+00	5.84E-19	5.19E-19	0.00E+00	0.00E+00	0.00E+00	5.09E-21
Sr-89	6.69E-01	0.00E+00	1.91E-02	0.00E+00	0.00E+00	0.00E+00	2.59E-02
Sr-90	8.67E+00	0.00E+00	2.20E+00	0.00E+00	0.00E+00	0.00E+00	1.17E-01
Sr-91	5.10E-03	0.00E+00	1.93E-04	0.00E+00	0.00E+00	0.00E+00	1.13E-02
Sr-92	2.14E-04	0.00E+00	8.58E-06	0.00E+00	0.00E+00	0.00E+00	4.05E-03
Y-90	1.84E-05	0.00E+00	4.93E-07	0.00E+00	0.00E+00	0.00E+00	5.24E-02
Y-91m	8.67E-12	0.00E+00	3.16E-13	0.00E+00	0.00E+00	0.00E+00	1.70E-08
Y-91	3.05E-04	0.00E+00	8.16E-06	0.00E+00	0.00E+00	0.00E+00	4.07E-02
Y-92	1.75E-07	0.00E+00	5.01E-09	0.00E+00	0.00E+00	0.00E+00	5.06E-03
Y-93	2.55E-06	0.00E+00	7.01E-08	0.00E+00	0.00E+00	0.00E+00	3.81E-02
Zr-95	5.88E-05	1.29E-05	1.15E-05	0.00E+00	1.85E-05	0.00E+00	1.35E-02
Zr-97	2.18E-06	3.15E-07	1.86E-07	0.00E+00	4.52E-07	0.00E+00	4.77E-02
Nb-95	1.14E-05	4.42E-06	3.16E-06	0.00E+00	4.16E-06	0.00E+00	8.18E-03
Mo-99	0.00E+00	5.98E-03	1.48E-03	0.00E+00	1.28E-02	0.00E+00	4.95E-03
Tc-99m	1.18E-07	2.32E-07	3.84E-06	0.00E+00	3.37E-06	1.18E-07	1.32E-04

REMP DOSE FACTORS FOR CHILD AGE GROUP: DRINKING WATER (Page 2 of 2)

mrem-liter/pCi-yr

NUCLIDE	BONE	LIVER	T.BODY	THYROID	KIDNEY	LUNG	GI-LLI
Tc-101	3.19E-22	3.34E-22	4.23E-21	0.00E+00	5.70E-21	1.77E-22	1.06E-21
Ru-103	3.70E-04	0.00E+00	1.42E-04	0.00E+00	9.30E-04	0.00E+00	9.55E-03
Ru-105	5.05E-06	0.00E+00	1.83E-06	0.00E+00	4.44E-05	0.00E+00	3.30E-03
Ru-106	5.96E-03	0.00E+00	7.44E-04	0.00E+00	8.05E-03	0.00E+00	9.27E-02
Ag-110m	2.75E-04	1.85E-04	1.48E-04	0.00E+00	3.45E-04	0.00E+00	2.21E-02
Te-125m	5.78E-03	1.57E-03	7.71E-04	1.62E-03	0.00E+00	0.00E+00	5.58E-03
Te-127m	1.47E-02	3.96E-03	1.74E-03	3.51E-03	4.19E-02	0.00E+00	1.19E-02
Te-127	9.87E-05	2.66E-05	2.12E-05	6.83E-05	2.81E-04	0.00E+00	3.86E-03
Te-129m	2.46E-02	6.86E-03	3.82E-03	7.92E-03	7.22E-02	0.00E+00	3.00E-02
Te-129	6.76E-05	1.89E-05	1.61E-05	4.83E-05	1.98E-04	0.00E+00	4.21E-03
Te-131m	2.78E-03	9.62E-04	1.02E-03	1.98E-03	9.31E-03	0.00E+00	3.90E-02
Te-131	9.43E-14	2.87E-14	2.80E-14	7.21E-14	2.85E-13	0.00E+00	4.95E-13
Te-132	4.63E-03	2.05E-03	2.48E-03	2.99E-03	1.90E-02	0.00E+00	2.06E-02
I-130	7.60E-04	1.54E-03	7.91E-04	1.69E-01	2.29E-03	0.00E+00	7.18E-04
I-131	8.40E-03	8.45E-03	4.80E-03	2.79E+00	1.39E-02	0.00E+00	7.52E-04
I-132	1.10E-05	2.02E-05	9.27E-06	9.35E-04	3.08E-05	0.00E+00	2.37E-05
I-133	2.02E-03	2.50E-03	9.47E-04	4.65E-01	4.17E-03	0.00E+00	1.01E-03
I-134	1.65E-08	3.06E-08	1.41E-08	7.05E-07	4.69E-08	0.00E+00	2.03E-08
I-135	2.54E-04	4.56E-04	2.16E-04	4.04E-02	7.00E-04	0.00E+00	3.48E-04
Cs-134	1.19E-01	1.96E-01	4.13E-02	0.00E+00	6.07E-02	2.18E-02	1.06E-03
Cs-136	1.17E-02	3.21E-02	2.08E-02	0.00E+00	1.71E-02	2.55E-03	1.13E-03
Cs-137	1.67E-01	1.60E-01	2.36E-02	0.00E+00	5.20E-02	1.87E-02	1.00E-03
Cs-138	2.23E-11	3.10E-11	1.96E-11	0.00E+00	2.18E-11	2.34E-12	1.43E-11
Ba-139	5.27E-07	2.81E-10	1.53E-08	0.00E+00	2.46E-10	1.65E-10	3.04E-05
Ba-140	4.12E-02	3.61E-05	2.41E-03	0.00E+00	1.18E-05	2.15E-05	2.09E-02
Ba-141	1.48E-16	8.26E-20	4.80E-18	0.00E+00	7.15E-20	4.86E-19	8.41E-17
Ba-142	0.00E+00	0.00E+00	0.00E+00	0.00E+00	0.00E+00	0.00E+00	0.00E+00
La-140	4.19E-06	1.46E-06	4.94E-07	0.00E+00	0.00E+00	0.00E+00	4.08E-02
La-142	1.44E-09	4.60E-10	1.44E-10	0.00E+00	0.00E+00	0.00E+00	9.12E-05
Ce-141	2.00E-05	9.99E-06	1.48E-06	0.00E+00	4.38E-06	0.00E+00	1.25E-02
Ce-143	2.77E-06	1.50E-03	2.18E-07	0.00E+00	6.30E-07	0.00E+00	2.20E-02
Ce-144	1.06E-03	3.32E-04	5.65E-05	0.00E+00	1.84E-04	0.00E+00	8.66E-02
Pr-143	1.95E-05	5.87E-06	9.69E-07	0.00E+00	3.18E-06	0.00E+00	2.11E-02
Pr-144	2.00E-20	6.18E-21	1.00E-21	0.00E+00	3.27E-21	0.00E+00	1.33E-17
Nd-147	1.38E-05	1.12E-05	8.65E-07	0.00E+00	6.13E-06	0.00E+00	1.77E-02
W-187	1.54E-04	9.14E-05	4.10E-05	0.00E+00	0.00E+00	0.00E+00	1.28E-02
Np-239	2.31E-06	1.66E-07	1.17E-07	0.00E+00	4.80E-07	0.00E+00	1.23E-02

REMP DOSE FACTORS FOR CHILD AGE GROUP: INHALATION - QUARTERLY SAMPLING (Page 1 of 2)

mrem-m^3/pCi-yr

NUCLIDE	BONE	LIVER	T.BODY	THYROID	KIDNEY	LUNG	GI-LLI
H-3	0.00E+00	1.13E-03	1.13E-03	1.13E-03	1.13E-03	1.13E-03	1.13E-03
C-14	3.59E-02	6.73E-03	6.73E-03	6.73E-03	6.73E-03	6.73E-03	6.73E-03
Na-24	0.00E+00	0.00E+00	0.00E+00	0.00E+00	0.00E+00	0.00E+00	0.00E+00
P-32	2.38E+01	1.05E+00	9.03E-01	0.00E+00	0.00E+00	0.00E+00	3.86E-01
Cr-51	0.00E+00	0.00E+00	4.83E-04	2.68E-04	7.61E-05	5.32E-02	3.39E-03
Mn-54	0.00E+00	4.75E-02	1.05E-02	0.00E+00	1.11E-02	1.74E-02	2.53E-02
Mn-56	0.00E+00	0.00E+00	0.00E+00	0.00E+00	0.00E+00	0.00E+00	0.00E+00
Fe-55	4.89E-02	2.60E-02	8.02E-03	0.00E+00	0.00E+00	1.15E-01	2.96E-03
Fe-59	4.20E-02	6.79E-02	3.39E-02	0.00E+00	0.00E+00	2.58E+00	1.44E-01
Co-58	0.00E+00	2.77E-03	4.94E-03	0.00E+00	0.00E+00	1.73E+00	5.37E-02
Co-60	0.00E+00	1.34E-02	2.30E-02	0.00E+00	0.00E+00	7.18E+00	9.78E-02
Ni-63	8.22E-01	4.63E-02	2.80E-02	0.00E+00	0.00E+00	2.75E-01	6.33E-03
Ni-65	0.00E+00	0.00E+00	0.00E+00	0.00E+00	0.00E+00	0.00E+00	0.00E+00
Cu-64	0.00E+00	0.00E+00	0.00E+00	0.00E+00	0.00E+00	0.00E+00	0.00E+00
Zn-65	4.84E-02	1.29E-01	8.00E-02	0.00E+00	8.13E-02	1.13E+00	1.86E-02
Zn-69	0.00E+00	0.00E+00	0.00E+00	0.00E+00	0.00E+00	0.00E+00	0.00E+00
Br-83	0.00E+00	0.00E+00	0.00E+00	0.00E+00	0.00E+00	0.00E+00	0.00E+00
Br-84	0.00E+00	0.00E+00	0.00E+00	0.00E+00	0.00E+00	0.00E+00	0.00E+00
Br-85	0.00E+00	0.00E+00	0.00E+00	0.00E+00	0.00E+00	0.00E+00	0.00E+00
Rb-86	0.00E+00	1.08E+00	6.23E-01	0.00E+00	0.00E+00	0.00E+00	4.35E-02
Rb-88	0.00E+00	0.00E+00	0.00E+00	0.00E+00	0.00E+00	0.00E+00	0.00E+00
Rb-89	0.00E+00	0.00E+00	0.00E+00	0.00E+00	0.00E+00	0.00E+00	0.00E+00
Sr-89	1.12E+00	0.00E+00	3.22E-02	0.00E+00	0.00E+00	4.03E+00	3.13E-01
Sr-90	1.01E+02	0.00E+00	6.46E+00	0.00E+00	0.00E+00	1.48E+01	3.44E-01
Sr-91	0.00E+00	0.00E+00	0.00E+00	0.00E+00	0.00E+00	0.00E+00	0.00E+00
Sr-92	0.00E+00	0.00E+00	0.00E+00	0.00E+00	0.00E+00	0.00E+00	0.00E+00
Y-90	0.00E+00	0.00E+00	0.00E+00	0.00E+00	0.00E+00	0.00E+00	0.00E+00
Y-91m	0.00E+00	0.00E+00	0.00E+00	0.00E+00	0.00E+00	0.00E+00	0.00E+00
Y-91	1.57E+00	0.00E+00	4.19E-02	0.00E+00	0.00E+00	4.51E+00	3.16E-01
Y-92	0.00E+00	0.00E+00	0.00E+00	0.00E+00	0.00E+00	0.00E+00	0.00E+00
Y-93	0.00E+00	0.00E+00	0.00E+00	0.00E+00	0.00E+00	0.00E+00	0.00E+00
Zr-95	3.11E-01	6.85E-02	6.06E-02	0.00E+00	9.76E-02	3.66E+00	1.00E-01
Zr-97	0.00E+00	0.00E+00	0.00E+00	0.00E+00	0.00E+00	0.00E+00	0.00E+00
Nb-95	5.79E-02	2.26E-02	1.61E-02	0.00E+00	2.12E-02	1.51E+00	9.12E-02
Mo-99	0.00E+00	0.00E+00	0.00E+00	0.00E+00	0.00E+00	0.00E+00	0.00E+00
Tc-99m	0.00E+00	0.00E+00	0.00E+00	0.00E+00	0.00E+00	0.00E+00	0.00E+00

REMP DOSE FACTORS FOR CHILD AGE GROUP: INHALATION - QUARTERLY SAMPLING (Page 2 of 2)

mrem-m^3/pCi-yr

NUCLIDE	BONE	LIVER	T.BODY	THYROID	KIDNEY	LUNG	GI-LLI
Tc-101	0.00E+00	0.00E+00	0.00E+00	0.00E+00	0.00E+00	0.00E+00	0.00E+00
Ru-103	6.24E-03	0.00E+00	2.40E-03	0.00E+00	1.57E-02	1.48E+00	1.00E-01
Ru-105	0.00E+00	0.00E+00	0.00E+00	0.00E+00	0.00E+00	0.00E+00	0.00E+00
Ru-106	1.48E-01	0.00E+00	1.84E-02	0.00E+00	2.00E-01	1.56E+01	4.68E-01
Ag-110m	1.91E-02	1.29E-02	1.04E-02	0.00E+00	2.41E-02	6.21E+00	1.14E-01
Te-125m	1.16E-02	4.01E-03	1.58E-03	3.32E-03	0.00E+00	8.23E-01	5.83E-02
Te-127m	3.32E-02	1.14E-02	4.04E-03	8.11E-03	8.51E-02	1.98E+00	9.54E-02
Te-127	0.00E+00	0.00E+00	0.00E+00	0.00E+00	0.00E+00	0.00E+00	0.00E+00
Te-129m	4.92E-02	1.75E-02	7.80E-03	1.62E-02	1.29E-01	4.51E+00	4.66E-01
Te-129	2.50E-07	8.96E-08	6.11E-08	1.83E-07	6.58E-07	7.52E-03	6.53E-02
Te-131m	0.00E+00	0.00E+00	0.00E+00	0.00E+00	0.00E+00	0.00E+00	0.00E+00
Te-131	0.00E+00	0.00E+00	0.00E+00	0.00E+00	0.00E+00	0.00E+00	0.00E+00
Te-132	0.00E+00	0.00E+00	0.00E+00	0.00E+00	0.00E+00	0.00E+00	0.00E+00
I-130	0.00E+00	0.00E+00	0.00E+00	0.00E+00	0.00E+00	0.00E+00	0.00E+00
I-131	2.46E+00	2.46E+00	1.39E+00	8.30E+02	4.03E+00	0.00E+00	1.45E-01
I-132	0.00E+00	0.00E+00	0.00E+00	0.00E+00	0.00E+00	0.00E+00	0.00E+00
I-133	0.00E+00	0.00E+00	0.00E+00	0.00E+00	0.00E+00	0.00E+00	0.00E+00
I-134	0.00E+00	0.00E+00	0.00E+00	0.00E+00	0.00E+00	0.00E+00	0.00E+00
I-135	0.00E+00	0.00E+00	0.00E+00	0.00E+00	0.00E+00	0.00E+00	0.00E+00
Cs-134	6.79E-01	1.06E+00	2.34E-01	0.00E+00	3.45E-01	1.26E-01	4.01E-03
Cs-136	7.20E-01	1.89E+00	1.28E+00	0.00E+00	1.06E+00	1.61E-01	4.62E-02
Cs-137	9.09E-01	8.27E-01	1.29E-01	0.00E+00	2.83E-01	1.04E-01	3.63E-03
Cs-138	0.00E+00	0.00E+00	0.00E+00	0.00E+00	0.00E+00	0.00E+00	0.00E+00
Ba-139	0.00E+00	0.00E+00	0.00E+00	0.00E+00	0.00E+00	0.00E+00	0.00E+00
Ba-140	8.77E-01	7.68E-04	5.13E-02	0.00E+00	2.50E-04	2.07E+01	1.21E+00
Ba-141	0.00E+00	0.00E+00	0.00E+00	0.00E+00	0.00E+00	0.00E+00	0.00E+00
Ba-142	0.00E+00	0.00E+00	0.00E+00	0.00E+00	0.00E+00	0.00E+00	0.00E+00
La-140	0.00E+00	0.00E+00	0.00E+00	0.00E+00	0.00E+00	0.00E+00	0.00E+00
La-142	0.00E+00	0.00E+00	0.00E+00	0.00E+00	0.00E+00	0.00E+00	0.00E+00
Ce-141	1.04E-01	5.17E-02	7.67E-03	0.00E+00	2.26E-02	1.44E+00	1.50E-01
Ce-143	0.00E+00	0.00E+00	0.00E+00	0.00E+00	0.00E+00	0.00E+00	0.00E+00
Ce-144	7.57E+00	2.37E+00	4.04E-01	0.00E+00	1.31E+00	1.34E+01	4.34E-01
Pr-143	1.90E-01	5.72E-02	9.41E-03	0.00E+00	3.09E-02	4.46E+00	1.00E+00
Pr-144	0.00E+00	0.00E+00	0.00E+00	0.00E+00	0.00E+00	0.00E+00	0.00E+00
Nd-147	1.93E-01	1.56E-01	1.21E-02	0.00E+00	8.57E-02	5.85E+00	1.46E+00
W-187	0.00E+00	0.00E+00	0.00E+00	0.00E+00	0.00E+00	0.00E+00	0.00E+00
Np-239	0.00E+00	0.00E+00	0.00E+00	0.00E+00	0.00E+00	0.00E+00	0.00E+00

REMP DOSE FACTORS FOR CHILD AGE GROUP: INHALATION - WEEKLY SAMPLING (Page 1 of 2)

mrem-m^3/pCi-yr

NUCLIDE	BONE	LIVER	T.BODY	THYROID	KIDNEY	LUNG	GI-LLI
H-3	0.00E+00	1.13E-03	1.13E-03	1.13E-03	1.13E-03	1.13E-03	1.13E-03
C-14	3.59E-02	6.73E-03	6.73E-03	6.73E-03	6.73E-03	6.73E-03	6.73E-03
Na-24	0.00E+00	0.00E+00	0.00E+00	0.00E+00	0.00E+00	0.00E+00	0.00E+00
P-32	3.09E+00	1.35E-01	1.17E-01	0.00E+00	0.00E+00	0.00E+00	5.00E-02
Cr-51	0.00E+00	0.00E+00	1.68E-04	9.33E-05	2.65E-05	1.85E-02	1.18E-03
Mn-54	0.00E+00	4.33E-02	9.58E-03	0.00E+00	1.01E-02	1.59E-02	2.31E-02
Mn-56	0.00E+00	0.00E+00	0.00E+00	0.00E+00	0.00E+00	0.00E+00	0.00E+00
Fe-55	4.75E-02	2.52E-02	7.79E-03	0.00E+00	0.00E+00	1.11E-01	2.87E-03
Fe-59	2.18E-02	3.53E-02	1.76E-02	0.00E+00	0.00E+00	1.34E+00	7.46E-02
Co-58	0.00E+00	1.83E-03	3.27E-03	0.00E+00	0.00E+00	1.14E+00	3.56E-02
Co-60	0.00E+00	1.32E-02	2.27E-02	0.00E+00	0.00E+00	7.08E+00	9.63E-02
Ni-63	8.21E-01	4.63E-02	2.80E-02	0.00E+00	0.00E+00	2.75E-01	6.33E-03
Ni-65	0.00E+00	0.00E+00	0.00E+00	0.00E+00	0.00E+00	0.00E+00	0.00E+00
Cu-64	0.00E+00	0.00E+00	0.00E+00	0.00E+00	0.00E+00	0.00E+00	0.00E+00
Zn-65	4.30E-02	1.14E-01	7.10E-02	0.00E+00	7.21E-02	1.01E+00	1.65E-02
Zn-69	0.00E+00	0.00E+00	0.00E+00	0.00E+00	0.00E+00	0.00E+00	0.00E+00
Br-83	0.00E+00	0.00E+00	0.00E+00	0.00E+00	0.00E+00	0.00E+00	0.00E+00
Br-84	0.00E+00	0.00E+00	0.00E+00	0.00E+00	0.00E+00	0.00E+00	0.00E+00
Br-85	0.00E+00	0.00E+00	0.00E+00	0.00E+00	0.00E+00	0.00E+00	0.00E+00
Rb-86	0.00E+00	2.26E-01	1.30E-01	0.00E+00	0.00E+00	0.00E+00	9.10E-03
Rb-88	0.00E+00	0.00E+00	0.00E+00	0.00E+00	0.00E+00	0.00E+00	0.00E+00
Rb-89	0.00E+00	0.00E+00	0.00E+00	0.00E+00	0.00E+00	0.00E+00	0.00E+00
Sr-89	6.29E-01	0.00E+00	1.81E-02	0.00E+00	0.00E+00	2.26E+00	1.75E-01
Sr-90	1.01E+02	0.00E+00	6.44E+00	0.00E+00	0.00E+00	1.48E+01	3.43E-01
Sr-91	0.00E+00	0.00E+00	0.00E+00	0.00E+00	0.00E+00	0.00E+00	0.00E+00
Sr-92	0.00E+00	0.00E+00	0.00E+00	0.00E+00	0.00E+00	0.00E+00	0.00E+00
Y-90	0.00E+00	0.00E+00	0.00E+00	0.00E+00	0.00E+00	0.00E+00	0.00E+00
Y-91m	0.00E+00	0.00E+00	0.00E+00	0.00E+00	0.00E+00	0.00E+00	0.00E+00
Y-91	9.53E-01	0.00E+00	2.54E-02	0.00E+00	0.00E+00	2.74E+00	1.92E-01
Y-92	0.00E+00	0.00E+00	0.00E+00	0.00E+00	0.00E+00	0.00E+00	0.00E+00
Y-93	0.00E+00	0.00E+00	0.00E+00	0.00E+00	0.00E+00	0.00E+00	0.00E+00
Zr-95	1.97E-01	4.34E-02	3.84E-02	0.00E+00	6.19E-02	2.32E+00	6.34E-02
Zr-97	0.00E+00	0.00E+00	0.00E+00	0.00E+00	0.00E+00	0.00E+00	0.00E+00
Nb-95	2.52E-02	9.83E-03	7.02E-03	0.00E+00	9.24E-03	6.58E-01	3.97E-02
Mo-99	0.00E+00	0.00E+00	0.00E+00	0.00E+00	0.00E+00	0.00E+00	0.00E+00
Tc-99m	0.00E+00	0.00E+00	0.00E+00	0.00E+00	0.00E+00	0.00E+00	0.00E+00

REMP DOSE FACTORS FOR CHILD AGE GROUP: INHALATION - WEEKLY SAMPLING (Page 2 of 2)

mrem-m^3/pCi-yr

NUCLIDE	BONE	LIVER	T.BODY	THYROID	KIDNEY	LUNG	GI-LLI
Tc-101	0.00E+00	0.00E+00	0.00E+00	0.00E+00	0.00E+00	0.00E+00	0.00E+00
Ru-103	2.97E-03	0.00E+00	1.14E-03	0.00E+00	7.48E-03	7.04E-01	4.76E-02
Ru-105	0.00E+00	0.00E+00	0.00E+00	0.00E+00	0.00E+00	0.00E+00	0.00E+00
Ru-106	1.37E-01	0.00E+00	1.70E-02	0.00E+00	1.85E-01	1.44E+01	4.32E-01
Ag-110m	1.70E-02	1.15E-02	9.23E-03	0.00E+00	2.14E-02	5.53E+00	1.01E-01
Te-125m	7.02E-03	2.43E-03	9.53E-04	2.01E-03	0.00E+00	4.98E-01	3.52E-02
Te-127m	2.54E-02	8.74E-03	3.09E-03	6.20E-03	6.51E-02	1.51E+00	7.30E-02
Te-127	0.00E+00	0.00E+00	0.00E+00	0.00E+00	0.00E+00	0.00E+00	0.00E+00
Te-129m	2.06E-02	7.36E-03	3.27E-03	6.80E-03	5.41E-02	1.89E+00	1.95E-01
Te-129	1.05E-07	3.76E-08	2.56E-08	7.68E-08	2.76E-07	3.15E-03	2.74E-02
Te-131m	0.00E+00	0.00E+00	0.00E+00	0.00E+00	0.00E+00	0.00E+00	0.00E+00
Te-131	0.00E+00	0.00E+00	0.00E+00	0.00E+00	0.00E+00	0.00E+00	0.00E+00
Te-132	0.00E+00	0.00E+00	0.00E+00	0.00E+00	0.00E+00	0.00E+00	0.00E+00
I-130	0.00E+00	0.00E+00	0.00E+00	0.00E+00	0.00E+00	0.00E+00	0.00E+00
I-131	4.81E-02	4.81E-02	2.73E-02	1.62E+01	7.88E-02	0.00E+00	2.84E-03
I-132	0.00E+00	0.00E+00	0.00E+00	0.00E+00	0.00E+00	0.00E+00	0.00E+00
I-133	0.00E+00	0.00E+00	0.00E+00	0.00E+00	0.00E+00	0.00E+00	0.00E+00
I-134	0.00E+00	0.00E+00	0.00E+00	0.00E+00	0.00E+00	0.00E+00	0.00E+00
I-135	0.00E+00	0.00E+00	0.00E+00	0.00E+00	0.00E+00	0.00E+00	0.00E+00
Cs-134	6.53E-01	1.02E+00	2.25E-01	0.00E+00	3.31E-01	1.21E-01	3.86E-03
Cs-136	7.83E-02	2.06E-01	1.40E-01	0.00E+00	1.15E-01	1.75E-02	5.03E-03
Cs-137	9.07E-01	8.25E-01	1.28E-01	0.00E+00	2.82E-01	1.04E-01	3.62E-03
Cs-138	0.00E+00	0.00E+00	0.00E+00	0.00E+00	0.00E+00	0.00E+00	0.00E+00
Ba-139	0.00E+00	0.00E+00	0.00E+00	0.00E+00	0.00E+00	0.00E+00	0.00E+00
Ba-140	8.95E-02	7.83E-05	5.23E-03	0.00E+00	2.55E-05	2.11E+00	1.23E-01
Ba-141	0.00E+00	0.00E+00	0.00E+00	0.00E+00	0.00E+00	0.00E+00	0.00E+00
Ba-142	0.00E+00	0.00E+00	0.00E+00	0.00E+00	0.00E+00	0.00E+00	0.00E+00
La-140	0.00E+00	0.00E+00	0.00E+00	0.00E+00	0.00E+00	0.00E+00	0.00E+00
La-142	0.00E+00	0.00E+00	0.00E+00	0.00E+00	0.00E+00	0.00E+00	0.00E+00
Ce-141	4.23E-02	2.11E-02	3.12E-03	0.00E+00	9.21E-03	5.86E-01	6.10E-02
Ce-143	0.00E+00	0.00E+00	0.00E+00	0.00E+00	0.00E+00	0.00E+00	0.00E+00
Ce-144	6.83E+00	2.13E+00	3.65E-01	0.00E+00	1.18E+00	1.21E+01	3.92E-01
Pr-143	2.21E-02	6.64E-03	1.09E-03	0.00E+00	3.59E-03	5.18E-01	1.16E-01
Pr-144	0.00E+00	0.00E+00	0.00E+00	0.00E+00	0.00E+00	0.00E+00	0.00E+00
Nd-147	1.35E-02	1.09E-02	8.49E-04	0.00E+00	6.00E-03	4.09E-01	1.02E-01
W-187	0.00E+00	0.00E+00	0.00E+00	0.00E+00	0.00E+00	0.00E+00	0.00E+00
Np-239	0.00E+00	0.00E+00	0.00E+00	0.00E+00	0.00E+00	0.00E+00	0.00E+00

REMP DOSE FACTORS FOR INFANT AGE GROUP: MILK (Page 1 of 2)

mrem-liter/pCi-yr

NUCLIDE	BONE	LIVER	T.BODY	THYROID	KIDNEY	LUNG	GI-LLI
H-3	0.00E+00	1.02E-04	1.02E-04	1.02E-04	1.02E-04	1.02E-04	1.02E-04
C-14	7.82E-03	1.67E-03	1.67E-03	1.67E-03	1.67E-03	1.67E-03	1.67E-03
Na-24	0.00E+00	0.00E+00	0.00E+00	0.00E+00	0.00E+00	0.00E+00	0.00E+00
P-32	5.09E-01	2.99E-02	1.97E-02	0.00E+00	0.00E+00	0.00E+00	6.89E-03
Cr-51	0.00E+00	0.00E+00	4.43E-06	2.89E-06	6.31E-07	5.62E-06	1.29E-04
Mn-54	0.00E+00	6.54E-03	1.48E-03	0.00E+00	1.45E-03	0.00E+00	2.40E-03
Mn-56	0.00E+00	0.00E+00	0.00E+00	0.00E+00	0.00E+00	0.00E+00	0.00E+00
Fe-55	4.58E-03	2.96E-03	7.91E-04	0.00E+00	0.00E+00	1.45E-03	3.76E-04
Fe-59	9.85E-03	1.72E-02	6.78E-03	0.00E+00	0.00E+00	5.09E-03	8.22E-03
Co-58	0.00E+00	1.16E-03	2.91E-03	0.00E+00	0.00E+00	0.00E+00	2.90E-03
Co-60	0.00E+00	3.56E-03	8.41E-03	0.00E+00	0.00E+00	0.00E+00	8.47E-03
Ni-63	2.09E-01	1.29E-02	7.26E-03	0.00E+00	0.00E+00	0.00E+00	6.43E-04
Ni-65	0.00E+00	0.00E+00	0.00E+00	0.00E+00	0.00E+00	0.00E+00	0.00E+00
Cu-64	0.00E+00	0.00E+00	0.00E+00	0.00E+00	0.00E+00	0.00E+00	0.00E+00
Zn-65	6.04E-03	2.07E-02	9.55E-03	0.00E+00	1.00E-02	0.00E+00	1.75E-02
Zn-69	0.00E+00	0.00E+00	0.00E+00	0.00E+00	0.00E+00	0.00E+00	0.00E+00
Br-83	0.00E+00	0.00E+00	0.00E+00	0.00E+00	0.00E+00	0.00E+00	0.00E+00
Br-84	0.00E+00	0.00E+00	0.00E+00	0.00E+00	0.00E+00	0.00E+00	0.00E+00
Br-85	0.00E+00	0.00E+00	0.00E+00	0.00E+00	0.00E+00	0.00E+00	0.00E+00
Rb-86	0.00E+00	5.21E-02	2.57E-02	0.00E+00	0.00E+00	0.00E+00	1.33E-03
Rb-88	0.00E+00	0.00E+00	0.00E+00	0.00E+00	0.00E+00	0.00E+00	0.00E+00
Rb-89	0.00E+00	0.00E+00	0.00E+00	0.00E+00	0.00E+00	0.00E+00	0.00E+00
Sr-89	8.06E-01	0.00E+00	2.31E-02	0.00E+00	0.00E+00	0.00E+00	1.66E-02
Sr-90	6.10E+00	0.00E+00	1.55E+00	0.00E+00	0.00E+00	0.00E+00	7.62E-02
Sr-91	0.00E+00	0.00E+00	0.00E+00	0.00E+00	0.00E+00	0.00E+00	0.00E+00
Sr-92	0.00E+00	0.00E+00	0.00E+00	0.00E+00	0.00E+00	0.00E+00	0.00E+00
Y-90	0.00E+00	0.00E+00	0.00E+00	0.00E+00	0.00E+00	0.00E+00	0.00E+00
Y-91m	0.00E+00	0.00E+00	0.00E+00	0.00E+00	0.00E+00	0.00E+00	0.00E+00
Y-91	3.64E-04	0.00E+00	9.70E-06	0.00E+00	0.00E+00	0.00E+00	2.61E-02
Y-92	0.00E+00	0.00E+00	0.00E+00	0.00E+00	0.00E+00	0.00E+00	0.00E+00
Y-93	0.00E+00	0.00E+00	0.00E+00	0.00E+00	0.00E+00	0.00E+00	0.00E+00
Zr-95	6.65E-05	1.62E-05	1.15E-05	0.00E+00	1.75E-05	0.00E+00	8.07E-03
Zr-97	0.00E+00	0.00E+00	0.00E+00	0.00E+00	0.00E+00	0.00E+00	0.00E+00
Nb-95	1.33E-05	5.49E-06	3.17E-06	0.00E+00	3.93E-06	0.00E+00	4.63E-03
Mo-99	0.00E+00	0.00E+00	0.00E+00	0.00E+00	0.00E+00	0.00E+00	0.00E+00
Tc-99m	0.00E+00	0.00E+00	0.00E+00	0.00E+00	0.00E+00	0.00E+00	0.00E+00

REMP DOSE FACTORS FOR INFANT AGE GROUP: MILK (Page 2 of 2)

mrem-liter/pCi-yr

NUCLIDE	BONE	LIVER	T.BODY	THYROID	KIDNEY	LUNG	GI-LLI
Tc-101	0.00E+00	0.00E+00	0.00E+00	0.00E+00	0.00E+00	0.00E+00	0.00E+00
Ru-103	4.71E-04	0.00E+00	1.58E-04	0.00E+00	9.81E-04	0.00E+00	5.73E-03
Ru-105	0.00E+00	0.00E+00	0.00E+00	0.00E+00	0.00E+00	0.00E+00	0.00E+00
Ru-106	7.92E-03	0.00E+00	9.90E-04	0.00E+00	9.37E-03	0.00E+00	6.02E-02
Ag-110m	3.27E-04	2.39E-04	1.58E-04	0.00E+00	3.41E-04	0.00E+00	1.24E-02
Te-125m	7.51E-03	2.51E-03	1.01E-03	2.53E-03	0.00E+00	0.00E+00	3.58E-03
Te-127m	1.91E-02	6.32E-03	2.31E-03	5.51E-03	4.69E-02	0.00E+00	7.69E-03
Te-127	0.00E+00	0.00E+00	0.00E+00	0.00E+00	0.00E+00	0.00E+00	0.00E+00
Te-129m	3.17E-02	1.09E-02	4.88E-03	1.22E-02	7.92E-02	0.00E+00	1.89E-02
Te-129	8.99E-05	3.10E-05	2.10E-05	7.54E-05	2.24E-04	0.00E+00	7.19E-03
Te-131m	0.00E+00	0.00E+00	0.00E+00	0.00E+00	0.00E+00	0.00E+00	0.00E+00
Te-131	0.00E+00	0.00E+00	0.00E+00	0.00E+00	0.00E+00	0.00E+00	0.00E+00
Te-132	0.00E+00	0.00E+00	0.00E+00	0.00E+00	0.00E+00	0.00E+00	0.00E+00
I-130	0.00E+00	0.00E+00	0.00E+00	0.00E+00	0.00E+00	0.00E+00	0.00E+00
I-131	9.97E-03	1.17E-02	5.17E-03	3.86E+00	1.37E-02	0.00E+00	4.19E-04
I-132	0.00E+00	0.00E+00	0.00E+00	0.00E+00	0.00E+00	0.00E+00	0.00E+00
I-133	0.00E+00	0.00E+00	0.00E+00	0.00E+00	0.00E+00	0.00E+00	0.00E+00
I-134	0.00E+00	0.00E+00	0.00E+00	0.00E+00	0.00E+00	0.00E+00	0.00E+00
I-135	0.00E+00	0.00E+00	0.00E+00	0.00E+00	0.00E+00	0.00E+00	0.00E+00
Cs-134	1.24E-01	2.32E-01	2.34E-02	0.00E+00	5.96E-02	2.44E-02	6.29E-04
Cs-136	1.36E-02	4.01E-02	1.50E-02	0.00E+00	1.60E-02	3.27E-03	6.09E-04
Cs-137	1.72E-01	2.02E-01	1.43E-02	0.00E+00	5.41E-02	2.19E-02	6.30E-04
Cs-138	0.00E+00	0.00E+00	0.00E+00	0.00E+00	0.00E+00	0.00E+00	0.00E+00
Ba-139	0.00E+00	0.00E+00	0.00E+00	0.00E+00	0.00E+00	0.00E+00	0.00E+00
Ba-140	5.06E-02	5.06E-05	2.61E-03	0.00E+00	1.20E-05	3.11E-05	1.24E-02
Ba-141	0.00E+00	0.00E+00	0.00E+00	0.00E+00	0.00E+00	0.00E+00	0.00E+00
Ba-142	0.00E+00	0.00E+00	0.00E+00	0.00E+00	0.00E+00	0.00E+00	0.00E+00
La-140	0.00E+00	0.00E+00	0.00E+00	0.00E+00	0.00E+00	0.00E+00	0.00E+00
La-142	0.00E+00	0.00E+00	0.00E+00	0.00E+00	0.00E+00	0.00E+00	0.00E+00
Ce-141	2.49E-05	1.52E-05	1.79E-06	0.00E+00	4.68E-06	0.00E+00	7.84E-03
Ce-143	0.00E+00	0.00E+00	0.00E+00	0.00E+00	0.00E+00	0.00E+00	0.00E+00
Ce-144	9.79E-04	4.01E-04	5.48E-05	0.00E+00	1.62E-04	0.00E+00	5.62E-02
Pr-143	2.42E-05	9.06E-06	1.20E-06	0.00E+00	3.37E-06	0.00E+00	1.28E-02
Pr-144	0.00E+00	0.00E+00	0.00E+00	0.00E+00	0.00E+00	0.00E+00	0.00E+00
Nd-147	1.61E-05	1.65E-05	1.01E-06	0.00E+00	6.37E-06	0.00E+00	1.05E-02
W-187	0.00E+00	0.00E+00	0.00E+00	0.00E+00	0.00E+00	0.00E+00	0.00E+00
Np-239	0.00E+00	0.00E+00	0.00E+00	0.00E+00	0.00E+00	0.00E+00	0.00E+00

REMP DOSE FACTORS FOR INFANT AGE GROUP: DRINKING WATER (Page 1 of 2)

mrem-liter/pCi-yr

NUCLIDE	BONE	LIVER	T.BODY	THYROID	KIDNEY	LUNG	GI-LLI
H-3	0.00E+00	1.02E-04	1.02E-04	1.02E-04	1.02E-04	1.02E-04	1.02E-04
C-14	7.82E-03	1.67E-03	1.67E-03	1.67E-03	1.67E-03	1.67E-03	1.67E-03
Na-24	1.91E-03	1.91E-03	1.91E-03	1.91E-03	1.91E-03	1.91E-03	1.91E-03
P-32	5.48E-01	3.22E-02	2.12E-02	0.00E+00	0.00E+00	0.00E+00	7.41E-03
Cr-51	0.00E+00	0.00E+00	4.60E-06	3.00E-06	6.55E-07	5.83E-06	1.34E-04
Mn-54	0.00E+00	6.56E-03	1.49E-03	0.00E+00	1.45E-03	0.00E+00	2.41E-03
Mn-56	0.00E+00	1.07E-05	1.85E-06	0.00E+00	9.22E-06	0.00E+00	9.74E-04
Fe-55	4.59E-03	2.96E-03	7.92E-04	0.00E+00	0.00E+00	1.45E-03	3.76E-04
Fe-59	1.01E-02	1.76E-02	6.94E-03	0.00E+00	0.00E+00	5.21E-03	8.42E-03
Co-58	0.00E+00	1.18E-03	2.95E-03	0.00E+00	0.00E+00	0.00E+00	2.95E-03
Co-60	0.00E+00	3.56E-03	8.41E-03	0.00E+00	0.00E+00	0.00E+00	8.48E-03
Ni-63	2.09E-01	1.29E-02	7.26E-03	0.00E+00	0.00E+00	0.00E+00	6.43E-04
Ni-65	5.72E-05	6.47E-06	2.94E-06	0.00E+00	0.00E+00	0.00E+00	4.93E-04
Cu-64	0.00E+00	1.04E-04	4.83E-05	0.00E+00	1.77E-04	0.00E+00	2.14E-03
Zn-65	6.06E-03	2.08E-02	9.59E-03	0.00E+00	1.01E-02	0.00E+00	1.76E-02
Zn-69	3.96E-09	7.13E-09	5.31E-10	0.00E+00	2.96E-09	0.00E+00	5.82E-07
Br-83	0.00E+00	0.00E+00	3.69E-06	0.00E+00	0.00E+00	0.00E+00	0.00E+00
Br-84	0.00E+00	0.00E+00	1.99E-11	0.00E+00	0.00E+00	0.00E+00	0.00E+00
Br-85	0.00E+00	0.00E+00	0.00E+00	0.00E+00	0.00E+00	0.00E+00	0.00E+00
Rb-86	0.00E+00	5.51E-02	2.72E-02	0.00E+00	0.00E+00	0.00E+00	1.41E-03
Rb-88	0.00E+00	1.16E-16	6.35E-17	0.00E+00	0.00E+00	0.00E+00	1.13E-16
Rb-89	0.00E+00	9.23E-19	6.36E-19	0.00E+00	0.00E+00	0.00E+00	3.14E-19
Sr-89	8.23E-01	0.00E+00	2.36E-02	0.00E+00	0.00E+00	0.00E+00	1.69E-02
Sr-90	6.10E+00	0.00E+00	1.55E+00	0.00E+00	0.00E+00	0.00E+00	7.62E-02
Sr-91	6.87E-03	0.00E+00	2.49E-04	0.00E+00	0.00E+00	0.00E+00	8.14E-03
Sr-92	2.94E-04	0.00E+00	1.09E-05	0.00E+00	0.00E+00	0.00E+00	3.17E-03
Y-90	2.52E-05	0.00E+00	6.75E-07	0.00E+00	0.00E+00	0.00E+00	3.48E-02
Y-91m	1.19E-11	0.00E+00	4.06E-13	0.00E+00	0.00E+00	0.00E+00	3.97E-08
Y-91	3.71E-04	0.00E+00	9.87E-06	0.00E+00	0.00E+00	0.00E+00	2.66E-02
Y-92	2.41E-07	0.00E+00	6.77E-09	0.00E+00	0.00E+00	0.00E+00	4.60E-03
Y-93	3.52E-06	0.00E+00	9.59E-08	0.00E+00	0.00E+00	0.00E+00	2.78E-02
Zr-95	6.76E-05	1.65E-05	1.17E-05	0.00E+00	1.78E-05	0.00E+00	8.21E-03
Zr-97	2.99E-06	5.12E-07	2.34E-07	0.00E+00	5.16E-07	0.00E+00	3.27E-02
Nb-95	1.37E-05	5.65E-06	3.27E-06	0.00E+00	4.05E-06	0.00E+00	4.77E-03
Mo-99	0.00E+00	9.89E-03	1.93E-03	0.00E+00	1.48E-02	0.00E+00	3.26E-03
Tc-99m	1.59E-07	3.28E-07	4.23E-06	0.00E+00	3.53E-06	1.72E-07	9.53E-05

REMP DOSE FACTORS FOR INFANT AGE GROUP: DRINKING WATER (Page 2 of 2)

mrem-liter/pCi-yr

NUCLIDE	BONE	LIVER	T.BODY	THYROID	KIDNEY	LUNG	GI-LLI
Tc-101	4.38E-22	5.52E-22	5.46E-21	0.00E+00	6.56E-21	3.01E-22	9.38E-20
Ru-103	4.84E-04	0.00E+00	1.62E-04	0.00E+00	1.01E-03	0.00E+00	5.89E-03
Ru-105	6.89E-06	0.00E+00	2.32E-06	0.00E+00	5.07E-05	0.00E+00	2.74E-03
Ru-106	7.95E-03	0.00E+00	9.92E-04	0.00E+00	9.40E-03	0.00E+00	6.03E-02
Ag-110m	3.28E-04	2.40E-04	1.59E-04	0.00E+00	3.43E-04	0.00E+00	1.24E-02
Te-125m	7.64E-03	2.56E-03	1.03E-03	2.57E-03	0.00E+00	0.00E+00	3.64E-03
Te-127m	1.92E-02	6.38E-03	2.33E-03	5.56E-03	4.74E-02	0.00E+00	7.76E-03
Te-127	1.36E-04	4.54E-05	2.91E-05	1.10E-04	3.31E-04	0.00E+00	2.85E-03
Te-129m	3.27E-02	1.12E-02	5.03E-03	1.25E-02	8.17E-02	0.00E+00	1.95E-02
Te-129	9.28E-05	3.20E-05	2.17E-05	7.77E-05	2.31E-04	0.00E+00	7.41E-03
Te-131m	3.80E-03	1.53E-03	1.26E-03	3.10E-03	1.05E-02	0.00E+00	2.58E-02
Te-131	1.29E-13	4.78E-14	3.63E-14	1.15E-13	3.31E-13	0.00E+00	5.22E-12
Te-132	6.17E-03	3.06E-03	2.85E-03	4.51E-03	1.91E-02	0.00E+00	1.13E-02
I-130	1.01E-03	2.22E-03	8.92E-04	2.49E-01	2.44E-03	0.00E+00	4.76E-04
I-131	1.13E-02	1.34E-02	5.88E-03	4.39E+00	1.56E-02	0.00E+00	4.77E-04
I-132	1.47E-05	2.99E-05	1.06E-05	1.40E-03	3.34E-05	0.00E+00	2.42E-05
I-133	2.77E-03	4.03E-03	1.18E-03	7.32E-01	4.73E-03	0.00E+00	6.81E-04
I-134	2.21E-08	4.54E-08	1.61E-08	1.06E-06	5.07E-08	0.00E+00	4.69E-08
I-135	3.41E-04	6.79E-04	2.48E-04	6.08E-02	7.57E-04	0.00E+00	2.46E-04
Cs-134	1.24E-01	2.32E-01	2.34E-02	0.00E+00	5.97E-02	2.45E-02	6.30E-04
Cs-136	1.48E-02	4.34E-02	1.62E-02	0.00E+00	1.73E-02	3.54E-03	6.59E-04
Cs-137	1.72E-01	2.02E-01	1.43E-02	0.00E+00	5.41E-02	2.19E-02	6.30E-04
Cs-138	3.04E-11	4.94E-11	2.40E-11	0.00E+00	2.47E-11	3.85E-12	7.90E-11
Ba-139	7.25E-07	4.81E-10	2.10E-08	0.00E+00	2.89E-10	2.91E-10	4.59E-05
Ba-140	5.49E-02	5.49E-05	2.83E-03	0.00E+00	1.30E-05	3.37E-05	1.35E-02
Ba-141	2.03E-16	1.39E-19	6.40E-18	0.00E+00	8.36E-20	8.45E-20	2.48E-15
Ba-142	0.00E+00	0.00E+00	0.00E+00	0.00E+00	0.00E+00	0.00E+00	1.52E-24
La-140	5.66E-06	2.23E-06	5.74E-07	0.00E+00	0.00E+00	0.00E+00	2.62E-02
La-142	1.96E-09	7.20E-10	1.72E-10	0.00E+00	0.00E+00	0.00E+00	1.22E-04
Ce-141	2.57E-05	1.57E-05	1.84E-06	0.00E+00	4.83E-06	0.00E+00	8.10E-03
Ce-143	3.80E-06	2.52E-03	2.87E-07	0.00E+00	7.34E-07	0.00E+00	1.47E-02
Ce-144	9.82E-04	4.02E-04	5.50E-05	0.00E+00	1.62E-04	0.00E+00	5.64E-02
Pr-143	2.62E-05	9.78E-06	1.30E-06	0.00E+00	3.63E-06	0.00E+00	1.38E-02
Pr-144	2.74E-20	1.06E-20	1.38E-21	0.00E+00	3.85E-21	0.00E+00	4.94E-16
Nd-147	1.77E-05	1.82E-05	1.11E-06	0.00E+00	7.00E-06	0.00E+00	1.15E-02
W-187	2.10E-04	1.46E-04	5.05E-05	0.00E+00	0.00E+00	0.00E+00	8.59E-03
Np-239	3.16E-06	2.83E-07	1.60E-07	0.00E+00	5.64E-07	0.00E+00	8.17E-03

REMP DOSE FACTORS FOR INFANT AGE GROUP:INHALATION - QUARTERLY SAMPLING (Page 1 of 2)

mrem-m^3/pCi-yr

NUCLIDE	BONE	LIVER	T.BODY	THYROID	KIDNEY	LUNG	GI-LLI
H-3	0.00E+00	6.51E-04	6.51E-04	6.51E-04	6.51E-04	6.51E-04	6.51E-04
C-14	2.65E-02	5.31E-03	5.31E-03	5.31E-03	5.31E-03	5.31E-03	5.31E-03
Na-24	0.00E+00	0.00E+00	0.00E+00	0.00E+00	0.00E+00	0.00E+00	0.00E+00
P-32	1.86E+01	1.03E+00	7.08E-01	0.00E+00	0.00E+00	0.00E+00	1.47E-01
Cr-51	0.00E+00	0.00E+00	2.80E-04	1.80E-04	4.14E-05	4.02E-02	1.12E-03
Mn-54	0.00E+00	2.80E-02	5.51E-03	0.00E+00	5.51E-03	1.11E+00	7.81E-03
Mn-56	0.00E+00	0.00E+00	0.00E+00	0.00E+00	0.00E+00	0.00E+00	0.00E+00
Fe-55	2.04E-02	1.21E-02	3.44E-03	0.00E+00	0.00E+00	8.98E-02	1.13E-03
Fe-59	2.76E-02	4.78E-02	1.93E-02	0.00E+00	0.00E+00	2.06E+00	5.03E-02
Co-58	0.00E+00	1.91E-03	2.84E-03	0.00E+00	0.00E+00	1.21E+00	1.74E-02
Co-60	0.00E+00	8.15E-03	1.20E-02	0.00E+00	0.00E+00	4.58E+00	3.24E-02
Ni-63	3.39E-01	2.05E-02	1.16E-02	0.00E+00	0.00E+00	2.09E-01	2.42E-03
Ni-65	0.00E+00	0.00E+00	0.00E+00	0.00E+00	0.00E+00	0.00E+00	0.00E+00
Cu-64	0.00E+00	0.00E+00	0.00E+00	0.00E+00	0.00E+00	0.00E+00	0.00E+00
Zn-65	2.20E-02	7.12E-02	3.54E-02	0.00E+00	3.70E-02	7.36E-01	5.85E-02
Zn-69	0.00E+00	0.00E+00	0.00E+00	0.00E+00	0.00E+00	0.00E+00	0.00E+00
Br-83	0.00E+00	0.00E+00	0.00E+00	0.00E+00	0.00E+00	0.00E+00	0.00E+00
Br-84	0.00E+00	0.00E+00	0.00E+00	0.00E+00	0.00E+00	0.00E+00	0.00E+00
Br-85	0.00E+00	0.00E+00	0.00E+00	0.00E+00	0.00E+00	0.00E+00	0.00E+00
Rb-86	0.00E+00	1.04E+00	4.80E-01	0.00E+00	0.00E+00	0.00E+00	1.65E-02
Rb-88	0.00E+00	0.00E+00	0.00E+00	0.00E+00	0.00E+00	0.00E+00	0.00E+00
Rb-89	0.00E+00	0.00E+00	0.00E+00	0.00E+00	0.00E+00	0.00E+00	0.00E+00
Sr-89	7.43E-01	0.00E+00	2.13E-02	0.00E+00	0.00E+00	3.79E+00	1.20E-01
Sr-90	4.10E+01	0.00E+00	2.60E+00	0.00E+00	0.00E+00	1.13E+01	1.31E-01
Sr-91	0.00E+00	0.00E+00	0.00E+00	0.00E+00	0.00E+00	0.00E+00	0.00E+00
Sr-92	0.00E+00	0.00E+00	0.00E+00	0.00E+00	0.00E+00	0.00E+00	0.00E+00
Y-90	0.00E+00	0.00E+00	0.00E+00	0.00E+00	0.00E+00	0.00E+00	0.00E+00
Y-91m	0.00E+00	0.00E+00	0.00E+00	0.00E+00	0.00E+00	0.00E+00	0.00E+00
Y-91	1.01E+00	0.00E+00	2.69E-02	0.00E+00	0.00E+00	4.21E+00	1.21E-01
Y-92	0.00E+00	0.00E+00	0.00E+00	0.00E+00	0.00E+00	0.00E+00	0.00E+00
Y-93	0.00E+00	0.00E+00	0.00E+00	0.00E+00	0.00E+00	0.00E+00	0.00E+00
Zr-95	1.89E-01	4.57E-02	3.33E-02	0.00E+00	5.09E-02	2.87E+00	3.56E-02
Zr-97	0.00E+00	0.00E+00	0.00E+00	0.00E+00	0.00E+00	0.00E+00	0.00E+00
Nb-95	3.86E-02	1.58E-02	9.32E-03	0.00E+00	1.16E-02	1.18E+00	3.12E-02
Mo-99	0.00E+00	0.00E+00	0.00E+00	0.00E+00	0.00E+00	0.00E+00	0.00E+00
Tc-99m	0.00E+00	0.00E+00	0.00E+00	0.00E+00	0.00E+00	0.00E+00	0.00E+00

REMP DOSE FACTORS FOR INFANT AGE GROUP: INHALATION - QUARTERLY SAMPLING (Page 2 of 2)

mrem-m^3/pCi-yr

NUCLIDE	BONE	LIVER	T.BODY	THYROID	KIDNEY	LUNG	GI-LLI
Tc-101	0.00E+00	0.00E+00	0.00E+00	0.00E+00	0.00E+00	0.00E+00	0.00E+00
Ru-103	4.50E-03	0.00E+00	1.52E-03	0.00E+00	9.48E-03	1.23E+00	3.60E-02
Ru-105	0.00E+00	0.00E+00	0.00E+00	0.00E+00	0.00E+00	0.00E+00	0.00E+00
Ru-106	9.46E-02	0.00E+00	1.19E-02	0.00E+00	1.16E-01	1.26E+01	1.78E-01
Ag-110m	1.13E-02	8.20E-03	5.67E-03	0.00E+00	1.24E-02	4.16E+00	3.75E-02
Te-125m	8.21E-03	3.43E-03	1.14E-03	2.80E-03	0.00E+00	7.70E-01	2.23E-02
Te-127m	2.23E-02	9.23E-03	2.77E-03	6.51E-03	5.01E-02	1.75E+00	3.65E-02
Te-127	0.00E+00	0.00E+00	0.00E+00	0.00E+00	0.00E+00	0.00E+00	0.00E+00
Te-129m	3.62E-02	1.56E-02	5.71E-03	1.40E-02	8.15E-02	4.31E+00	1.77E-01
Te-129	2.02E-07	8.90E-08	4.81E-08	1.73E-07	4.49E-07	7.68E-03	6.75E-02
Te-131m	0.00E+00	0.00E+00	0.00E+00	0.00E+00	0.00E+00	0.00E+00	0.00E+00
Te-131	0.00E+00	0.00E+00	0.00E+00	0.00E+00	0.00E+00	0.00E+00	0.00E+00
Te-132	0.00E+00	0.00E+00	0.00E+00	0.00E+00	0.00E+00	0.00E+00	0.00E+00
I-130	0.00E+00	0.00E+00	0.00E+00	0.00E+00	0.00E+00	0.00E+00	0.00E+00
I-131	3.79E-02	4.44E-02	1.96E-02	1.48E+01	5.18E-02	0.00E+00	1.06E-03
I-132	0.00E+00	0.00E+00	0.00E+00	0.00E+00	0.00E+00	0.00E+00	0.00E+00
I-133	0.00E+00	0.00E+00	0.00E+00	0.00E+00	0.00E+00	0.00E+00	0.00E+00
I-134	0.00E+00	0.00E+00	0.00E+00	0.00E+00	0.00E+00	0.00E+00	0.00E+00
I-135	0.00E+00	0.00E+00	0.00E+00	0.00E+00	0.00E+00	0.00E+00	0.00E+00
Cs-134	4.13E-01	7.33E-01	7.77E-02	0.00E+00	1.99E-01	8.31E-02	1.39E-03
Cs-136	5.34E-01	1.49E+00	5.85E-01	0.00E+00	6.24E-01	1.30E-01	1.58E-02
Cs-137	5.50E-01	6.14E-01	4.56E-02	0.00E+00	1.73E-01	7.15E-02	1.34E-03
Cs-138	0.00E+00	0.00E+00	0.00E+00	0.00E+00	0.00E+00	0.00E+00	0.00E+00
Ba-139	0.00E+00	0.00E+00	0.00E+00	0.00E+00	0.00E+00	0.00E+00	0.00E+00
Ba-140	6.64E-01	6.64E-04	3.44E-02	0.00E+00	1.59E-04	1.89E+01	4.55E-01
Ba-141	0.00E+00	0.00E+00	0.00E+00	0.00E+00	0.00E+00	0.00E+00	0.00E+00
Ba-142	0.00E+00	0.00E+00	0.00E+00	0.00E+00	0.00E+00	0.00E+00	0.00E+00
La-140	0.00E+00	0.00E+00	0.00E+00	0.00E+00	0.00E+00	0.00E+00	0.00E+00
La-142	0.00E+00	0.00E+00	0.00E+00	0.00E+00	0.00E+00	0.00E+00	0.00E+00
Ce-141	7.33E-02	4.41E-02	5.26E-03	0.00E+00	1.39E-02	1.37E+00	5.70E-02
Ce-143	0.00E+00	0.00E+00	0.00E+00	0.00E+00	0.00E+00	0.00E+00	0.00E+00
Ce-144	3.57E+00	1.35E+00	1.97E-01	0.00E+00	6.01E-01	1.10E+01	1.66E-01
Pr-143	1.44E-01	5.39E-02	7.20E-03	0.00E+00	2.03E-02	4.46E+00	3.84E-01
Pr-144	0.00E+00	0.00E+00	0.00E+00	0.00E+00	0.00E+00	0.00E+00	0.00E+00
Nd-147	1.41E-01	1.45E-01	8.91E-03	0.00E+00	5.61E-02	5.74E+00	5.56E-01
W-187	0.00E+00	0.00E+00	0.00E+00	0.00E+00	0.00E+00	0.00E+00	0.00E+00
Np-239	0.00E+00	0.00E+00	0.00E+00	0.00E+00	0.00E+00	0.00E+00	0.00E+00

REMP DOSE FACTORS FOR INFANT AGE GROUP: INHALATION - WEEKLY SAMPLING (Page 1 of 2)

mrem-m^3/pCi-yr

NUCLIDE	BONE	LIVER	T.BODY	THYROID	KIDNEY	LUNG	GI-LLI
H-3	0.00E+00	6.47E-04	6.47E-04	6.47E-04	6.47E-04	6.47E-04	6.47E-04
C-14	2.65E-02	5.31E-03	5.31E-03	5.31E-03	5.31E-03	5.31E-03	5.31E-03
Na-24	0.00E+00	0.00E+00	0.00E+00	0.00E+00	0.00E+00	0.00E+00	0.00E+00
P-32	2.41E+00	1.33E-01	9.17E-02	0.00E+00	0.00E+00	0.00E+00	1.91E-02
Cr-51	0.00E+00	0.00E+00	9.76E-05	6.28E-05	1.44E-05	1.40E-02	3.90E-04
Mn-54	0.00E+00	2.55E-02	5.02E-03	0.00E+00	5.02E-03	1.01E+00	7.11E-03
Mn-56	0.00E+00	0.00E+00	0.00E+00	0.00E+00	0.00E+00	0.00E+00	0.00E+00
Fe-55	1.98E-02	1.18E-02	3.34E-03	0.00E+00	0.00E+00	8.72E-02	1.10E-03
Fe-59	1.43E-02	2.48E-02	1.00E-02	0.00E+00	0.00E+00	1.07E+00	2.62E-02
Co-58	0.00E+00	1.26E-03	1.88E-03	0.00E+00	0.00E+00	8.04E-01	1.15E-02
Co-60	0.00E+00	8.03E-03	1.18E-02	0.00E+00	0.00E+00	4.51E+00	3.20E-02
Ni-63	3.39E-01	2.04E-02	1.16E-02	0.00E+00	0.00E+00	2.09E-01	2.42E-03
Ni-65	0.00E+00	0.00E+00	0.00E+00	0.00E+00	0.00E+00	0.00E+00	0.00E+00
Cu-64	0.00E+00	0.00E+00	0.00E+00	0.00E+00	0.00E+00	0.00E+00	0.00E+00
Zn-65	1.95E-02	6.32E-02	3.14E-02	0.00E+00	3.28E-02	6.53E-01	5.19E-02
Zn-69	0.00E+00	0.00E+00	0.00E+00	0.00E+00	0.00E+00	0.00E+00	0.00E+00
Br-83	0.00E+00	0.00E+00	0.00E+00	0.00E+00	0.00E+00	0.00E+00	0.00E+00
Br-84	0.00E+00	0.00E+00	0.00E+00	0.00E+00	0.00E+00	0.00E+00	0.00E+00
Br-85	0.00E+00	0.00E+00	0.00E+00	0.00E+00	0.00E+00	0.00E+00	0.00E+00
Rb-86	0.00E+00	2.17E-01	1.00E-01	0.00E+00	0.00E+00	0.00E+00	3.46E-03
Rb-88	0.00E+00	0.00E+00	0.00E+00	0.00E+00	0.00E+00	0.00E+00	0.00E+00
Rb-89	0.00E+00	0.00E+00	0.00E+00	0.00E+00	0.00E+00	0.00E+00	0.00E+00
Sr-89	4.17E-01	0.00E+00	1.20E-02	0.00E+00	0.00E+00	2.13E+00	6.71E-02
Sr-90	4.09E+01	0.00E+00	2.59E+00	0.00E+00	0.00E+00	1.12E+01	1.31E-01
Sr-91	0.00E+00	0.00E+00	0.00E+00	0.00E+00	0.00E+00	0.00E+00	0.00E+00
Sr-92	0.00E+00	0.00E+00	0.00E+00	0.00E+00	0.00E+00	0.00E+00	0.00E+00
Y-90	0.00E+00	0.00E+00	0.00E+00	0.00E+00	0.00E+00	0.00E+00	0.00E+00
Y-91m	0.00E+00	0.00E+00	0.00E+00	0.00E+00	0.00E+00	0.00E+00	0.00E+00
Y-91	6.13E-01	0.00E+00	1.63E-02	0.00E+00	0.00E+00	2.55E+00	7.33E-02
Y-92	0.00E+00	0.00E+00	0.00E+00	0.00E+00	0.00E+00	0.00E+00	0.00E+00
Y-93	0.00E+00	0.00E+00	0.00E+00	0.00E+00	0.00E+00	0.00E+00	0.00E+00
Zr-95	1.20E-01	2.89E-02	2.11E-02	0.00E+00	3.23E-02	1.82E+00	2.25E-02
Zr-97	0.00E+00	0.00E+00	0.00E+00	0.00E+00	0.00E+00	0.00E+00	0.00E+00
Nb-95	1.68E-02	6.89E-03	4.05E-03	0.00E+00	5.06E-03	5.13E-01	1.36E-02
Mo-99	0.00E+00	0.00E+00	0.00E+00	0.00E+00	0.00E+00	0.00E+00	0.00E+00
Tc-99m	0.00E+00	0.00E+00	0.00E+00	0.00E+00	0.00E+00	0.00E+00	0.00E+00

REMP DOSE FACTORS FOR INFANT AGE GROUP: INHALATION - WEEKLY SAMPLING (Page 2 of 2)

mrem-m^3/pCi-yr

NUCLIDE	BONE	LIVER	T.BODY	THYROID	KIDNEY	LUNG	GI-LLI
Tc-101	0.00E+00	0.00E+00	0.00E+00	0.00E+00	0.00E+00	0.00E+00	0.00E+00
Ru-103	2.14E-03	0.00E+00	7.22E-04	0.00E+00	4.51E-03	5.87E-01	1.71E-02
Ru-105	0.00E+00	0.00E+00	0.00E+00	0.00E+00	0.00E+00	0.00E+00	0.00E+00
Ru-106	8.74E-02	0.00E+00	1.09E-02	0.00E+00	1.07E-01	1.16E+01	1.65E-01
Ag-110m	1.01E-02	7.29E-03	5.05E-03	0.00E+00	1.10E-02	3.70E+00	3.34E-02
Te-125m	4.96E-03	2.07E-03	6.86E-04	1.69E-03	0.00E+00	4.66E-01	1.35E-02
Te-127m	1.70E-02	7.06E-03	2.12E-03	4.98E-03	3.84E-02	1.34E+00	2.79E-02
Te-127	0.00E+00	0.00E+00	0.00E+00	0.00E+00	0.00E+00	0.00E+00	0.00E+00
Te-129m	1.52E-02	6.55E-03	2.39E-03	5.88E-03	3.42E-02	1.81E+00	7.42E-02
Te-129	8.47E-08	3.73E-08	2.02E-08	7.25E-08	1.88E-07	3.22E-03	2.83E-02
Te-131m	0.00E+00	0.00E+00	0.00E+00	0.00E+00	0.00E+00	0.00E+00	0.00E+00
Te-131	0.00E+00	0.00E+00	0.00E+00	0.00E+00	0.00E+00	0.00E+00	0.00E+00
Te-132	0.00E+00	0.00E+00	0.00E+00	0.00E+00	0.00E+00	0.00E+00	0.00E+00
I-130	0.00E+00	0.00E+00	0.00E+00	0.00E+00	0.00E+00	0.00E+00	0.00E+00
I-131	3.79E-02	4.44E-02	1.96E-02	1.48E+01	5.18E-02	0.00E+00	1.06E-03
I-132	0.00E+00	0.00E+00	0.00E+00	0.00E+00	0.00E+00	0.00E+00	0.00E+00
I-133	0.00E+00	0.00E+00	0.00E+00	0.00E+00	0.00E+00	0.00E+00	0.00E+00
I-134	0.00E+00	0.00E+00	0.00E+00	0.00E+00	0.00E+00	0.00E+00	0.00E+00
I-135	0.00E+00	0.00E+00	0.00E+00	0.00E+00	0.00E+00	0.00E+00	0.00E+00
Cs-134	3.97E-01	7.05E-01	7.47E-02	0.00E+00	1.91E-01	7.99E-02	1.34E-03
Cs-136	5.81E-02	1.62E-01	6.36E-02	0.00E+00	6.78E-02	1.41E-02	1.72E-03
Cs-137	5.49E-01	6.12E-01	4.55E-02	0.00E+00	1.72E-01	7.13E-02	1.33E-03
Cs-138	0.00E+00	0.00E+00	0.00E+00	0.00E+00	0.00E+00	0.00E+00	0.00E+00
Ba-139	0.00E+00	0.00E+00	0.00E+00	0.00E+00	0.00E+00	0.00E+00	0.00E+00
Ba-140	6.77E-02	6.77E-05	3.50E-03	0.00E+00	1.62E-05	1.93E+00	4.64E-02
Ba-141	0.00E+00	0.00E+00	0.00E+00	0.00E+00	0.00E+00	0.00E+00	0.00E+00
Ba-142	0.00E+00	0.00E+00	0.00E+00	0.00E+00	0.00E+00	0.00E+00	0.00E+00
La-140	0.00E+00	0.00E+00	0.00E+00	0.00E+00	0.00E+00	0.00E+00	0.00E+00
La-142	0.00E+00	0.00E+00	0.00E+00	0.00E+00	0.00E+00	0.00E+00	0.00E+00
Ce-141	2.99E-02	1.80E-02	2.14E-03	0.00E+00	5.66E-03	5.57E-01	2.32E-02
Ce-143	0.00E+00	0.00E+00	0.00E+00	0.00E+00	0.00E+00	0.00E+00	0.00E+00
Ce-144	3.22E+00	1.22E+00	1.78E-01	0.00E+00	5.42E-01	9.93E+00	1.50E-01
Pr-143	1.67E-02	6.26E-03	8.35E-04	0.00E+00	2.36E-03	5.17E-01	4.45E-02
Pr-144	0.00E+00	0.00E+00	0.00E+00	0.00E+00	0.00E+00	0.00E+00	0.00E+00
Nd-147	9.90E-03	1.01E-02	6.23E-04	0.00E+00	3.93E-03	4.02E-01	3.89E-02
W-187	0.00E+00	0.00E+00	0.00E+00	0.00E+00	0.00E+00	0.00E+00	0.00E+00
Np-239	0.00E+00	0.00E+00	0.00E+00	0.00E+00	0.00E+00	0.00E+00	0.00E+00

REMP DOSE FACTORS FOR ADULT AGE GROUP: SHORELINE/SEDIMENT TOTAL BODY AND SKIN DOSE

mrem-kg/pCi-yr

NUCLIDE	T.BODY	SKIN	NUCLIDE	T.BODY	SKIN
H-3	0.00E+00	0.00E+00	Ru-103	6.91E-07	8.06E-07
C-14	0.00E+00	0.00E+00	Ru-105	8.64E-07	9.79E-07
Na-24	4.80E-06	5.57E-06	Ru-106	2.88E-07	3.46E-07
P-32	0.00E+00	0.00E+00	Ag-110m	3.46E-06	4.03E-06
Cr-51	4.22E-08	4.99E-08	Te-125m	6.72E-09	9.22E-09
Mn-54	1.11E-06	1.31E-06	Te-127m	2.11E-10	2.50E-10
Mn-56	2.11E-06	2.50E-06	Te-127	1.92E-09	2.11E-09
Fe-55	0.00E+00	0.00E+00	Te-129m	1.48E-07	1.73E-07
Fe-59	1.54E-06	1.80E-06	Te-129	1.36E-07	1.61E-07
Co-58	1.34E-06	1.57E-06	Te-131m	1.61E-06	1.90E-06
Co-60	3.26E-06	3.84E-06	Te-131	4.22E-07	4.99E-04
Ni-63	0.00E+00	0.00E+00	Te-132	3.26E-07	3.84E-07
Ni-65	7.10E-07	8.26E-07	I-130	2.69E-06	3.26E-06
Cu-64	3.05E-07	3.26E-07	I-131	5.38E-07	6.53E-07
Zn-65	7.68E-07	8.83E-07	I-132	3.26E-06	3.84E-06
Zn-69	0.00E+00	0.00E+00	I-133	7.10E-07	8.64E-07
Br-83	1.23E-08	1.79E-08	I-134	3.07E-06	3.65E-06
Br-84	2.30E-06	2.69E-06	I-135	2.30E-06	2.69E-06
Br-85	0.00E+00	0.00E+00	Cs-134	2.30E-06	2.69E-06
Rb-86	1.21E-07	1.38E-07	Cs-136	2.88E-06	3.26E-06
Rb-88	6.72E-07	7.68E-07	Cs-137	8.06E-07	9.41E-07
Rb-89	2.88E-06	3.46E-06	Cs-138	4.03E-06	4.61E-06
Sr-89	1.08E-10	1.25E-10	Ba-139	4.61E-07	5.18E-07
Sr-90	0.00E+00	0.00E+00	Ba-140	4.03E-07	4.61E-07
Sr-91	1.36E-06	1.59E-06	Ba-141	8.26E-07	9.41E-07
Sr-92	1.73E-06	1.92E-06	Ba-142	1.52E-06	1.73E-06
Y-90	4.22E-10	4.99E-10	La-140	2.88E-06	3.26E-06
Y-91m	7.30E-07	8.45E-07	La-142	2.88E-06	3.46E-06
Y-91	4.61E-09	5.18E-09	Ce-141	1.06E-07	1.19E-07
Y-92	3.07E-07	3.65E-07	Ce-143	4.22E-07	4.80E-07
Y-93	1.09E-07	1.50E-07	Ce-144	6.14E-08	7.10E-08
Zr-95	9.60E-07	1.11E-06	Pr-143	0.00E+00	0.00E+00
Zr-97	1.06E-06	1.23E-06	Pr-144	3.84E-08	4.42E-08
Nb-95	9.79E-07	1.15E-06	Nd-147	1.92E-07	2.30E-07
Mo-99	3.65E-07	4.22E-07	W-187	5.95E-07	6.91E-07
Tc-99m	1.84E-07	2.11E-07	Np-239	1.82E-07	2.11E-07
Tc-101	5.18E-07	5.76E-07			

REMP DOSE FACTORS FOR TEEN AGE GROUP:SHORELINE/SEDIMENT TOTAL BODY AND SKIN DOSE

mrem-kg/pCi-yr

NUCLIDE	T.BODY	SKIN	NUCLIDE	T.BODY	SKIN
H-3	0.00E+00	0.00E+00	Ru-103	3.86E-06	4.50E-06
C-14	0.00E+00	0.00E+00	Ru-105	4.82E-06	5.47E-06
Na-24	2.68E-05	3.11E-05	Ru-106	1.61E-06	1.93E-06
P-32	0.00E+00	0.00E+00	Ag-110m	1.93E-05	2.25E-05
Cr-51	2.36E-07	2.79E-07	Te-125m	3.75E-08	5.15E-08
Mn-54	6.22E-06	7.29E-06	Te-127m	1.18E-09	1.39E-09
Mn-56	1.18E-05	1.39E-05	Te-127	1.07E-08	1.18E-08
Fe-55	0.00E+00	0.00E+00	Te-129m	8.25E-07	9.65E-07
Fe-59	8.58E-06	1.01E-05	Te-129	7.61E-07	9.00E-07
Co-58	7.50E-06	8.79E-06	Te-131m	9.00E-06	1.06E-05
Co-60	1.82E-05	2.14E-05	Te-131	2.36E-06	2.79E-03
Ni-63	0.00E+00	0.00E+00	Te-132	1.82E-06	2.14E-06
Ni-65	3.97E-06	4.61E-06	I-130	1.50E-05	1.82E-05
Cu-64	1.70E-06	1.82E-06	I-131	3.00E-06	3.64E-06
Zn-65	4.29E-06	4.93E-06	I-132	1.82E-05	2.14E-05
Zn-69	0.00E+00	0.00E+00	I-133	3.97E-06	4.82E-06
Br-83	6.86E-08	9.97E-08	I-134	1.72E-05	2.04E-05
Br-84	1.29E-05	1.50E-05	I-135	1.29E-05	1.50E-05
Br-85	0.00E+00	0.00E+00	Cs-134	1.29E-05	1.50E-05
Rb-86	6.75E-07	7.72E-07	Cs-136	1.61E-05	1.82E-05
Rb-88	3.75E-06	4.29E-06	Cs-137	4.50E-06	5.25E-06
Rb-89	1.61E-05	1.93E-05	Cs-138	2.25E-05	2.57E-05
Sr-89	6.00E-10	6.97E-10	Ba-139	2.57E-06	2.89E-06
Sr-90	0.00E+00	0.00E+00	Ba-140	2.25E-06	2.57E-06
Sr-91	7.61E-06	8.90E-06	Ba-141	4.61E-06	5.25E-06
Sr-92	9.65E-06	1.07E-05	Ba-142	8.47E-06	9.65E-06
Y-90	2.36E-09	2.79E-09	La-140	1.61E-05	1.82E-05
Y-91m	4.07E-06	4.72E-06	La-142	1.61E-05	1.93E-05
Y-91	2.57E-08	2.89E-08	Ce-141	5.90E-07	6.65E-07
Y-92	1.72E-06	2.04E-06	Ce-143	2.36E-06	2.68E-06
Y-93	6.11E-07	8.36E-07	Ce-144	3.43E-07	3.97E-07
Zr-95	5.36E-06	6.22E-06	Pr-143	0.00E+00	0.00E+00
Zr-97	5.90E-06	6.86E-06	Pr-144	2.14E-07	2.47E-07
Nb-95	5.47E-06	6.43E-06	Nd-147	1.07E-06	1.29E-06
Mo-99	2.04E-06	2.36E-06	W-187	3.32E-06	3.86E-06
Tc-99m	1.03E-06	1.18E-06	Np-239	1.02E-06	1.18E-06
Tc-101	2.89E-06	3.22E-06			

REMP DOSE FACTORS FOR CHILD AGE GROUP: SHORELINE/SEDIMENT TOTAL BODY AND SKIN DOSE

mrem-kg/pCi-yr

NUCLIDE	T.BODY	SKIN	NUCLIDE	T.BODY	SKIN
H-3	0.00E+00	0.00E+00	Ru-103	8.06E-07	9.41E-07
C-14	0.00E+00	0.00E+00	Ru-105	1.01E-06	1.14E-06
Na-24	5.60E-06	6.50E-06	Ru-106	3.36E-07	4.03E-07
P-32	0.00E+00	0.00E+00	Ag-110m	4.03E-06	4.70E-06
Cr-51	4.93E-08	5.82E-08	Te-125m	7.84E-09	1.08E-08
Mn-54	1.30E-06	1.52E-06	Te-127m	2.46E-10	2.91E-10
Mn-56	2.46E-06	2.91E-06	Te-127	2.24E-09	2.46E-09
Fe-55	0.00E+00	0.00E+00	Te-129m	1.72E-07	2.02E-07
Fe-59	1.79E-06	2.11E-06	Te-129	1.59E-07	1.88E-07
Co-58	1.57E-06	1.84E-06	Te-131m	1.88E-06	2.22E-06
Co-60	3.81E-06	4.48E-06	Te-131	4.93E-07	5.82E-04
Ni-63	0.00E+00	0.00E+00	Te-132	3.81E-07	4.48E-07
Ni-65	8.29E-07	9.63E-07	I-130	3.14E-06	3.81E-06
Cu-64	3.56E-07	3.81E-07	I-131	6.27E-07	7.62E-07
Zn-65	8.96E-07	1.03E-06	I-132	3.81E-06	4.48E-06
Zn-69	0.00E+00	0.00E+00	I-133	8.29E-07	1.01E-06
Br-83	1.43E-08	2.08E-08	I-134	3.58E-06	4.26E-06
Br-84	2.69E-06	3.14E-06	I-135	2.69E-06	3.14E-06
Br-85	0.00E+00	0.00E+00	Cs-134	2.69E-06	3.14E-06
Rb-86	1.41E-07	1.61E-07	Cs-136	3.36E-06	3.81E-06
Rb-88	7.84E-07	8.96E-07	Cs-137	9.41E-07	1.10E-06
Rb-89	3.36E-06	4.03E-06	Cs-138	4.70E-06	5.38E-06
Sr-89	1.25E-10	1.46E-10	Ba-139	5.38E-07	6.05E-07
Sr-90	0.00E+00	0.00E+00	Ba-140	4.70E-07	5.38E-07
Sr-91	1.59E-06	1.86E-06	Ba-141	9.63E-07	1.10E-06
Sr-92	2.02E-06	2.24E-06	Ba-142	1.77E-06	2.02E-06
Y-90	4.93E-10	5.82E-10	La-140	3.36E-06	3.81E-06
Y-91m	8.51E-07	9.86E-07	La-142	3.36E-06	4.03E-06
Y-91	5.38E-09	6.05E-09	Ce-141	1.23E-07	1.39E-07
Y-92	3.58E-07	4.26E-07	Ce-143	4.93E-07	5.60E-07
Y-93	1.28E-07	1.75E-07	Ce-144	7.17E-08	8.29E-08
Zr-95	1.12E-06	1.30E-06	Pr-143	0.00E+00	0.00E+00
Zr-97	1.23E-06	1.43E-06	Pr-144	4.48E-08	5.15E-08
Nb-95	1.14E-06	1.34E-06	Nd-147	2.24E-07	2.69E-07
Mo-99	4.26E-07	4.93E-07	W-187	6.94E-07	8.06E-07
Tc-99m	2.15E-07	2.46E-07	Np-239	2.13E-07	2.46E-07
Tc-101	6.05E-07	6.72E-07			

CONSOLIDATED DOSE CALCULATIONS

Equations 1 – 4 in Section 6.0 of ODCM-QA-008 consolidate the methodology of Regulatory Guide (RG) 1.109 (Ref. 3.1). Equations 1, 3, and 4 are related to Equation A-1 of Appendix A to Revision 1 of RG 1.109. This equation is a generalized equation for calculating the radiation dose to man via liquid effluent pathways. Equation A-1 is expressed as follows:

$$R_{aipj} = C_{ip} U_{ap} D_{aipj}$$

Where

R_{aipj} is the annual dose to organ j of an individual of age group a from nuclide i via pathway p, in mrem/yr;

C_{ip} is the concentration of nuclide i in the media of pathway p, in pCi/l, pCi/kg, or pCi/m^3;

U_{ap} is the exposure time or intake rate (usage) associated with pathway p for age group a, in hr/yr or kg/yr (as appropriate); and

D_{aipj} is the dose factor, specific to age group a, radionuclide i, pathway p, and organ j. It represents the dose due to the intake of a radionuclide, in mrem/pCi, or from exposure to a given concentration of a radionuclide in sediment, in mrem per hr/pCi per m^2.

C_{ip} of Equation A-1 corresponds to the RES_{REMP}, and R_{aipj} corresponds to $D_{REMP/ING}$, $D_{REMP/TB}$, and $D_{REMP/SKIN}$ of Equations 1, 3, and 4.

The major differences between Equation A-1 and Equations 1, 3 and 4 of Section 6.0 of ODCM-QA-008 are as follows:

1. As shown in EC-ENVR-1027 (Ref. 3.13), the dose factors ($D_{CALC/ING}$, $D_{CALC/TB}$, and $D_{CALC/SKIN}$) of Equations 1, 3, and 4 in Section 6.0 of ODCM-QA-008 incorporate both the usage factor, U_{ap}, and the dose factor, D_{aipj} found in equation A-1 from RG 1.109.

2. $D_{CALC/TB}$, & $D_{CALC/SKIN}$ of Equations 3 and 4 from the ODCM have been modified by an assumed areal density (80 kg/m$^{2)}$ for the first two inches of sediment to accommodate activity concentrations for sediment expressed in pCi/kg.

3. In addition to the variables already discussed, all three of the ODCM equations incorporate the variable F_{SAMP} to account for consumption periods (e.g., water and fish) or exposure times (shoreline sediment) less than one year. This is necessary because the dose factors, D_{aipj}, from RG 1.109 used by EC-ENVR-1027 for the derivation of $D_{CALC/ING}$, $D_{CALC/TB}$, & $D_{CALC/SKIN}$ are based on continuous intakes or exposures over a one-year period. However, activity concentrations for REMP samples may represent consumption or exposure periods of a week, two weeks, a month, a quarter, or in exceptional cases periods of other duration less than one year.

4. As shown in EC-ENVR-1027, the dose factors of Equation 1 for certain media monitored by the REMP, such as monthly composited drinking water samples, incorporate an additional factor not included in Equation A-1. This additional factor calculates the dose from activity concentrations that might be consumed at the midpoint of the compositing period rather than the end of the period.

Equation 1 in Section 6.0 of ODCM-QA-008 may also be used to determine doses associated with the airborne exposure pathway resulting from the ingestion of such foods as milk, fruits, and vegetables. The use of Equation 1 for this purpose is similar to the intended use of Equation C-13 in Appendix C of RG 1.109 (Ref. 3.1). Equation C-13 is expressed as follows:

$$D_{ja}^{D}(r,\theta)=\sum_{i} D\ F\ I_{ija}\left[U_a^v f_g C_i^v(r,\theta)+U_a^m C_i^m(r,\theta)+U_a^F C_i^F(r,\theta)+U_a^L f_l C_i^L(r,\theta)\right]$$

Where

$D_{ja}(r,\theta)$ is the annual dose to organ j of an individual of age group a from the dietary intake of atmospherically released radionuclides, in mrem/yr for sector θ at distance r;

C_i is the concentration of nuclide i in produce, milk, meat or leafy vegetables, in pCi/l or pCi/kg for sector θ at distance r;

U_a are the ingestion rates of produce, milk, meat, or leafy vegetables, respectively for individuals in age group a, in l/yr or kg/yr (as appropriate);

DFI_{ija} is the dose conversion factor for the ingestion of nuclide i, organ j and age group a, in mrem/pCi; and

$f_{g,l}$ are fractions that may be assumed to represent the portion of the total of that food product that is radiologically contaminated which is consumed during the period of interest.

C_i of Equation C-13 corresponds to the RES_{REMP}, and DFI_{ija} corresponds to $D_{REMP/ING}$, of Equation 1 as it applies to food products containing radionuclides from the airborne pathway.

The major differences between Equation C-13 and Equation 1 of Section 6.0 of ODCM-QA-008 are as follows:

1. Equation C-13 was formulated to calculate the total dose from the consumption of various foods (produce, milk, meat, and leafy vegetables) and radionuclides simultaneously, whereas Equation 1 is intended to calculate the doses separately for each item of food and each radionuclide.

2. Equation C-13, similar to Equation A-1 discussed above, states usage factors and other factors for ingestion separately while equation 1 has incorporated these factors into the dose factors presented in the tables of Attachments D through H of ODCM-QA-008. This is shown in EC-ENVR-1027 (Ref. 3.13)

3. In addition to the variables already discussed for Equation C-13, Equation 1 of the ODCM incorporates the variable F_{SAMP} to account for consumption periods (e.g., milk and produce) less than one year. This is necessary because the dose factors, DFI_{ija}, from RG 1.109 used by EC-ENVR-1027 for the derivation of $D_{CALC/ING}$ are based on continuous intakes over a one year period. However, activity concentrations for REMP samples may represent consumption or exposure periods of a week, two weeks, a month, a quarter, or in exceptional cases periods of other duration less than one year.

Equation 2 in Section 6.0 of ODCM-QA-008 may also be used to determine doses associated with the inhalation of radionuclides. The use of Equation 2 for this purpose is similar to the intended use of Equation C-4 in Appendix C of RG 1.109 (Ref. 3.1). Equation C-4 is expressed as follows:

$$D^{A}_{ja}(r,\theta) = R_a \sum_i \chi_i(r,\theta)\, DFA_{ija}$$

Where

D_{ja}	is the annual dose in mrem/yr associated with inhalation of all radionuclides, to organ j of an individual in age group a
R_a	is the inhalation rate in m^3/yr for the appropriate age group
$\chi_i(r,\theta)$	is the annual average ground-level concentration of nuclide i in air in sector θ at distance *r*, in pCi/m^3
DFA_{ija}	is the dose conversion factor for the inhalation of nuclide i, organ j and age group a, in mrem/pCi;

χ_i of Equation C-4 corresponds to the RES_{REMP}, and DFA_{ija} corresponds to $D_{REMP/INH}$, of Equation 2 as it applies to the inhalation of air containing radionuclides.

The major differences between Equation C-4 and Equation 2 of Section 6.0 of ODCM-QA-008 are as follows:

1. Equation C-4 was formulated to calculate the total dose from inhalation of multiple radionuclides at different concentrations simultaneously, whereas Equation 2 is intended to calculate the doses separately for each radionuclide and concentration.

2. Equation C-4 states breathing rates for inhalation separately, while Equation 2 has incorporated these into the dose factors presented in the tables of Attachments D through H of ODCM-QA-008. This is shown in EC-ENVR-1027 (Ref. 3.13)

3. In addition to the variables already discussed for equation C-4, Equation 2 of the ODCM incorporates the variable F_{SAMP} to account for consumption inhalation periods less than one year. This is necessary because the dose factors, DFA_{ija}, from RG 1.109 used by EC-ENVR-1027 for the derivation of $D_{CALC/INH}$ is based on continuous inhalation over a one-year period. However, activity concentrations for REMP air samples may represent inhalation periods of a week, a quarter, or in exceptional cases periods of other duration less than one year.

4. As shown in EC-ENVR-1027, the dose factors of Equation 2 incorporate an additional factor not included in Equation C-4. This additional factor calculates the dose from activity concentrations that might be consumed at the midpoint of a quarterly compositing period rather than the end of the period.

PROCEDURE COVER SHEET

PPL SUSQUEHANNA, LLC	NUCLEAR DEPARTMENT PROCEDURE	
DOSE ASSESSMENT POLICY STATEMENTS		ODCM-QA-009 Revision 2 Page 1 of 11

QUALITY CLASSIFICATION:	APPROVAL CLASSIFICATION:
☒ QA Program ☐ Non-QA Program	☒ Plant ☐ Non-Plant ☐ Instruction

EFFECTIVE DATE: 3-18-2003

PERIODIC REVIEW FREQUENCY: N/A

PERIODIC REVIEW DUE DATE: N/A

RECOMMENDED REVIEWS:

Nuclear Emergency Planning

Procedure Owner: Francis J. Hickey

Responsible Supervisor: Chemistry Support Supervisor - SSES

Responsible FUM: Chemistry Supervisor - SSES

Responsible Approver: Vice President – Nuclear Operations

CONTROLLED

PROCEDURE REVISION SUMMARY

TITLE: DOSE ASSESSMENT POLICY STATEMENTS

The revision provides direction regarding identification of radionuclides in the sewage treatment plant waste sludge and or liquid effluent. The revision provides clarification in order to evaluate the impact of non-SSES generated isotopes identified in the sewage treatment plant sludge and liquid effluent relative to liquid effluent regulatory compliance and the disposition of sewage treatment plant sludge. The revision does not change any limits or analyses. Thus, Revision 2 of ODCM-QA-009 maintains the level of radioactive effluent control required pursuant to 10CFR20.1302, 40CFR190, 10CFR50.36a and Appendix I to 10CFR50 and does not impact the accuracy or reliability of effluent, dose, or setpoint calculations.

In addition, these changes (1) do not alter the conduct of the radiological environmental monitoring program; (2) do not change radiological environmental monitoring activities; and (3) do not change the information to be included in the Annual Radiological Environmental Operating or Radioactive Effluent Release Reports.

Incorporated PCAF 2002-1697, and added Nuclear Emergency Planning as a recommended reviewer.

TABLE OF CONTENTS

SECTION		PAGE
1.0	PURPOSE	4
2.0	POLICY/DISCUSSION	4
2.1	Evaluation and Monitoring Criteria for Effluent Pathways	4
2.2	Low-Level Radioactivity in the Sewage Treatment Plant	5
3.0	REFERENCES	6
4.0	RESPONSIBILITIES	7
4.1	Chemistry Supervisor - SSES	7
5.0	DEFINITIONS	7
6.0	PROCEDURE	8
7.0	RECORDS	8

ATTACHMENTS

ATTACHMENT		PAGE
A	Systems Classified as Insignificant Effluent Pathway	9
B	Systems Classified as Significant Effluent Pathway	10
C	Systems with NRC I/E Bulletin 80-10 Applicability	11

1.0 PURPOSE

The purpose of this procedure is to state dose and effluent policy statements that are not directly associated with any other section of the ODCM.

This procedure constitutes part of the SSES Offsite Dose Calculation Manual (ODCM) which is a licensing basis document.

2.0 POLICY/DISCUSSION

2.1 Evaluation and Monitoring Criteria for Effluent Pathways

2.1.1 Potential effluent pathways will be evaluated on a case-by-case basis. The evaluation will include identification of systems which are normally non-radioactive (as described in the FSAR) but could possibly become radioactive through interfaces with radioactive systems (Reference: NRC IE Bulletin No. 80-10). The evaluation will determine the significance of any potential effluent pathways and extent of sampling and/or monitoring required. The frequency of sampling or monitoring will be determined based on the potential for contamination, the potential for inadvertent releases, the potential levels of contamination and releases, and the potential impact on station offsite doses.

2.1.2 Results of sampling and/or evaluation will be used to classify systems into one of the following categories:

a. Not an Effluent Pathway

b. Insignificant Effluent Pathway

c. Significant Effluent Pathway

d. Systems with NRC I/E Bulletin 80-10 Applicability

Listings of systems classified as Insignificant or Significant Effluent Pathways or have 80-10 applicability are provided in Attachments A, B, and C, respectively.

2.1.3 Certain holding tanks for liquids and/or sludges that are not physically connected to radioactively contaminated systems also could become radioactively contaminated if they were to receive and concentrate radioactive materials from undetectable to detectable levels. All such tanks/vessels that receive/collect materials that have been in the station's Radiologically Controlled Areas, that allow these materials to contact liquids, and from which the liquid contents of the tanks could be released to the environment should be considered as 80-10 systems.

All 80-10 systems shall be sampled and analyzed for radioactivity periodically in accordance with station procedures. If an 80-10 system becomes radioactively contaminated, a Condition Report (CR) shall be initiated. Further use of the system shall be evaluated and documented in Operability Assessments in response to the CR.

Compensatory measures, if any, shall be subject to 50.59 screening and/or evaluation.

If the resolution of the Condition Report is to continue operation of the system as contaminated (i.e., "use-as-is"), this shall require the performance of a 50.59 and 72.48 screening and/or evaluation.

2.1.4 Positively detected radioactive material in samples collected from all airborne and waterborne offsite release pathways will be reported in the Annual Effluent and Waste Disposal Report.

2.2 Low-Level Radioactivity in the Sewage Treatment Plant (STP)

2.2.1 Sewage processing facilities, such as the SSES sewage treatment plant, can under certain unusual conditions become contaminated with licensee generated radioactive materials (NRC IN 88-22).

2.2.2 Sewage treatment plant sludge is typically shipped to, and disposed of at, an offsite facility. The following guidelines have been established to support the disposal of sewage treatment sludge:

a. Sludge collected for disposal at an offsite facility should be sampled and analyzed to environmental LLD criteria, to quantify any radioactivity present above natural background levels prior to free release.

b. When sludge is determined to be contaminated with radionuclides generated from SSES operations, which have half-lives sufficiently long to make hold-up for decay impractical, the following options should be considered:

(1) Dispose of the sludge as low level radioactive waste.

(2) Obtain a special permit pursuant to the requirements of 10 CFR 20.2002.

c. The sewage treatment plant liquid effluent should be sampled monthly for radioactivity.

2.2.3 A common source term for radionuclides identified in the STP is when individuals who work on-site have been subjected to the medical administration of radio-pharmaceuticals for diagnostic or therapeutic purposes. In these cases, normal biological elimination processes can

easily result in levels of radioactivity in sewage treatment plant solutions and suspensions that are within the detection capabilities of the associated sampling and analysis program. Naturally occurring background radioisotopes and weapons testing fallout radioisotopes may also be identified in STP effluents or sludge. The radionuclides referenced above (naturally occurring, weapons testing fallout, medical) can be eliminated from consideration (regarding radioactive liquid effluent compliance or free release of sludge) once a determination has been made and documented that the source of the radionuclides is not due to SSES operations (i.e., licensee byproduct material).

3.0 REFERENCES

3.1 10CFR20.2002, Method for Obtaining Approval of Proposed Disposal Procedures

3.2 10CFR20 Appendix B, Annual Limits on Intake (ALIs) and Derived Concentrations (DACs) of Radionuclides for Occupational Exposure; Effluent Concentrations; Concentrations for Release to Sewerage

3.3 10CFR50 Appendix I, Numerical Guides for Design Objectives and Limiting Conditions for Operation to Meet the Criterion "As Low as is Reasonably Achievable" for Radioactive Material in Light-water Cooled Nuclear Power Reactor Effluents

3.4 10CFR50.59, Changes, Tests, and Experiments

3.5 NRC IE Bulletin No. 80-10, Contamination of Nonradioactive System and Resulting Potential for Unmonitored, Uncontrolled Release of Radioactivity to Environment

3.6 FSAR Section 11.2, Liquid Waste Management Systems

3.7 FSAR Section 11.3, Gaseous Waste Management Systems

3.8 ODCM-QA-003, Effluent Monitor Setpoints

3.9 PP&L Calculation EC-ENVR-1008, Unmonitored Release Analysis: Systems Identified in PLI-77223

3.10 Safety Evaluation NL-92-007, Operation of LLRWHF at SSES

3.11 Safety Evaluation NL-95-001, Refueling Outage Decay Heat Removal and Tie-In of the SDHR Temporary Cooling Equipment

3.12 Safety Evaluation NL-95-015, Operation of the Sewage Treatment Plant with Sludge Activity Above Environmental LLDs

3.13 PLI-77223, Letter from D. L. Hagan to K. E. Shank, "Potential Unmonitored Release Assessment"

3.14 NDAP-QA-1180, Radiological Effluent Monitoring and Control

3.15 NRC Generic Letter No. 91-18, Revision 1; Information to Licensees Regarding NRC Inspection Manual Section on Resolution of Degraded and Nonconforming Conditions, October 8, 1997

3.16 Condition Report #95876

3.17 Unit 1 and Unit 2 Technical Requirements Manual

3.18 PLI-86027, Insignificant Pathway – Noble Gas Entrained in Liquid Effluent

3.19 Condition Report #457463 and Action Request #457461

3.20 NRC IN 88-22

4.0 RESPONSIBILITIES

4.1 Chemistry Supervisor - SSES

4.1.1 Ensures adequacy and correctness of dose and effluent policy statements.

4.1.2 Ensures effluent pathways are properly evaluated based on calculations or other appropriate methods.

5.0 DEFINITIONS

5.1 Insignificant Effluent Pathway - Evaluation and/or periodic sampling demonstrate that the pathway may contain radioactive effluents, however, these effluents may not be reasonably expected to exceed 10 times the appropriate unrestricted area EC value (fractional ECs summed when appropriate) listed in Table 2 of Appendix B to 10 CFR 20. A release pathway which falls in this category will be sampled periodically.

5.2 ECL - Effluent Concentration Limit as defined in 10CFR20, Appendix B.

5.3 Not An Effluent Pathway - Realistic evaluation (e.g., engineering design, system operation, radionuclide inventory) demonstrates that the pathway has no potential for release of radioactive material. Although not required, periodic sampling may at times be performed to confirm the result of the evaluation.

5.4 Significant Effluent Pathway - Evaluation and/or periodic sampling demonstrate that the pathway may contain radioactive effluents, and these effluents may be reasonably expected to exceed 10 times the appropriate unrestricted area EC value (fractional ECs summed when appropriate) listed in Table 2 of Appendix B to 10 CFR 20. Significant Effluent Pathways are not always sampled continuously. They will be sampled and/or monitored continuously except where TRO Action Statements allow something different. Monitoring will occur in accordance with TR requirements.

5.5 80-10 Systems are those systems considered as non-radioactive (or described as non-radioactive in the FSAR), which could become radioactive through interfaces with radioactive systems (a non-radioactive system that could become contaminated due to leakage, valving errors, or other operating conditions in the radioactive systems). These normally non-radioactive systems are considered 80-10 Systems in accordance with NRC IE Bulletin 80-10 if they have both a potential for radioactive contamination and a release pathway to the environment. Monitoring systems or sample analysis must be capable of detecting the Effluent Lower Limits of Detection (LLDs) referenced in the TRM.

6.0 PROCEDURE

Chemistry Support shall perform dose calculations as required to support classification of effluent pathways. Use may be made of incoming requests for revision of the ODCM, or other relevant information that may be received from Nuclear Engineering or other PPL Susquehanna, LLC groups.

7.0 RECORDS

None.

SYSTEMS CLASSIFIED AS INSIGNIFICANT EFFLUENT PATHWAY

SYSTEM NO.	DESCRIPTION	REFERENCE
037B	Condensate Storage and Transfer	1
037D	Refueling Storage and Transfer	1
048	RFPT Lube Oil	1
095	H_2 Seal Oil	1
093	Main Turbine Lube Oil	1
099D	Sewage Treatment Plant	2
040	Batch Lube Oil Tank	3
–	Noble Gas Entrained in Liquid Effluent	4

Notes:

1. PP&L Calculation EC-ENVR-1008

2. Sewage treatment plant is designed to be operated as a non-radioactive system. Classification as an Insignificant Effluent Pathway is in accordance with Safety Evaluation NL-95-015

3. PLI-77223

4. PLI-86027 dated July 24, 1998, Insignificant Effluent Pathway – Noble Gas Entrained in Liquid Effluent

SYSTEMS CLASSIFIED AS SIGNIFICANT EFFLUENT PATHWAY

SYSTEM NO.	DESCRIPTION	REFERENCE
069	Liquid Waste Management Systems	1
068	Solid Radwaste Processing Systems	3
072	Offgas System	2
012F	Unit 1 and Unit 2 Reactor Building Vents	2
012B	Unit 1 and Unit 2 Turbine Building Vents	2
070	Standby Gas Treatment System Vent	2

Notes:

1. SSES FSAR Chapter 11.2
2. SSES FSAR Chapter 11.3
3. SSES FSAR Chapter 11.4

SYSTEMS WITH NRC I/E BULLETIN 80-10 APPLICABILITY

SYSTEM NO.	DESCRIPTION	REFERENCE
011	Service Water (F/P HTX Discharge)	1
016	RHR Service Water	1
018	Instrument Air	1
019	Service Air	1
022	Makeup Demineralizers	
027	Station Auxiliary Boiler/Auxiliary Steam	1
011	Shutdown Decay Heat Removal Service Water	3
042	Circulating Water	
054	Emergency Service Water	1
086	Low Level Radwaste Handling Facility	2

Notes:

1. PLI-77223
2. Safety Evaluation NL-92-007, Rev. 2, Operation of LLRWHF at SSES
3. Safety Evaluation NL-95-001, Rev. 2

3.11 Radioactive Effluents

3.11.1 Liquid Effluents

3.11.1.1 Liquid Effluents Concentration

TRO 3.11.1.1 The concentration of radioactive material released in liquid effluents to UNRESTRICTED AREAS (See FSAR Section 2.1.1.3) shall be limited to 10 times the concentrations specified in Appendix B, Table 2, Column 2 to 10CFR 20.1001-20.2402 for radionuclides other than dissolved or entrained noble gases. For dissolved or entrained noble gases, the concentration shall be limited to 2E-4 µCi/ml total activity.

APPLICABILITY: At all times.

ACTIONS

CONDITION	REQUIRED ACTION	COMPLETION TIME
A. Concentration of radioactive material released in liquid effluents to UNRESTRICTED AREAS (See FSAR Section 2.1.1.3) exceeds the limits specified in TRO 3.11.1.1	A1. Restore the concentration to within the above limits	Immediately

TECHNICAL REQUIREMENT SURVEILLANCE

SURVEILLANCE		FREQUENCY
TRS 3.11.1.1.1	The radioactivity content of each batch of radioactive liquid waste shall be determined by sampling and analysis in accordance with Table 3.11.1.1-1. The results of pre-release analyses shall be used with the calculational methods and parameters in the ODCM to assure that the concentration at the point of release is maintained within the limits of TRO 3.11.1.1	Prior to each release
TRS 3.11.1.1.2	Post release analyses of samples composited from batch releases shall be performed in accordance with Table 3.11.1.1-1. The results of the previous post-release analyses shall be used with the calculational methods and parameters in the ODCM to assure that the concentrations at the point of release were maintained within the limits of TRO 3.11.1.1	According to the ODCM

TABLE 3.11.1.1-1
RADIOACTIVE LIQUID WASTE SAMPLING AND ANALYSIS PROGRAM

Liquid Release Type	Sampling Frequency	Minimum Analysis Frequency	Type of Activity Analysis	Lower Limit of Detection (LLD) (μCi/ml)
Batch Waste Release Tanks	Prior to Release Each Batch	Prior to release Each Batch	Principal Gamma Emitters	5E-7
			I-131	1E-6
	Prior to Release One Batch per month	31 days	Dissolved and Entrained Gases (Gamma Emitters)	1E-5
	Prior to Release Each Batch	31 days Composite[a]	H-3	1E-5
			Gross Alpha	1E-7
	Prior to Release Each Batch	92 days Composite[a]	Sr-89, Sr-90	5E-8
			Fe-55	1E-6

[a] Minimum frequency for initiation of required analysis.

3.11. Radioactive Effluents

3.11.1 Liquid Effluents

3.11.1.2 Liquid Effluents Dose

TRO 3.11.1.2 The dose or dose commitment to a MEMBER OF THE PUBLIC from radioactive materials in liquid effluents released from each reactor unit to UNRESTRICTED AREAS shall be limited:

a. During any calendar quarter to less than or equal to 1.5 mrems to the total body and to less than or equal to 5 mrems to any organ.

AND

b. During any calendar year to less than or equal to 3.0 mrems to the total body and to less than or equal to 10 mrems to any organ.

APPLICABILITY: At all times.

ACTIONS

CONDITION	REQUIRED ACTION	COMPLETION TIME
A. Calculated dose from the release of radioactive materials in liquid effluents exceeding any of the above limits	A1. Prepare and submit a Special Report to the Commission	Within 30 days

TECHNICAL REQUIREMENT SURVEILLANCE

SURVEILLANCE	FREQUENCY
TRS 3.11.1.2.1 Determine cumulative dose contributions from liquid effluents for the current calendar quarter and the current calendar year in accordance with methodology and parameters in the ODCM	31 days

3.11 Radioactive Effluents

3.11.1 Liquid Effluents

3.11.1.3 Liquid Waste Treatment System

TRO 3.11.1.3 The appropriate portions of the Liquid Radwaste Treatment System, as described in the ODCM, shall be OPERABLE. Appropriate portions of the Liquid Waste Treatment System shall be used to reduce the radioactive materials in liquid effluent, prior to their discharge, when projected doses due to liquid effluent releases from each reactor unit to UNRESTRICTED AREAS would exceed 0.06 mrem to the total body or 0.2 mrem to any organ in a 31 day period.

APPLICABILITY: At all times.

ACTIONS

CONDITION	REQUIRED ACTION	COMPLETION TIME
A. Liquid effluent releases being discharged without treatment and in excess of the TRO limit.	A1. Prepare and submit a Special Report to the Commission	30 days

TECHNICAL REQUIREMENT SURVEILLANCE

SURVEILLANCE		FREQUENCY
TRS 3.11.1.3.1	Project doses due to liquid releases from each reactor unit to UNRESTRICTED AREAS in accordance with the methodology and parameters in the ODCM.	31 days
TRS 3.11.1.3.2	----------NOTE---------- Not required to be performed if the liquid radwaste system has been utilized to process radioactive liquid during the previous 92 days ---------- Demonstrate the Liquid Radwaste (LRW) Treatment System OPERABLE by operating LRW Treatment System equipment for at least 10 minutes.	92 days

3.11 Radioactive Effluents

3.11.1 Liquid Effluents

3.11.1.4 Liquid Radwaste Effluent Monitoring Instrumentation

TRO 3.11.1.4 The Radioactive Liquid Radwaste Effluent Monitoring Instrumentation channels shown in Table 3.11.1.4-1 shall be OPERABLE with their setpoints established in accordance with the ODCM to ensure that the alarm/trip will occur prior to exceeding the limits of TRO 3.11.1.1.

APPLICABILITY: At all times.

ACTIONS

----------NOTE----------

1. Separate condition entry is allowed for each channel
2. The provisions of TRO 3.0.4 are not applicable

CONDITION	REQUIRED ACTION	COMPLETION TIME
A. One or more radioactive liquid effluent monitoring instrumentation alarm/trip channels setpoint less conservative than the limits allowed by TRO 3.11.1.1	A.1 Suspend the release of radioactive liquid effluents monitored by the affected channel	Immediately
	OR	
	A.2 Declare the channel inoperable	Immediately

(continued)

ACTIONS (continued)

CONDITION	REQUIRED ACTION	COMPLETION TIME
B. Liquid Radwaste releases are necessary and Effluent Line Gross Radioactivity Monitoring Instrumentation inoperable.	B.1 Analyze at least two independent samples in accordance with TRO 3.11.1.1	Prior to initiating each release.
	AND	
	B.2 Independently determine release rates for samples analyzed per Action B.1	Prior to initiating each release.
	AND	
	B.3 Perform and independently verify discharge valve lineup	Prior to initiating each release.
	AND	
	B.4 Restore monitoring instrumentation	14 days
C. Liquid Radwaste releases are not in progress and the Gross Radioactivity Monitoring instrumentation is inoperable because the inoperable channel is caused by a discharge valve interlock in an off-normal condition or not functioning.	C.1 Maintain at least one isolation valve closed between each source of release and the liquid radwaste discharge valve.	Within 1 hour of securing from release or discovery of inoperable instrument.

(continued)

ACTIONS (continued)

CONDITION	REQUIRED ACTION	COMPLETION TIME
D. Liquid Radwaste releases are necessary and Effluent Line or Cooling Tower Blowdown Flow Monitoring Instrumentation inoperable.	D.1 Estimate Flow Rate. AND D.2 Restore Monitoring Instrumentation.	Once per 4 hours during releases. 30 days
E. Liquid Radwaste releases are not in progress and cooling tower blowdown flow monitoring instrumentation is inoperable because the inoperable channel is a discharge valve interlock in an off-normal condition or not functioning.	E.1 Maintain at least one isolation valve closed between each source of release and the liquid radwaste discharge valve.	Within 1 hour of securing release or discovery of inoperable instrument.
F. Required Action and Associated Completion Time of Conditions B, C, D, or E not met.	F.1 --------NOTE---------- Only applicable to Condition B ---------- Suspend release of radioactive effluents via this pathway AND F.2 Explain why the inoperability was not corrected in a timely manner	Immediately In the next Annual Radioactive Effluent Release Report per TS Section 5.6

TECHNICAL REQUIREMENT SURVEILLANCE

----------NOTE----------
Refer to Table 3.11.1.4-1 to determine which TRSs apply for each Monitoring Function.

SURVEILLANCE		FREQUENCY
TRS 3.11.1.4.1	Perform CHANNEL CHECK.	24 hours
TRS 3.11.1.4.2	Perform CHANNEL CHECK including a source check.	Prior to commencing release
TRS 3.11.1.4.3	Perform CHANNEL FUNCTIONAL TEST	92 days
TRS 3.11.1.4.4	Perform CHANNEL CALIBRATION	24 months

TABLE 3.11.1.4-1
LIQUID RADWASTE EFFLUENT MONITORING INSTRUMENTATION

FUNCTION	REQUIRED CHANNELS	SURVEILLANCE REQUIREMENTS
1. GROSS RADIOACTIVITY MONITORS PROVIDING AUTOMATIC TERMINATION OF RELEASE		
a. Liquid Radwaste Effluent Line	1	TRS 3.11.1.4.2 TRS 3.11.1.4.3 TRS 3.11.1.4.4
2. FLOW RATE MEASUREMENT DEVICES		
a. Liquid Radwaste Effluent Line	1	TRS 3.11.1.4.1[a] TRS 3.11.1.4.3 TRS 3.11.1.4.4
b. Cooling Tower Blowdown	1	TRS 3.11.1.4.1[a] TRS 3.11.1.4.3 TRS 3.11.1.4.4

[a] Only required when performing batch releases.

3.11 Radioactive Effluents

3.11.1 Liquid Effluents

3.11.1.5 Radioactive Liquid Process Monitoring Instrumentation

TRO 3.11.1.5 The Radioactive Liquid Process Monitoring Instrumentation channels shown in Table 3.11.1.5-1 shall be OPERABLE with their setpoints established in accordance with the ODCM to ensure the alarm will occur prior to exceeding the limits of TRO 3.11.1.1.

APPLICABILITY: As specified in Table 3.11.1.5-1.

ACTIONS

----------NOTE----------

1. Separate condition entry is allowed for each channel
2. The provisions of TRO 3.0.4 are not applicable

CONDITION	REQUIRED ACTION	COMPLETION TIME
A. One or more Radioactive Liquid Process Monitoring Instrumentation alarm/trip channels setpoint less conservative than the limits allowed by TRO 3.11.1.1.	A.1 Suspend the release of liquid effluents monitored by the affected channel	Immediately
	OR	
	A.2 Declare the channel inoperable	Immediately

(continued)

ACTIONS (continued)

CONDITION	REQUIRED ACTION	COMPLETION TIME
B. Radioactive Liquid Process Monitoring Instrumentation otherwise inoperable.	B.1.1 Suspend the release of liquid effluents monitored by the affected channel.	Immediately
	OR	
	B.1.2 Analyze grab samples for isotopic activity to the required LLDs for liquid effluents (Table 3.11.1.1-1).	Once per 8 hours when the associated pathway is in service
	AND	
	B.2 Restore monitoring instrumentation	30 days
C. Required Action and Associated Completion Time of Conditions B not met.	C.1 Explain why the inoperability was not corrected in a timely manner	In the next Annual Radioactive Effluent Release Report per TS Section 5.6
D. RHR Heat Exchanger to be drained to the spray pond.	D.1 Analyze grab samples from the RHR Heat Exchanger for isotopic activity to the required LLDs for liquid effluents (Table 3.11.1.1-1).	Prior to draining RHR Heat Exchanger to the spray pond.

TECHNICAL REQUIREMENT SURVEILLANCE

----------NOTE----------

Refer to Table 3.11.1.5-1 to determine which TRSs apply for each Monitoring Function.

SURVEILLANCE		FREQUENCY
TRS 3.11.1.5.1	Perform CHANNEL CHECK.	24 hours
TRS 3.11.1.5.2	Perform a Source Check	31 days
TRS 3.11.1.5.3	Perform CHANNEL FUNCTIONAL TEST	92 days
TRS 3.11.1.5.4	Perform CHANNEL CALIBRATION	24 months

TABLE 3.11.1.5-1
RADIOACTIVE LIQUID PROCESS MONITORING INSTRUMENTATION

FUNCTION	REQUIRED CHANNELS	APPLICABILITY	SURVEILLANCE REQUIREMENTS
GROSS RADIOACTIVITY MONITORS NOT PROVIDING AUTOMATIC TERMINATION OF RELEASE			
1. Service Water System Effluent Line	1	(a)	TRS 3.11.1.5.1 TRS 3.11.1.5.2 TRS 3.11.1.5.3 TRS 3.11.1.5.4
2. Supplemental Decay Heat Removal Service Water	1	(a)	TRS 3.11.1.5.1 TRS 3.11.1.5.2 TRS 3.11.1.5.3 TRS 3.11.1.5.4
3. RHR Service Water System Effluent Line.	1/Loop	(b)	TRS 3.11.1.5.1 TRS 3.11.1.5.2 TRS 3.11.1.5.3 TRS 3.11.1.5.4

(a) System aligned through Fuel Pool Cooling Heat Exchanger. Alignment change between Service Water System Effluent Line and Supplemental Decay Heat Removal Service Water is not considered to be a change in the applicable condition.
(b) At all times

3.11 Radioactive Effluents

3.11.2 Gaseous Effluents

3.11.2.1 Dose Rate

TRO 3.11.2.1 The dose rate due to radioactive materials released in gaseous effluents to areas at and beyond the SITE BOUNDARY (See FSAR Section 2.1.1.3) shall be limited to the following:

I. For Noble Gases:

A. Less than or equal to 500 mrems/yr to the total body, and

B. Less than or equal to 3000 mrems/yr to the skin

AND

II. For iodine-131, iodine-133, tritium, and all radionuclides in particulate form with half lives greater than 8 days

A. Less than or equal to 1500 mrem/yr to any organ (Inhalation pathways only.)

APPLICABILITY: At all times.

ACTIONS

CONDITION	REQUIRED ACTION	COMPLETION TIME
A. Dose rate(s) exceed the above limits	A.1 Restore the release rate to within the above limits	Immediately

TECHNICAL REQUIREMENT SURVEILLANCE

SURVEILLANCE		FREQUENCY
TRS 3.11.2.1.1	Determine the dose rate due to noble gases in gaseous effluents.	See ODCM
TRS 3.11.2.1.2	The dose rate due to iodine-131, iodine-133, tritium, and all radionuclides in particulate form with half-lives greater than 8 days in gaseous effluents shall be determined to be within the limits in accordance with the methodology and parameters of the ODCM by obtaining representative samples and performing analyses in accordance with the sampling and analysis program specified in Table 3.11.2.1-1	See Table 3.11.2.1-1

TABLE 3.11.2.1-1
RADIOACTIVE GASEOUS EFFLUENT SAMPLING AND ANALYSIS

Gaseous Release Type	Sampling Method and Frequency	Minimum Analysis Frequency	Type of Activity Analysis	Lower Limit of Detection (LLD) (µCi/ml)
A. Containment Purge	Prior to each purge Grab Sample	Prior to each purge	Principal Noble Gas Gamma Emitters	1E-4
			H-3	1E-6
B. Reactor Building Vents, Turbine Building Vents, and SGTS	31 days [a] Grab Sample	31 days [a]	Principal Noble Gas Gamma Emitters	1E-4
			H-3	1E-6
	Continuous [b] Iodine Cartridge Sample	7 days [c]	I-131	1E-12
			I-133	1E-10
	Continuous [b] Particulate sample	7 days [c]	Principal Particulate Gamma Emitters I-131	1E-11
	Continuous [b] Particulate Sample	92 days Composite [d]	Gross Alpha	1E-11
	Continuous [b] Particulate sample	92 days Composite [d]	Sr-89, Sr-90	1E-11

[a] Noble gas analyses shall be performed following shutdown, startup, or a THERMAL POWER change exceeding 15% of the RATED THERMAL POWER within a 1-hour period.

[b] The ratio of the sample flow rate to the sampled stream flow rate shall be known for the time period covered by each dose or dose rate calculation made in accordance with TROs 3.11.2.1, 3.11.2.2, and 3.11.2.3.

[c] Samples shall be changed at least once per 7 days and analyses shall be completed within 48 hours after changing, or after removal from sampler. Sampling shall also be performed at least once per 24 hours for at least 7 days following each shutdown, startup, or THERMAL POWER change exceeding 15% of RATED THERMAL POWER in 1 hour, and analyses completed within 48 hours of changing. When samples collected for ≤ 24 hours are analyzed, the corresponding LLDs may be increased by a factor of 10.

[d] Minimum frequency for initiation of required analysis.

3.11 Radioactive Effluents

3.11.2 Gaseous Effluents

3.11.2.2 Dose - Noble Gases

TRO 3.11.2.2 The air dose due to noble gases released in gaseous effluents, from each reactor unit, to areas at and beyond the SITE BOUNDARY (See FSAR Section 2.1.1.3) shall be limited to the following:

a. During any calendar quarter: Less than or equal to 5 mrads for gamma radiation and less than or equal to 10 mrads for beta radiation, and

b. During any calendar year: Less than or equal to 10 mrads for gamma radiation and less than or equal to 20 mrads for beta radiation.

APPLICABILITY: At all times.

ACTIONS

CONDITION	REQUIRED ACTION	COMPLETION TIME
A. The calculated air dose exceeds the limits.	A.1 Prepare and submit a Special Report to the Commission	30 days

TECHNICAL REQUIREMENT SURVEILLANCE

SURVEILLANCE	FREQUENCY
TRS 3.11.2.2.1 Determine the cumulative dose contributions for the current calendar quarter and current calendar year for these sources in accordance with the methodology and parameters in the ODCM	31 days

3.11 Radioactive Effluents

3.11.2 Gaseous Effluents

3.11.2.3 Dose - Iodine, Tritium, and Radionuclides in Particulate Form

TRO 3.11.2.3 The dose to a MEMBER OF THE PUBLIC from iodine-131, iodine-133, tritium, and all radionuclides in particulate form with half-lives greater than 8 days in gaseous effluents released, from each reactor unit, to areas at and beyond the SITE BOUNDARY shall be limited to the following:

a. During any calendar quarter: Less than or equal to 7.5 mrems to any organ and,

b. During any calendar year: Less than or equal to 15 mrems to any organ.

APPLICABILITY: At all times.

ACTIONS

CONDITION	REQUIRED ACTION	COMPLETION TIME
A. The calculated dose from the release exceeds the limits.	A.1 Prepare and submit a Special Report to the Commission.	30 days

TECHNICAL REQUIREMENT SURVEILLANCE

SURVEILLANCE	FREQUENCY
TRS 3.11.2.3.1 Determine the cumulative dose contributions for the current calendar quarter and current calendar year for these sources in accordance with the methodology and parameters in the ODCM.	31 days

3.11 Radioactive Effluents

3.11.2 Gaseous Effluents

3.11.2.4 GASEOUS RADWASTE TREATMENT SYSTEM

TRO 3.11.2.4 The GASEOUS RADWASTE TREATMENT SYSTEM shall be OPERABLE and in operation.

APPLICABILITY: When the main condenser air ejector (evacuation) system is in operation.

ACTIONS

CONDITION	REQUIRED ACTION	COMPLETION TIME
A. GASEOUS RADWASTE TREATMENT SYSTEM inoperable.	A.1 Restore GASEOUS RADWASTE TREATMENT SYSTEM to OPERABLE status.	7 days
B. Required Action and associated Completion Time not met.	B.1 Prepare and submit a Special Report to the Commission.	30 days

TECHNICAL REQUIREMENT SURVEILLANCE

SURVEILLANCE		FREQUENCY
TRS 3.11.2.4.1	Verify GASEOUS RADWASTE TREATMENT SYSTEM to be in operation.	92 days

3.11 Radioactive Effluents

3.11.2 Gaseous Effluents

3.11.2.5 VENTILATION EXHAUST TREATMENT SYSTEM

TRO 3.11.2.5 The appropriate portions of the VENTILATION EXHAUST TREATMENT SYSTEM, as described in the Offsite Dose Calculation Manual (ODCM), shall be OPERABLE.

---NOTE---

Appropriate portions of the VENTILATION EXHAUST TREATMENT SYSTEM shall be used to reduce radioactive materials in gaseous waste prior to their discharge when projected doses due to gaseous effluent releases from either reactor unit to areas at and beyond the SITE BOUNDARY would exceed 0.3 mrem to any organ in a 31 day period.

APPLICABILITY: At all times.

ACTIONS

CONDITION	REQUIRED ACTION	COMPLETION TIME
A. VENTILATION EXHAUST TREATMENT SYSTEM inoperable.	A.1 Restore VENTILATION EXHAUST TREATMENT SYSTEM to OPERABLE status.	31 days
B. Required Action and Associated Completion Time of Condition A not met. OR Gaseous waste being discharged without treatment and in excess of TRO limits.	B.1 Prepare and submit a Special Report to the Commission.	30 days

TECHNICAL REQUIREMENT SURVEILLANCE

SURVEILLANCE		FREQUENCY
TRS 3.11.2.5.1	Perform dose projection due to gaseous releases from each reactor unit to areas at and beyond the SITE BOUNDARY in accordance with the methodology and parameters in the ODCM.	31 days
TRS 3.11.2.5.2	----------NOTE---------- Not required if the appropriate system has been utilized to process radioactive gaseous effluents during the previous 92 days. ---------- Verify VENTILATION EXHAUST TREATMENT SYSTEM is OPERABLE by operating the system ≥10 minutes.	92 days

3.11 Radioactive Effluents

3.11.2 Gaseous Effluents

3.11.2.6 Radioactive Gaseous Effluent Monitoring Instrumentation

TRO 3.11.2.6 The radioactive gaseous effluent monitoring instrumentation channels shown in Table 3.11.2.6-1 shall be OPERABLE with their setpoints established in accordance with the ODCM to ensure that the limits of Requirement 3.11.2.1 are not exceeded.

APPLICABILITY: According to Table 3.11.2.6-1

ACTIONS

NOTE
Separate condition entry is allowed for each channel.

CONDITION	REQUIRED ACTION	COMPLETION TIME
A. Radioactive gaseous effluent monitoring instrumentation channel alarm/trip setpoint less conservative than required to ensure that the limits of Requirement 3.11.2.1 are not exceeded	A.1 Suspend the release of radioactive gaseous effluents monitored by the affected channel	Immediately
	OR	
	A.2 Declare the channel inoperable	Immediately

(continued)

ACTIONS (continued)

CONDITION	REQUIRED ACTION	COMPLETION TIME
B. Reactor Building Ventilation System Noble Gas Activity Monitor low range channel inoperable	B.1 Take grab samples AND B.2 Analyze grab samples for isotopic activity to the required LLDs for principal noble gas gamma emitters (Table 3.11.2.1-1) AND B.3 Restore monitoring instrumentation	Once per 8 hours while release is in progress. Within 24 hours of grab sample 30 days
C. Deleted		
D. Reactor Building Ventilation Monitoring System Effluent System Flow Rate Monitor or Sampler Flow Rate Monitor inoperable	D.1 Estimate flow rate AND D.2 Restore monitoring instrumentation	Once per 4 hours while release is in progress 30 days

(continued)

ACTIONS (continued)

CONDITION	REQUIRED ACTION	COMPLETION TIME
E. Turbine Building Ventilation System Noble Gas Activity Monitor low range channel inoperable	E.1 Verify mechanical vacuum pump is not in operation	Immediately
	AND	
	E.2 Take grab samples	Once per 8 hours while release is in progress
	AND	
	E.3 Analyze grab samples for isotopic activity to the required LLDs for the principal noble gas gamma emitters (Table 3.11.2.1-1)	Within 24 hours after sample
	AND	
	E.4 Restore monitoring instrumentation	30 days
F. Deleted		
G. Turbine Building Ventilation Monitoring System Effluent System Flow Rate Monitor or Sampler Flow Rate Monitor inoperable	G.1 Estimate flow rate	Once per 4 hours while release is in progress.
	AND	
	G.2 Restore monitoring instrumentation	30 days

(continued)

ACTIONS (continued)

CONDITION	REQUIRED ACTION	COMPLETION TIME
H. Standby Gas Treatment System Noble Gas Activity Monitor low range channel inoperable	H.1 Take grab samples AND H.2 Analyze grab samples for isotopic activity to the required LLDs for principal noble gas gamma emitters (Table 3.11.2.1-1) AND H.3 Restore monitoring instrumentation	Once per 4 hours while release is in progress Within 24 hours of grab sample being taken 30 days
I. Deleted		
J. SGTS Ventilation Monitoring System Effluent flow rate monitor or sample flow rate monitor inoperable	J.1 Estimate flow rate AND J.2 Restore monitoring instrumentation	Once per 4 hours while release is in progress. 30 days

(continued)

ACTIONS (continued)

CONDITION	REQUIRED ACTION	COMPLETION TIME
K. Required Actions and Completion Times not met for Conditions B through J	K.1 Explain why this inoperability was not corrected in a timely manner	In the next Annual Radioactive Effluents Release Report per TS Section 5.6

TECHNICAL REQUIREMENT SURVEILLANCE

NOTE

Refer to Table 3.11.2.6-1 to determine which TRSs apply for each Monitoring Function.

SURVEILLANCE		FREQUENCY
TRS 3.11.2.6.1	Perform CHANNEL CHECK	24 hours
TRS 3.11.2.6.2	Deleted	
TRS 3.11.2.6.3	Perform Source Check	31 days
TRS 3.11.2.6.4	Perform CHANNEL FUNCTIONAL TEST	92 days
TRS 3.11.2.6.5	Perform CHANNEL CALIBRATION	24 months

TABLE 3.11.2.6-1 (Page 1 of 3)
RADIOACTIVE GASEOUS EFFLUENT MONITORING INSTRUMENTATION

FUNCTION	APPLICABILITY	REQUIRED CHANNELS	SURVEILLANCE REQUIREMENTS
1. REACTOR BUILDING VENTILATION MONITORING SYSTEM			
a. Noble Gas Activity Monitor (Low Range)	At all Times	1	TRS 3.11.2.6.1 TRS 3.11.2.6.3 TRS 3.11.2.6.4 TRS 3.11.2.6.5
b. Deleted			
c. Deleted			
d. Effluent System Flow Rate Monitor	At all Times	1	TRS 3.11.2.6.1 TRS 3.11.2.6.4 TRS 3.11.2.6.5
e. Sampler Flow Rate Monitor	At all Times	1	TRS 3.11.2.6.1 TRS 3.11.2.6.4 TRS 3.11.2.6.5

(continued)

TABLE 3.11.2.6-1 (Page 2 of 3)
RADIOACTIVE GASEOUS EFFLUENT MONITORING INSTRUMENTATION

FUNCTION	APPLICABILITY	REQUIRED CHANNELS	SURVEILLANCE REQUIREMENTS
2. TURBINE BUILDING VENTILATION MONITORING SYSTEM			
a. Noble Gas Activity Monitor (Low Range)	At all Times	1	TRS 3.11.2.6.1 TRS 3.11.2.6.3 TRS 3.11.2.6.4 TRS 3.11.2.6.5
b. Deleted			
c. Deleted			
d. Effluent System Flow Rate Monitor	At all Times	1	TRS 3.11.2.6.1 TRS 3.11.2.6.4 TRS 3.11.2.6.5
e. Sampler Flow Rate Monitor	At all Times	1	TRS 3.11.2.6.1 TRS 3.11.2.6.4 TRS 3.11.2.6.5

(continued)

TABLE 3.11.2.6-1 (Page 3 of 3)
RADIOACTIVE GASEOUS EFFLUENT MONITORING INSTRUMENTATION

FUNCTION	APPLICABILITY	REQUIRED CHANNELS	SURVEILLANCE REQUIREMENTS
3. STANDBY GAS TREATMENT SYSTEM (STGS) MONITOR			
a. Noble Gas Activity Monitor (Low Range)	During operation of SGTS	1	TRS 3.11.2.6.1 TRS 3.11.2.6.3 TRS 3.11.2.6.4 TRS 3.11.2.6.5
b. Deleted			
c. Deleted			
d. Effluent System Flow Rate Monitor	During operation of SGTS	1	TRS 3.11.2.6.1 TRS 3.11.2.6.4 TRS 3.11.2.6.5
e. Sampler Flow Rate Monitor	During operation of SGTS	1	TRS 3.11.2.6.1 TRS 3.11.2.6.4 TRS 3.11.2.6.5

3.11 Radioactive Effluents

3.11.3 Total Dose

TRO 3.11.3 The annual (calendar year) dose or dose commitment to any MEMBER OF THE PUBLIC, due to releases of radioactivity and radiation, from uranium fuel cycle sources shall be limited to less than or equal to 25 mrem to the total body or any organ, except the thyroid, which shall be limited to less than or equal to 75 mrem.

APPLICABILITY: At all times

ACTIONS

CONDITION	REQUIRED ACTION	COMPLETION TIME
A. Calculated doses from the release of radioactive materials in liquid or gaseous effluents exceed twice the limits of Requirements 3.11.1.2.a, 3.11.1.2.b, 3.11.2.2.a, 3.11.2.2.b, 3.11.2.3.a, or 3.11.2.3.b	A.1 Initiate actions to calculate whether the TRO limits have been exceeded	Immediately
B. TRO limits exceeded	B.1 Prepare and submit a Special Report to the Commission	30 days

TECHNICAL REQUIREMENT SURVEILLANCE

SURVEILLANCE		FREQUENCY
TRS 3.11.3.1	Determine the cumulative dose from liquid and gaseous effluents in accordance with the methodology and parameters in the ODCM	31 days
TRS 3.11.3.2	Determine cumulative dose contributions from direct radiation from unit operation in accordance with the methodology and parameters in the ODCM	12 months

3.11 Radioactive Effluents

3.11.4 Radiological Environmental Monitoring

3.11.4.1 Monitoring Program

TRO 3.11.4.1 The radiological environmental monitoring program shall be conducted as specified in Table 3.11.4.1-1.

APPLICABILITY: At all times

ACTIONS

CONDITION	REQUIRED ACTION	COMPLETION TIME
A. Radiological environmental monitoring program not being conducted as specified in Table 3.11.4.1-1	A.1 Report and describe the events and any actions taken to prevent their recurrence in the Annual Radiological Environmental Operating Report	Annually SC-004
B. The average level of radioactivity over any calendar quarter as the result of an individual radionuclide in plant effluents in a particular environmental exposure pathway in a particular environmental sampling medium, at a specified location exceeds the applicable reporting level of Table 3.11.4.1-2	B.1 Prepare and submit a Special Report to the Commission	30 days SC-004

(continued)

ACTIONS (continued)

CONDITION	REQUIRED ACTION	COMPLETION TIME
C. More than one of the radionuclides in Table 3.11.4.1-2 are detected in a particular environmental exposure pathway at a specified monitoring location and are the result of plant effluents AND The sum of the ratios of the quarterly average activity levels to their corresponding reporting levels of each detected radionuclide, from Table 3.11.4.1-2, is ≥ 1.0	C.1 Prepare and submit a Special Report to the Commission	30 days

003

(continued)

ACTIONS (continued)

CONDITION	REQUIRED ACTION	COMPLETION TIME
D. One or more Radionuclide(s) other than those in Table 3.11.4.1-2 are detected in a particular environmental exposure pathway at a specified location and are the result of plant effluents AND The potential annual dose to a MEMBER OF THE PUBLIC from all detected radionuclides that are the result of plant effluents is greater than or equal to the calendar year limits of TROs 3.11.1.2, 3.11.2.2 and 3.11.2.3	D.1 Prepare and submit a Special Report to the Commission	30 days
E. The requirements for a Special Report per Conditions B, C, or D are met, but the radionuclides that are detected are not the result of plant effluents	E.1 Report and discuss the reasons for not attributing identified radionuclides to plant effluents in the Annual Radiological Environmental Operating Report	Annually

(continued)

ACTIONS (continued)

CONDITION	REQUIRED ACTION	COMPLETION TIME
F. Milk or fresh leafy vegetable samples are unavailable from one or more of the sample locations required by Table 3.11.4.1-1	----------NOTE---------- The specific locations from which samples were unavailable may then be deleted from the monitoring program. ---------- F.1 Identify locations for obtaining replacement samples and add them to the radiological environmental monitoring program	30 days
	AND F.2 Identify the cause of the unavailability of samples and identify the new location(s) for obtaining replacement samples in the next Annual Radioactive Effluent Release Report	Annually

TECHNICAL REQUIREMENT SURVEILLANCE

SURVEILLANCE		FREQUENCY
TRS 3.11.4.1.1	Collect the radiological environmental monitoring samples pursuant to Table 3.11.4.1-1.	As required by Table 3.11.4.1-1
TRS 3.11.4.1.2	Analyze samples pursuant to the requirements of Table 3.11.4.1-1 with equipment meeting the detection capabilities required by Table 3.11.4.1-3	As required by Table 3.11.4.1-1
TRS 3.11.4.1.3	Determine annual cumulative potential dose contributions from radionuclides detected in environmental samples in accordance with the methodology and parameters in the ODCM.	Annually

TABLE 3.11.4.1-1 (Page 1 of 3)
RADIOLOGICAL ENVIRONMENTAL MONITORING PROGRAM

EXPOSURE PATHWAY AND/OR SAMPLE	NUMBER OF REPRESENTATIVE SAMPLES AND SAMPLE LOCATIONS	SAMPLING AND COLLECTION FREQUENCY	TYPE AND FREQUENCY OF ANALYSIS
1. DIRECT RADIATION	40 routine monitoring stations with two or more dosimeters or with one instrument for measuring and recording dose rate continuously placed as follows: 1. An inner ring of stations, one in each meteorological sector, in the general area of the SITE BOUNDARY	Quarterly	Gamma dose quarterly
	2. An outer ring of stations, one in each meteorological sector, in the 3 to 9 mile range from the site 3. The balance of the stations placed in special interest areas such as population centers, nearby residences, schools, and in 1 or 2 areas to serve as control stations		
AIRBORNE Radioiodine and Particulates	Samples from 5 locations a. 1 sample from close to each of the 3 SITE BOUNDARY locations (in different sectors) with the highest calculated annual average groundlevel χ/Q b. 1 sample from the vicinity of the community having one of the highest calculated annual ground level χ/Q c. 1 sample from a control location, between 15 and 30 km distant and in the least prevalent wind direction of wind blowing from the plant	Continual sampler operation with sample collection weekly, or more frequently if required by dust loading	Radioiodine Cannister: I-131 Analysis weekly Particulate Sampler: Gross Beta radio activity analysis following filter change[a]; Gamma isotopic analysis of composite (by location) quarterly

(continued)

[a] Airborne particulate sample filters shall be analyzed for gross beta radioactivity 24 hours or more after sampling to allow for radon and thoron daughter decay. If gross beta activity in air particulate samples is greater than ten times the yearly mean of control samples, gamma isotopic analysis shall be performed on the individual samples.

TABLE 3.11.4.1-1 (Page 2 of 3)
RADIOLOGICAL ENVIRONMENTAL MONITORING PROGRAM

EXPOSURE PATHWAY AND/OR SAMPLE	NUMBER OF REPRESENTATIVE SAMPLES AND SAMPLE LOCATIONS	SAMPLING AND COLLECTION FREQUENCY	TYPE AND FREQUENCY OF ANALYSIS
3. WATERBORNE			
a. Surface	1 sample upstream 1 sample downstream	Composite sample over one-month period	Gamma isotopic analysis monthly. Composite for tritium analyses quarterly
b. Ground	Samples from 1 or 2 sources only if likely to be affected	Quarterly	Gamma isotopic and tritium analyses quarterly
c. Drinking	1 sample from each of 1 to 3 of the nearest water supplies that could be affected by its discharge 1 sample from a control location	Composite sample over 2-week period when I-131 analysis is performed, monthly composite otherwise	I-131 analysis on each composite when the dose calculated for the consumption of the water is greater than 1 mrem per year. Composite for gross beta and gamma isotopic analyses monthly. Composite for tritium analyses quarterly
d. Sediment from shoreline	1 sample from downstream area with existing or potential recreational value	Semiannually	Gamma isotopic analyses semiannually

(continued)

TABLE 3.11.4.1-1 (Page 3 of 3)
RADIOLOGICAL ENVIRONMENTAL MONITORING PROGRAM

EXPOSURE PATHWAY AND/OR SAMPLE	NUMBER OF REPRESENTATIVE SAMPLES AND SAMPLE LOCATIONS	SAMPLING AND COLLECTION FREQUENCY	TYPE AND FREQUENCY OF ANALYSIS
4. INGESTION			
a. Milk	a. Samples from milking animals in 3 locations within 5km from the plant having the highest dose potential. If there are none, then, 1 sample from milking animals in each of 3 areas between 5 and 8km distant where doses are calculated to be greater than 1 mrem per year.	Semimonthly when animals are on pasture, monthly at other times.	Gamma isotopic and I-131 analysis semimonthly when animals are on pasture; monthly at other times.
	1 sample from milking animals at a control location (between 15 and 30km from the plant preferably in the least prevalent direction for wind blowing from the plant).		
b. Fish and/or Invertebrates	b. 1 sample of each of two recreationally important species in vicinity of plant discharge area.	Sample in season, or semiannually if they are not seasonal.	Gamma isotopic analysis on edible portions.
	1 sample of same species in areas not influenced by plant discharge.		
c. Food Products	c. 1 sample of each principal class of food products from any area which is irrigated by water in which liquid plant wastes have been discharged.	At time of harvest	Gamma isotopic analysis on edible portions.
	Samples of 3 different kinds of broad leaf vegetation grown nearest each of two different offsite locations of highest predicted annual average ground level D/Q if milk sampling is not performed.	Monthly when available	Gamma isotopic and I-131 analysis.
	1 sample of each of the similar broad leaf vegetation grown between 15 to 30km from the plant, preferably, in the least prevalent direction for wind blowing from the plant if milk sampling is not performed.	Monthly when available	Gamma isotopic and I-131 analysis.

TABLE 3.11.4.1-2
REPORTING LEVELS FOR RADIOACTIVITY CONCENTRATIONS IN ENVIRONMENTAL SAMPLES
Reporting Levels

Analysis	Water (pCi/l)	Airborne Particulate or Gases (pCi/m^3)	Fish (pCi/kg, wet)	Milk (pCi/l)	Food Products (pCi/kg, wet)
H-3	20,000[a]				
Mn-54	1,000		30,000		
Fe-59	400		10,000		
Co-58	1,000		30,000		
Co-60	300		10,000		
Zn-65	300		20,000		
Zr-Nb-95	400[b]				
I-131	2	0.9		3	100
Cs-134	30	10	1,000	60	1,000
Cs-137	50	20	2,000	70	2,000
Ba-La-140	200[b]			300	

[a] For drinking water samples. This is 40 CFR Part 141 value. If no drinking water pathway exists, a value of 30,000 pCi/l may be used.
[b] Total for parent and daughter.

TABLE 3.11.4.1-3
DETECTION CAPABILITIES FOR ENVIRONMENTAL SAMPLE ANALYSIS
LOWER LIMIT OF DETECTION (LLD)

Analysis	Water (pCi/l)	Airborne Particulate Or Gas (pCi/m^3)	Fish (pCi/kg, wet)	Milk (pCi/l)	Food Products (pCi/kg, wet)	Sediments (pCi/kg, dry)
Gross Beta	4	0.01				
H-3	2000					
Mn-54	15		130			
Fe-59	30		260			
Co-58, 60	15		130			
Zn-65	30		260			
Zr-95	30					
Nb-95	15					
I-131	1[a]	0.07		1	60	
Cs-134	15	0.05	130	15	60	150
Cs-137	18	0.06	150	18	80	180
Ba-140	60			60		
La-140	15			15		

[a] LLD for drinking water samples.

3.11 Radioactive Effluents

3.11.4 Radiological Environmental Monitoring

3.11.4.2 Land Use Census

TRO 3.11.4.2 A land use census shall be conducted.

APPLICABILITY: At all times.

ACTIONS

CONDITION	REQUIRED ACTION	COMPLETION TIME
A. Land use census identifies a location(s) which yields a calculated dose or dose commitment greater than the values currently being calculated in Requirement 3.11.2.3	A.1 Identify the new location(s) in the next Annual Radioactive Effluent and Waste Disposal Report	As defined by the Annual Radioactive Effluent and Waste Disposal Report
B. Land use census identifies a location(s) that yields a calculated dose or dose commitment (via the same exposure pathway) 20 percent greater than at a location from which samples are currently being obtained in accordance with Requirement 3.11.4.1	B.1 Add the new location(s) to the radiological environmental monitoring program AND B.2 Identify the new location(s) in the next Annual Radioactive Effluent Release Report per TS Section 5.6	30 days As defined in Annual Radioactive Effluent Release Report

TECHNICAL REQUIREMENT SURVEILLANCE

SURVEILLANCE	FREQUENCY
TRS 3.11.4.2.1 Conduct the land use census	12 months

004

3.11 Radioactive Effluents

3.11.4 Radiological Environmental Monitoring

3.11.4.3 Interlaboratory Comparison Program

TRO 3.11.4.3 Analyses shall be performed on radioactive materials supplied as part of an Interlaboratory Comparison Program.

APPLICABILITY: At all times.

ACTIONS

CONDITION	REQUIRED ACTION	COMPLETION TIME
A. Analyses not being performed	A.1 Report the corrective actions taken to prevent a recurrence to the Commission	As required

TECHNICAL REQUIREMENT SURVEILLANCE

SURVEILLANCE	FREQUENCY
TRS 3.11.4.3.1 Include a summary of the results obtained as part of the above required Interlaboratory Comparison Program in the Annual Radiological Environmental Operating Report	Annually

B 3.11.1.1 Liquid Effluents Concentration

BASES

TRO

This requirement is provided to ensure that the concentration of radioactive materials released in liquid waste effluents to UNRESTRICTED AREAS will be less than 10 times the concentration levels specified in 10 CFR Part 20.1001 to 20.2402, Appendix B, Table 2, Column 2. The requirement provides operational flexibility for releasing liquid effluents in concentrations to follow the Section II.A and II.C design objectives of Appendix I to 10 CFR part 50. This limitation provides reasonable assurance that the levels of radioactive materials in bodies of water in UNRESTRICTED AREAS will result in exposures within (1) the Section II.A design objectives of Appendix I, 10 CFR 50, to a Member of the Public and (2) restrictions authorized by 10 CFR 20.1301(e). The concentration limit for dissolved or entrained noble gases is based upon the assumptions that Xe-135 is the controlling radionuclide and its effluent concentration in air (submersion) was converted to an equivalent concentration in water. This requirement does not affect the requirement to comply with the annual limitations of 10 CFR 20.1301(a). This requirement applies to the release of radioactive materials in liquid effluents from all units at the site. The required detection capabilities for radioactive materials in liquid waste samples are tabulated in terms of the lower limits of detection (LLDs). Detailed discussion of the LLD and the other detection limits can be found in Curie, L.A., "Lower Limit of Detection: Definition and Elaboration of a Proposed Position for Radiological Effluent and Environmental Measurements." (References 2, 3, and 4)

This section of the TRM is also part of the ODCM (Reference 2).

Actions

The Actions are defined to ensure proper corrective measures are taken in response to exceeding the TRO limits.

TRS

The TRSs are defined to be performed at the specified Frequency to ensure that the parameters are maintained within the TRO limits. Table 3.11.1.1-1 defines Radioactive Liquid Waste Sampling and Analysis Program. The lower limit of detection (LLD) is defined, for purposes of these Requirements, as the smallest concentration of radioactive material in a sample that will yield a net count,

(continued)

B 3.11.1.1 Liquid Effluents Concentration

BASES

TRS (continued) above system background, that will be detected with 95% probability with only 5% probability of falsely concluding that a blank observation represents a "real" signal. For a particular measurement system, which may include radiochemical separation:

$$LLD = \frac{4.66 s_b}{E \bullet V \bullet 2.22E6 \bullet Y \bullet \exp(-\lambda \Delta t)}$$

Where:

LLD is the *a priori* lower limit of detection as defined above (as microcuries per unit mass or volume).

s_b is the standard deviation of the background counting rate or of the counting rate of a blank sample as appropriate (as counts per minute),
E is the counting efficiency, as counts per disintegration,
V is the sample size, in units of mass or volume,
2.22 E6 is the number of disintegrations per minute per microcurie,
Y is the fractional radiochemical yield, when applicable.
λ is the radioactive decay constant for the particular radionuclide, and
Δt for plant effluents is the elapsed time between the midpoint of sample collection and time of counting.

Typical values of E, V, Y, and Δt should be used in the calculation.

It should be recognized that the LLD is defined as an *a priori* (before the fact) limit representing the capability of a measurement system and not as an *a posteriori* (after the fact) limit for a particular measurement.

A batch release is the discharge of liquid wastes of a discrete volume. Prior to sampling for analyses, each batch shall be isolated, and then thoroughly mixed to assure representative sampling.

(continued)

B 3.11.1.1 Liquid Effluents Concentration

BASES

TRS (continued)

The principal gamma emitters for which the LLD specification applies include the following radionuclides: Mn-54, Fe-59, Co-58, Co-60, Zn-65, Mo-99, Cs-134, Cs-137, Ce-141 and Ce-144. The dissolved and entrained gases (gamma emitters) for which the LLD specification applies include the following radionuclides: Kr-85, Kr-85m, Kr-87, Kr-88, Ar-41, Xe-133, Xe-133m, Xe-135, and Xe-135m. This list does not mean that only these nuclides are to be considered. Other gamma peaks that are identifiable, together with those of the above nuclides, shall also be analyzed and reported in accordance with the ODCM.

A composite sample is one in which the quantity of liquid sampled is proportional to the quantity of liquid waste discharged and in which the method of sampling employed results in a specimen that is representative of the liquids released over a period no longer than the Minimum Analysis Frequency.

The Minimum Analysis Frequency as listed for the Composite Samples shall mean the minimum frequency for initiation of the required analyses, not completion of the analyses and evaluation of the results. Since the analysis involves sending the samples to an offsite laboratory and performance of involved sample preparation and wet chemical analyses, there will be a delay between initiation of the analysis and receipt of the results.

The analysis initiation shall normally be done on a calendar month for the 31 day frequency or calendar quarter for a 92 day frequency.

REFERENCES

1. Technical Specification 5.5.4 - Radioactive Effluent Controls program.
2. Technical Specification 5.5.1 - Offsite Dose Calculation Manual.
3. NUREG/CR-4007, September, 1984.
4. 10 CFR Part 20.

B 3.11.1.2 Liquid Effluents Dose

BASES

TRO

This requirement is provided to implement the requirements of Sections II.A, III.A and IV.A of Appendix I, 10 CFR Part 50. The Technical Requirement for Operation implements the guides set forth in Section II.A of Appendix I. Also, for fresh water sites with drinking water supplies which can be potentially affected by plant operations, there is reasonable assurance that the operation of the facility will not result in radionuclide concentrations in the finished drinking water that are in excess of the requirements of 40 CFR 141. The dose calculation methodology and parameters in the ODCM implement the requirements in Section III.A of Appendix I that conformance with the guides of Appendix I be shown by calculational procedures based on models and data, such that the actual exposure of a MEMBER OF THE PUBLIC through appropriate pathways is unlikely to be substantially underestimated. The equations specified in the ODCM for calculating the doses due to the actual release rates of radioactive materials in liquid effluents are consistent with the methodology provided in Regulatory Guide 1.109, "Calculation of Annual Doses to Man from Routine Releases of Reactor Effluents for the Purpose of Evaluating Compliance with 10 CFR Part 50, Appendix I," Revision 1, October 1977 and Regulatory Guide 1.113, "Estimating Aquatic Dispersion of Effluents from Accidental and Routine Reactor Releases for the Purpose of Implementing Appendix I," April 1977. (References 2, 3, 4, and 5)

This section of the TRM is also part of the ODCM (Reference 2).

Actions

The ACTION statements provide the required operating flexibility and at the same time implement the guides set forth in Section IV.A of Appendix I to assure that the releases of radioactive material in liquid effluents will be kept "as low as is reasonably achievable."

The Special Report to the Commission under Action A.1 shall

(continued)

B 3.11.1.2 Liquid Effluents Dose

BASES

ACTIONS (continued)	identify the cause(s) for exceeding the limit(s) and define the corrective actions that have been taken to reduce the releases and the proposed corrective actions to be taken to assure that subsequent releases will be in compliance with the specified limits. This Special Report shall also include the radiological impact on finished drinking water supplies at the nearest downstream drinking water source.
TRS	The TRSs are defined to be performed at the specified Frequency to ensure that the TRO limits are maintained.
REFERENCES	1. Tech Spec 5.5.4 - Radioactive Effluent Controls program 2. Tech Spec 5.5.1 - Offsite Dose Calculation Manual 3. 10 CFR Part 20 4. Regulatory Guide 1.109, "Calculation of Annual Doses to Man from Routine Releases of Reactor Effluents for the Purpose of Evaluating Compliance with 10 CFR Part 50, Appendix I," Revision 1, October 1977. 5. Regulatory Guide 1.113, "Estimating Aquatic Dispersion of Effluents from Accidental and Routine Reactor Releases for the Purpose of Implementing Appendix I," April 1977.

B 3.11.1.3 Liquid Waste Treatment System

BASES

TRO

The OPERABILITY of the liquid radwaste treatment system ensures that this system will be available for use whenever liquid effluents require treatment prior to release to the environment. The requirement that the appropriate portions of this system be used when specified provides assurance that the releases of radioactive materials in liquid effluents will be kept "as low as is reasonably achievable". This Requirement implements the requirements of 10 CFR Part 50.36a, General Design Criterion 60 of Appendix A to 10 CFR Part 50 and the design objective given in Section II.D of Appendix I to 10 CFR Part 50. The specified limits governing the use of appropriate portions of the liquid radwaste treatment system were specified as a suitable fraction of the dose design objectives set forth in Section II.A of Appendix I, 10 CFR part 50, for liquid effluents. (Reference 3)

This section of the TRM is also part of the ODCM (Reference 2).

Actions

The Actions are defined to ensure proper corrective measures are taken in response to the inoperable components.

The Special Report to the Commission under Action A.1 shall include the following:

1. Explanation of why liquid radwaste was being discharged without treatment, identification of any inoperable equipment or subsystems and the reason for the inoperability,
2. Action(s) taken to restore the inoperable equipment to OPERABLE status, and
3. Summary description of action(s) taken to prevent a recurrence.

TRS

The TRSs are defined to be performed at the specified Frequency to ensure that the system is maintained OPERABLE. OPERABILITY is demonstrated by operating the liquid radwaste treatment system equipment for at least 10 minutes.

REFERENCES

1. Technical Specification 5.5.4 - Radioactive Effluent Controls program.
2. Technical Specification 5.5.1 - ODCM.
3. 10 CFR Part 50.

B 3.11.1.4 Liquid Radwaste Effluent Monitoring Instrumentation

BASES

TRO The radioactive liquid effluent instrumentation are provided to monitor and control, as applicable, the releases of radioactive materials in liquid effluents during actual or potential releases of liquid effluents. The alarm/trip setpoints for these instruments shall be calculated in accordance with the procedures in the ODCM (Reference 2) to ensure that the alarm/trip will occur prior to exceeding the 10 times the concentration values specified in Appendix B, Table 2, Column 2 of 10CFR20.1001 - 10CFR20.2401 (Ref. 2). The OPERABILITY and use of this instrumentation is consistent with the requirements of General Design Criteria 60, 63, and 64 of Appendix A to 10 CFR Part 50. (Reference 4)

OPERABILITY of the radiation monitoring instrumentation requires their alarm/trip setpoints set to ensure that the limits of Requirement 3.11.1.1 are not exceeded. The alarm/trip setpoints of these channels shall be determined in accordance with the methodology and parameters described in the ODCM.

OPERABILITY of the Liquid Radwaste Effluent Line gross radioactivity monitor includes the proper functioning of the discharge valve interlocks (sample pump low flow, high radiation alarm, and radiation monitor failure).

OPERABILITY of the Cooling Tower Blowdown flow rate measurement device includes the proper functioning of the Liquid Radwaste Effluent Line discharge valve interlock (i.e. cooling tower blowdown low flow).

The Required Channels for each function in Table 3.11.1.4-1 are as follows:

(continued)

B 3.11.1.4 Liquid Radwaste Effluent Monitoring Instrumentation

BASES

TRO (continued)

a. Liquid Radwaste Effluent rad monitor (Function 1.a) one instrument per station.
b. Liquid Radwaste Effluent flow rate (Function 2.a) one instrument per station.
c. Cooling Tower Blowdown flow rate (Function 2.b) one instrument per station.

It should be noted that the radioactive liquid waste stream is diluted in the Cooling Tower blowdown line prior to entering the Susquehanna River. The setpoint for this dilution water flow is 5000 gpm from the combination of the Unit 1 blowdown, Unit 2 blowdown flow, and Spray Pond Discharge.

Options exist to ensure the requirement of one OPERABLE Cooling Tower Blowdown flow Instrument per station is met as required by Table 3.11.1.4-1, Function 2.b. As long as any one of three instruments (Unit 1 Tower, Unit 2 Tower, Total Site Blowdown) are OPERABLE and alignment of HS-06443A and HSS-01503 on panel 0C301 is such that the OPERABLE instrument(s) are in the circuit, then the TRM Requirement is met.

This section of the TRM is also part of the ODCM (Reference 2).

Actions

The Actions are defined to ensure proper corrective measures are taken in response to the inoperable components.

Pump curves generated in situ may be used to estimate flow for Action D.1.

TRS

The TRSs are defined to be performed at the specified Frequency to ensure that the monitoring instrumentation is maintained OPERABLE.

The TRSs shall be performed in accordance with the Technical Specification definition for the test with the following additional requirements:

The Liquid Radwaste Effluent Line radiation monitor CHANNEL FUNCTIONAL TEST shall also demonstrate that automatic isolation of this pathway and control room alarm annunciation occur if any

(continued)

B 3.11.1.4 Liquid Radwaste Effluent Monitoring Instrumentation

BASES

TRS (continued)

of the following conditions exist:

1. Instrument indicates measured levels above the alarm/trip setpoint.
2. Circuit failure.
3. Instrument indicates a downscale failure.

The liquid Radwaste Effluent Line radiation monitor initial CHANNEL CALIBRATION shall be performed using one or more of the reference standards certified by the National Institute of Standards and Technology (NIST) or using standards that have been obtained from suppliers that participate in measurement assurance activities with NIST. These standards shall permit calibrating the system over its intended range of energy and measurement range. For subsequent CHANNEL CALIBRATION, sources that have been related to the initial calibration may be used in lieu of the reference standards associated with the initial calibration.

The Liquid Radwaste Effluent Line flow rate monitor and Cooling Tower Blowdown flow rate monitor CHANNEL CHECK shall consist of verifying indication of flow during periods of release. CHANNEL CHECK shall be made at least once per 24 hours on days on which continuous, periodic, or batch releases are made.

REFERENCES

1. Technical Specification 5.5.4 - Radioactive Effluent Controls program
2. Technical Specification 5.5.1 - Offsite Dose Calculation Manual
3. 10 CFR Part 20
4. 10 CFR Part 50

B 3.11.1.5 Radioactive Liquid Process Monitoring Instrumentation

BASES

TRO

The radioactive liquid process instrumentation is provided to monitor and control, as applicable, the releases of radioactive materials in liquid effluents during actual or potential releases of liquid effluents. The alarm/trip setpoints for these instruments shall be calculated in accordance with the procedures in the ODCM (Reference 2) to ensure that the alarm/trip will occur prior to exceeding 10 times the concentration values specified in Appendix B, Table 2, Column 2 of 10CFR20.1001 - 20.2401 (Reference 3). The OPERABILITY and use of this instrumentation is consistent with the requirements of General Design Criteria 60, 63, and 64 of Appendix A to 10 CFR Part 50. (Reference 4)

This section of the TRM is also part of the ODCM (Reference 2).

Actions

The Actions are defined to ensure proper corrective measures are taken in response to the inoperable components.

If an RHR heat exchanger and its applicable RHRSW loop are in service there is a pathway from the heat exchanger to the spray pond. If the heat exchanger and RHRSW loop are not in service (i.e., valved-out, RHRSW pump not running, or piping drained) then a pathway does not exist.

If there is no pathway, the requirement to perform grab sampling is not applicable when the RHR Service Water System Effluent Line Radiation Monitor has been declared inoperable.

The function of pumping down the RHR heat exchanger and RHRSW system piping to the Spray Pond provides a pathway for a release of potentially radioactively contaminated water. The RHRSW system is considered an 80-10 system because a pathway to the environment from this system exists through the Spray Pond and because the system, although normally not radioactively contaminated, has the potential for becoming radioactively contaminated in the event that a leak develops across an RHR heat exchanger. Therefore, grab samples must be collected periodically when the RHRSW system radiation monitor for a particular loop is inoperable (malfunctioning) and water from that loop of the system is being returned to the Spray Pond. Also, grab samples must be collected prior to operations in which water from the RHRSW system will be drained to the Spray Pond.

(continued)

BASES (continued)

TRS

The TRSs are defined to be performed at the specified Frequency to ensure that the monitoring instrumentation is maintained OPERABLE.

Performance of the CHANNEL CHECK ensures that a gross failure of the instrument has not occurred. A CHANNEL CHECK is normally a comparison of the parameter indicated on one channel against a similar parameter on other channels. It is based on the assumption that instrument channels monitoring the same parameter should read approximately the same value. Significant deviations between instrument channels could an indication of excessive instrument drift in one of the channels or something even more serious. A CHANNEL CHECK will detect gross channel failure; thus, it is key to verifying the instrument continues to operate properly between each CHANNEL CALIBRATION.

Agreement criteria, which are developed by the plant staff based on an investigation of a combination of the channel instrument uncertainties, may be used to support this parameter comparison and include indication and readability. If a channel is outside the criteria, it may be an indication that the instrument has drifted outside its limit and does not necessarily indicate the channel is inoperable.

The TRSs shall be performed in accordance with the Technical Specification definition for the test with the following additional requirements:

The CHANNEL FUNCTIONAL TEST shall also demonstrate that control room alarm annunciation occurs if any of the following conditions exists:

1. Instrument indicates measured levels above the alarm setpoint.
2. Circuit failure.
3. Instrument indicates a downscale failure, and
4. Instrument controls not set in operate mode.

(continued)

BASES (continued)

TRS (continued)	The initial CHANNEL CALIBRATION shall be performed using one or more of the reference standards certified by the National Institute of Standards and Technology (NIST) or using standards that have been obtained from suppliers that participate in measurement assurance activities with NIST. These standards shall permit calibrating the system over its intended range of energy and measurement range. For subsequent CHANNEL CALIBRATION, sources that have been related to the initial calibration may be used in lieu of the reference standards associated with the initial calibration.
REFERENCES	1. Technical Specification 5.5.4 - Radioactive Effluent Controls program 2. Technical Specification 5.5.1 - Offsite Dose Calculation Manual 3. 10 CFR Part 20 4. 10 CFR Part 50

B 3.11.2.1 Dose Rate

BASES

TRO

This requirement provides reasonable assurance that radioactive material discharged in gaseous effluents will not result in the exposure of a Member of the Public either within or outside the Site Boundary, in excess of the design objectives of Appendix I to 10CFR50. It provides operational flexibility for releasing gaseous effluents while satisfying section II.B and II.C design objectives of Appendix I. For individuals who may at times be within the Site Boundary, the occupancy of the individual will usually be sufficiently low to compensate for any increase in atmospheric diffusion factor above that for the Site Boundary. The specified release rate limits restrict, at all times, the corresponding dose rates above background to a Member of the Public at or beyond the Site Boundary to less than or equal to 500 mrem/yr to the total body or to less than or equal to 3000 mrem/yr to the skin. These release rate limits also restrict, at all times, the corresponding thyroid dose rate above background to an individual via the inhalation pathway to less than or equal to 1500 mrem/yr. These limits provide reasonable assurance that radioactive material discharged in gaseous effluents will not result in the exposure of a MEMBER OF THE PUBLIC either within or outside the SITE BOUNDARY, to annual average concentrations exceeding the limits specified in Appendix B, Table II of 10 CFR Part 20. (Reference 3)

This Requirement applies to the release of gaseous effluents from all reactors at the site.

This section of the TRM is also part of the ODCM (Reference 2).

(continued)

B 3.11.2.1 Dose Rate

BASES

Actions

The Actions are defined to ensure proper corrective measures are taken in response to the limits being exceeded.

TRS

The TRSs are defined to be performed at the specified Frequency to ensure that the dose rates are maintained within limits. Dose rates are determined in accordance with the methodology and parameters of the ODCM.

Table 3.11.2.1-1 defines Radioactive Gaseous Waste Sampling and Analysis Program. The lower limit of detection (LLD) is defined, for purposes of these requirement, as the smallest concentration of radioactive material in a sample that will yield a net count, above system background, that will be detected with 95% probability with only 5% probability of falsely concluding that a blank observation represents a "real" signal. For a particular measurement system, which may include radiochemical separation:

$$LLD = \frac{4.66 s_b}{E \bullet V \bullet 2.22E6 \bullet Y \bullet \exp(-\lambda \Delta t)}$$

Where:

LLD is the *a priori* lower limit of detection as defined above (as microcuries per unit mass or volume),
s_b is the standard deviation of the background counting rate or of the counting rate of a blank sample as appropriate (as counts per minute),
E is the counting efficiency, as counts per disintegration,
V is the sample size, in units of mass or volume,
2.22 E6 is the number of disintegrations per minute per microcurie,
Y is the fractional radiochemical yield, when applicable,
λ is the radioactive decay constant for the particular radionuclide, and
Δt for plant effluents is the elapsed time between the midpoint of sample collection and time of counting (for plant effluents, not environmental samples).

(continued)

B 3.11.2.1 Dose Rate

BASES

TRS (continued) The value of s_b used in the calculation of the LLD for a detection system shall be based on the actual observed variance of the background counting rate or of the counting rate of the blank samples (as appropriate) rather than on an unverified theoretically predicted variance. Typical values of E, V, Y, and Δt shall be used in the calculation.

The principal gamma emitters for which the LLD specification applies include the following radionuclides: Kr-87, Kr-88, Xe-133, Xe-133m, Xe-135, Xe-135m and Xe-138 for gaseous emissions and Mn-54, Fe-59, Co-58, Co-60, Zn-65, Mo-99, Cs-134, Cs-137, Ce-141 and Ce-144 for particulate emissions. This list does not mean that only these nuclides are to be considered. Other gamma peaks which are identifiable, together with those of the above nuclides, shall also be analyzed and reported in the Annual Radioactive Effluent Release Report.

The design of the systems for the sampling of particulates and iodines provide for sample nozzle entry velocities which are approximately isokinetic with instack air velocities. Gaseous particulate and iodine samples are gathered continuously, with the sample size proportional to the stack emissions; a composite gaseous sample is a combination of all the particulate filters gathered in a sampling period.

Particulate or iodine sampling required to be in continuous service will be considered to remain and have been in continuous service when its service is interrupted for a time period not to exceed 1 hour per sampling period. For particulate and iodine sampling, this is a small fraction of the normal minimum analysis frequency.

The minimum Analysis Frequency as listed for the Composite Samples shall mean the minimum frequency for initiation of the required analyses, not completion of the analysis and evaluation of the results. Since the analysis involves sending the samples to an offsite laboratory and performance of involved sample preparation and wet chemical analyses, there will be a delay between initiation of the analysis and receipt of the results. The analysis initiation shall normally be done on a calendar quarter for a 92 day frequency.

(continued)

B 3.11.2.1 Dose Rate

BASES

REFERENCES

1. Technical Specification 5.5.4 - Radioactive Effluent Controls Program
2. Technical Specification 5.5.1 - Offsite Dose Calculation Manual
3. 10CFR Part 20

B 3.11.2.1 Dose Rate

BASES

REFERENCES

1. Technical Specification 5.5.4 - Radioactive Effluent Controls Program
2. Technical Specification 5.5.1 - Offsite Dose Calculation Manual
3. 10CFR Part 20

B 3.11.2.2 Dose - Noble Gases

BASES

TRO	This requirement is provided to implement the requirements of Sections II.B, III.A and IV.A of Appendix I, 10 CFR Part 50. (Reference 5) The Technical Requirement for Operation implements the guides set forth in Section II.B of Appendix I. This section of the TRM is also part of the ODCM (Reference 2).
Actions	The ACTION statements provide the required operating flexibility and at the same time implement the guides set forth in Section IV.A of Appendix I to assure that the releases of radioactive material in gaseous effluents will be kept "as low as is reasonably achievable". The Special Report required under Action A.1 shall identify the cause(s) for exceeding the limit(s) and define the corrective actions that have been taken to reduce the releases and the proposed corrective actions to be taken to assure that subsequent releases will be in compliance with the above limits.
TRS	The TRSs implement the requirements in Section III.A of Appendix I that conformance with the guides of Appendix I be shown by calculational procedures based on models and data such that the actual exposure of a MEMBER OF THE PUBLIC through appropriate pathways is unlikely to be substantially underestimated. The dose calculation established in the ODCM for calculating the doses due to the actual release rates of radioactive noble gases in gaseous effluents are consistent with the methodology provided in Regulatory Guide 1.109, "Calculation of Annual Doses to Man from Routine Releases of Reactor Effluents for the Purpose of Evaluating Compliance with 10 CFR Part 50, Appendix I, " Revision 1, October 1977 and Regulatory Guide 1.111, "Methods for estimating Atmospheric Transport and Dispersion of Gaseous Effluents in Routine Releases from Light-Water Cooled Reactors," Revision 1, July 1977. The ODCM equations provided for determining the air doses at and beyond the SITE BOUNDARY are based upon the historical average atmospheric conditions. (References 2, 3 and 4)

(continued)

B 3.11.2.2 Dose - Noble Gases

BASES

REFERENCES

1. Technical Specification 5.5.4 - Radioactive Effluent Controls program
2. Technical Specification Spec 5.5.1 - Offsite Dose Calculation Manual
3. Regulatory Guide 1.109, "Calculation of Annual Doses to Man from Routine Releases of Reactor Effluents for the Purpose of Evaluating Compliance with 10 CFR Part 50, Appendix I", Revision 1, October 1977.
4. Regulatory Guide 1.111, "Methods for estimating Atmospheric Transport and Dispersion of Gaseous Effluents in Routine Releases from Light-Water Cooled Reactors," Revision 1, July 1977.
5. 10 CFR Part 50.

B 3.11.2.3 Dose - Iodine, Tritium, and Radionuclides in Particulates Form

BASES

TRO	This requirement is provided to implement the requirements of Sections II.C, III.A and IV.A of Appendix I, 10 CFR Part 50. The Limiting Conditions for Operation are the guides set forth in Section II.C of Appendix I. (Reference 5) This section of the TRM is also part of the ODCM (Reference 2).
Actions	The ACTION statements provide the required operating flexibility and at the same time implement the guides set forth in Section IV.A of Appendix I to assure that the releases of radioactive materials in gaseous effluents will be kept" as low as is reasonably achievable." The Special Report required under Action A.1 shall identify the cause(s) for exceeding the limit(s) and define the corrective actions that have been taken to reduce the releases and the proposed corrective actions to be taken to assure that subsequent releases will be in compliance with the above limits.
TRS	The TRSs are defined to be performed at the specified Frequency to ensure that the TRO limits are maintained. The ODCM calculational methods specified in the TRSs implement the requirements in Section III.A of Appendix I that conformance with the guides of Appendix I be shown by calculational procedures based on models and data, such that the actual exposure of a MEMBER OF THE PUBLIC through appropriate pathways is unlikely to be substantially underestimated. The ODCM calculational methods for calculating the doses due to the actual release rates of the subject materials are consistent with the methodology provided in Regulatory Guide 1.109, "Calculation of Annual Doses to Man from Routine Releases of Reactor Effluents for the Purpose of Evaluating Compliance with 10 CFR Part 50, Appendix I," Revision 1, October 1977 and Regulatory Guide 1.111, "Methods for Estimating Atmospheric Transport and Dispersion of Gaseous Effluents in Routine Releases from Light-Water-Cooled Reactors," Revision 1, July 1977. These equations also provide for determining the actual

(continued)

B 3.11.2.3 Dose - Iodine, Tritium, and Radionuclides in Particulates Form

BASES

TRS (continued) doses based upon the historical average atmospheric conditions. The release rate Requirements for iodine-131, iodine-133, tritium, and radionuclides in particulate form with half lives greater than 8 days are dependent on the existing radionuclide pathways to man in areas at and beyond the SITE BOUNDARY. The pathways which were examined in the development of these calculations were: 1) individual inhalation of airborne radionuclides, 2) deposition of radionuclides onto green leafy vegetation with subsequent consumption by man, 3) deposition onto grassy areas where milk animals and meat producing animals graze with consumption of the milk and meat by man, and 4) deposition on the ground with subsequent exposure of man. (References 2, 3 and 4)

REFERENCES

1. Technical Specification 5.5.4 - Radioactive Effluent Controls program.
2. Technical Specification 5.5.1 - Offsite Dose Calculation Manual.
3. Regulatory Guide 1.109. "Calculation of Annual Doses to Man from Routine Releases of Reactor Effluents for the Purpose of Evaluating Compliance with 10 CFR Part 50, Appendix I," Revision 1, October 1977.
4. Regulatory Guide 1.111, "Methods for Estimating Atmospheric Transport and Dispersion of Gaseous Effluents in Routine Releases from Light-Water-Cooled Reactors," Revision 1, July 1977.
5. 10 CFR Part 50

B 3.11.2.4 GASEOUS RADWASTE TREATMENT SYSTEM

BASES

TRO

This TRO ensures that the GASEOUS RADWASTE TREATMENT SYSTEM is OPERABLE and in operation to reduce radioactive materials in gaseous waste prior to discharge when the main condenser air ejector (evacuation) system is in operation. This requirement provides reasonable assurance that the releases of radioactive materials in gaseous effluents will be kept "as low as is reasonably achievable". This TRO implements the requirements of 10 CFR Part 50.36a, General Design Criterion 60 of Appendix A to 10 CFR Part 50, and the design objectives given in Section II.D of Appendix I to 10 CFR Part 50. The limits governing the use of the system were specified as a suitable fraction of the dose design objectives set forth in Sections II.B and II.C of Appendix I, 10 CFR Part 50, for gaseous effluents (Ref. 1).

This section of the TRM is part of the Offsite Dose Calculation Manual (Ref. 2) and implements the requirements of the Radiological Effluent Controls Program (Ref. 3).

ACTIONS

The ACTIONS are defined to ensure proper corrective measures are taken in response to the inoperable components.

A.1

With the GASEOUS RADWASTE TREATMENT SYSTEM inoperable, action must be taken to restore it to OPERABLE status in order to maintain radioactive releases from the main condenser as low as reasonably achievable, and in compliance with regulatory requirements. The 7 day Completion Time is reasonable to perform repairs and to maintain radioactive release objectives.

B.1

If the Required Action and Completion Time of Condition A are not met, a Special Report must be prepared and submitted to the Commission. The 30 day Completion Time is reasonable for preparation of the report. The Special Report should include the following information:

1. Identification of the inoperable equipment or subsystems and the reason for inoperability,
2. Action(s) taken to restore the inoperable equipment to OPERABLE status, and
3. Summary description of action(s) taken to prevent a recurrence.

(continued)

B 3.11.2.4 GASEOUS RADWASTE TREATMENT SYSTEM

BASES

TRS

The TRSs are performed at the specified Frequency to ensure that the GASEOUS RADWASTE TREATMENT SYSTEM is maintained OPERABLE.

TRS 3.11.2.4.1

This surveillance requires verification that the GASEOUS RADWASTE TREATMENT SYSTEM is in operation when the main condenser air ejector (evacuation) system is in operation. The Frequency of 92 days is appropriate considering the performance of monthly dose projections.

REFERENCES

1. 10 CFR Part 50
2. Technical Specification 5.5.1 - Offsite Dose Calculation Manual
3. Technical Specification 5.5.4 - Radioactive Effluent Controls program.

B 3.11.2.5 VENTILATION EXHAUST TREATMENT SYSTEM

BASES

TRS

The TRSs are performed at the specified Frequency to ensure that the VENTILATION EXHAUST TREATMENT SYSTEM is maintained OPERABLE.

TRS 3.11.2.5.1

This surveillance requires that a dose projection be performed in accordance with the methodology and parameters in the ODCM. The dose projection is performed based on the most recently available effluent data. If it is known prior to performing the dose projection that a treatment system will be out of service, and if data exists which indicates how the lack of treatment will impact effluents, these factors will be considered when performing the dose projection. The 31 day Frequency is consistent with Reference 3.

TRS 3.11.2.5.2

This surveillance verifies that the VENTILATION EXHAUST TREATMENT SYSTEM is OPERABLE by operating the system ≥ 10 minutes. Operation of the system for at least 10 minutes provides sufficient time to verify the appropriate parameters are within their normal operating range. The Frequency of 92 days is appropriate considering the performance of monthly dose projections.

This TRS is modified by a Note which states that the TRS is not required to be performed if the appropriate system has been utilized to process radioactive gaseous effluents during the previous 92 days. This allowance is appropriate because actual processing of radioactive gaseous effluents demonstrates system OPERABILITY.

REFERENCES

1. 10CFR Part 50.

2. Technical Specification 5.5.1 - Offsite Dose Calculation Manual.

3. Technical Specification 5.5.4 - Radioactive Effluent Controls program.

B 3.11.2.5 VENTILATION EXHAUST TREATMENT SYSTEM

BASES

TRO

This TRO ensures that the appropriate portions of the VENTILATION EXHAUST TREATMENT SYSTEM, as described in the Offsite Dose Calculation Manual (ODCM) are OPERABLE at all times. The TRO is modified by a Note which requires that the appropriate portions of the VENTILATION EXHAUST TREATMENT SYSTEM be used to reduce radioactive materials in gaseous waste prior to their discharge when projected doses due to gaseous effluent releases from either reactor unit to areas at and beyond the SITE BOUNDARY would exceed 0.3 mrem to any organ in a 31 day period. This requirement provides reasonable assurance that the releases of radioactive materials in gaseous effluents will be kept "as low as reasonably achievable". This TRO implements the requirements of 10 CFR Part 50.36a, General Design Criterion 60 of Appendix A to 10 CFR Part 50, and the design objectives given in Section II.D of Appendix I to 10 CFR Part 50. The limits governing the use of appropriate portions of the systems were specified as a suitable fraction of the dose design objectives set forth in Sections II.B and II.C of Appendix I, 10 CFR Part 50, for gaseous effluents (Ref. 1).

The VENTILATION EXHAUST TREATMENT SYSTEM is comprised of the following systems, as described in the ODCM:

The Unit 1 Reactor Building filtered exhaust system, including the following filters:

1F216A, 1F216B, 1F217A, 1F217B, 1F218A, 1F218B, 1F255A, 1F255B 1F257A, 1F257B, 1F258A AND 1F258B.

The Unit 2 Reactor Building filtered exhaust system, including the following filters:

2F216A, 2F216B, 2F217A, 2F217B, 2F218A, 2F218B, 2F255A, 2F255B 2F257A, 2F257B, 2F258A AND 2F258B.

The Unit 1 Turbine Building filtered exhaust system, including the following filters:

1F157A, 1F157B, 1F158A, and 1F158B.

The Unit 2 Turbine Building filtered exhaust system, including the following filters:

2F157A, 2F157B, 2F158A, and 2F158B.

(continued)

B 3.11.2.5 VENTILATION EXHAUST TREATMENT SYSTEM

BASES

TRO (continued)

The Radwaste Building filtered exhaust system, including the following filters:

0F355A and 0F355B

The Radwaste Tank Vent exhaust system, including the following filters:

0F358 and 0F359.

The S&A Hot Shop exhaust system, including the following filters:

0F716.

The Control Structure Filter Unit exhaust system, including the following filters:

0F134, 0F135, 0F137, 0F138, 0F140, 0F141, 0F143, and 0F144.

This section of the TRM is part of the ODCM (Ref. 2) and implements the requirements of the Radiological Effluent Controls Program (Ref. 3).

ACTIONS

The ACTIONS are defined to ensure proper corrective measures are taken in response to the inoperable components. Dose evaluations are performed when evolutions occur which result in an effluent path to the environment with some level of degraded treatment. In effect, degraded treatment renders the monthly dose projection per TRS 3.11.2.5.1 questionable. The dose evaluation is an estimated projection under the degraded conditions.

Dose evaluations should be performed under the following conditions:

1. When bypassing a treatment system (a preliminary evaluation prior to bypassing the filter and a follow-up evaluation after the bypass); is in place

(continued)

B 3.11.2.5 VENTILATION EXHAUST TREATMENT SYSTEM

BASES

ACTIONS (continued)

2. When placing an inoperable filter train in service (a preliminary evaluation prior to starting the system and a follow-up evaluation after the system is in service; and)
3. If a surveillance on a treatment system fails while the filter is in service; and
4. Any other event which results in degraded treatment.

The appropriate portion of the VENTILATION EXHAUST TREATMENT SYSTEM will be declared inoperable if any of the following conditions exist:

1. Failure of a surveillance test;
2. Broken or non-functional component which prevents the system from being run (e.g. both 100% fans or one 50% fan in the system); or
3. Bypass or degradation of system filtration in which effluent flow continues without full treatment.

A.1

With any portion of the VENTILATION EXHAUST TREATMENT SYSTEM inoperable, action must be taken to restore it to OPERABLE status. The 31 day Completion Time is a reasonable time frame to repair the inoperable components.

B.1

If the Required Action and Completion Time of Condition A are not met, or gaseous waste is being discharged without treatment and in excess of the TRO limits, a Special Report must be prepared and submitted to the Commission. The 30 day Completion Time is reasonable for preparation of the report. The Special Report should include the following information:

1. Identification of the inoperable equipment or subsystems and the reason for inoperability;
2. Action(s) taken to restore the inoperable equipment to OPERABLE status; and
3. Summary description of action(s) taken to prevent a recurrence.

(continued)

B 3.11.2.6 Radioactive Gaseous Effluent Monitoring Instrumentation

BASES

TRO

The radioactive gaseous effluent instrumentation is provided to monitor and control, as applicable, the releases of radioactive materials in gaseous effluents during actual or potential releases of gaseous effluents. The alarm/trip setpoints for these instruments shall be calculated in accordance with the procedures in the ODCM (Reference 2) to ensure that the alarm/trip will occur prior to exceeding the release rate limits corresponding to dose rates above background to a member of the public at or beyond the site boundary to ≤ 500 mrem/yr to the total body or to ≤ 3000 mrem/yr to the skin. The OPERABILITY and use of this instrumentation is consistent with the requirements of General Design Criteria 60, 63, and 64 of Appendix A to 10 CFR Part 50. (References 3 and 4)

OPERABILITY requires their alarm/trip setpoints set to ensure that the limits of Requirement 3.11.2.1 are not exceeded. The alarm/trip setpoints of these channels shall be determined in accordance with the methodology and parameters in the ODCM.

This section of the TRM is also part of the ODCM (Reference 2).

ACTIONS

The Actions are defined to ensure proper corrective measures are taken in response to the inoperable components.

Low range Noble Gas channel readings from the local vent monitor may be used to meet the requirement for a Noble Gas grab sample and grab sample analysis.

Noble Gas release grab samples are not required to be taken when there are no releases via that pathway. Effluent flow is to be determined by vent flow instrumentation or by a vent flow estimate every 4 hours. Continuous sample collection shall be on the same basis as described in the Bases for TRO 3.11.2.1

Monitoring may be interrupted for up to 30 minutes to perform particulate filter/iodine cartridge changeout required by TRM Table 3.11.2-1 without entering the TRO ACTIONS.

(continued)

B 3.11.2.6 Radioactive Gaseous Effluent Monitoring Instrumentation

BASES (continued)

TRS

The TRSs are defined to be performed at the specified Frequency to ensure that the monitoring instrumentation is maintained OPERABLE.

The TRSs shall be performed in accordance with the Technical Specification definition for the test with the following additional requirements:

The CHANNEL FUNCTIONAL TEST for all noble gas activity monitors shall also demonstrate that control room alarm annunciation occurs if any of the following conditions exists:

1. Instrument indicates measured levels above the alarm/trip setpoint,
2. Circuit failure, and
3. Instrument indicates a downscale failure.

The initial CHANNEL CALIBRATION for all noble gas activity monitors shall be performed using one or more of the reference standards certified by the National Institute of Standards and Technology (NIST) or using standards that have been obtained from suppliers that participate in measurement assurance activities with NIST. These standards shall permit calibrating the system over its intended range of energy and measurement range. For subsequent CHANNEL CALIBRATION, sources that have been related to the initial calibration may be used in lieu of reference standards associated with the initial calibration.

Particulate or iodine sampling required to be in continuous service will be considered to remain and have been in continuous service when its service is interrupted for a period of time not to exceed 1 hour per sampling period. For particulate and iodine sampling, this is a small fraction of the normal minimum analysis frequency.

REFERENCES

1. Technical Specification 5.5.4 - Radioactive Effluent Controls program.
2. Technical Specification 5.5.1 - Offsite Dose Calculation Manual.
3. 10 CFR Part 20.
4. 10 CFR Part 50.

B 3.11.3 Total Dose

BASES

TRO

This Requirement is provided to meet the dose limitations of 40 CFR 190 that have been incorporated into 10 CFR 20 by 46 CFR 18525. The Requirement requires the preparation and submittal of a Special Report whenever the calculated doses from plant radioactive effluents exceed twice the design objective doses of Appendix I. For sites containing up to 4 reactors, it is highly unlikely that the resultant dose to a MEMBER OF THE PUBLIC will exceed the dose limits of 40 CFR 190 if the individual reactors remain within the reporting requirement level. The Special Report will describe a course of action that should result in the limitation of the annual dose to a MEMBER OF THE PUBLIC to within the 40 CFR 190 limits. For the purposes of the Special Report, it may be assumed that the dose commitment to the MEMBER OF THE PUBLIC from other uranium fuel cycle sources is negligible, with the exception that dose contributions from other nuclear fuel cycle facilities at the same site or within a radius of 5 miles must be considered. If the dose to any MEMBER OF THE PUBLIC is estimated to exceed the requirements of 40 CFR 190, the Special Report with a request for a variance (provided the release conditions resulting in violation of 40 CFR 190 have not already been corrected), in accordance with the provisions of 40 CFR 190.11 is considered to be a timely request and fulfills the requirements of 40 CFR 190 until NRC staff action is completed. An individual is not considered a MEMBER OF THE PUBLIC during any period in which he/she is engaged in carrying out any operation that is part of the nuclear fuel cycle. Reference 3

Actions

The Actions are defined to ensure proper corrective measures are taken when requirements are not met.

Calculations required by Action B.1 shall include direct radiation contributions from both reactor units and from outside storage tanks to determine whether the limits of this TRO have been exceeded.

(continued)

B 3.11.3 Total Dose

BASES (continued)

ACTIONS (continued)

The Special Report to be issued per Action B.1 shall define the corrective action to be taken to reduce subsequent releases, to prevent recurrence of exceeding the above limits, and include the schedule for achieving conformance with the above limits. This Special Report shall include an analysis that estimates the radiation exposure (dose) to a MEMBER OF THE PUBLIC from uranium fuel cycle sources, including all effluent pathways and direct radiation, for the calendar year that includes the release(s) covered by this report. It shall also describe levels of radiation and concentrations of radioactive material involved, and the cause of the exposure levels or concentrations. If the estimated dose(s) exceeds the above limits, and if the release condition resulting in violation of 40 CFR Part 190 has not already been corrected, the Special Report shall include a request for a variance in accordance with the provisions of 40 CFR Part 190. Submittal of the report is considered a timely request, and a variance is granted until staff action on the request is complete.

TRS

The TRSs are defined to be performed at the specified Frequency to ensure that requirements are implemented.

TRS 3.11.3.1 cumulative dose contributions from liquid and gaseous effluents shall be determined in accordance with TROs 3.11.1.2, 3.11.2.2, and 3.11.2.3. The direct radiation dose is determined from the results of radiation monitoring with TLDs that is conducted by the SSES REMP. The REMP TLDs are processed quarterly. There is no requirement to show compliance with the 40CFR190 dose limits more frequently than an annual basis. Demonstration of compliance with this dose limit considers the combined dose contributions from liquid and gaseous effluents and direct radiation.

REFERENCES

1. Technical Specification 5.5.4 - Radioactive Effluent Controls program
2. Technical Specification 5.5.1 - Offsite Dose Calculation Manual
3. 40 CFR 190

B 3.11.4.1 Monitoring Program

BASES

TRO

The radiological environmental monitoring program required by this Requirement provides representative measurements of radiation and of radioactive materials in those environmental exposure pathways and for those radionuclides that lead to the highest potential radiation exposures of MEMBERS OF THE PUBLIC resulting from the station operation. This monitoring program thereby supplements the radiological effluent monitoring program by verifying that the measurable concentrations of radioactive materials and levels of radiation are not higher than expected on the basis of the effluent measurements and modeling of the environmental exposure pathways. Changes to the radiological environmental monitoring program specified in Table 3.11.4.1-1 may be made based on expected SSES operation and the results of radiological environmental monitoring during SSES operation.

The required detection capabilities for environmental sample analyses are tabulated in terms of the lower limits of detection (LLDs). The LLDs required by Table 3.11.4.1-3 are considered optimum for routine environmental measurements in industrial laboratories. It should be recognized that the LLD is defined as an *a priori* (before the fact) limit representing the capability of a measurement system and not as an *a posteriori* (after the fact) limit for a particular measurement.

Detailed discussion of the LLD, and other detection limits, can be found in HASL Procedures Manual, HASL-300 (revised annually); Currie, L. A., "Limits for Qualitative Detection and Quantitative Determination - Application to Radiochemistry" Anal. Chem. 40, 586-93 (1968); and Hartwell, J. K., "Detection Limits for Radioanalytical Counting Techniques," Atlantic Richfield Hanford Company Report ARH-SA-215 (June 1975). (Reference 1)

This section of the TRM is also part of the ODCM (Reference 2).

Actions

The Actions are defined to ensure proper corrective measures are taken when requirements are not met.

(continued)

B 3.11.4.1 Monitoring Program

BASES (continued)

ACTIONS (continued)

Per Action A.1, the Annual Radiological Environmental Operating Report shall provide a description of the reasons for not conducting the program as required and the plans for preventing a recurrence.

The Special Report submitted per Action B.1 shall identify the cause(s) for exceeding the limit(s) and define the corrective actions to be taken to reduce radioactive effluents so that the potential annual dose to a MEMBER OF THE PUBLIC is less than the calendar year limits of Requirements 3.11.1.2, 3.11.2.2 and 3.11.2.3.

Include revised figure(s) and table for the ODCM reflecting the new locations for obtaining samples per Action F.1 in the next Annual Radioactive Effluent Release Report.

TRS

The TRSs are defined to be performed at the specified frequency to ensure that the requirements are implemented. Monitoring samples collected per TRS 3.11.4.1.1 shall be from the specific locations given in the table and figure in the ODCM. (Reference 2)

Table 3.11.4.1-1

Sample Locations Specific parameters of distance and direction sector from the centerline of one reactor, and additional description where pertinent, shall be provided for each and every sample location in this Table and in a table and figure(s) in the ODCM. Refer to NUREG-0133, "Preparation of Radiological Effluent Technical Specifications for Nuclear Power Plants," October 1978, and to Radiological Assessment Branch Technical Position, Revision 1, November 1979. (Reference 3) Deviations are permitted from the required sampling schedule if specimens are unobtainable due to hazardous conditions, seasonal unavailability, malfunction of automatic sampling equipment and other legitimate reasons. If specimens are unobtainable due to sampling equipment malfunction, every effort shall be made to complete corrective action prior to the end of the next sampling

(continued)

B 3.11.4.1 Monitoring Program

BASES (continued)

TRS (continued) period. All deviations from the sampling schedule shall be documented in the Annual Radiological Environmental Operating Report. It is recognized that, at times, it may not be possible or practicable to continue to obtain samples of the media of choice at the most desired location or time.

In these instances suitable alternative media and locations may be chosen for the particular pathway in question and appropriate substitutions made within 30 days in the radiological environmental monitoring program. Identify the cause of the unavailability of samples for that pathway and identify the new location(s) for obtaining replacement samples in the next Annual Radioactive Effluent Release Report and also include in the report a revised figure(s) and table for the ODCM reflecting the new location(s).

Direct Radiation One or more instruments, such as a pressurized ion chamber, for measuring and recording dose rate continuously may be used in place of, or in addition to, integrating dosimeters. For the purposes of this table, a thermoluminescent dosimeter (TLD) is considered to be one phosphor; two or more phosphors in a packet are considered as two or more dosimeters. Film badges shall not be used as dosimeters for measuring direct radiation.

Radioiodine and Particulates - Sampling and Collection Frequency

The charcoal cartridges used in the airborne radioiodine sampling conducted as part of the radiological environmental monitoring program are designed and tested by the manufacturer to assure a high efficiency in the capture of radioiodine. Certificates from the manufacturer of the cartridges are provided with each batch of cartridges certifying the percent retention of the radiodine for stated air flows.

Radioiodine and Particulates - Particulate Sample; Waterborne - Surface, Ground, Sediment; Food Products Gamma isotopic analysis means the identification and quantification of gamma- emitting radionuclides that may be attributable to the effluents from the facility.

Waterborne - Surface The "upstream sample" shall be taken at a distance beyond significant influence of the discharge. The "downstream" sample shall be taken in the discharge line.

(continued)

B 3.11.4.1 Monitoring Program

BASES (continued)

TRS (continued)

Waterborne - Drinking - Sampling and Collection Frequency A composite sample is one in which the quantity (aliquot) of liquid sampled is proportional to the quantity of flowing liquid and in which the method of sampling employed results in a specimen that is representative of the liquid flow. In this program composite samples shall be collected at time intervals that are very short (e.g., hourly) relative to the compositing period (e.g., monthly) in order to assure obtaining a representative sample.

Waterborne - Ground - Samples and Sample Locations Groundwater samples shall be taken when this source is tapped for drinking or irrigation purposes in areas where the hydraulic gradient or recharge properties are suitable for contamination.

Drinking Water - I-131 Analyses Calculation of the dose projected from I-131 in drinking water to determine if I-131 analyses of the water are required shall be performed for the maximum organ and age group using the methodology and parameters of the ODCM.

Food Products - Sampling and Collection Frequency If harvest occurs more than once a year, sampling shall be performed during each discrete harvest. If harvest occurs continuously, sampling shall be monthly. Attention shall be paid to including samples of tuborous and root food products.

Table 3.11.4.1-3

This list does not mean that only these nuclides are to be considered. Other peaks that are identifiable at 95% confidence level together with those of the above nuclides, shall also be analyzed and reported in the Annual Radiological Environmental Operating report.

Required detection capabilities for thermoluminescent dosimeters used for environmental measurements are given in Regulatory Guide 4.13. (Reference 4)

(continued)

B 3.11.4.1 Monitoring Program

BASES (continued)

TRS (continued)

The LLD is defined, for purpose of these Requirements, as the smallest concentration of radioactive material in a sample that will yield a net count (above system background) that will be detected with 95% probability with only 5% probability of falsely concluding that a blank observation represents a "real" signal.

For a particular measurement system (which may include radiochemical separation):

$$LLD = \frac{4.66 s_b}{E \bullet V \bullet 2.22 \bullet Y \bullet \exp(-\lambda \Delta t)}$$

Where:

LLD is the *a priori* lower limit of detection as defined above (as picrocuries per unit mass or volume),
s_b is the standard deviation of the background counting rate or of the countingrate of a blank sample as appropriate (as counts per minute),
E is the counting efficiency, as counts per disintegration,
V is the sample size, in units of mass or volume,
2.22 is the number of disintegrations per minute per picrocurie,
Y is the fractional radiochemical yield, when applicable,
λ is the radioactive decay constant for the particular radionuclide, and
Δt for environmental samples is the elapsed time between sample collection (or end of the sample collection period) and time of counting.

Typical values of E, V, Y, and Δt should be used in the calculation.

(continued)

B 3.11.4.1 Monitoring Program

BASES (continued)

TRS (continued

It should be recognized that the LLD is defined as *a priori* (before the fact) limit representing the capability of a measurement system and not as an *a posteriori* (after the fact) limit for a particular measurement. Analyses shall be performed in such a manner that the stated LLDs will be achieved under routine conditions. Occasionally background fluctuations, unavoidably small sample sizes, the presence of interfering nuclides, or other uncontrollable circumstances may render these LLDS unachievable. In such cases, the contributing factors shall be identified and described in the Annual Radiological Environmental Operating Report.

REFERENCES

1. HASL Procedures Manual, HASL-300 (revised annually); Curie, L.A., "Limits for Qualitative Detection and Quantitative Determination - Application to Radiochemistry" Anal. Chem. 40, 586-93 (1968); and Hartwell, J. K., "Detection Limits for Radioanalytical Counting Techniques," Atlantic Richfield Hanford Company Report ARH-SA-215 (June 1975)Offsite Dose Calculation Manual.
2. Technical Specification 5.5.1 - Offsite Dose Calculation Manual.
3. NUREG-0133, "Preparation of Radiological Effluent Technical Specifications for Nuclear Power Plants," October 1978, and to Radiological Assessment Branch Technical Position, Revision 1, November 1979.
4. Regulatory Guide 4.13.

B 3.11.4.2 Land Use Census

BASES

TRO

The Land Use Census shall identify within a distance of 8 km (5 miles) the location in each of the 16 meteorological sectors of the nearest milk animal, the nearest residence and the nearest garden of greater than $50m^2$ ($500ft^2$) producing broad leaf vegetation.

This Requirement is provided to ensure that changes in the use of areas at and beyond the SITE BOUNDARY are identified and that modifications to the monitoring program are made if required by the results of this census. The best information from the door-to-door survey, aerial survey or consulting with local agricultural authorities or any combination of these methods shall be used. This census satisfies the requirements of Section IV.B.3 of Appendix I to 10 CFR Part 50. Restricting the census to gardens of greater than 500 square feet provides assurance that significant exposure pathways via leafy vegetables will be identified and monitored since a garden of this size is the minimum required to produce the quantity (26 kg/year) of leafy vegetables assumed in Regulatory Guide 1.109 for consumption by a child. To determine this minimum garden size, the following assumptions were used: 1) that 20% of the garden was used for growing broad leaf vegetation (i.e., similar to lettuce and cabbage), and 2) a vegetation yield of 2 kg/square meter. (Reference 1 and 2)

Broad leaf vegetation sampling of at least three different kinds of vegetation may be performed at the site boundary in each of two different direction sectors with the highest predicted D/Qs in lieu of the garden census. Specifications for broad leaf vegetation sampling in Table 3.11.4.1-1 item 4c shall be followed, including analysis of control samples.

This section of the TRM is also part of the ODCM (Reference 3).

Actions

The Actions are defined to ensure proper corrective measures are taken in when requirements are not met.

(continued)

B 3.11.4.2 Land Use Census

BASES (continued)

ACTIONS (continued)	The sampling location(s), excluding the control station location, having the lowest calculated dose, or dose commitment(s) (via the same exposure pathway) may be deleted from the monitoring program after October 31 of the year in which the land use census was conducted.
TRS	The TRSs are defined to be performed at the specified Frequency to ensure that the requirements are implemented. The Land Use Census shall be conducted during the growing season at least once per 12 months using that information that will provide the best results, such as by a door-to-door survey, aerial survey, or by consulting local agriculture authorities. The results of the land use census shall be included in the Annual Radiological Environmental Operating Report.
REFERENCES	1 10 CFR Part 50 2 Regulatory Guide 1.109, "Calculation of Annual Doses to Man from Routine Releases of Reactor Effluents for the Purpose of Evaluating Compliance with 10 CFR Part 50, Appendix I," Revision 1, October 1977 3 Technical Specification 5.5.1 - Offsite Dose Calculation Manual

B 3.11.4.3 Interlaboratory Comparison Program

BASES

TRO	The Interlaboratory Comparison Program shall be accepted by the Commission. The requirement for participation in an Interlaboratory Comparison Program is provided to ensure that independent checks on the precision and accuracy of the measurements of radioactive material in environmental sample matrices are performed as part of the quality assurance program for environmental monitoring in order to demonstrate that the results are reasonably valid for the purpose of Section IV.B.2 of Appendix I to 10 CFR Part 50. (Reference 1) This part of the TRM is also part of the ODCM (Reference 2)
Actions	The Actions are defined to ensure proper corrective measures are taken in response to the detection of unacceptably large deviations (systematic biases) from known values for the quantities being measured. The corrective actions taken to prevent a recurrence shall be reported to the Commission in the Annual Radiological Environmental Operating Report.
TRS	The TRSs are defined to be performed at the specified Frequency to ensure that the requirements are implemented.
REFERENCES	1. 10 CFR Part 50 2. Technical Specification 5.5.1 - Offsite Dose Calculation Manual

3.6 Containment

3.6.1 VENTING or PURGING

TRO 3.6.1 VENTING or PURGING of the primary containment shall be performed only with the following conditions established:

1. Both Standby Gas Treatment Systems shall be OPERABLE in accordance with LCO 3.6.4.3 "Standby Gas Treatment (SGT) System" and whenever the purge system is in use during MODE 1, 2, or 3, only one of the SGT System trains may be used.

2. LCO 3.3.6.1 "Primary Containment Isolation Instrumentation" Function 2.e "SGTS Exhaust Radiation - High" shall be OPERABLE.

APPLICABILITY: Whenever primary containment VENTING or PURGING is in progress.

ACTIONS

CONDITION	REQUIRED ACTION	COMPLETION TIME
A. VENTING and PURGING requirements not met.	A.1 Suspend all VENTING and PURGING of the primary containment.	Immediately

TECHNICAL REQUIREMENT SURVEILLANCE

SURVEILLANCE		FREQUENCY
TRS 3.6.1.1	Verify that the requirements of TRO 3.6.1 "VENTING and PURGING" are met.	Within 4 hours prior to start of VENTING or PURGING of the primary containment AND 12 hours

B 3.6.1 VENTING or PURGING

BASES

TRO

This TRO establishes the requirements necessary to VENT or PURGE the Primary Containment to provide reasonable assurance that releases from the Primary Containment during purging operations will be maintained As Low As Reasonably Achievable for unrestricted areas. The following requirements are specified:

Flow must be maintained through Standby Gas Treatment System and when venting or purging both SGTS must be OPERABLE and only one can be aligned for purging. This requirement is established to ensure all flow is filtered through the SGTS System, to minimize the chance of an inadvertent release and to ensure, during purging, SGTS capability is maintained by ensuring the redundant system is available.

Ventilation evolutions to support habitability of the Drywell or the Suppression Chamber performed in Modes 4 and 5 shall be performed with the "SGTS Exhaust Radiation - High" Isolation Instrumentation OPERABLE. This is required to ensure all releases are monitored and any detection of excessive radiation results in the automatic termination of the evolution. In MODES 1, 2, or 3, this instrument Function is required to be OPERABLE per Technical Specification, so no redundant requirement is necessary in this TRO. (Reference 2)

PURGING and VENTING as defined in the Technical Requirements Manual Definitions refer to the controlled process of discharging air or gas from a "confinement" in order to maintain various operating conditions, either with or without replacement air or gas.

The basis for this requirement is to provide a reasonable assurance that releases from the Primary Containment purging operations will not exceed the annual dose limits of 10 CFR Part 20 for unrestricted areas.

(continued)

B 3.6.1 VENTING or PURGING

BASES (continued)

TRO (continued)	Any ventilation evolutions performed during MODES 4, 5 or defueled, to support habitability of the Drywell or the Suppression Chamber, with any of the Containment hatches removed or access doors open with interlocks defeated, do not constitute VENTING or PURGING as defined. This is due to the fact that in such cases, the Drywell or the Suppression Chamber is not a "confinement". Therefore, the provisions of this TRO requiring two OPERABLE trains of the Standby Gas Treatment System are not applicable.
ACTIONS	The Actions are defined to ensure proper corrective measures are taken in response to the non-compliance with the TRO requirements.
TRS	The TRSs are defined to be performed at the specified Frequency to ensure compliance with the TRO requirements
REFERENCES	1. 10 CFR Part 20 2. FSAR Section 6.5.1.1

3.11 Radioactive Effluents

3.11.1 Liquid Effluents

3.11.1.1 Liquid Effluents Concentration

TRO 3.11.1.1 The concentration of radioactive material released in liquid effluents to UNRESTRICTED AREAS (See FSAR Section 2.1.1.3) shall be limited to 10 times the concentrations specified in Appendix B, Table 2, Column 2 to 10CFR 20.1001-20.2402 for radionuclides other than dissolved or entrained noble gases. For dissolved or entrained noble gases, the concentration shall be limited to 2E-4 μCi/ml total activity.

APPLICABILITY: At all times.

ACTIONS

CONDITION	REQUIRED ACTION	COMPLETION TIME
A. Concentration of radioactive material released in liquid effluents to UNRESTRICTED AREAS (See FSAR Section 2.1.1.3) exceeds the limits specified in TRO 3.11.1.1	A1. Restore the concentration to within the above limits	Immediately

TECHNICAL REQUIREMENT SURVEILLANCE

SURVEILLANCE		FREQUENCY
TRS 3.11.1.1.1	The radioactivity content of each batch of radioactive liquid waste shall be determined by sampling and analysis in accordance with Table 3.11.1.1-1. The results of pre-release analyses shall be used with the calculational methods and parameters in the ODCM to assure that the concentration at the point of release is maintained within the limits of TRO 3.11.1.1	Prior to each release
TRS 3.11.1.1.2	Post release analyses of samples composited from batch releases shall be performed in accordance with Table 3.11.1.1-1. The results of the previous post-release analyses shall be used with the calculational methods and parameters in the ODCM to assure that the concentrations at the point of release were maintained within the limits of TRO 3.11.1.1	According to the ODCM

TABLE 3.11.1.1-1
RADIOACTIVE LIQUID WASTE SAMPLING AND ANALYSIS PROGRAM

Liquid Release Type	Sampling Frequency	Minimum Analysis Frequency	Type of Activity Analysis	Lower Limit of Detection (LLD) (μCi/ml)
Batch Waste Release Tanks	Prior to Release Each Batch	Prior to release Each Batch	Principal Gamma Emitters	5E-7
			I-131	1E-6
	Prior to Release One Batch per month	31 days	Dissolved and Entrained Gases (Gamma Emitters)	1E-5
	Prior to Release Each Batch	31 days Composite[a]	H-3	1E-5
			Gross Alpha	1E-7
	Prior to Release Each Batch	92 days Composite[a]	Sr-89, Sr-90	5E-8
			Fe-55	1E-6

[a] Minimum frequency for initiation of required analysis.

3.11 Radioactive Effluents

3.11.1 Liquid Effluents

3.11.1.2 Liquid Effluents Dose

TRO 3.11.1.2 The dose or dose commitment to a MEMBER OF THE PUBLIC from radioactive materials in liquid effluents released from each reactor unit UNRESTRICTED AREAS shall be limited:

a. During any calendar quarter to less than or equal to 1.5 mrems to the total body and to less than or equal to 5 mrems to any organ.

AND

b. During any calendar year to less than or equal to 3.0 mrems to the total body and to less than or equal to 10 mrems to any organ.

APPLICABILITY: At all times.

ACTIONS

CONDITION	REQUIRED ACTION	COMPLETION TIME
A. Calculated dose from the release of radioactive materials in liquid effluents exceeding any of the above limits	A1. Prepare and submit a Special Report to the Commission	Within 30 days

TECHNICAL REQUIREMENT SURVEILLANCE

SURVEILLANCE	FREQUENCY
TRS 3.11.1.2.1 Determine cumulative dose contributions from liquid effluents for the current calendar quarter and the current calendar year in accordance with methodology and parameters in the ODCM	31 days

3.11 Radioactive Effluents

3.11.1 Liquid Effluents

3.11.1.3 Liquid Waste Treatment System

TRO 3.11.1.3 The appropriate portions of the Liquid Radwaste Treatment System, as described in the ODCM, shall be OPERABLE. Appropriate portions of the Liquid Waste Treatment System shall be used to reduce the radioactive materials in liquid effluent, prior to their discharge, when projected doses due to liquid effluent releases from each reactor unit to UNRESTRICTED AREAS would exceed 0.06 mrem to the total body or 0.2 mrem to any organ in a 31 day period.

APPLICABILITY: At all times.

ACTIONS

CONDITION	REQUIRED ACTION	COMPLETION TIME
A. Liquid effluent releases being discharged without treatment and in excess of the TRO limit.	A1. Prepare and submit a Special Report to the Commission	30 days

TECHNICAL REQUIREMENT SURVEILLANCE

SURVEILLANCE		FREQUENCY
TRS 3.11.1.3.1	Project doses due to liquid releases from each reactor unit to the UNRESTRICTED AREAS in accordance with the methodology and parameters in the ODCM.	31 days
TRS 3.11.1.3.2	----------NOTE---------- Not required to be performed if the liquid radwaste system has been utilized to process radioactive liquid during the previous 92 days ---------- Demonstrate the Liquid Radwaste (LRW) Treatment System OPERABLE by operating LRW Treatment System equipment for at least 10 minutes.	92 days

3.11 Radioactive Effluents

3.11.1 Liquid Effluents

3.11.1.4 Liquid Radwaste Effluent Monitoring Instrumentation

TRO 3.11.1.4 The Radioactive Liquid Radwaste Effluent Monitoring Instrumentation channels shown in Table 3.11.1.4-1 shall be OPERABLE with their setpoints established in accordance with the ODCM to ensure that the alarm/trip will occur prior to exceeding the limits of TRO 3.11.1.1.

APPLICABILITY: At all times.

ACTIONS

----------NOTE----------

1. Separate condition entry is allowed for each channel
2. The provisions of TRO 3.0.4 are not applicable

CONDITION	REQUIRED ACTION	COMPLETION TIME
A. One or more radioactive liquid effluent monitoring instrumentation alarm/trip channels setpoint less conservative than the limits allowed by TRO 3.11.1.1	A.1 Suspend the release of radioactive liquid effluents monitored by the affected channel	Immediately
	OR	
	A.2 Declare the channel inoperable	Immediately

(continued)

ACTIONS (continued)

CONDITION	REQUIRED ACTION	COMPLETION TIME
B. Liquid Radwaste releases are necessary and Effluent Line Gross Radioactivity Monitoring Instrumentation inoperable.	B.1 Analyze at least two independent samples in accordance with TRO 3.11.1.1	Prior to initiating each release.
	AND	
	B.2 Independently determine release rates for samples analyzed per Action B.1	Prior to initiating each release.
	AND	
	B.3 Perform and independently verify discharge valve lineup.	Prior to initiating each release.
	AND	
	B.4 Restore monitoring instrumentation	14 days
C. Liquid Radwaste releases are not in progress and the Gross Radioactivity Monitoring instrumentation is inoperable because the inoperable channel is caused by a discharge valve interlock in an off-normal condition or not functioning.	C.1 Maintain at least one isolation valve closed between each source of release and the liquid radwaste discharge valve.	Within 1 hour of securing from release or discovery of inoperable instrument.

(continued)

ACTIONS (continued)

CONDITION	REQUIRED ACTION	COMPLETION TIME
D. Liquid Radwaste releases are necessary and Effluent Line or Cooling Tower Blowdown Flow Monitoring Instrumentation inoperable.	D.1 Estimate Flow Rate. AND D.2 Restore Monitoring Instrumentation.	Once per 4 hours during releases. 30 days
E. Liquid Radwaste releases are not in progress and cooling tower blowdown flow monitoring instrumentation is inoperable because the inoperable channel is a discharge valve interlock in an off-normal condition or not functioning.	E.1 Maintain at least one isolation valve closed between each source of release and the liquid radwaste discharge valve.	Within 1 hour of securing release or discovery of inoperable instrument.
F. Required Action and Associated Completion Time of Conditions B, C, D, or E not met.	F.1 --------NOTE---------- Only applicable to Condition B ---------- Suspend release of radioactive effluents via this pathway AND F.2 Explain why the inoperability was not corrected in a timely manner	Immediately In the next Annual Radioactive Effluent Release Report per TS Section 5.6

TECHNICAL REQUIREMENT SURVEILLANCE

----------NOTE----------

Refer to Table 3.11.1.4-1 to determine which TRSs apply for each Monitoring Function.

SURVEILLANCE		FREQUENCY
TRS 3.11.1.4.1	Perform CHANNEL CHECK.	24 hours
TRS 3.11.1.4.2	Perform CHANNEL CHECK including a source check.	Prior to commencing release
TRS 3.11.1.4.3	Perform CHANNEL FUNCTIONAL TEST	92 days
TRS 3.11.1.4.4	Perform CHANNEL CALIBRATION	24 months

TABLE 3.11.1.4-1
LIQUID RADWASTE EFFLUENT MONITORING INSTRUMENTATION

FUNCTION	REQUIRED CHANNELS	SURVEILLANCE REQUIREMENTS
1. GROSS RADIOACTIVITY MONITORS PROVIDING AUTOMATIC TERMINATION OF RELEASE		
a. Liquid Radwaste Effluent Line	1	TRS 3.11.1.4.2 TRS 3.11.1.4.3 TRS 3.11.1.4.4
2. FLOW RATE MEASUREMENT DEVICES		
a. Liquid Radwaste Effluent Line	1	TRS 3.11.1.4.1[a] TRS 3.11.1.4.3 TRS 3.11.1.4.4
b. Cooling Tower Blowdown	1	TRS 3.11.1.4.1[a] TRS 3.11.1.4.3 TRS 3.11.1.4.4

[a] Only required when performing batch releases.

3.11 Radioactive Effluents

3.11.1 Liquid Effluents

3.11.1.5 Radioactive Liquid Process Monitoring Instrumentation

TRO 3.11.1.5 The Radioactive Liquid Process Monitoring Instrumentation channels shown in Table 3.11.1.5-1 shall be OPERABLE with their setpoints established in accordance with the ODCM to ensure the alarm will occur prior to exceeding the limits of TRO 3.11.1.1.

APPLICABILITY: As specified in Table 3.11.1.5-1.

ACTIONS

----------NOTE----------

1. Separate condition entry is allowed for each channel
2. The provisions of TRO 3.0.4 are not applicable

CONDITION	REQUIRED ACTION	COMPLETION TIME
A. One or more Radioactive Liquid Process Monitoring Instrumentation alarm/trip channels setpoint less conservative than the limits allowed by TRO 3.11.1.1.	A.1 Suspend the release of liquid effluents monitored by the affected channel	Immediately
	OR	
	A.2 Declare the channel inoperable	Immediately

(continued)

ACTIONS (continued)

CONDITION	REQUIRED ACTION	COMPLETION TIME
B. Radioactive Liquid Process Monitoring Instrumentation otherwise inoperable.	B.1.1 Suspend the release of liquid effluents monitored by the affected channel.	Immediately
	OR	
	B.1.2 Analyze grab samples for isotopic activity to the required LLDs for liquid effluents (Table 3.11.1.1-1).	Once per 8 hours when the associated pathway is in service
	AND	
	B.2 Restore monitoring instrumentation	30 days
C. Required Action and Associated Completion Time of Conditions B not met.	C.1 Explain why the inoperability was not corrected in a timely manner	In the next Annual Radioactive Effluent Release Report per TS Section 5.6
D. RHR Heat Exchanger to be drained to the spray pond.	D.1 Analyze grab samples from the RHR Heat Exchanger for isotopic activity to the required LLDs for liquid effluents (Table 3.11.1.1-1).	Prior to draining RHR Heat Exchanger to the spray pond.

TECHNICAL REQUIREMENT SURVEILLANCE

----------NOTE----------

Refer to Table 3.11.1.5-1 to determine which TRSs apply for each Monitoring Function.

SURVEILLANCE		FREQUENCY
TRS 3.11.1.5.1	Perform CHANNEL CHECK.	24 hours
TRS 3.11.1.5.2	Perform a Source Check	31 days
TRS 3.11.1.5.3	Perform CHANNEL FUNCTIONAL TEST	92 days
TRS 3.11.1.5.4	Perform CHANNEL CALIBRATION	24 months

TABLE 3.11.1.5-1
RADIOACTIVE LIQUID PROCESS MONITORING INSTRUMENTATION

FUNCTION	REQUIRED CHANNELS	APPLICABILITY	SURVEILLANCE REQUIREMENTS
GROSS RADIOACTIVITY MONITORS NOT PROVIDING AUTOMATIC TERMINATION OF RELEASE			
1. Service Water System Effluent Line	1	(a)	TRS 3.11.1.5.1 TRS 3.11.1.5.2 TRS 3.11.1.5.3 TRS 3.11.1.5.4
2. Supplemental Decay Heat Removal Service Water	1	(a)	TRS 3.11.1.5.1 TRS 3.11.1.5.2 TRS 3.11.1.5.3 TRS 3.11.1.5.4
3. RHR Service Water System Effluent Line.	1/Loop	(b)	TRS 3.11.1.5.1 TRS 3.11.1.5.2 TRS 3.11.1.5.3 TRS 3.11.1.5.4

(a) System aligned through Fuel Pool Cooling Heat Exchanger. Alignment change between Service Water System Effluent Line and Supplemental Decay Heat Removal Service Water is not considered to be a change in the applicable condition.

(b) At all times

3.11 Radioactive Effluents

3.11.2 Gaseous Effluents

3.11.2.1 Dose Rate

TRO 3.11.2.1 The dose rate due to radioactive materials released in gaseous effluents to areas at and beyond the SITE BOUNDARY (See FSAR Section 2.1.1.3) shall be limited to the following:

I. For Noble Gases:

A. Less than or equal to 500 mrems/yr to the total body, and

B. Less than or equal to 3000 mrems/yr to the skin

AND

II. For iodine-131, iodine-133, tritium, and all radionuclides in particulate form with half lives greater than 8 days

A. Less than or equal to 1500 mrem/yr to any organ (Inhalation pathways only.)

APPLICABILITY: At all times.

ACTIONS

CONDITION	REQUIRED ACTION	COMPLETION TIME
A. Dose rate(s) exceed the above limits	A.1 Restore the release rate to within the above limits	Immediately

TECHNICAL REQUIREMENT SURVEILLANCE

SURVEILLANCE		FREQUENCY
TRS 3.11.2.1.1	Determine the dose rate due to noble gases in gaseous effluents.	See ODCM
TRS 3.11.2.1.2	The dose rate due to iodine-131, iodine-133, tritium, and all radionuclides in particulate form with half-lives greater than 8 days in gaseous effluents shall be determined to be within the limits in accordance with the methodology and parameters of the ODCM by obtaining representative samples and performing analyses in accordance with the sampling and analysis program specified in Table 3.11.2.1-1	See Table 3.11.2.1-1

TABLE 3.11.2.1-1
RADIOACTIVE GASEOUS EFFLUENT SAMPLING AND ANALYSIS

Gaseous Release Type	Sampling Method and Frequency	Minimum Analysis Frequency	Type of Activity Analysis	Lower Limit of Detection (LLD) (µCi/ml)
A. Containment Purge	Prior to each purge Grab Sample	Prior to each purge	Principal Noble Gas Gamma Emitters	1E-4
			H-3	1E-6
B. Reactor Building Vents, Turbine Building Vents, and SGTS	31 days [a] Grab Sample	31 day [a]	Principal Noble Gas Gamma Emitters	1E-4
			H-3	1E-6
	Continuous [b] Iodine Cartridge Sample	7 days [c]	I-131	1E-12
			I-133	1E-10
	Continuous [b] Particulate sample	7 days [c]	Principal Particulate Gamma Emitters I-131	1E-11
	Continuous [b] Particulate Sample	92 days Composite [d]	Gross Alpha	1E-11
	Continuous [b] Particulate sample	92 days Composite [d]	Sr-89, Sr-90	1E-11
	Continuous [b]	Noble Gas Monitor	Noble Gases, Gross Beta or Gamma	1E-6 (Xe-133 equivalent)

(a) Noble gas analyses, shall be performed following shutdown, startup, or a THERMAL POWER change exceeding 15% of the RATED THERMAL POWER within a 1-hour period.

(b) The ratio of the sample flow rate to the sampled stream flow rate shall be known for the time period covered by each dose or dose rate calculation made in accordance with TROs 3.11.2.1, 3.11.2.2, and 3.11.2.3.

(c) Samples shall be changed at least once per 7 days and analyses shall be completed within 48 hours after changing, or after removal from sampler. Sampling shall also be performed at least once per 24 hours for at least 7 days following each shutdown, startup, or THERMAL POWER change exceeding 15% of RATED THERMAL POWER in 1 hour, and analyses, completed within 48 hours of changing. When samples collected for ≤ 24 hours are analyzed, the corresponding LLDs may be increased by a factor of 10.

(d) Minimum frequency for initiation of required analysis.

3.11 Radioactive Effluents

3.11.2 Gaseous Effluents

3.11.2.2 Dose - Noble Gases

TRO 3.11.2.2 The air dose due to noble gases released in gaseous effluents, from each reactor unit, to areas at and beyond the SITE BOUNDARY (See FSAR Section 2.1.1.3) shall be limited to the following:

a. During any calendar quarter: Less than or equal to 5 mrads for gamma radiation and less than or equal to 10 mrads for beta radiation, and

b. During any calendar year: Less than or equal to 10 mrads for gamma radiation and less than or equal to 20 mrads for beta radiation.

APPLICABILITY: At all times.

ACTIONS

CONDITION	REQUIRED ACTION	COMPLETION TIME
A. The calculated air dose exceeds the limits.	A.1 Prepare and submit a Special Report to the Commission	30 days

TECHNICAL REQUIREMENT SURVEILLANCE

SURVEILLANCE	FREQUENCY
TRS 3.11.2.2.1 Determine the cumulative dose contributions for the current calendar quarter and current calendar year for these sources in accordance with the methodology and parameters in the ODCM	31 days

3.11 Radioactive Effluents

3.11.2 Gaseous Effluents

3.11.2.3 Dose - Iodine, Tritium, and Radionuclides in Particulate Form

TRO 3.11.2.3 The dose to a MEMBER OF THE PUBLIC from iodine-131, iodine-133, tritium, and all radionuclides in particulate form with half-lives greater than 8 days in gaseous effluents released, from each reactor unit, to areas at and beyond the SITE BOUNDARY shall be limited to the following:

a. During any calendar quarter: Less than or equal to 7.5 mrems to any organ and,

b. During any calendar year: Less than or equal to 15 mrems to any organ.

APPLICABILITY: At all times.

ACTIONS

CONDITION	REQUIRED ACTION	COMPLETION TIME
A. The calculated dose from the release exceeds the limits.	A.1 Prepare and submit a Special Report to the Commission.	30 days

TECHNICAL REQUIREMENT SURVEILLANCE

SURVEILLANCE	FREQUENCY
TRS 3.11.2.3.1 Determine the cumulative dose contributions for the current calendar quarter and current calendar year for these sources in accordance with the methodology and parameters in the ODCM.	31 days

3.11 Radioactive Effluents

3.11.2 Gaseous Effluents

3.11.2.4 GASEOUS RADWASTE TREATMENT SYSTEM

TRO 3.11.2.4 The GASEOUS RADWASTE TREATMENT SYSTEM shall be OPERABLE and in operation.

APPLICABILITY: When the main condenser air ejector (evacuation) system is in operation.

ACTIONS

CONDITION	REQUIRED ACTION	COMPLETION TIME
A. GASEOUS RADWASTE TREATMENT SYSTEM inoperable.	A.1 Restore GASEOUS RADWASTE TREATMENT SYSTEM to OPERABLE status.	7 days
B. Required Action and associated Completion Time not met.	B.1 Prepare and submit a Special Report to the Commission.	30 days

TECHNICAL REQUIREMENT SURVEILLANCE

SURVEILLANCE		FREQUENCY
TRS 3.11.2.4.1	Verify GASEOUS RADWASTE TREATMENT SYSTEM to be in operation.	92 days

3.11 Radioactive Effluents

3.11.2 Gaseous Effluents

3.11.2.5 VENTILATION EXHAUST TREATMENT SYSTEM

TRO 3.11.2.5 The appropriate portions of the VENTILATION EXHAUST TREATMENT SYSTEM, as described in the Offsite Dose Calculation Manual (ODCM), shall be OPERABLE.

----------NOTE----------
Appropriate portions of the VENTILATION EXHAUST TREATMENT SYSTEM shall be used to reduce radioactive materials in gaseous waste prior to their discharge when projected doses due to gaseous effluent releases from either reactor unit to areas at and beyond the SITE BOUNDARY would exceed 0.3 mrem to any organ in a 31 day period.

APPLICABILITY: At all times.

ACTIONS

CONDITION	REQUIRED ACTION	COMPLETION TIME
A. VENTILATION EXHAUST TREATMENT SYSTEM inoperable.	A.1 Restore VENTILATION EXHAUST TREATMENT SYSTEM to OPERABLE status.	31 days
B. Required Action and Associated Completion Time of Condition A not met. OR Gaseous waste being discharged without treatment and in excess of TRO limits.	B.1 Prepare and submit a Special Report to the Commission.	30 days

TECHNICAL REQUIREMENT SURVEILLANCE

SURVEILLANCE		FREQUENCY
TRS 3.11.2.5.1	Perform dose projection due to gaseous releases from each reactor unit to areas at and beyond the SITE BOUNDARY in accordance with the methodology and parameters in the ODCM.	31 days
TRS 3.11.2.5.2	----------NOTE---------- Not required if the appropriate system has been utilized to process radioactive gaseous effluents during the previous 92 days. ---------- Verify VENTILATION EXHAUST TREATMENT SYSTEM is OPERABLE by operating the system ≥ 10 minutes.	92 days

3.11 Radioactive Effluents

3.11.2 Gaseous Effluents

3.11.2.6 Radioactive Gaseous Effluent Monitoring Instrumentation

TRO 3.11.2.6 The radioactive gaseous effluent monitoring instrumentation channels shown in Table 3.11.2.6-1 shall be OPERABLE with their setpoints established in accordance with the ODCM to ensure that the limits of Requirement 3.11.2.1 are not exceeded.

APPLICABILITY: According to Table 3.11.2.6-1

ACTIONS

NOTE

1. Separate condition entry is allowed for each channel.

CONDITION	REQUIRED ACTION	COMPLETION TIME
A. Radioactive gaseous effluent monitoring instrumentation channel alarm/trip setpoint less conservative than required to ensure that the limits of Requirement 3.11.2.1 are not exceeded	A.1 Suspend the release of radioactive gaseous effluents monitored by the affected channel OR A.2 Declare the channel inoperable	Immediately Immediately

(continued)

ACTIONS (continued)

CONDITION	REQUIRED ACTION	COMPLETION TIME
B. Reactor Building Ventilation System Noble Gas Activity Monitor low range channel inoperable	B.1 Take grab samples AND B.2 Analyze grab samples for isotopic activity to the required LLDs for principal noble gas gamma emitters (Table 3.11.2.1-1) AND B.3 Restore monitoring instrumentation.	Once per 8 hours while release is in progress. Within 24 hours of grab sample 30 days
C. Deleted		
D. Reactor Building Ventilation Monitoring System Effluent System Flow Rate Monitor or Sampler Flow Rate Monitor inoperable	D.1 Estimate flow rate. AND D.2 Restore monitoring instrumentation.	Once per 4 hours while release is in progress 30 days

(continued)

ACTIONS (continued)

CONDITION	REQUIRED ACTION	COMPLETION TIME
E. Turbine Building Ventilation System Noble Gas Activity Monitor low range channel inoperable	E.1 Verify mechanical vacuum pump is not in operation. AND E.2 Take grab samples. AND E.3 Analyze grab samples for isotopic activity to the required LLDs for principal noble gas gamma emitters (Table 3.11.2.1-1). AND E.4 Restore monitoring instrumentation	Immediately Once per 8 hours while release is in progress Within 24 hours after sample 30 days
F. Deleted		
G. Turbine Building Ventilation Monitoring System Effluent System Flow Rate Monitor or Sampler Flow Rate Monitor inoperable	G.1 Estimate flow rate. AND G.2 Restore monitoring instrumentation	Once per 4 hours while release is in progress. 30 days

(continued)

ACTIONS (continued)

CONDITION	REQUIRED ACTION	COMPLETION TIME
H. Standby Gas Treatment System Noble Gas Activity Monitor low range channel inoperable	H.1 Take grab samples. AND H.2 Analyze grab samples for isotopic activity to the required LLDs for principal noble gas gamma emitters (Table 3.11.2.1-1). AND H.3 Restore monitoring instrumentation.	Once per 4 hours while release is in progress. Within 24 hours of grab sample being taken. 30 days
I. Deleted		
J. SGTS Ventilation Monitoring System Effluent flow rate monitor or sample flow rate monitor Inoperable.	J.1 Estimate flow rate. AND J.2 Restore monitoring Instrumentation.	Once per 4 hours while release is in progress. 30 days

(continued)

ACTIONS (continued)

CONDITION	REQUIRED ACTION	COMPLETION TIME
K. Required Actions and Completion Times not met for Conditions B through J.	K.1 Explain why this inoperability was not corrected in a timely manner.	In the next Annual Radioactive Effluents Release Report per TS Section 5.6.

TECHNICAL REQUIREMENT SURVEILLANCE

NOTE

Refer to Table 3.11.2.6-1 to determine which TRSs apply for each Monitoring Function.

SURVEILLANCE		FREQUENCY
TRS 3.11.2.6.1	Perform CHANNEL CHECK	24 hours
TRS 3.11.2.6.2	Deleted	
TRS 3.11.2.6.3	Perform Source Check	31 days
TRS 3.11.2.6.4	Perform CHANNEL FUNCTIONAL TEST	92 days
TRS 3.11.2.6.5	Perform CHANNEL CALIBRATION	24 months

TABLE 3.11.2.6-1 (Page 1 of 3)
RADIOACTIVE GASEOUS EFFLUENT MONITORING INSTRUMENTATION

FUNCTION	APPLICABILITY	REQUIRED CHANNELS	SURVEILLANCE REQUIREMENTS
1. REACTOR BUILDING VENTILATION MONITORING SYSTEM			
a. Noble Gas Activity Monitor (Low Range)	At all Times	1	TRS 3.11.2.6.1 TRS 3.11.2.6.3 TRS 3.11.2.6.4 TRS 3.11.2.6.5
b. Deleted			
c. Deleted			
d Effluent System Flow Rate Monitor	At all Times	1	TRS 3.11.2.6.1 TRS 3.11.2.6.4 TRS 3.11.2.6.5
e. Sampler Flow Rate Monitor	At all Times	1	TRS 3.11.2.6.1 TRS 3.11.2.6.4 TRS 3.11.2.6.5

(continued)

TABLE 3.11.2.6-1 (Page 2 of 3)
RADIOACTIVE GASEOUS EFFLUENT MONITORING INSTRUMENTATION

FUNCTION	APPLICABILITY	REQUIRED CHANNELS	SURVEILLANCE REQUIREMENTS
2. TURBINE BUILDING VENTILATION MONITORING SYSTEM			
a. Noble Gas Activity Monitor (Low Range)	At all Times	1	TRS 3.11.2.6.1 TRS 3.11.2.6.3 TRS 3.11.2.6.4 TRS 3.11.2.6.5
b. Deleted			
c. Deleted			
d. Effluent System Flow Rate Monitor	At all Times	1	TRS 3.11.2.6.1 TRS 3.11.2.6.4 TRS 3.11.2.6.5
e. Sampler Flow Rate Monitor	At all Times	1	TRS 3.11.2.6.1 TRS 3.11.2.6.4 TRS 3.11.2.6.5

(continued)

TABLE 3.11.2.6-1 (Page 3 of 3)
RADIOACTIVE GASEOUS EFFLUENT MONITORING INSTRUMENTATION

FUNCTION	APPLICABILITY	REQUIRED CHANNELS	SURVEILLANCE REQUIREMENTS
3. STANDBY GAS TREATMENT SYSTEM (SGTS) MONITOR			
a. Noble Gas Activity Monitor (Low Range)	During operation of SGTS[a]	1	TRS 3.11.2.6.1 TRS 3.11.2.6.3 TRS 3.11.2.6.4 TRS 3.11.2.6.5
b. Deleted			
c. Deleted			
d. Effluent System Flow Rate Monitor	During operation of SGTS[a]	1	TRS 3.11.2.6.1 TRS 3.11.2.6.4 TRS 3.11.2.6.5
e. Sampler Flow Rate Monitor	During operation of SGTS[a]	1	TRS 3.11.2.6.1 TRS 3.11.2.6.4 TRS 3.11.2.6.5

(a) The provisions of TRO 3.0.4 are not applicable.

3.11 Radioactive Effluents

3.11.3 Total Dose

TRO 3.11.3 The annual (calendar year) dose or dose commitment to any MEMBER OF THE PUBLIC, due to releases of radioactivity and radiation, from uranium fuel cycle sources shall be limited to less than or equal to 25 mrem to the total body or any organ, except the thyroid, which shall be limited to less than or equal to 75 mrem.

APPLICABILITY: At all times

ACTIONS

CONDITION	REQUIRED ACTION	COMPLETION TIME
A. Calculated doses from the release of radioactive materials in liquid or gaseous effluents exceed twice the limits of Requirements 3.11.1.2.a, 3.11.1.2.b, 3.11.2.2.a, 3.11.2.2.b, 3.11.2.3.a, or 3.11.2.3.b	A.1 Initiate actions to calculate whether the TRO limits have been exceeded	Immediately
B. TRO limits exceeded	B.1 Prepare and submit a Special Report to the Commission	30 days

TECHNICAL REQUIREMENT SURVEILLANCE

SURVEILLANCE		FREQUENCY
TRS 3.11.3.1	Determine the cumulative dose from liquid and gaseous effluents in accordance with the methodology and parameters in the ODCM	31 days
TRS 3.11.3.2	Determine cumulative dose contributions from direct radiation from unit operation in accordance with the methodology and parameters in the ODCM	12 months

3.11 Radioactive Effluents

3.11.4 Radiological Environmental Monitoring

3.11.4.1 Monitoring Program

TRO 3.11.4.1 The radiological environmental monitoring program shall be conducted as specified in Table 3.11.4.1-1.

APPLICABILITY: At all times

ACTIONS

CONDITION	REQUIRED ACTION	COMPLETION TIME
A. Radiological environmental monitoring program not being conducted as specified in Table 3.11.4.1-1	A.1 Report and describe the events and any actions taken to prevent their recurrence in the Annual Radiological Environmental Operating Report	Annually
B. The average level of radioactivity over any calendar quarter as the result of an individual radionuclide in plant effluents in a particular environmental exposure pathway in a particular environmental sampling medium, at a specified location exceeds the applicable reporting level of Table 3.11.4.1-2	B.1 Prepare and submit a Special Report to the Commission	30 days

(continued)

ACTIONS (continued)

CONDITION	REQUIRED ACTION	COMPLETION TIME
C. More than one of the radionuclides in Table 3.11.4.1-2 are detected in a particular environmental exposure pathway at a specified monitoring location and are the result of plant effluents AND The sum of the ratios of the quarterly average activity levels to their corresponding reporting levels of each detected radionuclide, from Table 3.11.4.1-2, is ≥ 1.0	C.1 Prepare and submit a Special Report to the Commission	30 days

(continued)

ACTIONS (continued)

CONDITION	REQUIRED ACTION	COMPLETION TIME
D. One or more Radionuclide(s) other than those in Table 3.11.4.1-2 are detected in a particular environmental exposure pathway at a specified location and are the result of plant effluents AND The potential annual dose to a MEMBER OF THE PUBLIC from all detected radionuclides that are the result of plant effluents is greater than or equal to the calendar year limits of TROs 3.11.1.2, 3.11.2.2 and 3.11.2.3	D.1 Prepare and submit a Special Report to the Commission	30 days
E. The requirements for a Special Report per Conditions B, C, or D are met, but the radionuclides that are detected are not the result of plant effluents	E.1 Report and discuss the reasons for not attributing identified radionuclides to plant effluents in the Annual Radiological Environmental Operating Report	Annually

(continued)

ACTIONS (continued)

CONDITION	REQUIRED ACTION	COMPLETION TIME
F. Milk or fresh leafy vegetable samples are unavailable from one or more of the sample locations required by Table 3.11.4.1-1	----------NOTE---------- The specific locations from which samples were unavailable may then be deleted from the monitoring program. ----------	
	F.1 Identify locations for obtaining replacement samples and add them to the radiological environmental monitoring program	30 days
	AND	
	F.2 Identify the cause of the unavailability of samples and identify the new location(s) for obtaining replacement samples in the next Annual Radioactive Effluent Release Report	Annually

TECHNICAL REQUIREMENT SURVEILLANCE

SURVEILLANCE		FREQUENCY
TRS 3.11.4.1.1	Collect the radiological environmental monitoring samples pursuant to Table 3.11.4.1-1	As required by Table 3.11.4.1-1
TRS 3.11.4.1.2	Analyze samples pursuant to the requirements of Table 3.11.4.1-1 with equipment meeting the detection capabilities required by Table 3.11.4.1-3	As required by Table 3.11.4.1-1
TRS 3.11.4.1.3	Determine annual cumulative potential dose contributions from radionuclides detected in environmental samples in accordance with the methodology and parameters in the ODCM.	Annually

TABLE 3.11.4.1-1 (Page 1 of 3)
RADIOLOGICAL ENVIRONMENTAL MONITORING PROGRAM

EXPOSURE PATHWAY AND/OR SAMPLE	NUMBER OF REPRESENTATIVE SAMPLES AND SAMPLE LOCATIONS	SAMPLING AND COLLECTION FREQUENCY	TYPE AND FREQUENCY OF ANALYSIS
1. DIRECT RADIATION	40 routine monitoring stations with two or more dosimeters or with one instrument for measuring and recording dose rate continuously placed as follows: 1. An inner ring of stations, one in each meteorological sector, in the general area of the SITE BOUNDARY 2. An outer ring of stations, one in each meteorological sector, in the 3 to 9 mile range from the site 3. The balance of the stations placed in special interest areas such as population centers, nearby residences, schools, and in 1 or 2 areas to serve as control stations	Quarterly	Gamma dose quarterly
2. AIRBORNE			
Radioiodine and Particulates	Samples from 5 locations a. 1 sample from close to each of the 3 SITE BOUNDARY locations (in different sectors) with the highest calculated annual average groundlevel χ/Q b. 1 sample from the vicinity of the community having one of the highest calculated annual ground level χ/Q c. 1 sample from a control location, between 15 and 30 km distant and in the least prevalent wind direction of wind blowing from the plant	Continual sampler operation with sample collection weekly, or more frequently if required by dust loading	Radioiodine Canister: I-131 Analysis weekly Particulate Sampler: Gross Beta radio activity analysis following filter change[a]; Gamma isotopic analysis of composite (by location) quarterly

(continued)

[a] Airborne particulate sample filters shall be analyzed for gross beta radioactivity 24 hours or more after sampling to allow for radon and thorn daughter decay. If gross beta activity in air particulate samples is greater than ten times the yearly mean of control samples, gamma isotopic analysis shall be performed on the individual samples.

TABLE 3.11.4.1-1 (Page 2 of 3)
RADIOLOGICAL ENVIRONMENTAL MONITORING PROGRAM

EXPOSURE PATHWAY AND/OR SAMPLE	NUMBER OF REPRESENTATIVE SAMPLES AND SAMPLE LOCATIONS	SAMPLING AND COLLECTION FREQUENCY	TYPE AND FREQUENCY OF ANALYSIS
3. WATERBORNE			
a. Surface	1 sample upstream 1 sample downstream	Composite sample over one-month period	Gamma isotopic analysis monthly. Composite for tritium analyses quarterly
b. Ground	Samples from 1 or 2 sources only if likely to be affected	Quarterly	Gamma isotopic and tritium analyses quarterly
c. Drinking	1 sample from each of 1 to 3 of the nearest water supplies that could be affected by its discharge 1 sample from a control location	Composite sample over 2-week period when I-131 analysis is performed, monthly composite otherwise	I-131 analysis on each composite when the dose calculated for the consumption of the water is greater than 1 mrem per year. Composite for gross beta and gamma isotopic analyses monthly. Composite for tritium analyses quarterly
d. Sediment from shoreline	1 sample from downstream area with existing or potential recreational value	Semiannually	Gamma isotopic analyses semiannually

(continued)

TABLE 3.11.4.1-1 (Page 3 of 3)
RADIOLOGICAL ENVIRONMENTAL MONITORING PROGRAM

EXPOSURE PATHWAY AND/OR SAMPLE	NUMBER OF REPRESENTATIVE SAMPLES AND SAMPLE LOCATIONS	SAMPLING AND COLLECTION FREQUENCY	TYPE AND FREQUENCY OF ANALYSIS
4. INGESTION			
a. Milk	a. Samples from milking animals in 3 locations within 5km from the plant having the highest dose potential. If there are none, then, 1 sample from milking animals in each of 3 areas between 5 and 8km distant where doses are calculated to be greater than 1 mrem per year.	Semimonthly when animals are on pasture, monthly at other times.	Gamma isotopic and I-131 analysis semimonthly when animals are on pasture; monthly at other times.
	1 sample from milking animals at a control location (between 15 and 30km from the plant preferably in the least prevalent direction for wind blowing from the plant).		
b. Fish and/or Invertebrates	b. 1 sample of each of two recreationally important species in vicinity of plant discharge area.	Sample in season, or semiannually if they are not seasonal.	Gamma isotopic analysis on edible portions.
	1 sample of same species in areas not influenced by plant discharge.		
c. Food Products	c. 1 sample of each principal class of food products from any area which is irrigated by water in which liquid plant wastes have been discharged.	At time of harvest	Gamma isotopic analysis on edible portions.
	Samples of 3 different kinds of broad leaf vegetation grown nearest each of two different offsite locations of highest predicted annual average ground level D/Q if milk sampling is not performed.	Monthly when available	Gamma isotopic and I-131 analysis.
	1 sample of each of the similar broad leaf vegetation grown between 15 to 30km from the plant, preferably, in the least prevalent direction for wind blowing from the plant if milk sampling is not performed.	Monthly when available	Gamma isotopic and I-131 analysis.

TABLE 3.11.4.1-2
REPORTING LEVELS FOR RADIOACTIVITY CONCENTRATIONS IN ENVIRONMENTAL SAMPLES
Reporting Levels

Analysis	Water (pCi/l)	Airborne Particulate or Gases (pCi/m^3)	Fish (pCi/kg, wet)	Milk (pCi/l)	Food Products (pCi/kg, wet)
H-3	20,000[a]				
Mn-54	1,000		30,000		
Fe-59	400		10,000		
Co-58	1,000		30,000		
Co-60	300		10,000		
Zn-65	300		20,000		
Zr-Nb-95	400[b]				
I-131	2	0.9		3	100
Cs-134	30	10	1,000	60	1,000
Cs-137	50	20	2,000	70	2,000
Ba-La-140	200[b]			300	

[a] For drinking water samples. This is 40 CFR Part 141 value. If no drinking water pathway exists, a value of 30,000 pCi/l may be used.
[b] Total for parent and daughter.

TABLE 3.11.4.1-3
DETECTION CAPABILITIES FOR ENVIRONMENTAL SAMPLE ANALYSIS
LOWER LIMIT OF DETECTION (LLD)

Analysis	Water (pCi/l)	Airborne Particulate Or Gas (pCi/m³)	Fish (pCi/kg, wet)	Milk (pCi/l)	Food Products (pCi/kg, wet)	Sediments (pCi/kg, dry)
Gross Beta	4	0.01				
H-3	2000					
Mn-54	15		130			
Fe-59	30		260			
Co-58, 60	15		130			
Zn-65	30		260			
Zr-95	30					
Nb-95	15					
I-131	1[a]	0.07		1	60	
Cs-134	15	0.05	130	15	60	150
Cs-137	18	0.06	150	18	80	180
Ba-140	60			60		
La-140	15			15		

[a] LLD for drinking water samples.

3.11 Radioactive Effluents

3.11.4 Radiological Environmental Monitoring

3.11.4.2 Land Use Census

TRO 3.11.4.2 A land use census shall be conducted.

APPLICABILITY: At all times.

ACTIONS

CONDITION	REQUIRED ACTION	COMPLETION TIME
A. Land use census identifies a location(s) which yields a calculated dose or dose commitment greater than the values currently being calculated in Requirement 3.11.2.3	A.1 Identify the new location(s) in the next Annual Radioactive Effluent and Waste Disposal Report	As defined by the Annual Radioactive Effluent and Waste Disposal Report
B. Land use census identifies a location(s) that yields a calculated dose or dose commitment (via the same exposure pathway) 20 percent greater than at a location from which samples are currently being obtained in accordance with Requirement 3.11.4.1	B.1 Add the new location(s) to the radiological environmental monitoring program AND B.2 Identify the new location(s) in the next Annual Radioactive Effluent Release Report per TS Section 5.6	30 days As defined in Annual Radioactive Effluent Release Report

TECHNICAL REQUIREMENT SURVEILLANCE

SURVEILLANCE	FREQUENCY
TRS 3.11.4.2.1 Conduct the land use census	12 months

3.11 Radioactive Effluents

3.11.4 Radiological Environmental Monitoring

3.11.4.3 Interlaboratory Comparison Program

TRO 3.11.4.3 Analyses shall be performed on radioactive materials supplied as part of an Interlaboratory Comparison Program.

APPLICABILITY: At all times.

ACTIONS

CONDITION	REQUIRED ACTION	COMPLETION TIME
A. Analyses not being performed	A.1 Report the corrective actions taken to prevent a recurrence to the Commission	As required

TECHNICAL REQUIREMENT SURVEILLANCE

SURVEILLANCE	FREQUENCY
TRS 3.11.4.3.1 Include a summary of the results obtained as part of the above required Interlaboratory Comparison Program in the Annual Radiological Environmental Operating Report	Annually

B 3.11.1.1 Liquid Effluents Concentration

BASES

TRO

This requirement is provided to ensure that the concentration of radioactive materials released in liquid waste effluents to UNRESTRICTED AREAS will be less than 10 times the concentration levels specified in 10 CFR Part 20.1001 to 20.2402, Appendix B, Table 2, Column 2. The requirement provides operational flexibility for releasing liquid effluents in concentrations to follow the Section II.A and II.C design objectives of Appendix I to 10 CFR part 50. This limitation provides reasonable assurance that the levels of radioactive materials in bodies of water in UNRESTRICTED AREAS will result in exposures within (1) ~~the Section II.A design objectives of Appendix I, 10 CFR 50, to~~ a Member of the Public and (2) restrictions authorized by 10 CFR 20.1301(e). The concentration limit for dissolved or entrained noble gases is based upon the assumptions that Xe-135 is the controlling radionuclide and its effluent concentration in air (submersion) was converted to an equivalent concentration in water. This requirement does not affect the requirement to comply with the annual limitations of 10 CFR 20.1301(a). This requirement applies to the release of radioactive materials in liquid effluents from all units at the site. The required detection capabilities for radioactive materials in liquid waste samples are tabulated in terms of the lower limits of detection (LLDs). Detailed discussion of the LLD and the other detection limits can be found in Curie, L.A., "Lower Limit of Detection: Definition and Elaboration of a Proposed Position for Radiological Effluent and Environmental Measurements." (References 2, 3, and 4)

This section of the TRM is also part of the ODCM (Reference 2).

Actions

The Actions are defined to ensure proper corrective measures are taken in response to exceeding the TRO limits.

TRS

The TRSs are defined to be performed at the specified Frequency to ensure that the parameters are maintained within the TRO limits. Table 3.11.1.1-1 defines Radioactive Liquid Waste Sampling and Analysis Program. The lower limit of detection (LLD) is defined, for purposes of these Requirements, as the smallest concentration of radioactive material in a sample that

(continued)

B 3.11.1.1 Liquid Effluents Concentration

BASES (continued)

TRS (continued) will yield a net count, above system background, that will be detected with 95% probability with only 5% probability of falsely concluding that a blank observation represents a "real" signal. For a particular measurement system, which may include radiochemical separation:

$$LLD = \frac{4.66 s_b}{E \bullet V \bullet 2.22E6 \bullet Y \bullet \exp(-\lambda \Delta t)}$$

Where:

LLD is the *a priori* lower limit of detection as defined above (as microcuries per unit mass or volume).

s_b is the standard deviation of the background counting rate or of the counting rate of a blank sample as appropriate (as counts per minute),
E is the counting efficiency, as counts per disintegration,
V is the sample size, in units of mass or volume,
2.22 E6 is the number of disintegrations per minute per microcurie,
Y is the fractional radiochemical yield, when applicable.
λ is the radioactive decay constant for the particular radionuclide, and
Δt for plant effluents is the elapsed time between the midpoint of sample collection and time of counting.

Typical values of E, V, Y, and Δt should be used in the calculation.

It should be recognized that the LLD is defined as an *a priori* (before the fact) limit representing the capability of a measurement system and not as an *a posteriori* (after the fact) limit for a particular measurement.

A batch release is the discharge of liquid wastes of a discrete volume. Prior to sampling for analyses, each batch shall be isolated, and then thoroughly mixed to assure representative sampling.

(continued)

B 3.11.1.1 Liquid Effluents Concentration

BASES (continued)

TRS (continued) The principal gamma emitters for which the LLD specification applies include the following radionuclides: Mn-54, Fe-59, Co-58, Co-60, Zn-65, Mo-99, Cs-134, Cs-137, Ce-141 and Ce-144. The dissolved and entrained gases (gamma emitters) for which the LLD specification applies include the following radionuclides: Kr-85, Kr-85m, Kr-87, Kr-88, Ar-41, Xe-133, Xe-133m, Xe-135, and Xe-135m. This list does not mean that only these nuclides are to be considered. Other gamma peaks that are identifiable, together with those of the above nuclides, shall also be analyzed and reported in accordance with the ODCM.

A composite sample is one in which the quantity of liquid sampled is proportional to the quantity of liquid waste discharged and in which the method of sampling employed results in a specimen that is representative of the liquids released over a period no longer than the Minimum Analysis Frequency.

The Minimum Analysis Frequency as listed for the Composite Samples shall mean the minimum frequency for initiation of the required analyses, not completion of the analyses and evaluation of the results. Since the analysis involves sending the samples to an offsite laboratory and performance of involved sample preparation and wet chemical analyses, there will be a delay between initiation of the analysis and receipt of the results.

The analysis initiation shall normally be done on a calendar month for the 31 day frequency or calendar quarter for a 92 day frequency.

REFERENCES

1. Technical Specification 5.5.4 - Radioactive Effluent Controls program.
2. Technical Specification 5.5.1 - Offsite Dose Calculation Manual.
3. NUREG/CR-4007, September, 1984.
4. 10 CFR Part 20.

B 3.11.1.2 Liquid Effluents Dose

BASES

TRO

This requirement is provided to implement the requirements of Sections II.A, III.A and IV.A of Appendix I, 10 CFR Part 50. The Technical Requirement for Operation implements the guides set forth in Section II.A of Appendix I. Also, for fresh water sites with drinking water supplies which can be potentially affected by plant operations, there is reasonable assurance that the operation of the facility will not result in radionuclide concentrations in the finished drinking water that are in excess of the requirements of 40 CFR 141. The dose calculation methodology and parameters in the ODCM implement the requirements in Section III.A of Appendix I that conformance with the guides of Appendix I be shown by calculational procedures based on models and data, such that the actual exposure of a MEMBER OF THE PUBLIC through appropriate pathways is unlikely to be substantially underestimated. The equations specified in the ODCM for calculating the doses due to the actual release rates of radioactive materials in liquid effluents are consistent with the methodology provided in Regulatory Guide 1.109, "Calculation of Annual Doses to Man from Routine Releases of Reactor Effluents for the Purpose of Evaluating Compliance with 10 CFR Part 50, Appendix I," Revision 1, October 1977 and Regulatory Guide 1.113, "Estimating Aquatic Dispersion of Effluents from Accidental and Routine Reactor Releases for the Purpose of Implementing Appendix I," April 1977. (References 2, 3, 4, and 5)

This section of the TRM is also part of the ODCM (Reference 2).

Actions

The ACTION statements provide the required operating flexibility and at the same time implement the guides set forth in Section IV.A of Appendix I to assure that the releases of radioactive material in liquid effluents will be kept "as low as is reasonably achievable."

The Special Report to the Commission under Action A.1 shall

(continued)

B 3.11.1.2 Liquid Effluents Dose

BASES (continued)

ACTIONS (continued)	identify the cause(s) for exceeding the limit(s) and define the corrective actions that have been taken to reduce the releases and the proposed corrective actions to be taken to assure that subsequent releases will be in compliance with the specified limits. This Special Report shall also include the radiological impact on finished drinking water supplies at the nearest downstream drinking water source.
TRS	The TRSs are defined to be performed at the specified Frequency to ensure that the TRO limits are maintained.
REFERENCES	1. Tech Spec 5.5.4 - Radioactive Effluent Controls program 2. Tech Spec 5.5.1 - Offsite Dose Calculation Manual 3. 10 CFR Part 20 4. Regulatory Guide 1.109, "Calculation of Annual Doses to Man from Routine Releases of Reactor Effluents for the Purpose of Evaluating Compliance with 10 CFR Part 50, Appendix I," Revision 1, October 1977. 5. Regulatory Guide 1.113, "Estimating Aquatic Dispersion of Effluents from Accidental and Routine Reactor Releases for the Purpose of Implementing Appendix I," April 1977.

B 3.11.1.3 Liquid Waste Treatment System

BASES

TRO	The OPERABILITY of the liquid radwaste treatment system ensures that this system will be available for use whenever liquid effluents require treatment prior to release to the environment. The requirement that the appropriate portions of this system be used when specified provides assurance that the releases of radioactive materials in liquid effluents will be kept "as low as is reasonably achievable". This Requirement implements the requirements of 10 CFR Part 50.36a, General Design Criterion 60 of Appendix A to 10 CFR Part 50 and the design objective given in Section II.D of Appendix I to 10 CFR Part 50. The specified limits governing the use of appropriate portions of the liquid radwaste treatment system were specified as a suitable fraction of the dose design objectives set forth in Section II.A of Appendix I, 10 CFR part 50, for liquid effluents. (Reference 3) This section of the TRM is also part of the ODCM (Reference 2).
Actions	The Actions are defined to ensure proper corrective measures are taken in response to the inoperable components. The Special Report to the Commission under Action A.1 shall include the following: 1. Explanation of why liquid radwaste was being discharged without treatment, identification of any inoperable equipment or subsystems and the reason for the inoperability, 2. Action(s) taken to restore the inoperable equipment to OPERABLE status, and 3. Summary description of action(s) taken to prevent a recurrence.
TRS	The TRSs are defined to be performed at the specified Frequency to ensure that the system is maintained OPERABLE. OPERABILITY is demonstrated by operating the liquid radwaste treatment system equipment for at least 10 minutes.
REFERENCES	1. Technical Specification 5.5.4 - Radioactive Effluent Controls program. 2. Technical Specification 5.5.1 - ODCM. 3. 10 CFR Part 50.

B 3.11.1.4 Liquid Radwaste Effluent Monitoring Instrumentation

BASES

TRO The radioactive liquid effluent instrumentation are provided to monitor and control, as applicable, the releases of radioactive materials in liquid effluents during actual or potential releases of liquid effluents. The alarm/trip setpoints for these instruments shall be calculated in accordance with the procedures in the ODCM (Reference 2) to ensure that the alarm/trip will occur prior to exceeding the 10 times the concentration values specified in Appendix B, Table 2, Column 2 of 10CFR20.1001 - 10CFR20.2401 (Ref. 2). The OPERABILITY and use of this instrumentation is consistent with the requirements of General Design Criteria 60, 63, and 64 of Appendix A to 10 CFR Part 50. (Reference 4)

OPERABILITY of the radiation monitoring instrumentation requires their alarm/trip setpoints set to ensure that the limits of Requirement 3.11.1.1 are not exceeded. The alarm/trip setpoints of these channels shall be determined in accordance with the methodology and parameters described in the ODCM.

OPERABILITY of the Liquid Radwaste Effluent Line gross radioactivity monitor includes the proper functioning of the discharge valve interlocks (sample pump low flow, high radiation alarm, and radiation monitor failure).

OPERABILITY of the Cooling Tower Blowdown flow rate measurement device includes the proper functioning of the Liquid Radwaste Effluent Line discharge valve interlock (i.e. cooling tower blowdown low flow).

The Required Channels for each function in Table 3.11.1.4-1 are as follows:

(continued)

B 3.11.1.4 Liquid Radwaste Effluent Monitoring Instrumentation

BASES (continued)

TRO (continued)

a. Liquid Radwaste Effluent rad monitor (Function 1.a) one instrument per station.
b. Liquid Radwaste Effluent flow rate (Function 2.a) one instrument per station.
c. Cooling Tower Blowdown flow rate (Function 2.b) one instrument per station.

It should be noted that the radioactive liquid waste stream is diluted in the Cooling Tower blowdown line prior to entering the Susquehanna River. The setpoint for this dilution water flow is 5000 gpm from the combination of the Unit 1 blowdown, Unit 2 blowdown flow, and Spray Pond Discharge.

Options exist to ensure the requirement of one OPERABLE Cooling Tower Blowdown flow Instrument per station is met as required by Table 3.11.1.4-1, Function 2.b. As long as any one of three instruments (Unit 1 Tower, Unit 2 Tower, Total Site Blowdown) are OPERABLE and alignment of HS-06443A and HSS-01503 on panel 0C301 is such that the OPERABLE instrument(s) are in the circuit, then the TRM Requirement is met.

This section of the TRM is also part of the ODCM (Reference 2).

Actions

The Actions are defined to ensure proper corrective measures are taken in response to the inoperable components.

Pump curves generated in situ may be used to estimate flow for Action D.1.

TRS

The TRSs are defined to be performed at the specified Frequency to ensure that the monitoring instrumentation is maintained OPERABLE.

The TRSs shall be performed in accordance with the Technical Specification definition for the test with the following additional requirements:

The Liquid Radwaste Effluent Line radiation monitor CHANNEL FUNCTIONAL TEST shall also demonstrate that automatic isolation of this pathway and control room alarm annunciation occur if any

(continued)

B 3.11.1.4 Liquid Radwaste Effluent Monitoring Instrumentation

BASES (continued)

TRS (continued) of the following conditions exist:

1. Instrument indicates measured levels above the alarm/trip setpoint.
2. Circuit failure.
3. Instrument indicates a downscale failure.

The liquid Radwaste Effluent Line radiation monitor initial CHANNEL CALIBRATION shall be performed using one or more of the reference standards certified by the National Institute of Standards and Technology (NIST) or using standards that have been obtained from suppliers that participate in measurement assurance activities with NIST. These standards shall permit calibrating the system over its intended range of energy and measurement range. For subsequent CHANNEL CALIBRATION, sources that have been related to the initial calibration may be used in lieu of the reference standards associated with the initial calibration.

The Liquid Radwaste Effluent Line flow rate monitor and Cooling Tower Blowdown flow rate monitor CHANNEL CHECK shall consist of verifying indication of flow during periods of release. CHANNEL CHECK shall be made at least once per 24 hours on days on which continuous, periodic, or batch releases are made.

REFERENCES

1. Technical Specification 5.5.4 - Radioactive Effluent Controls program
2. Technical Specification 5.5.1 - Offsite Dose Calculation Manual
3. 10 CFR Part 20
4. 10 CFR Part 50

B 3.11.1.5 Radioactive Liquid Process Monitoring Instrumentation

BASES

TRO

The radioactive liquid process instrumentation is provided to monitor and control, as applicable, the releases of radioactive materials in liquid effluents during actual or potential releases of liquid effluents. The alarm/trip setpoints for these instruments shall be calculated in accordance with the procedures in the ODCM (Reference 2) to ensure that the alarm/trip will occur prior to exceeding 10 times the concentration values specified in Appendix B, Table 2, Column 2 of 10CFR20.1001 - 20.2401 (Reference 3). The OPERABILITY and use of this instrumentation is consistent with the requirements of General Design Criteria 60, 63, and 64 of Appendix A to 10 CFR Part 50. (Reference 4)

This section of the TRM is also part of the ODCM (Reference 2).

Actions

The Actions are defined to ensure proper corrective measures are taken in response to the inoperable components.

If an RHR heat exchanger and its applicable RHRSW loop are in service there is a pathway from the heat exchanger to the spray pond. If the heat exchanger and RHRSW loop are not in service (i.e., valved-out, RHRSW pump not running, or piping drained) then a pathway does not exist.

If there is no pathway, the requirement to perform grab sampling is not applicable when the RHR Service Water System Effluent Line Radiation Monitor has been declared inoperable.

The function of pumping down the RHR heat exchanger and RHRSW system piping to the Spray Pond provides a pathway for a release of potentially radioactively contaminated water. The RHRSW system is considered an 80-10 system because a pathway to the environment from this system exists through the Spray Pond and because the system, although normally not radioactively contaminated, has the potential for becoming radioactively contaminated in the event that a leak develops across an RHR heat exchanger. Therefore, grab samples must be collected periodically when the RHRSW system radiation monitor for a particular loop is inoperable (malfunctioning) and water from that loop of the system is being returned to the Spray Pond. Also, grab samples must be collected prior to operations in which water from the RHRSW system will be drained to the Spray Pond.

(continued)

BASES (continued)

TRS

The TRSs are defined to be performed at the specified Frequency to ensure that the monitoring instrumentation is maintained OPERABLE.

Performance of the CHANNEL CHECK ensures that a gross failure of the instrument has not occurred. A CHANNEL CHECK is normally a comparison of the parameter indicated on one channel against a similar parameter on other channels. It is based on the assumption that instrument channels monitoring the same parameter should read approximately the same value. Significant deviations between instrument channels could be an indication of excessive instrument drift in one of the channels or something even more serious. A CHANNEL CHECK will detect gross channel failure; thus, it is key to verifying the instrument continues to operate properly between each CHANNEL CALIBRATION.

Agreement criteria, which are developed by the plant staff based on an investigation of a combination of the channel instrument uncertainties, may be used to support this parameter comparison and include indication and readability. If a channel is outside the criteria, it may be an indication that the instrument has drifted outside its limit and does not necessarily indicate the channel is inoperable.

The TRSs shall be performed in accordance with the Technical Specification definition for the test with the following additional requirements:

The CHANNEL FUNCTIONAL TEST shall also demonstrate that control room alarm annunciation occurs if any of the following conditions exists:

1. Instrument indicates measured levels above the alarm setpoint.
2. Circuit failure.
3. Instrument indicates a downscale failure, and
4. Instrument controls not set in operate mode.

(continued)

BASES (continued)

TRS (continued) The initial CHANNEL CALIBRATION shall be performed using one or more of the reference standards certified by the National Institute of Standards and Technology (NIST) or using standards that have been obtained from suppliers that participate in measurement assurance activities with NIST. These standards shall permit calibrating the system over its intended range of energy and measurement range. For subsequent CHANNEL CALIBRATION, sources that have been related to the initial calibration may be used in lieu of the reference standards associated with the initial calibration.

REFERENCES

1. ~~Technical Specification 5.5.4 - Radioactive Effluent~~ Controls program
2. Technical Specification 5.5.1 - Offsite Dose Calculation Manual
3. 10 CFR Part 20
4. 10 CFR Part 50

B 3.11.2.1 Dose Rate

BASES

TRO

This requirement provides reasonable assurance that radioactive material discharged in gaseous effluents will not result in the exposure of a Member of the Public either within or outside the Site Boundary, in excess of the design objectives of Appendix I to 10CFR50. It provides operational flexibility for releasing gaseous effluents while satisfying section II.B and II.C design objectives of Appendix I. For individuals who may at times be within the Site Boundary, the occupancy of the individual will usually be sufficiently low to compensate for any increase in atmospheric diffusion factor above that for the Site Boundary. The specified release rate limits restrict, at all times, the corresponding dose rates above background to a Member of the Public at or beyond the Site Boundary to less than or equal to 500 mrem/yr to the total body or to less than or equal to 3000 mrem/yr to the skin. These release rate limits also restrict, at all times, the corresponding thyroid dose rate above background to an individual via the inhalation pathway to less than or equal to 1500 mrem/yr. These limits provide reasonable assurance that radioactive material discharged in gaseous effluents will not result in the exposure of a MEMBER OF THE PUBLIC either within or outside the SITE BOUNDARY, to annual average concentrations exceeding the limits specified in Appendix B, Table II of 10 CFR Part 20. (Reference 3)

This Requirement applies to the release of gaseous effluents from all reactors at the site.

This section of the TRM is also part of the ODCM (Reference 2).

(continued)

B 3.11.2.1 Dose Rate

BASES (continued)

Actions

The Actions are defined to ensure proper corrective measures are taken in response to the limits being exceeded.

TRS

The TRSs are defined to be performed at the specified Frequency to ensure that the dose rates are maintained within limits. Dose rates are determined in accordance with the methodology and parameters of the ODCM.

Table 3.11.2.1-1 defines Radioactive Gaseous Waste Sampling and Analysis Program. The lower limit of detection (LLD) is defined, for purposes of these requirement, as the smallest concentration of radioactive material in a sample that will yield a net count, above system background, that will be detected with 95% probability with only 5% probability of falsely concluding that a blank observation represents a "real" signal. For a particular measurement system, which may include radiochemical separation:

$$LLD = \frac{4.66 s_b}{E \bullet V \bullet 2.22E6 \bullet Y \bullet \exp(-\lambda \Delta t)}$$

Where:

LLD is the *a priori* lower limit of detection as defined above (as microcuries per unit mass or volume),
s_b is the standard deviation of the background counting rate or of the counting rate of a blank sample as appropriate (as counts per minute),
E is the counting efficiency, as counts per disintegration,
V is the sample size, in units of mass or volume,
2.22 E6 is the number of disintegrations per minute per microcurie,
Y is the fractional radiochemical yield, when applicable,
λ is the radioactive decay constant for the particular radionuclide, and
Δt for plant effluents is the elapsed time between the midpoint of sample collection and time of counting (for plant effluents, not environmental samples).

(continued)

B 3.11.2.1 Dose Rate

BASES (continued)

TRS (continued) The value of s_b used in the calculation of the LLD for a detection system shall be based on the actual observed variance of the background counting rate or of the counting rate of the blank samples (as appropriate) rather than on an unverified theoretically predicted variance. Typical values of E, V, Y, and Δt shall be used in the calculation.

The principal gamma emitters for which the LLD specification applies include the following radionuclides: Kr-87, Kr-88, Xe-133, Xe-133m, Xe-135, Xe-135m and Xe-138 for gaseous emissions ~~and Mn-54, Fe-59, Co-58, Co-60, Zn-65, Mo-99, Cs-134, Cs-137,~~ Ce-141 and Ce-144 for particulate emissions. This list does not mean that only these nuclides are to be considered. Other gamma peaks which are identifiable, together with those of the above nuclides, shall also be analyzed and reported in the Annual Radioactive Effluent Release Report.

The design of the systems for the sampling of particulates and iodines provide for sample nozzle entry velocities which are approximately isokinetic with instack air velocities. Gaseous particulate and iodine samples are gathered continuously, with the sample size proportional to the stack emissions; a composite gaseous sample is a combination of all the particulate filters gathered in a sampling period.

Particulate or iodine sampling required to be in continuous service will be considered to remain and have been in continuous service when its service is interrupted for a time period not to exceed 1 hour per sampling period. For particulate and iodine sampling, this is a small fraction of the normal minimum analysis frequency.

The minimum Analysis Frequency as listed for the Composite Samples shall mean the minimum frequency for initiation of the required analyses, not completion of the analysis and evaluation of the results. Since the analysis involves sending the samples to an offsite laboratory and performance of involved sample preparation and wet chemical analyses, there will be a delay between initiation of the analysis and receipt of the results. The analysis initiation shall normally be done on a calendar quarter for a 92 day frequency.

(continued)

B 3.11.2.1 Dose Rate

BASES (continued)

REFERENCES

1. Technical Specification 5.5.4 - Radioactive Effluent Controls Program
2. Technical Specification 5.5.1 - Offsite Dose Calculation Manual
3. 10CFR Part 20

B 3.11.2.2 Dose - Noble Gases

BASES

TRO	This requirement is provided to implement the requirements of Sections II.B, III.A and IV.A of Appendix I, 10 CFR Part 50. (Reference 5) The Technical Requirement for Operation implements the guides set forth in Section II.B of Appendix I. This section of the TRM is also part of the ODCM (Reference 2).
Actions	The ACTION statements provide the required operating flexibility and at the same time implement the guides set forth in Section IV.A of Appendix I to assure that the releases of radioactive material in gaseous effluents will be kept "as low as is reasonably achievable". The Special Report required under Action A.1 shall identify the cause(s) for exceeding the limit(s) and define the corrective actions that have been taken to reduce the releases and the proposed corrective actions to be taken to assure that subsequent releases will be in compliance with the above limits.
TRS	The TRSs implement the requirements in Section III.A of Appendix I that conformance with the guides of Appendix I be shown by calculational procedures based on models and data such that the actual exposure of a MEMBER OF THE PUBLIC through appropriate pathways is unlikely to be substantially underestimated. The dose calculation established in the ODCM for calculating the doses due to the actual release rates of radioactive noble gases in gaseous effluents are consistent with the methodology provided in Regulatory Guide 1.109, "Calculation of Annual Doses to Man from Routine Releases of Reactor Effluents for the Purpose of Evaluating Compliance with 10 CFR Part 50, Appendix I, " Revision 1, October 1977 and Regulatory Guide 1.111, "Methods for estimating Atmospheric Transport and Dispersion of Gaseous Effluents in Routine Releases from Light-Water Cooled Reactors," Revision 1, July 1977. The ODCM equations provided for determining the air doses at and beyond the SITE BOUNDARY are based upon the historical average atmospheric conditions. (References 2, 3 and 4)

(continued)

B 3.11.2.2 Dose - Noble Gases

BASES (continued)

REFERENCES

1. Technical Specification 5.5.4 - Radioactive Effluent Controls program
2. Technical Specification Spec 5.5.1 - Offsite Dose Calculation Manual
3. Regulatory Guide 1.109, "Calculation of Annual Doses to Man from Routine Releases of Reactor Effluents for the Purpose of Evaluating Compliance with 10 CFR Part 50, Appendix I", Revision 1, October 1977.
4. Regulatory Guide 1.111, "Methods for estimating Atmospheric Transport and Dispersion of Gaseous Effluents in Routine Releases from Light-Water Cooled Reactors," Revision 1, July 1977.
5. 10 CFR Part 50.

B 3.11.2.3 Dose - Iodine, Tritium, and Radionuclides in Particulates Form

BASES

TRO	This requirement is provided to implement the requirements of Sections II.C, III.A and IV.A of Appendix I, 10 CFR Part 50. The Limiting Conditions for Operation are the guides set forth in Section II.C of Appendix I. (Reference 5) This section of the TRM is also part of the ODCM (Reference 2).
Actions	The ACTION statements provide the required operating flexibility and at the same time implement the guides set forth in Section IV.A of Appendix I to assure that the releases of radioactive materials in gaseous effluents will be kept" as low as is reasonably achievable." The Special Report required under Action A.1 shall identify the cause(s) for exceeding the limit(s) and define the corrective actions that have been taken to reduce the releases and the proposed corrective actions to be taken to assure that subsequent releases will be in compliance with the above limits.
TRS	The TRSs are defined to be performed at the specified Frequency to ensure that the TRO limits are maintained. The ODCM calculational methods specified in the TRSs implement the requirements in Section III.A of Appendix I that conformance with the guides of Appendix I be shown by calculational procedures based on models and data, such that the actual exposure of a MEMBER OF THE PUBLIC through appropriate pathways is unlikely to be substantially underestimated. The ODCM calculational methods for calculating the doses due to the actual release rates of the subject materials are consistent with the methodology provided in Regulatory Guide 1.109, "Calculation of Annual Doses to Man from Routine Releases of Reactor Effluents for the Purpose of Evaluating Compliance with 10 CFR Part 50, Appendix I," Revision 1, October 1977 and Regulatory Guide 1.111, "Methods for Estimating Atmospheric Transport and Dispersion of Gaseous Effluents in Routine Releases from Light-Water-Cooled Reactors," Revision 1, July 1977. These equations also provide for determining the actual

(continued)

B 3.11.2.3 Dose - Iodine, Tritium, and Radionuclides in Particulates Form

BASES (continued)

TRS (continued) doses based upon the historical average atmospheric conditions. The release rate Requirements for iodine-131, iodine-133, tritium, and radionuclides in particulate form with half lives greater than 8 days are dependent on the existing radionuclide pathways to man in areas at and beyond the SITE BOUNDARY. The pathways which were examined in the development of these calculations were: 1) individual inhalation of airborne radionuclides, 2) deposition of radionuclides onto green leafy vegetation with subsequent consumption by man, 3) deposition onto grassy areas where milk animals and meat producing animals graze with consumption of the milk and meat by man, and 4) deposition on the ground with subsequent exposure of man. (References 2, 3 and 4)

REFERENCES

1. Technical Specification 5.5.4 - Radioactive Effluent Controls program.
2. Technical Specification 5.5.1 - Offsite Dose Calculation Manual.
3. Regulatory Guide 1.109. "Calculation of Annual Doses to Man from Routine Releases of Reactor Effluents for the Purpose of Evaluating Compliance with 10 CFR Part 50, Appendix I," Revision 1, October 1977.
4. Regulatory Guide 1.111, "Methods for Estimating Atmospheric Transport and Dispersion of Gaseous Effluents in Routine Releases from Light-Water-Cooled Reactors," Revision 1, July 1977.
5. 10 CFR Part 50

B 3.11.2.4 GASEOUS RADWASTE TREATMENT SYSTEM

BASES

TRO

This TRO ensures that the GASEOUS RADWASTE TREATMENT SYSTEM is OPERABLE and in operation to reduce radioactive materials in gaseous waste prior to discharge when the main condenser air ejector (evacuation) system is in operation. This requirement provides reasonable assurance that the releases of radioactive materials in gaseous effluents will be kept "as low as is reasonably achievable". This TRO implements the requirements of 10 CFR Part 50.36a, General Design Criterion 60 of Appendix A to 10 CFR Part 50, and the design objectives given in Section II.D of Appendix I to 10 CFR Part 50. The limits governing the use of the system were specified as a suitable fraction of the dose design objectives set forth in Sections II.B and II.C of Appendix I, 10 CFR Part 50, for gaseous effluents (Ref. 1).

This section of the TRM is part of the Offsite Dose Calculation Manual (Ref. 2) and implements the requirements of the Radiological Effluent Controls Program (Ref. 3).

ACTIONS

The ACTIONS are defined to ensure proper corrective measures are taken in response to the inoperable components.

A.1

With the GASEOUS RADWASTE TREATMENT SYSTEM inoperable, action must be taken to restore it to OPERABLE status in order to maintain radioactive releases from the main condenser as low as reasonably achievable, and in compliance with regulatory requirements. The 7 day Completion Time is reasonable to perform repairs and to maintain radioactive release objectives.

B.1

If the Required Action and Completion Time of Condition A are not met, a Special Report must be prepared and submitted to the Commission. The 30 day Completion Time is reasonable for preparation of the report. The Special Report should include the following information:

1. Identification of the inoperable equipment or subsystems and the reason for inoperability,
2. Action(s) taken to restore the inoperable equipment to OPERABLE status, and
3. Summary description of action(s) taken to prevent a recurrence.

(continued)

B 3.11.2.4 GASEOUS RADWASTE TREATMENT SYSTEM

BASES -

TRS

The TRSs are performed at the specified Frequency to ensure that the GASEOUS RADWASTE TREATMENT SYSTEM is maintained OPERABLE.

TRS 3.11.2.4.1

This surveillance requires verification that the GASEOUS RADWASTE TREATMENT SYSTEM is in operation when the main condenser air ejector (evacuation) system is in operation. The Frequency of 92 days is appropriate considering the performance of monthly dose projections.

REFERENCES

1. 10 CFR Part 50
2. Technical Specification 5.5.1 - Offsite Dose Calculation Manual
3. Technical Specification 5.5.4 - Radioactive Effluent Controls program.

B 3.11.2.5 VENTILATION EXHAUST TREATMENT SYSTEM

BASES

TRO

This TRO ensures that the appropriate portions of the VENTILATION EXHAUST TREATMENT SYSTEM, as described in the Offsite Dose Calculation Manual (ODCM) are OPERABLE at all times. The TRO is modified by a Note which requires that the appropriate portions of the VENTILATION EXHAUST TREATMENT SYSTEM be used to reduce radioactive materials in gaseous waste prior to their discharge when projected doses due to gaseous effluent releases from either reactor unit to areas at and beyond the SITE BOUNDARY would exceed 0.3 mrem to any organ in a 31 day period. This requirement provides reasonable assurance that the releases of radioactive materials in gaseous effluents will be kept "as low as reasonably achievable." This TRO implements the requirements of 10 CFR Part 50.36a, General Design Criterion 60 of Appendix A to 10 CFR Part 50, and the design objectives given in Section II.D of Appendix I to 10 CFR Part 50. The limits governing the use of appropriate portions of the systems were specified as a suitable fraction of the dose design objectives set forth in Sections II.B and II.C of Appendix I, 10 CFR Part 50, for gaseous effluents (Ref. 1).

The VENTILATION EXHAUST TREATMENT SYSTEM is comprising of the following systems, as described in the ODCM:

The Unit 1 Reactor Building filtered exhaust system, including the following filters:

1F216A, 1F216B, 1F217A, 1F217B, 1F218A, 1F218B, 1F255A, 1F255B, 1F257A, 1F257B, 1F258A AND 1F258B.

The Unit 2 Reactor Building filtered exhaust system, including the following filters:

2F216A, 2F216B, 2F217A, 2F217B, 2F218A, 2F218B, 2F255A, 2F255B, 2F257A, 2F257B, 2F258A AND 2F258B.

The Unit 1 Turbine Building filtered exhaust system, including the following filters:

1F157A, 1F157B, 1F158A, and 1F158B.

The Unit 2 Turbine Building filtered exhaust system, including the following filters:

2F157A, 2F157B, 2F158A, and 2F158B.

(continued)

B 3.11.2.5 VENTILATION EXHAUST TREATMENT SYSTEM

BASES

TRO (continued)

The Radwaste Building filtered exhaust system, including the following filters:

0F355A and 0F355B.

The Radwaste Tank Vent exhaust system, including the following filters:

0F358 and 0F359.

The S&A Hot Shop exhaust system, including the following filters:

0F716.

The Control Structure Filter Unit exhaust system, including the following filters:

0F134, 0F135, 0F137, 0F138, 0F140, 0F141, 0F143, and 0F144.

This section of the TRM is part of the ODCM (Ref. 2) and implements the requirements of the Radiological Effluent Controls Program (Ref. 3).

ACTIONS

The ACTIONS are defined to ensure proper corrective measures are taken in response to the inoperable components. Dose evaluations are performed when evolutions occur which result in an effluent path to the environment with some level of degraded treatment. In effect, degraded treatment renders the monthly dose projection per TRS 3.11.2.5.1 questionable. The dose evaluation is an estimated projection under the degraded conditions.

Dose evaluations should be performed under the following conditions:

1. When bypassing a treatment system (a preliminary evaluation prior to bypassing the filter and a follow-up evaluation after the bypass);

(continued)

B 3.11.2.5 VENTILATION EXHAUST TREATMENT SYSTEM

BASES

ACTIONS (continued)

2. When placing an inoperable filter train in service (a preliminary evaluation prior to starting the system and a follow-up evaluation after the system is in service);

3. If a surveillance on a treatment system fails while the filter is in service; and

4. Any other event which results in degraded treatment.

The appropriate portion of the VENTILATION EXHAUST TREATMENT SYSTEM will be declared inoperable if any of the following conditions exist:

1. Failure of a surveillance test;

2. Broken or non-functional component which prevents the system from being run (e.g. both 100% fans or one 50% fan in the system); or

3. Bypass or degradation of system filtration in which effluent flow continues without full treatment.

A.1

With any portion of the VENTILATION EXHAUST TREATMENT SYSTEM inoperable, action must be taken to restore it to OPERABLE status. The 31 day Completion Time is a reasonable time frame to repair the inoperable components.

B.1

If the Required Action and Completion Time of Condition A are not met, or gaseous waste is being discharged without treatment and in excess of the TRO limits, a Special Report must be prepared and submitted to the Commission. The 30 day Completion Time is reasonable for preparation of the report. The Special Report should include the following information:

1. Identification of the inoperable equipment or subsystems and the reason for inoperability;

2. Action(s) taken to restore the inoperable equipment to OPERABLE status; and

3. Summary description of action(s) taken to prevent a recurrence.

(continued)

B 3.11.2.5 VENTILATION EXHAUST TREATMENT SYSTEM

BASES -

TRS

The TRSs are performed at the specified Frequency to ensure that the VENTILATION EXHAUST TREATMENT SYSTEM is maintained OPERABLE.

TRS 3.11.2.5.1

This surveillance requires that a dose projection be performed in accordance with the methodology and parameters in the ODCM. The dose projection is performed based on the most recently available effluent data. If it is known prior to performing the dose projection that a treatment system will be out of service, and if data exists which indicates how the lack of treatment will impact effluents, these factors will be considered when performing the dose projection. The 31 day Frequency is consistent with Reference 3.

TRS 3.11.2.5.2

This surveillance verifies that the VENTILATION EXHAUST TREATMENT SYSTEM is OPERABLE by operating the system ≥ 10 minutes. Operation of the system for at least 10 minutes provides sufficient time to verify the appropriate parameters are within their normal operating range. The Frequency of 92 days is appropriate considering the performance of monthly dose projections.

This TRS is modified by a Note which states that the TRS is not required to be performed if the appropriate system has been utilized to process radioactive gaseous effluents during the previous 92 days. This allowance is appropriate because actual processing of radioactive gaseous effluents demonstrates system OPERABILITY.

REFERENCES

1. 10CFR Part 50.
2. Technical Specification 5.5.1 - Offsite Dose Calculation Manual.
3. Technical Specification 5.5.4 - Radioactive Effluent Controls program.

B 3.11.2.6 Radioactive Gaseous Effluent Monitoring Instrumentation

BASES

TRO

The radioactive gaseous effluent instrumentation is provided to monitor and control, as applicable, the releases of radioactive materials in gaseous effluents during actual or potential releases of gaseous effluents. The alarm/trip setpoints for these instruments shall be calculated in accordance with the procedures in the ODCM (Reference 2) to ensure that the alarm/trip will occur prior to exceeding the release rate limits corresponding to dose rates above background to a member of the public at or beyond the site boundary to ≤ 500 mrem/yr to the total body or to ≤ 3000 mrem/yr to the skin. The OPERABILITY and use of this instrumentation is consistent with the requirements of General Design Criteria 60, 63, and 64 of Appendix A to 10 CFR Part 50. (References 3 and 4)

OPERABILITY requires their alarm/trip setpoints set to ensure that the limits of Requirement 3.11.2.1 are not exceeded. The alarm/trip setpoints of these channels shall be determined in accordance with the methodology and parameters in the ODCM.

This section of the TRM is also part of the ODCM (Reference 2).

ACTIONS

The Actions are defined to ensure proper corrective measures are taken in response to the inoperable components.

Low range Noble Gas channel readings from the local vent monitor may be used to meet the requirement for a Noble Gas grab sample and grab sample analysis.

Noble Gas release grab samples are not required to be taken when there are no releases via that pathway. Effluent flow is to be determined by vent flow instrumentation or by a vent flow estimate every 4 hours. Continuous sample collection shall be on the same basis as described in the Bases for TRO 3.11.2.1

Monitoring may be interrupted for up to 30 minutes to perform particulate filter/iodine cartridge changeout required by TRM Table 3.11.2-1 without entering the TRO ACTIONS.

(continued)

B 3.11.2.6 Radioactive Gaseous Effluent Monitoring Instrumentation

BASES (continued)

TRS

The TRSs are defined to be performed at the specified Frequency to ensure that the monitoring instrumentation is maintained OPERABLE.

The TRSs shall be performed in accordance with the Technical Specification definition for the test with the following additional requirements:

The CHANNEL FUNCTIONAL TEST for all noble gas activity monitors shall also demonstrate that control room alarm annunciation occurs if any of the following conditions exists:

1. Instrument indicates measured levels above the alarm/trip setpoint,
2. Circuit failure, and
3. Instrument indicates a downscale failure.

The initial CHANNEL CALIBRATION for all noble gas activity monitors shall be performed using one or more of the reference standards certified by the National Institute of Standards and Technology (NIST) or using standards that have been obtained from suppliers that participate in measurement assurance activities with NIST. These standards shall permit calibrating the system over its intended range of energy and measurement range. For subsequent CHANNEL CALIBRATION, sources that have been related to the initial calibration may be used in lieu of reference standards associated with the initial calibration.

Particulate or iodine sampling required to be in continuous service will be considered to remain and have been in continuous service when its service is interrupted for a period of time not to exceed 1 hour per sampling period. For particulate and iodine sampling, this is a small fraction of the normal minimum analysis frequency.

REFERENCES

1. Technical Specification 5.5.4 - Radioactive Effluent Controls program.
2. Technical Specification 5.5.1 - Offsite Dose Calculation Manual.
3. 10 CFR Part 20.
4. 10 CFR Part 50.

B 3.11.3 Total Dose

BASES

TRO

This Requirement is provided to meet the dose limitations of 40 CFR 190 that have been incorporated into 10 CFR 20 by 46 CFR 18525. The Requirement requires the preparation and submittal of a Special Report whenever the calculated doses from plant radioactive effluents exceed twice the design objective doses of Appendix I. For sites containing up to 4 reactors, it is highly unlikely that the resultant dose to a MEMBER OF THE PUBLIC will exceed the dose limits of 40 CFR 190 if the individual reactors remain within the reporting requirement level. The Special Report will describe a course of action that should result in the limitation of the annual dose to a MEMBER OF THE PUBLIC to within the 40 CFR 190 limits. For the purposes of the Special Report, it may be assumed that the dose commitment to the MEMBER OF THE PUBLIC from other uranium fuel cycle sources is negligible, with the exception that dose contributions from other nuclear fuel cycle facilities at the same site or within a radius of 5 miles must be considered. If the dose to any MEMBER OF THE PUBLIC is estimated to exceed the requirements of 40 CFR 190, the Special Report with a request for a variance (provided the release conditions resulting in violation of 40 CFR 190 have not already been corrected), in accordance with the provisions of 40 CFR 190.11 is considered to be a timely request and fulfills the requirements of 40 CFR 190 until NRC staff action is completed. An individual is not considered a MEMBER OF THE PUBLIC during any period in which he/she is engaged in carrying out any operation that is part of the nuclear fuel cycle. Reference 3

Actions

The Actions are defined to ensure proper corrective measures are taken when requirements are not met.

Calculations required by Action B.1 shall include direct radiation contributions from both reactor units and from outside storage tanks to determine whether the limits of this TRO have been exceeded.

(continued)

B 3.11.3 Total Dose

BASES (continued)

ACTIONS (continued)

The Special Report to be issued per Action B.1 shall define the corrective action to be taken to reduce subsequent releases, to prevent recurrence of exceeding the above limits, and include the schedule for achieving conformance with the above limits. This Special Report shall include an analysis that estimates the radiation exposure (dose) to a MEMBER OF THE PUBLIC from uranium fuel cycle sources, including all effluent pathways and direct radiation, for the calendar year that includes the release(s) covered by this report. It shall also describe levels of radiation and concentrations of radioactive material involved, and the cause of the exposure levels or concentrations. If the estimated dose(s) exceeds the above limits, and if the release condition resulting in violation of 40 CFR Part 190 has not already been corrected, the Special Report shall include a request for a variance in accordance with the provisions of 40 CFR Part 190. Submittal of the report is considered a timely request, and a variance is granted until staff action on the request is complete.

TRS

The TRSs are defined to be performed at the specified Frequency to ensure that requirements are implemented.

TRS 3.11.3.1 cumulative dose contributions from liquid and gaseous effluents shall be determined in accordance with TROs 3.11.1.2, 3.11.2.2, and 3.11.2.3. The direct radiation dose is determined from the results of radiation monitoring with TLDs that is conducted by the SSES REMP. The REMP TLDs are processed quarterly. There is no requirement to show compliance with the 40CFR190 dose limits more frequently than an annual basis. Demonstration of compliance with this dose limit considers the combined dose contributions from liquid and gaseous effluents and direct radiation.

REFERENCES

1. Technical Specification 5.5.4 - Radioactive Effluent Controls program
2. Technical Specification 5.5.1 - Offsite Dose Calculation Manual
3. 40 CFR 190

B 3.11.4.1 Monitoring Program

BASES

TRO

The radiological environmental monitoring program required by this Requirement provides representative measurements of radiation and of radioactive materials in those environmental exposure pathways and for those radionuclides that lead to the highest potential radiation exposures of MEMBERS OF THE PUBLIC resulting from the station operation. This monitoring program thereby supplements the radiological effluent monitoring program by verifying that the measurable concentrations of radioactive materials and levels of radiation are not higher than expected on the basis of the effluent measurements and modeling of the environmental exposure pathways. Changes to the radiological environmental monitoring program specified in Table 3.11.4.1-1 may be made based on expected SSES operation and the results of radiological environmental monitoring during SSES operation.

The required detection capabilities for environmental sample analyses are tabulated in terms of the lower limits of detection (LLDs). The LLDs required by Table 3.11.4.1-3 are considered optimum for routine environmental measurements in industrial laboratories. It should be recognized that the LLD is defined as an *a priori* (before the fact) limit representing the capability of a measurement system and not as an *a posteriori* (after the fact) limit for a particular measurement.

Detailed discussion of the LLD, and other detection limits, can be found in HASL Procedures Manual, HASL-300 (revised annually); Currie, L. A., "Limits for Qualitative Detection and Quantitative Determination - Application to Radiochemistry" Anal. Chem. 40, 586-93 (1968); and Hartwell, J. K., "Detection Limits for Radioanalytical Counting Techniques," Atlantic Richfield Hanford Company Report ARH-SA-215 (June 1975). (Reference 1)

This section of the TRM is also part of the ODCM (Reference 2).

Actions

The Actions are defined to ensure proper corrective measures are taken when requirements are not met.

(continued)

B 3.11.4.1 Monitoring Program

BASES (continued)

ACTIONS (continued)

Per Action A.1, the Annual Radiological Environmental Operating Report shall provide a description of the reasons for not conducting the program as required and the plans for preventing a recurrence.

The Special Report submitted per Action B.1 shall identify the cause(s) for exceeding the limit(s) and define the corrective actions to be taken to reduce radioactive effluents so that the potential annual dose to a MEMBER OF THE PUBLIC is less than the calendar year limits of Requirements 3.11.1.2, 3.11.2.2 and 3.11.2.3.

Include revised figure(s) and table for the ODCM reflecting the new locations for obtaining samples per Action F.1 in the next Annual Radioactive Effluent Release Report.

TRS

The TRSs are defined to be performed at the specified frequency to ensure that the requirements are implemented. Monitoring samples collected per TRS 3.11.4.1.1 shall be from the specific locations given in the table and figure in the ODCM. (Reference 2)

Table 3.11.4.1-1

Sample Locations Specific parameters of distance and direction sector from the centerline of one reactor, and additional description where pertinent, shall be provided for each and every sample location in this Table and in a table and figure(s) in the ODCM. Refer to NUREG-0133, "Preparation of Radiological Effluent Technical Specifications for Nuclear Power Plants," October 1978, and to Radiological Assessment Branch Technical Position, Revision 1, November 1979. (Reference 3) Deviations are permitted from the required sampling schedule if specimens are unobtainable due to hazardous conditions, seasonal unavailability, malfunction of automatic sampling equipment and other legitimate reasons. If specimens are unobtainable due to sampling equipment malfunction, every effort shall be made to complete corrective action prior to the end of the next sampling

(continued)

B 3.11.4.1 Monitoring Program

BASES (continued)

TRS (continued) period. All deviations from the sampling schedule shall be documented in the Annual Radiological Environmental Operating Report. It is recognized that, at times, it may not be possible or practicable to continue to obtain samples of the media of choice at the most desired location or time.

In these instances suitable alternative media and locations may be chosen for the particular pathway in question and appropriate substitutions made within 30 days in the radiological environmental monitoring program. Identify the cause of the unavailability of samples for that pathway and identify the new location(s) for obtaining replacement samples in the next Annual Radioactive Effluent Release Report and also include in the report a revised figure(s) and table for the ODCM reflecting the new location(s).

Direct Radiation One or more instruments, such as a pressurized ion chamber, for measuring and recording dose rate continuously may be used in place of, or in addition to, integrating dosimeters. For the purposes of this table, a thermoluminescent dosimeter (TLD) is considered to be one phosphor; two or more phosphors in a packet are considered as two or more dosimeters. Film badges shall not be used as dosimeters for measuring direct radiation.

Radioiodine and Particulates - Sampling and Collection Frequency

The charcoal cartridges used in the airborne radioiodine sampling conducted as part of the radiological environmental monitoring program are designed and tested by the manufacturer to assure a high efficiency in the capture of radioiodine. Certificates from the manufacturer of the cartridges are provided with each batch of cartridges certifying the percent retention of the radiodine for stated air flows.

Radioiodine and Particulates - Particulate Sample; Waterborne - Surface, Ground, Sediment; Food Products Gamma isotopic analysis means the identification and quantification of gamma- emitting radionuclides that may be attributable to the effluents from the facility.

Waterborne - Surface The "upstream sample" shall be taken at a distance beyond significant influence of the discharge. The "downstream" sample shall be taken in the discharge line.

(continued)

B 3.11.4.1 Monitoring Program

BASES (continued)

TRS (continued)

Waterborne - Drinking - Sampling and Collection Frequency A composite sample is one in which the quantity (aliquot) of liquid sampled is proportional to the quantity of flowing liquid and in which the method of sampling employed results in a specimen that is representative of the liquid flow. In this program composite samples shall be collected at time intervals that are very short (e.g., hourly) relative to the compositing period (e.g., monthly) in order to assure obtaining a representative sample.

Waterborne - Ground - Samples and Sample Locations Groundwater samples shall be taken when this source is tapped for drinking or irrigation purposes in areas where the hydraulic gradient or recharge properties are suitable for contamination.

Drinking Water - I-131 Analyses Calculation of the dose projected from I-131 in drinking water to determine if I-131 analyses of the water are required shall be performed for the maximum organ and age group using the methodology and parameters of the ODCM.

Food Products - Sampling and Collection Frequency If harvest occurs more than once a year, sampling shall be performed during each discrete harvest. If harvest occurs continuously, sampling shall be monthly. Attention shall be paid to including samples of tuborous and root food products.

Table 3.11.4.1-3

This list does not mean that only these nuclides are to be considered. Other peaks that are identifiable at 95% confidence level together with those of the above nuclides, shall also be analyzed and reported in the Annual Radiological Environmental Operating report.

Required detection capabilities for thermoluminescent dosimeters used for environmental measurements are given in Regulatory Guide 4.13. (Reference 4)

(continued)

B 3.11.4.1 Monitoring Program

BASES (continued)

TRS (continued) The LLD is defined, for purpose of these Requirements, as the smallest concentration of radioactive material in a sample that will yield a net count (above system background) that will be detected with 95% probability with only 5% probability of falsely concluding that a blank observation represents a "real" signal.

For a particular measurement system (which may include radiochemical separation):

$$LLD = \frac{4.66 s_b}{E \bullet V \bullet 2.22 \bullet Y \bullet \exp(-\lambda \Delta t)}$$

Where:

LLD is the *a priori* lower limit of detection as defined above (as picrocuries per unit mass or volume),
s_b is the standard deviation of the background counting rate or of the countingrate of a blank sample as appropriate (as counts per minute),
E is the counting efficiency, as counts per disintegration,
V is the sample size, in units of mass or volume,
2.22 is the number of disintegrations per minute per picrocurie,
Y is the fractional radiochemical yield, when applicable,
λ is the radioactive decay constant for the particular radionuclide, and
Δt for environmental samples is the elapsed time between sample collection (or end of the sample collection period) and time of counting.

Typical values of E, V, Y, and Δt should be used in the calculation.

(continued)

B 3.11.4.1 Monitoring Program

BASES (continued)

TRS (continued

It should be recognized that the LLD is defined as *a priori* (before the fact) limit representing the capability of a measurement system and not as an *a posteriori* (after the fact) limit for a particular measurement. Analyses shall be performed in such a manner that the stated LLDs will be achieved under routine conditions. Occasionally background fluctuations, unavoidably small sample sizes, the presence of interfering nuclides, or other uncontrollable circumstances may render these LLDS unachievable. In such cases, the contributing factors shall be identified and described in the Annual Radiological Environmental Operating Report.

REFERENCES

1. HASL Procedures Manual, HASL-300 (revised annually); Curie, L.A., "Limits for Qualitative Detection and Quantitative Determination - Application to Radiochemistry" Anal. Chem. 40, 586-93 (1968); and Hartwell, J. K., "Detection Limits for Radioanalytical Counting Techniques," Atlantic Richfield Hanford Company Report ARH-SA-215 (June 1975)Offsite Dose Calculation Manual.
2. Technical Specification 5.5.1 - Offsite Dose Calculation Manual
3. NUREG-0133, "Preparation of Radiological Effluent Technical Specifications for Nuclear Power Plants," October 1978, and to Radiological Assessment Branch Technical Position, Revision 1, November 1979.
4. Regulatory Guide 4.13

B 3.11.4.2 Land Use Census

BASES

TRO

The Land Use Census shall identify within a distance of 8 km (5 miles) the location in each of the 16 meteorological sectors of the nearest milk animal, the nearest residence and the nearest garden of greater than 50m^2 (500ft^2) producing broad leaf vegetation.

This Requirement is provided to ensure that changes in the use of areas at and beyond the SITE BOUNDARY are identified and that modifications to the monitoring program are made if required by the results of this census. The best information from the door-to-door survey, aerial survey or consulting with local agricultural authorities or any combination of these methods shall be used. This census satisfies the requirements of Section IV.B.3 of Appendix I to 10 CFR Part 50. Restricting the census to gardens of greater than 500 square feet provides assurance that significant exposure pathways via leafy vegetables will be identified and monitored since a garden of this size is the minimum required to produce the quantity (26 kg/year) of leafy vegetables assumed in Regulatory Guide 1.109 for consumption by a child. To determine this minimum garden size, the following assumptions were used: 1) that 20% of the garden was used for growing broad leaf vegetation (i.e., similar to lettuce and cabbage), and 2) a vegetation yield of 2 kg/square meter. (Reference 1 and 2)

Broad leaf vegetation sampling of at least three different kinds of vegetation may be performed at the site boundary in each of two different direction sectors with the highest predicted D/Qs in lieu of the garden census. Specifications for broad leaf vegetation sampling in Table 3.11.4.1-1 item 4c shall be followed, including analysis of control samples.

This section of the TRM is also part of the ODCM (Reference 3).

Actions

The Actions are defined to ensure proper corrective measures are taken in when requirements are not met.

(continued)

B 3.11.4.2 Land Use Census

BASES (continued)

ACTIONS (continued)	The sampling location(s), excluding the control station location, having the lowest calculated dose, or dose commitment(s) (via the same exposure pathway) may be deleted from the monitoring program after October 31 of the year in which the land use census was conducted.
TRS	The TRSs are defined to be performed at the specified Frequency to ensure that the requirements are implemented. The Land Use Census shall be conducted during the growing season at least once per 12 months using that information that will provide the best results, such as by a door-to-door survey, aerial survey, or by consulting local agriculture authorities. The results of the land use census shall be included in the Annual Radiological Environmental Operating Report.
REFERENCES	1 10 CFR Part 50 2 Regulatory Guide 1.109, "Calculation of Annual Doses to Man from Routine Releases of Reactor Effluents for the Purpose of Evaluating Compliance with 10 CFR Part 50, Appendix I," Revision 1, October 1977 3 Technical Specification 5.5.1 - Offsite Dose Calculation Manual

B 3.11.4.3 Interlaboratory Comparison Program

BASES

TRO	The Interlaboratory Comparison Program shall be accepted by the Commission. The requirement for participation in an Interlaboratory Comparison Program is provided to ensure that independent checks on the precision and accuracy of the measurements of radioactive material in environmental sample matrices are performed as part of the quality assurance program for environmental monitoring in order to demonstrate that the results are reasonably valid for the purpose of Section IV.B.2 of Appendix I to 10 CFR Part 50. (Reference 1) This part of the TRM is also part of the ODCM (Reference 2)
Actions	The Actions are defined to ensure proper corrective measures are taken in response to the detection of unacceptably large deviations (systematic biases) from known values for the quantities being measured. The corrective actions taken to prevent a recurrence shall be reported to the Commission in the Annual Radiological Environmental Operating Report.
TRS	The TRSs are defined to be performed at the specified Frequency to ensure that the requirements are implemented.
REFERENCES	1. 10 CFR Part 50 2. Technical Specification 5.5.1 - Offsite Dose Calculation Manual

3.6 Containment

3.6.1 VENTING or PURGING

TRO 3.6.1 VENTING or PURGING of the primary containment shall be performed only with the following conditions established:

1. Both Standby Gas Treatment Systems shall be OPERABLE in accordance with LCO 3.6.4.3 "Standby Gas Treatment (SGT) System" and whenever the purge system is in use during MODE 1, 2, or 3, only one of the SGT System trains may be used.

2. LCO 3.3.6.1 "Primary Containment Isolation Instrumentation" Function 2.e "SGTS Exhaust Radiation - High" shall be OPERABLE.

APPLICABILITY: Whenever primary containment VENTING or PURGING is in progress.

ACTIONS

CONDITION	REQUIRED ACTION	COMPLETION TIME
A. VENTING and PURGING requirements not met.	A.1 Suspend all VENTING and PURGING of the primary containment.	Immediately

TECHNICAL REQUIREMENT SURVEILLANCE

SURVEILLANCE		FREQUENCY
TRS 3.6.1.1	Verify that the requirements of TRO 3.6.1 "VENTING and PURGING" are met.	Within 4 hours prior to start of VENTING or PURGING of the primary containment AND 12 hours

B 3.6.1 VENTING or PURGING

BASES

TRO

This TRO establishes the requirements necessary to VENT or PURGE the Primary Containment to provide reasonable assurance that releases from the Primary Containment during purging operations will be maintained As Low As Reasonably Achievable for unrestricted areas. The following requirements are specified:

Flow must be maintained through Standby Gas Treatment System and when venting or purging both SGTS must be OPERABLE and only one can be aligned for purging. This requirement is established to ensure all flow is filtered through the SGTS System, to minimize the chance of an inadvertent release and to ensure, during purging, SGTS capability is maintained by ensuring the redundant system is available.

Ventilation evolutions to support habitability of the Drywell or the Suppression Chamber performed in Modes 4 and 5 shall be performed with the "SGTS Exhaust Radiation - High" Isolation Instrumentation OPERABLE. This is required to ensure all releases are monitored and any detection of excessive radiation results in the automatic termination of the evolution. In MODES 1, 2, or 3, this instrument Function is required to be OPERABLE per Technical Specification, so no redundant requirement is necessary in this TRO. (Reference 2)

PURGING and VENTING as defined in the Technical Requirements Manual Definitions refer to the controlled process of discharging air or gas from a "confinement" in order to maintain various operating conditions, either with or without replacement air or gas.

The basis for this requirement is to provide a reasonable assurance that releases from the Primary Containment purging operations will not exceed the annual dose limits of 10 CFR Part 20 for unrestricted areas.

(continued)

B 3.6.1 VENTING or PURGING

BASES (continued)

TRO (continued)	Any ventilation evolutions performed during MODES 4, 5 or defueled, to support habitability of the Drywell or the Suppression Chamber, with any of the Containment hatches removed or access doors open with interlocks defeated, do not constitute VENTING or PURGING as defined. This is due to the fact that in such cases, the Drywell or the Suppression Chamber is not a "confinement". Therefore, the provisions of this TRO requiring two OPERABLE trains of the Standby Gas Treatment System are not applicable.
ACTIONS	The Actions are defined to ensure proper corrective measures are taken in response to the non-compliance with the TRO requirements.
TRS	The TRSs are defined to be performed at the specified Frequency to ensure compliance with the TRO requirements
REFERENCES	1. 10 CFR Part 20 2. FSAR Section 6.5.1.1