Tennessee Valley Authority, Post Office Box 2000, Spring City, Tennessee 37381-2000

MAY 0 5 2004

WBN-TS-03-12

10 CFR 50.90

U.S. Nuclear Regulatory Commission
ATTN: Document Control Desk
Washington, D. C. 20555

In the Matter of the	)	Docket No. 50-390
Tennessee Valley Authority	)	

WATTS BAR NUCLEAR PLANT (WBN) – LICENSE AMENDMENT (WBN-TS-03-12) MONITORING OF CONTROL OR SHUTDOWN ROD POSITION BY AN ALTERNATE MEANS - REQUEST FOR ADDITIONAL INFORMATION (RAI) (TAC MC 1419)

Pursuant to 10 CFR 50.90, TVA submitted a request for an Operating License change (WBN-TS-03-12) to license NPF-90 for WBN Unit 1 on November 21, 2003. The proposed amendment revises Technical Specification (TS) 3.1.8, "Rod Position Indication (RPI)," to allow the position of the control and shutdown rods to be monitored by a means other than the moveable incore detectors. NRC transmitted to TVA on January 22, 2004, an RAI on the proposed amendment and provided in the Enclosure 1 is TVA's response to the RAI. Enclosure 2 contains an updated annotated version of TS 3.1.8 and Bases.

A001

There are no regulatory commitments in this submittal and if there are any questions regarding this letter, please contact me at (423) 365-1824.

I declare under penalty of perjury that the foregoing is true and correct.
Executed on this 5th day of May, 2004.

Sincerely,

P. L. Pace
Manager, Site Licensing
and Industry Affairs

Enclosures:

1. TVA's Response to NRC's RAI Dated January 22, 2004
2. Updated Annotated Technical Specifications

cc: See page 3

MAY 0 5 2004

PLP:JLB
Enclosures
cc (Enclosures):

NRC Resident Inspector
Watts Bar Nuclear Plant
1260 Nuclear Plant Road
Spring City, Tennessee 37381

Ms. M. H. Chernoff, Project Manager
U.S. Nuclear Regulatory Commission
MS 08G9
One White Flint North
11555 Rockville Pike
Rockville, Maryland 20852-2738

Mr. M. L. Marshall, Project Manager
U.S. Nuclear Regulatory Commission
MS 08G9
One White Flint North
11555 Rockville Pike
Rockville, Maryland 20852-2738

U.S. Nuclear Regulatory Commission
Region II
Sam Nunn Atlanta Federal Center
61 Forsyth St., SW, Suite 23T85
Atlanta, Georgia 30303

Mr. Lawrence E. Nanny, Director
Division of Radiological Health
3rd Floor
L & C Annex
401 Church Street
Nashville, Tennessee 37243

ENCLOSURE 1

TENNESSEE VALLEY AUTHORITY
WATTS BAR NUCLEAR PLANT (WBN)
UNIT 1
DOCKET NUMBER 390

PROPOSED LICENSE AMENDMENT REQUEST WBN-TS-03-12

RESPONSE TO NRC'S REQUEST FOR ADDITIONAL INFORMATION

NRC Question 1:

The license amendment request proposes an alternate method to verify rod position when one analog rod position indicator (ARPI) per group is inoperable for one or more groups. The licensee intends to use the voltage of the stationary gripper coil as an alternate means to monitor the rod position of the affected ARPI. The license amendment request does not include a detailed description of the proposed alternate monitoring method and its implementation. The staff requests the licensee to provide:

a) a detailed description of the alternate method, including components relied upon in the alternate monitoring method, the correlation between stationary gripper coil voltage and rod motion (criteria for motion), and how the proposed method will allow the use of the existing rod deviation alarm.

b) a description of the reliability of the proposed monitoring method to guarantee the detection of any rod movement.

Clarification of TVA's Response to Question 1.a:

In order to properly address Part "a" of the first question, TVA has divided the response into the following three segments:

NRC Question 1.a.1:

A detailed description of the alternate method, including components relied upon in the alternate monitoring method.

TVA's Response to Question 1.a.1:

The following figure is an example of the wiring for the monitoring of the gripper coil parameters and is based on Control Rod E-5. The wiring for a different rod will terminate at different test points and/or a different power cabinet, but the remainder of the figure is essentially the same:

Figure 1
Example of Wiring for the Monitoring of Gripper Coil Parameters
Example Based on Control Rod E-5

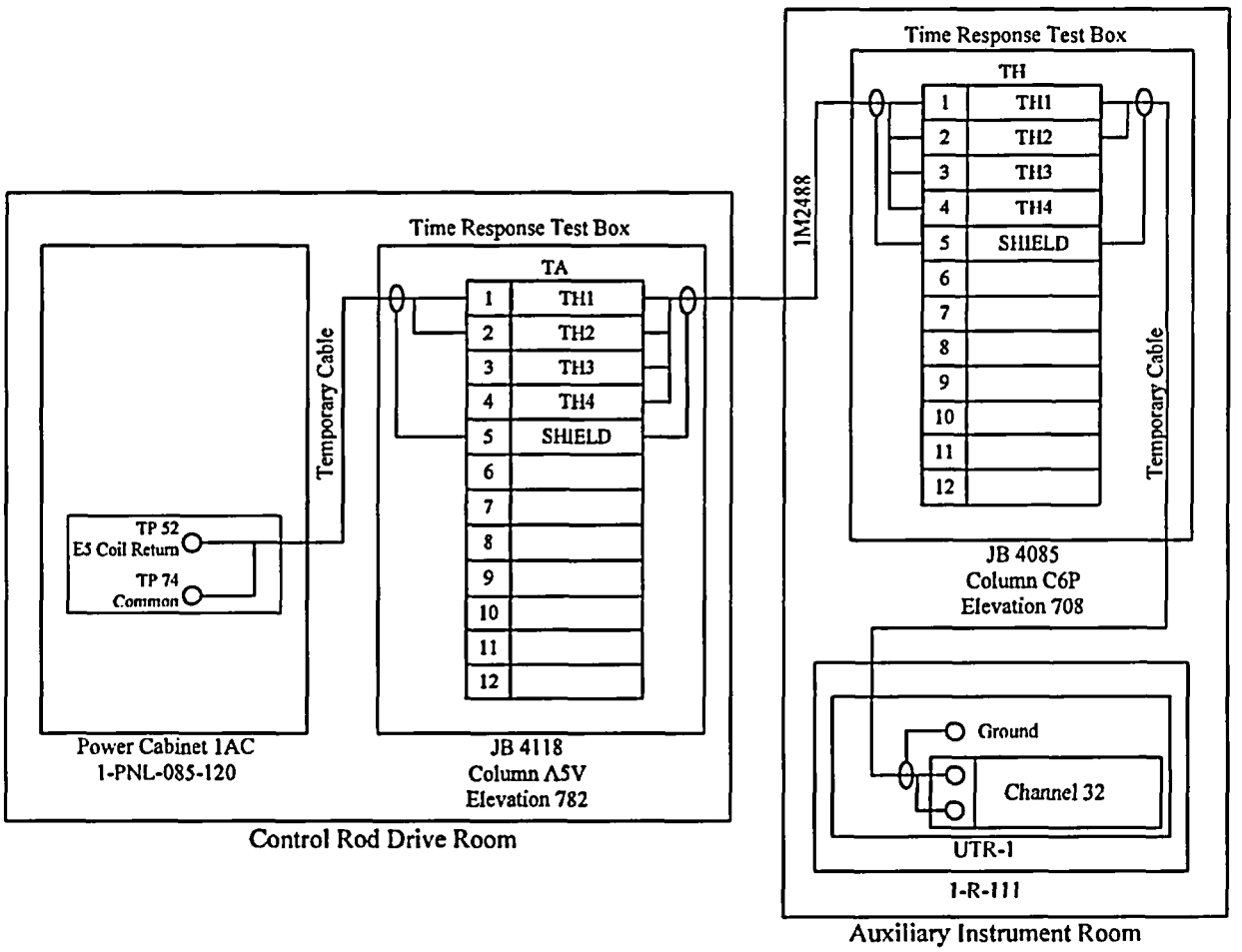

The proposed alternate monitoring method continuously samples current flow to the stationary gripper coil for the rod with the non-functional ARPI. This is accomplished through permanently installed test points in the control rod drive mechanism's associated power cabinet (1-PNL-085-120). The current is converted to a low level voltage signal via a permanently installed 0.0625 ohm, 50W resistor inside the power cabinet. Temporary cabling transfers the low level signal from the test points (one test point for the current and one test point for a ground reference) in the power cabinet to a time response test box [Junction Box (JB) 4118]. 1-PNL-085-120 and JB 4118 are located in the Control Rod Drive Room.

Permanent cabling (1M2488) then transmits the signal from the time response test box (JB 4118) to a time response test box (JB 4085) in the Auxiliary Instrument Room. Temporary cabling transmits the signal from the time response test box (JB 4085) to an electronics rack (1-R-111) that provides an interface with the plant computer. The plant computer digitizes the analog input and uses the input to determine if current is being applied to the stationary gripper for the affected rod (a non-zero signal) or if the gripper is de-energized (a zero signal). Additional detail on the software's evaluation of the stationary gripper parameters is provided in TVA's response to Part 1.a.3 of Question 1. In addition, the plant computer provides an output signal representative of rod position in steps to a digital recorder located on a control board (1-M-5) in the Main Control Room (MCR). This MCR board is adjacent to the control board (1-M-4) where the displays for the ARPIs are located.

NRC Question 1.a.2:

The correlation between stationary gripper coil voltage and rod motion (criteria for motion).

TVA's Response to Question 1.a.2:

Based on documentation from the Nuclear Steam Supply System (NSSS) vendor for WBN, Westinghouse, the stationary gripper coil is supplied with three different current levels; full, reduced, and zero. With no rod motion, the power cabinets supply reduced current to the stationary gripper coils (approx. 4 amps or 250 mV across the 0.0625 ohm sampling resistor). This current is sufficient to ensure that the stationary gripper is engaged with the jack shaft preventing any rod motion.

During rod motion, the stationary gripper coils of the rod group in motion alternate between reduced current, full current (approx. 8 amps or 500 mV), and zero current. The pattern is very distinct, and highly repeatable. WBN records this profile at the end of every outage to verify no degradation of power cabinet components has occurred. Data obtained from this procedure verifies the repeatability of the profile. Again, with full or reduced current applied to the stationary gripper coils, the rods cannot move. When the stationary gripper current falls to zero, the stationary gripper lets go of the jack shaft, and the movable and lift coils act together to cause the rods to step in or out. Following the step, the stationary coil resumes operating at reduced current.

If stationary gripper coil current does not fall to zero, then the rod cannot move barring a highly unlikely mechanical failure between the stationary gripper and the jack shaft. If stationary current falls below a threshold based on the reduced current signal, then the rod can move. If the stationary coil signal returns above the threshold within a fixed amount of time (the duration of zero current for each rod's drive mechanism is within a few milliseconds as verified by testing), then the signal implies that a rod step was taken versus a rod drop.

NRC Question 1.a.3:

How the proposed method will allow the use of the existing rod deviation alarm.

TVA's Response to Question 1.a.3:

Based on the preceding discussion, each time the plant computer detects a drop below the threshold for stationary gripper coil current, an algorithm will begin a timer. If the signal does not return above the threshold within a fixed amount of time, the plant computer will generate alarm indicating the possibility of a dropped rod or a failure in the alternate method of monitoring rod position. If the signal does return above the threshold within the fixed amount of time, the same computer algorithm will use a signal from the rod control logic cabinet that is already present in the plant computer to determine if a step was demanded by the rod control system. If a step was not demanded, the plant computer will generate an alarm. Otherwise, the computer algorithm will increment or decrement a counter representing rod position based on the signal from the rod control logic cabinet (i.e., step out or step in). The initial value of the counter will be determined from bank demand and verified by a use of the incore detectors after the normal means of rod position indication fails. This counter will then be used by the plant computer to determine deviation from other rods and from the bank associated with the rod with the failed rod position indication. If the counter exceeds deviation limits, then the plant computer will generate a deviation alarm as it does currently.

NRC Question 1.b:

A description of the reliability of the proposed monitoring method to guarantee the detection of any rod movement.

TVA's Response to Question 1b:

The alternate method is highly reliable in determining rod movement based on a highly repeatable stationary gripper current profile. WBN verifies the current profiles to the control rod drive mechanisms for all 57 rods every outage. Testing, to date, has not revealed any discrepancies. This suggests that the stationary gripper coil current profile is a reliable indication of rod motion. A software algorithm in the plant computer monitors this profile to look for the characteristics of rod movement. This software algorithm has been tested, and successfully detected rod steps based on the stationary gripper coil current signal.

As described in TVA's response to Part 1.a.1 of this question above, the alternate method relies on some passive components (test point resistor, temporary cabling, permanent plant cabling) and some active components (plant computer interface channels). If any of these components should fail, the alternate method will detect a zero signal for longer than the normally expected time, and produce a computer alarm informing the operators that the alternate method has malfunctioned, and is no longer reliable.

NRC Question 2:

In the current LCO 3.1.8, if one ARPI per group is inoperable for one or more groups, Required Action A.1 requires rod position verification once per 8 hours by using the movable incore detectors. The proposed amendment would provide an option to initially verify the position of the rod with inoperable ARPI using the movable incore detectors within 8 hours and then review the stationary gripper coil parameters verify any rod movement by using the stationary gripper coil parameters once per 12 hours after the first verification is completed within 16 hours. If the stationary gripper coil parameters indicate an unintended rod movement, the licensee will proceed to verify the rod position using the movable incore detectors anew, which allows up to 8 hours for completion. This implies that the rod position with the inoperable ARPI could be without verification for up to 20 hours (12 hours completion time to verify the stationary gripper coil parameters plus 8 hours to complete the movable incore detectors). The staff requests the licensee to provide the technical bases for the extended completion times as proposed in the changes to Technical Specification (TS) 3.1.8.

TVA's Response to Question 2:

The primary reason for the proposed amendment is TVA's desire to limit the use of the moveable incore detectors. The completion time for Action A.2.2 is set at 16 hours. Within the first 8 hours of the 16 hour period, the incore detectors must be used to establish the position of the affected rod. This will satisfy the 8 hour Completion Time of Actions A.1 and A.2.1. The remaining 8 hours of the 16 hour period will be used to implement the alternate monitoring scheme. If this can not be achieved, then another flux map will have to be performed to satisfy Actions A.1 and A.2.1 before the second 8 hour period expires.

Once implemented, the proposed monitoring method provides the ability to continuously monitor the position of the affected rod via a recorder. The plant computer provides an output signal representative of rod position in steps to a digital recorder located on a control board (1-M-5) in the Main Control Room (MCR). This MCR board is adjacent to the control board (1-M-4) where the displays for the ARPIs are located. Further, the implementation of the proposed monitoring method makes the deviation monitor for the affected rod continuously available.

Surveillance Requirement (SR) 3.1.5.1 of Limiting Condition for Operation (LCO) 3.1.5, "Rod Group Alignment Limits," verifies once every 12 hours that individual rod positions are within alignment limits. The 12 hour frequency of SR 3.1.5.1 coincides with WBN's Operations shift

schedule. Although an Operator can check the rod position indication on the digital recorder or the plant computer at any time after implementation of the alternate monitoring method, the Operators will only be required to officially verify the position of the rod once every 12 hours in conjunction with the performance of SR 3.1.5.1.

As stated in TVA's response to Question 1.b of this RAI, a failure in any portion of the alternate monitoring method will result in the plant computer generating an alarm indicating that alternate method can no longer monitor the position of the rod. This will require that the position of the rod with the inoperable ARPI be established using the incore detectors in accordance with Required Action A.1 or Required Action A.2.1. The 8 hour frequency will start immediately after there is indication that the alternate monitoring is not functioning and will continue until the alternate monitoring can be reestablished.

NRC Question 3:

The license amendment request does not include a discussion regarding the impact of the proposed amendment on specific operators training and plant procedures. The staff requests specific information regarding the plant operating procedures to be revised. Will procedure revisions and operator training be completed prior to implementation of the proposed license amendment?

TVA's Response to Question 3:

The proposed alternate monitoring will be implemented as a Temporary Alteration (TA) in accordance with TVA procedure Standard Programs and Processes (SPP) 9.5, "Temporary Alterations." The wiring configuration for the implementation of the TA is represented in Figure 1 and in the discussion associated with TVA's response to Question 1.a of the RAI. Figure 1 represents Control Rod E-5 and is provided as an example of the scope of the TA. Depending on which rod is affected rod, a version of the TA that addresses the specific wiring for the affected rod will have to be initiated and approved. The TA initiation and evaluation processes defined in SPP-9.5 require that the procedures impacted by the TA be identified and revised.

Once amendment request WBN-TS-03-12 is approved by NRC, the requirements of Standard Department Procedure NADP-6, "Technical Specifications/Licenses and Amendments," will be followed for the implementation of the amendment. This procedure requires that reviews be performed to identify the procedures impacted by the changes to the TS. This review and the impact review performed for SPP-9.5, require that potential impacts to the Updated Final Safety Analysis Report (UFSAR) and to training be identified. The SPP-9.5 and NADP-6 processes will ensure that the documents (procedures, training lesson plans and UFSAR) impacted by the proposed amendment are updated once the amendment is approved.

In an effort to provide additional assurance that the implementation of the TA is assessed properly, the following paragraph has been added to the Bases changes proposed for LCO 3.1.8, "Rod Position Indication:"

"The modifications required for the monitoring of the stationary gripper coil will be implemented as a temporary alteration (TA). Implementation of the TA includes a review for the impact on plant procedures and training. This ensures that changes are initiated for key issues like the monitoring requirements in the control room, and operator training on the temporary equipment."

NRC Question 4:

The licensee considered the reactor startup within the operational events that can be impacted by rod drop or rod misalignment. The licensee stated that they plan to use the proposed monitoring method for a situation where there is an unplanned outage that does not result in an entry into Mode 5. Additionally, the licensee stated that the alternate method will be utilized during reactor startup to provide initial verification that the affected rod is fully withdrawn by monitoring CRDM traces. According to the licensee, the proposed method would permit start up and entry into Mode 2. The staff requests the licensee to explain:

a) How the proposed method will provide initial verification that the affected rod is fully withdrawn and what CRDM traces will be monitored.

b) The basis for Mode 2 entry with an inoperable ARPI.

c) The requirement(s) applicable to Mode 5, 4, 3 or 2 entry (restart following an outage that involved entry into Modes 5 or 6) with an inoperable ARPI.

TVA's Response to Question 4:

LCO 3.1.8 is applicable in Modes 1 and 2 and the specification is currently worded as follows:

CONDITION	REQUIRED ACTION		COMPLETION TIME
A. One ARPI per group inoperable for one or more groups.	A.1	Verify the position of the rods with inoperable position indicators by using movable incore detectors.	Once per 8 hours
	OR		
	A.2	Reduce THERMAL POWER to ≤ 50% RTP.	8 hours

For a situation where one ARPI is inoperable, Condition A of LCO 3.1.8 is applicable. Required Action A.1 or A.2 may be entered and the unit may operate for an indefinite period of time, as long as compliance with the actions is maintained. The issue of mode changes while complying with a Required Action was clarified by NRC in Generic Letter 87-09, "Sections 3.0 and 4.0 of the Standard Technical Specifications (STS) on the Applicability of Limiting Conditions for Operation and Surveillance Requirements." The following statement is an excerpt from the Generic Letter:

> "For an LCO that has Action Requirements permitting continued operation for an unlimited period of time, entry into an operational mode or other specified condition of operation should be permitted in accordance with those Action Requirements. This is consistent with NRC's regulatory requirements for an LCO. The restriction on a change in operational modes or other specified conditions should apply only where the Action Requirements establish a specified time interval in which the LCO must be met or a shutdown of the facility would be required..."

The above statement is consistent with LCO 3.0.4 in WBN's TS. Therefore, in compliance with the current WBN TS, the unit may be shutdown to a mode where LCO 3.1.8 is not applicable (Mode 3, 4, 5 or 6) and returned to power operation, as long as Required Actions A.1 and A.2 are complied with. Compliance with Action A.2 allows indefinite operation of the unit at less than or equal to 50 percent power with the inoperable ARPI and this power level adequately supports use of the incore detectors for verification that the affected rod is aligned with the bank. In order to confirm the capabilities of the incore detectors at low reactor power levels (2 percent to less than or equal to 50 percent), TVA requested information from Westinghouse. A reply from Westinghouse was provided in a letter (WAT-D-11222) dated February 24, 2004, and stated that the system is fully capable of indicating the position of a rod at power levels less than 50 percent.

The verification of the rod's position through use of the incore detectors fulfills Required Action A.1 and A.2.1 for the rod with an inoperable ARPI and consistent with the proposed amendment, the alternate monitoring (Required Action A.2.2) may be invoked. In the response to Question 1.a of NRC's RAI, TVA clarifies what data will be cataloged by the plant computer and the digital recorder in the MCR based on the signal from the stationary gripper coil. TVA intends to use the incore detectors to establish the position of the affected rod during the process. Once established, the position of the rod can be programmed into computer and changes in the position of the rod will be logged by the computer and the recorder. Based on this, unit operation for startup following a trip or shutdown will proceed in the following manner:

1. Verification that the equipment for the monitoring of the stationary gripper coil is in place and can be used to implement proposed Required Action A.2.2.

2. Entry into Mode 2 from Mode 3 and operation to less than 50 percent power in accordance proposed Required Action A.3.

3. Verification of the position of the affected rod using the incore detectors in accordance with Required Action A.1 or A.2.1.

4. Programming of the rod location into the plant computer. At this point the stationary gripper coil may be used to monitor the position of the rod.

5. Power escalation to 100 percent power and a verification of the position of the rod using the incore detectors.

6. Completion of Step 5 will begin the 31 day frequency for the next verification of the position of the rod using the incore detectors in accordance with Required Action A.2.1

7. Completion of Step 5 will also begin the 16 hour frequency for the review of the stationary gripper coil parameters in accordance with Required Action A.2.2.

In the section titled "Rod Drop or Misalignment during Reactor Startup," of the November 21, 2003, amendment request, TVA indicated the affected rod will be "fully withdrawn." This needs to be clarified. If the affected rod is a shutdown rod or a control rod in Bank A, or B, the rod will be fully withdrawn. If the affected rod is in either control rod Bank C or D, then the rod will be withdrawn to greater than or equal to the step stipulated for power operation in the Core Operating Limit Report (COLR).

NRC Question 5:

The licensee considered the reactor trip within the operational events that can be impacted by rod drop or rod misalignment. Please describe any impacts that the proposed monitoring method could introduce with respect to ensuring that shutdown margin requirements remain satisfied.

TVA's Response to Question 5:

Section 1.1, "Definitions," of the WBN TS defines Shutdown margin (SDM) in the following manner:

> "SDM shall be the instantaneous amount of reactivity by which the reactor is subcritical or would be subcritical from its present condition assuming:
>
> a. All rod cluster control assemblies (RCCAs) are fully inserted except for the single RCCA of highest reactivity worth, which is assumed to be fully withdrawn. With any RCCA not capable of being fully inserted, the reactivity worth of the RCCA must be accounted for in the determination of SDM; and
>
> b. In MODES 1 and 2, the fuel and moderator temperatures are changed to the nominal zero power design level."

Consistent with this, the TS Bases indicates that SDM is controlled during power operation by operating with the shutdown banks within the limits of LCO 3.1.6, "Shutdown Bank Insertion Limits," and the control banks within the limits of LCO 3.1.7, "Control Bank Insertion Limits." In addition to this, several LCOs (listed below) require that the SDM be verified:

LCO	Applicable Requirements
3.1.1, SDM — Tavg > 200°F	LCO statement SR 3.1.1.1
3.1.2, SDM—Tavg = 200°F	LCO statement SR 3.1.2.1
3.1.5, Rod Group Alignment Limits	Condition A Condition B Condition D
3.1.6, Shutdown Bank Insertion Limits	Condition A
3.1.7, Control Bank Insertion Limits	Condition A Condition B
3.1.9, Physics Tests Exceptions - MODE 1	LCO statement SR 3.1.9.4
3.1.10, Physics Tests Exceptions - MODE 2	LCO statement SR 3.1.10.3
3.3.1, RTS Instrumentation	Condition L

When required, the verification of SDM is performed in accordance with Surveillance Instruction (SI) 1-SI-0-10, "Shutdown Margin." Performance of this SI in Modes 1 and 2 calculates the SDM as if the unit had tripped and is in Mode 3. The response to a unit trip in WBN's current emergency procedures ensures that appropriate action is taken to establish the reactor is shutdown and stable. Operator actions in response to a reactor trip which requires operation of the Safety Injection System (SIS), are controlled by Emergency Operating Instruction E-0, "Reactor Trip or Safety Injection." Step 1 of E-0 verifies the reactor is shutdown.

The expected response of an ARPI is for it to be at the bottom of the scale following a reactor trip. This will not occur for the rod with a non-indicating ARPI. Therefore, for a reactor trip where operation of the SIS is not required, the operator's response is controlled by Emergency Operating Instruction ES-0.1. Step 5 of this instruction verifies that all rods have fully inserted and if two or more rods are not indicating fully inserted, action is taken to initiate the addition of boron which has a concentration of at least 6120 ppm. During this action, 3250 gallons of the 6120 ppm concentration is added for each rod that has not fully inserted.

NRC Question 6:

10 CFR, Part 50, Appendix A, General Design Criteria 13 (GDC-13) requires that licensee provide instrumentation to monitor the variables and systems over their operating ranges during normal operation, anticipated operational occurrences, and accident conditions. The staff requests the licensee to provide a discussion of how the proposed monitoring method satisfies the requirements of GDC-13.

TVA's Response to Question 6:

According to GDC 13, instrumentation must be available for an operational unit to monitor the variables and systems during normal operation, anticipated operational occurrences, and accident conditions. In addition, the operability, including position indication, of the shutdown and control rods is an initial assumption in all safety analyses that assume rod insertion upon reactor trip. The GDC and analysis assumptions are fulfilled by the design of the ARPI system along with the controls imposed by LCO 3.1.8.

The principal functions of the ARPI system include the ability to:

1. Maintain control rod alignment and insertion limits.
2. Manage acceptable power distributions.
3. Maintain appropriate shutdown margins.
4. Limit the potential effects of a rod misalignment on associated accidents.

With consideration of the above functions that the ARPI system must satisfy, TVA provided in Section 4.0 of the license amendment request dated November 21, 2003, a discussion of the following operational events:

1. Rod drop or rod misalignment during power operation.
2. Rod drop or rod misalignment during reactor startup.
3. Reactor trip.

The intent of this discussion was to identify how other available instrumentation or operational controls may be used to satisfy the GDC requirements. As stated in Section 15.2.3, "Rod Cluster Control Assembly Misalignment," of the UFSAR, a rod drop during power operation is normally detected by:

1. Sudden drop in the core power level is seen by the nuclear instrumentation system (excore nuclear detectors).
2. Asymmetric power distribution as indicated by the incore detectors or core exit thermocouples.

3. Rod at bottom signal.
4. Rod deviation alarm (control banks only).
5. Rod position indication.

For the rod affected by the inoperable ARPI, rod position indication and the rod bottom signal will not be available. The other three indications are available along with the indications (computer and recorder) provided by the monitoring of the gripper coil. As indicated in TVA's response to Question 1.a of this RAI, the proposed amendment was structured such that any unintended movement of a rod will be alarmed and will result in the use of the incore movable detectors to verify the position of the rod. This is controlled by Required Action A.2.1 of the proposed amendment once gripper coil monitoring has been implemented and provides added assurance that a rod drop or misalignment will be detected.

TVA is aware that the alternate monitoring equipment does not provide a means by itself to verify full rod insertion following a reactor trip or shutdown as required by GDC-13. However, TVA's response to Question 5 of this RAI regarding SDM describes the actions currently in place in WBN's emergency procedures that address the addition of boron into the Reactor Coolant System (RCS) following a plant trip.

The use of the alternate monitoring equipment during unit startup is addressed in TVA's response to Question 4 of NRC's RAI. Based on the preceding information and that provided in Section 4.0 of the license amendment request, TVA considers that sufficient indication and controls will be provided by existing plant equipment, the alternate monitoring equipment and site procedures to ensure that either the position of the affected rod is known or in the event of a reactor trip or shutdown, procedural controls will ensure adequate SDM is maintained even with an inoperable ARPI. This position is also supported by TVA's response to Question 1.a of this RAI.

NRC Question 7:

The staff requests the licensee to explain if the proposed TS change and use of the alternate method have any impact on verification of power distribution TS's such as peaking factors, Rod Alignment Limits, Rod Insertion Limits, or on the UFSAR Chapter 15 transient analysis.

TVA's Response to Question 7:

There is no impact on the verification of power distribution TSs such as peaking factors, rod alignment limits, rod insertion limits. In addition, the UFSAR Chapter 15 transient analysis is not impacted by the implementation of this change. The affected control rod will be assumed to remain functional and aligned until verification to the contrary at a reactor power level less than 50 percent. Should the rod be determined to be positioned other than assumed, a flux map will be utilized to confirm the peaking factors and appropriate actions will be taken to correct deviations.

ENCLOSURE 2

TENNESSEE VALLEY AUTHORITY
WATTS BAR NUCLEAR PLANT (WBN)
UNIT 1
DOCKET NUMBER 390

PROPOSED LICENSE AMENDMENT REQUEST WBN-TS-03-12
ANNOTATED TECHNICAL SPECIFICATIONS (TS) AND BASES

On November 21, 2003, TVA submitted a proposed license amendment to revise Technical Specification (TS) 3.1.8, "Rod Position Indication (RPI)." This amendment request describes a process for the monitoring of the position of a rod with a failed RPI and limiting the use of the moveable incore detectors. TVA provided in Enclosure 3 of the November 21, 2003, letter an annotated version of the TS and Bases impacted by the proposed amendment. The intent of Required Actions A.2.1 and A.2.2 is to address unintended rod movement. This is clearly stated in Required Action A.2.2 and in the Bases for Required Actions A.2.1 and A.2.2. However, the Completion Time for Action A.2.1 should be clarified to indicate the action applies only to unintended movement. In addition, the Bases to TS 3.1.8 were updated to discuss the implementation of the alternate monitoring process.

Provided as follows is an updated version of the affected TS and Bases to reflect the needed clarifications. The wording additions initially submitted in TVA's November 21, 2003, letter are shown as bold-italicized text and deletions are shown as strikethrough. The clarifications made to Action A.2.1 and the Bases are specifically annotated on Page 3.1-17 of the TS and Bases Page B 3.1-52. The pages affected by the proposed amendment include:

TS and Bases Affected Page List:
3.1-17
3.1-18
3.1-19
B 3.1-52
B 3.1-52a

3.1 REACTIVITY CONTROL SYSTEMS

3.1.8 Rod Position Indication

LCO 3.1.8 The Analog Rod Position Indication (ARPI) System and the Demand Position Indication System shall be OPERABLE.

APPLICABILITY: MODES 1 and 2.

ACTIONS

----------NOTE----------
Separate Condition entry is allowed for each inoperable rod position indicator per group and each demand position indicator per bank.

CONDITION	REQUIRED ACTION	COMPLETION TIME
A. One ARPI per group inoperable for one or more groups.	A.1 Verify the position of the rods with inoperable position indicators by using movable incore detectors.	Once per 8 hours
	OR	
	A.2.1 Verify the position of the rods with inoperable position indicators by using movable incore detectors.	***8 hours***
		AND
		Once every 31 days thereafter
		AND
	AND	***8 hours, if stationary gripper coil parameters indicate unintended movement***

"Unintended" added in RAI Response

(continued)

ACTIONS

CONDITION	REQUIRED ACTION	COMPLETION TIME
A. (continued)	***A.2.2 Review the parameters of the stationary gripper coil for indications of unintended rod movement for the rods with inoperable position indicators.***	***16 hours***
	AND	
		Once per 12 hours thereafter
	OR	
	A.3 ~~2~~ Reduce THERMAL POWER to ≤ 50% RTP.	8 hours
B. One or more rods with inoperable position indicators have been moved in excess of 24 steps in one direction since the last determination of the rod's position.	B.1 Verify the position of the rods with inoperable position indicators by using movable incore detectors.	4 hours
	OR	
	B.2 Reduce THERMAL POWER to ≤ 50% RTP.	8 hours
C. One demand position indicator per bank inoperable for one or more banks.	C.1.1 Verify by administrative means all ARPIs for the affected banks are OPERABLE.	Once per 8 hours
	AND	
	C.1.2 Verify the most withdrawn rod and the least withdrawn rod of the affected banks are ≤ 12 steps apart.	Once per 8 hours
		(continued)

ACTIONS

CONDITION	REQUIRED ACTION	COMPLETION TIME
C. (continued)	OR C.2 Reduce THERMAL POWER to ≤ 50% RTP.	8 hours
D. Required Action and associated Completion Time not met.	D.1 Be in MODE 3.	6 hours

SURVEILLANCE REQUIREMENTS

SURVEILLANCE		FREQUENCY
SR 3.1.8.1	Verify each ARPI agrees within 12 steps of the group demand position for the full indicated range of rod travel.	18 months

BASES

ACTIONS (continued)

A.2.1, A.2.2

Required Action A.2.1 and Action A.1 are essentially the same. Therefore, the discussion provided above for Action A.1 applies to Action A.2.1. The options provided by Actions A.2.1 and A.2.2 allow for continued operation in a situation where the component causing the ARPI to be inoperable is inaccessible due to operating conditions (adverse radiological or temperature environment). In this situation, repair of the ARPI cannot occur until the unit is in an operating MODE that allows access to the failed components.

In addition to the initial 8 hour verification, Action A.2.1 also requires the following for the rod with the failed ARPI:

1. *Verification of the position of the rod every 31 days using the incore movable detectors.*

2. *Verification of the position of the rod using the incore movable detectors within 8 hours of the performance of Action A.2.2 whenever there is an indication of unintended rod movement based on the parameters of the stationary gripper coil.*

Action A.2.2 is in lieu of the verification of the position of the rod using the incore movable detectors every 8 hours as required by Action A.1. This action alleviates the potential for excessive wear on the incore system due to the repeated use of the incore detectors. Once the position of the rod with the failed ARPI is confirmed through the use of the moveable incore detectors in accordance with Action A.2.1, the parameters of the stationary gripper coil must be monitored until the failed ARPI is repaired. Should the review of the stationary gripper coil parameters indicate unintended movement of the rod, the position of the rod must be verified within 8 hours in accordance with Action A.2.1.

Paragraph added in RAI response

The modifications required for the monitoring of the stationary gripper coil will be implemented as a temporary alteration (TA). Implementation of the TA includes a review for the impact on plant procedures and training. This ensures that changes are initiated for key issues like the monitoring requirements in the control room, and operator training on the temporary equipment.

(continued)

BASES

ACTIONS (continued)

A.3 ~~2~~

Reduction of THERMAL POWER to ≤ 50% RTP puts the core into a condition where rod position is not significantly affecting core peaking factors (Ref. 13). The allowed Completion Time of 8 hours is reasonable, based on operating experience, for reducing power to ≤ 50% RTP from full power conditions without challenging plant systems and allowing for rod position determination by Required Action A.1 above. ***Consistent with LCO 3.0.4 and this action, unit startup and operation to ≤ 50% RTP may occur with one ARPI per group inoperable.***

B.1 and B.2

These Required Actions clarify that when one or more rods with inoperable position indicators have been moved in excess of 24 steps in one direction, since the position was last determined, the Required Actions of A.1 and A.2 are still appropriate but must be initiated promptly under Required Action B.1 to begin verifying that these rods are still properly positioned, relative to their group positions.

If, within 4 hours, the rod positions have not been determined, THERMAL POWER must be reduced to ≤ 50% RTP within 8 hours to avoid undesirable power distributions that could result from continued operation at > 50% RTP, if one or more rods are misaligned by more than 24 steps. The allowed Completion Time of 4 hours provides an acceptable period of time to verify the rod positions.

C.1.1 and C.1.2

With one demand position indicator per bank inoperable, the rod positions can be determined by the ARPI System. Since normal power operation does not require excessive movement of rods, verification by administrative means that the rod position indicators are OPERABLE and the most withdrawn rod and the least withdrawn rod are ≤ 12 steps apart within the allowed Completion Time of once every 8 hours is adequate.

(continued)