SOUTHERN CALIFORNIA
EDISON®
An EDISON INTERNATIONAL® Company

A. Edward Scherer
Manager of
Nuclear Regulatory Affairs

May 3, 2004

U. S. Nuclear Regulatory Commission
Attention: Document Control Desk
Washington, DC 20555

Subject: **Docket Nos. 50-361 and 50-362**
ASME Code Update for the Third Ten-Year Interval,
Inservice Testing Program
San Onofre Nuclear Generating Station, Units 2 and 3

Reference: Letter from A. E. Scherer (SCE) to the Document Control Desk (NRC) dated June 18, 2003; Subject: ASME Code Update for the Third Ten-Year Interval, Inservice Testing Program, San Onofre Nuclear Generating Station Units 2 and 3

Gentlemen:

This letter provides the approved procedures implementing the San Onofre Units 2 and 3 Inservice Testing (IST) Program for the third ten-year testing interval.

Draft procedures were provided as part of the June 18, 2003, SCE submittal (Referenced) with the commitment to send the approved procedures after they were issued. On May 1, 2004, the third ten-year IST interval began at San Onofre Units 2 and 3. To implement the new program Revision 13 of S023-V-3.4, "Inservice Testing of Pumps," and Revision 26 of S023-V-3.5, "Inservice Testing of Valves" were issued. Copies of these procedures are provided as Enclosures 1 and 2.

If you have any questions or would like additional information concerning this subject, please call Mr. Jack Rainsberry (949) 368-7420.

Sincerely,

Enclosures

cc: B. S. Mallett, Regional Administrator, NRC Region IV
B. M. Pham, NRC Project Manager, San Onofre Units 2 and 3
C. C. Osterholtz, NRC Senior Resident Inspector, San Onofre Units 2 and 3

P.O. Box 128
San Clemente, CA 92674-0128
949-368-7501
Fax 949-368-7575

A047

Enclosure 1

Procedure SO23-V-3.4, Revision 13

Inservice Testing of Pumps Program

INSERVICE TESTING OF PUMPS PROGRAM

TABLE OF CONTENTS

INSERVICE TESTING OF PUMPS PROGRAM

1.0 OBJECTIVES AND SCOPE

1.1 This Program Procedure establishes the requirements for San Onofre preservice and inservice testing to assess the operational readiness of certain centrifugal and positive displacement pumps used in Units 2 and 3 in accordance with the requirements of the Units 2 and 3 Technical Specification 5.5.2.10 and Licensee Controlled Specification (LCS) 5.0.103.2.6, and ASME OM Code-1998 through the 2000 Addenda, Sections ISTA and ISTB. [ISTA-1100]

1.1.1 Test results are used to assess operational readiness of pumps during their service life to perform a specific function in shutting down the reactor, bringing it to cold shutdown or in mitigating the consequences of an accident.

1.2 This Program Procedure identifies the pumps, establishes test intervals, pump parameters to be measured and evaluated, acceptance criteria, corrective action, and records requirements. This guidance is used in the implementing procedures, Reference 2.4.2. These procedures shall be used for the various pump inservice tests. [ISTB-9200]

1.3 Response time testing is required per the Licensee Controlled Specifications (LCS) 3.3.100, and is performed on certain pumps when called for by the IST implementing procedures (Reference 2.4.2).

1.4 To provide the steps to take when required actions or associated completion times of LCS conditions are not met in accordance with Reference 2.1.4.

2.0 REFERENCES

2.1 <u>NRC Commitments</u>

2.1.1 10CFR50, § 50.55a, Codes and Standards

2.1.2 Units 2 and 3 Technical Specifications 3.0.2, 3.0.6, 5.5.2.10, and 5.6

2.1.3 Units 2 and 3 Licensee Controlled Specifications 3.3.100 and 5.0.103.2.6

2.1.4 Licensee Controlled Specification Change 99-021

2.1.5 NRC Generic Letter 89-04, Guidance on Developing Acceptable Inservice Testing programs, April 3, 1989

2.1.6 Document 90055, Pump and Valve Inservice Testing Database, SONGS, Units 2&3

2.1.7 ASME OM Code-1998, Code for Operation and Maintenance of Nuclear Power Plants, Subsections ISTA, General Requirements and ISTB, Inservice Testing of Pumps in Light Water Reactor Nuclear Power Plants including ASME OMa Code-1999, Addenda to ASME OM Code-1998 Code for Operation and Maintenance of Nuclear Power Plants, and, ASME OMb Code-2000 Addenda to ASME OM Code-1998, Code for Operation and Maintenance of Nuclear Power Plants

2.1.8 NUREG 1482, Guidelines for Inservice Testing at Nuclear Power Plants, April 1995

2.1.9 Generic Letter 91-18, "Information to Licensees Regarding two NRC Inspection Manual Sections on Resolution of Degraded and Nonconforming Conditions on Operability", dated November 7, 1991

2.1.10 Letter, James E. Dyer (NRC) to Harold B. Ray (SCE), October 2, 1991; subject: "Safety Evaluation of Licensee Responses to Staff's Technical Evaluation Report Items and Revised Relief Requests to the IST Program for Pumps and Valves - San Onofre Nuclear Generating Station, Units 2 and 3 (TAC Nos. 80642 and 80643)"

2.2 Order

2.2.1 SO123-IN-1, Inservice Inspection Program

2.3 Procedures

2.3.1 SO23-V-5.15, Inservice Testing (IST) Coordination and Trending

2.3.2 SO123-VI-1.0.3, Methods of Handling Invalid Steps/Sections of a Procedure

2.3.3 SO123-XV-5, Nonconforming Material, Parts, or Components

2.3.4 SO123-V-3.1, Vibration Monitoring and Analysis

2.3.5 SO123-XXI-1.11.11, Engineering Training Program Description

2.3.6 SO123-XXIV-10.9, Design Process Flow and Controls SONGS Units 1, 2 and 3

2.3.7 SO123-XXIV-10.16, Development, Review, Approval and Release of Conceptual Engineering Packages (CEPs) and Design Change Packages (DCPs) SONGS 1, 2 and 3

2.3.8 SO23-II-9.422, Controlotron Series 480 and System 990 Clamp-on Flowmeter Calibration

2.3.9 SO123-II-8.10.1, Instrumentation and Control Loop Verification

2.3.10 SO123-XV-50.39, Cause Evaluation Standards, Methods, and Instructions

2.3.11 SO123-XXIV-10.1, Preparation Review, Approval, Issuance, Implementation and Closure of Engineering Change Packages (ECPs) and Engineering Change Notices (ECNs)

2.3.12 SO123-XV-1, Calibration and Control of Measure and Test Equipment

2.4 Operating Instructions

2.4.1 SO123-O-A4, Configuration Control

2.4.2 Surveillance Operating Instructions SO23-3-3.60.x, *[series]* Operation Pump IST Procedures

2.5 Other

2.5.1 Inservice Testing Topical Report, *Design Bases Document*, DBD-SO23-TR-IS3

2.5.2 Letter, J. G. Partlow, NRC, to All Licensees, etc, Minutes of the Public meetings on Generic Letter 89-04, October 25, 1989.

2.5.3 Memo, P. Croy to Cognizant Supervisors and Cognizant Engineers, Vibration Velocity Measurement and Evaluations During Inservice Testing of Pumps, February 3, 1992

2.5.4 EG(123) 53, Inservice Pump Test Record

2.5.5 Letter, W. C. Marsh to USNRC, ASME Code Update for the Second Ten-Year Interval, Inservice Testing Program, August 17, 1993

2.5.6 Total Loop Uncertainty Calculation J-EPA-002

2.5.7 Letter, W. C. Marsh to USNRC, Inservice Testing Program, Pump Relief Requests Nos. 13 and 14, November 22, 1995

2.5.8 Memorandum for File by P. Schofield, Inservice Testing (IST) Program Analog/Digital Instrumentation, August 30, 1994

2.5.9 Roles and Responsibilities of System and Maintenance Engineers

2.5.10 NRC Memo To File, Joseph Colaccino, Mechanical Engineering Branch NRR, Subject: Summary of Public Workshops Held in NRC Regions on Inspection Procedure 73756," Inservice Testing of Pumps and Valves," and Answers to Panel Questions on Inservice Testing. July 18, 1997

2.5.11 Reg Guide 1.26, Quality Group Classifications and Standards for Water-, Steam-, and Radioactive-Waste-Containing Component

2.5.12 ODM-1 Operations Dictionary

2.5.13 Topical Quality Assurance Manual (TQAM), Chapter 7-A, ASME Code Program Scope, Responsibilities and Program Controls

2.5.14 Performance Monitoring Data System (PMDS) Desktop Instructions

3.0 PREREQUISITES

NOTE: Reference to NDMS with a PC is the preferred method to verify which version of the Procedure and any associated changes are current.

CAUTION CDM-SONGS Controlled copies are updated as soon as their resources permit; however, this might sometimes mean that controlled copies in the Division Library, for example, are several days late getting updated, which is not the case with NDMS.

3.1 Before using this document, verify the revision and any issued TCNs and/or ECs (Editorial Corrections) are current by using one of the following methods:

3.1.1 Access the Nuclear Document Management System (NDMS) (preferred method).

3.1.2 Check it against a Corporate Documentation Management-SONGS (CDM-SONGS) controlled copy and any issued TCNs/ECs.

3.1.3 Contact CDM-SONGS by telephone or through counter inquiry.

3.1.4 Obtain a user-controlled copy of this procedure from CDM-SONGS or NDMS.

3.2 Verify level of use requirements on the first page of the document.

3.3 Instrumentation used for Inservice Testing shall meet the requirements of ASME Code, ISTB-3500. See Section 6.5.6 for instrumentation criteria.

3.3.1 Prior to commencing an Inservice Test, the individual conducting the test should ensure required instrumentation, both installed plant instrumentation and Measuring and Test Equipment, is available, calibrated and the calibration date is not expired.

NOTES:

(1) The Maintenance Division procedures allow a 25% calibration interval extension to be applied to the calibration due date. Where instruments used for IST are in this "25% grace period" these instruments are acceptable for IST.

(2) Verification that range and accuracy requirements are met is necessary for each new instrument or loop (CFMS, temporary instruments, etc.) used if not done and documented previously.

3.3.2 The individual conducting the test shall verify instrumentation meets the range and accuracy requirements of ASME ISTB-3500, and Pump Relief Requests (see Attachment 4). See Paragraph 6.5.6 for instrumentation criteria.

3.4 Implementing procedures for pump Inservice Testing (see Reference 2.4.2) shall be updated to reflect changes in this program procedure as soon as feasible. In any case, implementing organizations are responsible for ensuring Inservice Testing is completed in accordance with the up-to-date program.

3.4.1 The IST Coordinator shall provide copies of changes to the Inservice Testing program promptly when issued to the appropriate Operations Division supervision. These copies shall serve as notification of program changes.

3.5 IST Coordinator shall be PQS ENGIST qualified.

3.6 Engineers performing IST activities shall be T3EN16 qualified.

4.0 PRECAUTIONS

4.1 Testing required in this program procedure shall not be conducted in Modes or under circumstances that place the Plant in an unsafe condition. Likewise, care shall be exercised that no test will be conducted so a failure of the test would put the plant in an unsafe condition.

4.2 Special care is required to be exercised to ensure the allowed interval is not exceeded. The specified frequency is met if the surveillance is performed within 1.25 times the interval specified for each pump. Per the NRC Workshop Summary (reference 2.5.10), this is ONLY true if the specified frequency is stated in the Technical Specifications, otherwise a Relief Request would be required. (See Technical Specification Surveillance SR 3.0.2 and LCS 5.0.103.2.6).

5.0 CHECKLIST(S)

5.1 None

6.0 PROCEDURE

6.1 Scope

6.1.1 The pumps covered in this program are those provided with an emergency power source which are required in shutting down a reactor to the cold shutdown condition, maintaining the cold shutdown condition, or in mitigating the consequences of an accident. [ISTA-1100, ISTB-1100]

6.1.2 Components subject to the Inservice Testing Program for Pumps in accordance with ISTA, ISTB, and DBD-SO23-TR-IS3 are identified in Attachment 2.

.1 Attachment 2 also identifies the parameters to be measured for each pump and the test frequency (additional information is provided by means of notes in Attachment 2).

.2 Testing shall also comply with Relief Requests (RRs) provided in Attachment 4 when they are approved by the NRC.

6.1.3 This Procedure may include the testing of components in addition to those listed in accordance with DBD-SO23-TR-IS3 and ASME OM Code (ISTA-1100, ISTB-1100); but shall, as a minimum, require testing of at least all of the components (meeting the above scope description) in those references.

6.1.4 SONGS' strategy for determining the pump IST program scope and implementation of the recommendation of the NRC in NRC GL 89-04, Attachment 1, Position 11, includes planned and systematic reviews of design changes by Design Engineering with a backup review by the IST Coordinator, in accordance with Design Engineering procedures.

.1 Additional information and criteria used for determining IST Program scope are included in NRC GL 89-04, DBD-SO23-TR-IS3, Regulatory Guide 1.26 and Reference 2.5.2. Judgment and prudence are applied when reference criteria are not directly applicable.

6.1.5 Exclusions

.1 The following are excluded from the scope of this Program: [ISTB-1200]

.1.1 drivers, except where the pump and driver form an integral unit and the pump bearings are in the driver;

.1.2 pumps supplied with emergency power solely for operating convenience;

.1.3 skid mounted pumps that are tested as part of the major component and are justified by the Owner to be adequately tested.

6.1.6 The Inservice Testing of Pumps Program delineated herein covers a ten (10) year interval commencing on May 1, 2004, and terminating on August 17, 2013.

6.2 Terminology

NOTE: Terms defined in this section correspond to ISTA-2000 and ISTB-2000. The consistency with this Reference provides a common basis for understanding among ourselves, as the owner, the ASME documents with which we must comply and the individuals who audit our program, such as the NRC, ANII, etc.

6.2.1 *Comprehensive Pump Test* - Precision pump test performed biannually within +/- 20% of the pump design flow rate. This test has tighter acceptance criteria bands for pressure, differential pressure and flow. Also requires the use of higher accuracy pressure or differential pressure gauges (+/- ½%) than used for Group A or B testing.

6.2.2 *Group A Pumps* - pumps that are operated continuously or routinely during normal operation, cold shutdown, or refueling operations.

6.2.3 *Group B Pumps* - pumps in standby systems that are not operated routinely except for testing.

6.2.4 *Inservice Test* - a test to determine the operational readiness of a component.

6.2.5 *Instrument Accuracy* - the allowable inaccuracy of an instrument loop based on the square root of the sum of the squares of the inaccuracies of each instrument or component in the loop when considered separately. Alternatively, the allowable instrument and accuracy of the instrument loop may be based on the output for a known input into the instrument loop.

6.2.6 *Instrument Loop* - two or more instruments or components working together to provide a single output (e.g., a vibration probe and its associated signal conditioning and readout devices).

6.2.7 *Monitoring* - continuous or periodic observation or measurement to ascertain the performance or obtain characteristics of a system, structure, or component.

6.2.8 *Operational readiness* - the ability of a component to perform its intended function.

6.2.9 *Preservice Test* - a test whose results are used to establish reference values for future in-service tests.

6.2.10 *Preservice test period* - the period of time following completion of construction activities related to the pump, and before first electrical generation by nuclear heat, or in an operating plant, before the component is placed in service.

6.2.11 *Pump* - a mechanical device used to move liquid.

6.2.12 *Reference point* - a point of operation at which reference values are established and inservice test parameters are measured for comparison with applicable acceptance criteria.

6.2.13 *Reference Values* - one or more values of test parameters measured or determined when the equipment is known to be operating acceptably.

6.2.14 *Routine Servicing* - the performance of planned, preventive maintenance (e.g., replacing or adjusting valves in a reciprocating pumps, changing oil, flushing the cooling system, adjusting packing, adding packing rings or mechanical seal maintenance or replacement).

6.2.15 *Skid Mounted* - Pumps integral to or that support operation of major components, even though these pumps may not be located directly on the skid. In general, these pumps are supplied by the manufacturer of the major component.

6.2.16 *SRO Operations Supervisor* - Any Operations individual holding an SRO license (active or inactive) who has qualified to the position of Shift Manager or Control Room Supervisor [See ODM-1, Operations Dictionary].

6.2.17 *System Resistance* - the hydraulic resistance to flow in a system.

6.2.18 *Test Interval* - The test intervals for the IST program are defined in LCS 5.0.103.2.6.

6.2.19 *Trending* - a comparison of current data to previous data obtained under similar conditions for the same equipment.

6.2.20 *Vertical Line Shaft Pump* - A vertically suspended pump where the pump driver and pump are connected by a line shaft within an enclosed column.

6.3 Responsibilities for the Program

6.3.1 In accordance with SO123-IN-1, the Manager, Maintenance Engineering, is responsible for this program and its implementation at the San Onofre Site.

6.3.2 Design Engineering (DE) is responsible for scope determination of the Inservice Testing Program for pumps and valves. DE documents their methodology for performing this determination and the results of their analyses in their document 90055 (Reference 2.1.6).

6.3.3 Operations Division (Operators) performs the data collection and initial evaluation.

6.4 Design Requirements

6.4.1 Owner's Responsibility

.1 Design changes shall include in both the pump and plant design all necessary valves, instrumentation test loop, required fluid inventory, or other provisions which are required to fully comply with the rules of this program procedure. [ISTB-1400(a)]

.2 Each pump to be tested in accordance with the rules of this program procedure is identified in Attachment 2. [ISTB-1400(b)and ISTB-9000]

6.4.2 Bypass Loops

.1 Bypass test loops (sometimes called miniflow lines or miniflow recirculation lines) are used on certain pump tests identified in the program implementing procedure, see Attachment 2.

.2 A bypass test loop may be used for a group A test or comprehensive test, provided the flow rate through the loop meets the requirements as specified in ISTB-3300. [ISTB-5100(b), ISTB-5200(b), ISTB-5300(b)]

.3 A bypass test loop may be used for group B tests if it is designed to meet the pump manufacturer's operating specifications (e.g., flow rate, time limitations) for minimum flow operation. [ISTB-5100(b), ISTB-5200(b), ISTB-5300(b)]

6.5 Test Requirements

NOTE: Since this is the third IST interval (third 120 months), preservice testing applies to newly added design changes.

6.5.1 Preservice Testing:

.1 Each pump shall be tested during the preservice test period.

.2 This testing shall be conducted under conditions as near as practicable to those expected during subsequent inservice testing. [ISTB-3100]

.3 Only one preservice test of each pump is required, except that the requirements of 6.5.4, shall be met. [ISTB-3100]

6.5.2 Inservice Testing:

.1 Inservice Testing in accordance with this program procedure shall commence when the pump(s) is required to be operable. [ISTB-3200]

6.5.3 Reference Values:

NOTE: Detection of Change: The hydraulic and mechanical condition of a pump relative to a previous condition may be determined by attempting to duplicate by test a set of reference values. Deviations detected are symptoms of changes and, depending upon the degree of deviation, indicate need for further tests or corrective action. [ISTB-3000]

.1 Shall be at points of operation readily duplicated during subsequent tests. [ISTB-3300(d)]

.1.1 All subsequent test results shall be compared to these initial reference values or to new reference values established in accordance with 6.5.4, see Attachment 7, or 6.5.5. [ISTB-3300(f)]

.1.2 The parameters to be measured during preservice and inservice testing are specified in Attachment 1, Table 1. [Table ISTB-3000-1]

.2 Shall only be established when the pump is known to be operating acceptably. [ISTB-3300(c)]

.2.1 If the particular parameter being measured or determined can be significantly influenced by other related conditions, then these conditions shall be analyzed and documented in the reference test record. [ISTB-3300(g), ISTB-6400]

.2.2 Shall be established:

.2.2.1 In a region(s) of relatively stable pump flow. [ISTB-3300(e)]

NOTE: The reference point should be established within 20% of the design value, meaning the best efficiency point when practicable. The reference value will be established within 20% of the design value, meaning the safety analysis value when unable to use the best efficiency point.

.2.2.2 Within +/-20% of pump design flow rate for the comprehensive test. [ISTB-3300(e)(1)]

6.5.3.2.2.3 Within +/-20% of pump design flow for the group A and group B tests, if practicable. If not practicable, the reference point flow rate shall be established at the highest practical flow rate. [ISTB-3300(e)(2)]

.3 To document the new reference in the PMDS software program, use the "Comments" field during the upload section of the test.

NOTE: Vibration measurements of pumps may be foundation, driver, and piping dependent. Therefore, if initial vibration readings are high and have no obvious relationship to the pump, then vibration measurements should be taken at the driver, at the foundation, and on the piping, and analyzed to ensure the reference vibration measurements are representative of the pump and the measured vibration levels do not prevent the pump from fulfilling its function. [ISTB-6400]

.4 If the reference test is performed using a Surveillance Operating Instruction, then the appropriate Engineer and supervisor shall:

.4.1 Complete Attachment 5, "Documentation of New Reference", and

.4.2 Attach Attachment 5 as part of the reference test record. [ISTB-3310, ISTB-3320 and ISTB-9000]

6.5.4 Effect of Pump Replacement, Repair, and Maintenance on Reference Values

.1 When a reference value or set of values may have been affected by repair, replacement, or routine servicing of a pump, a new reference value or set of values shall be determined or the previous value reconfirmed by a comprehensive or group A test run prior to declaring the pump operable. [ISTB-3310]

.2 Deviations between the previous and new set of reference values shall be identified.

.3 Whenever an additional set of reference values is established, the reasons for doing so shall be justified and documented on Attachment 5. [ISTB-3320]

.4 The individual conducting the test shall verify the new values represent acceptable pump operation and shall document same in the IST files for that pump. [ISTB-3310]

6.5.5 To Establish an Additional Set of Reference Values:

.1 If it is necessary or desirable for some reason other than stated above to establish an additional set of reference values, a group A or comprehensive test shall be run at the conditions of an existing set of reference values and the results analyzed. If operation is acceptable per ISTB-6200, an additional set of reference values may be established as follows:

.1.1 For centrifugal and vertical line shaft pumps, the additional set of reference values shall be determined from the pump curve established in ISTB-5110 or ISTB-5210, as applicable. Vibration acceptance criteria shall be established by a group A or comprehensive test at the new reference point. If vibration data was taken at all points used in determining the pump curve, an interpolation of the new vibration reference value is acceptable.

.2 For positive displacement pumps, the additional set of reference values shall be established per ISTB-5310.

.3 A test shall be run to verify the new reference values before their implementation. Whenever an additional set of reference values is established, the reasons for so doing shall be justified and documented in the record of tests (see ISTB-9000). The requirements of Step 6.5.3 apply.

NOTE: If an additional set of Reference values is being established under this section, the pump's previous quarterly test (when the pump was known to be operating satisfactorily) may be used as the first pair of tests to establish a new reference <u>if</u> the individual provides an analysis showing the pump performance trends indicate continued satisfactory pump condition.

.4 Paragraphs 6.5.4.2, 6.5.4.3, and 6.5.4.4 of this procedure apply. [ISTB-3320]

6.5.6 Instrumentation

.1 Accuracy:

NOTE: Instrument accuracy: the allowable inaccuracy of an instrument loop based on the square root of the sum of the squares of the inaccuracies of each instrument or component in the loop when considered separately. Alternatively, the allowable instrument and accuracy of the instrument loop may be based on the output for a known input into the instrument loop.

.1.1 Instrument accuracy shall be within the following limits, unless exempted per a Relief Request. If a parameter is determined by analytical methods instead of measurement, then the determination shall meet the parameter accuracy requirement stated below (e.g., flow rate determination shall be accurate to within +/-2% of actual).

- For individual analog instruments, the required accuracy is percent of full-scale.
- For digital instruments, the required accuracy is over the calibrated range.
- For a combination of instruments, the required accuracy is loop accuracy. [ISTB-3510]

Quantity	Group A and Group B Test	Comprehensive and Preservice Tests
Pressure	+/-2 %	+/- ½ %
Flow rate	+/-2 %	+/- 2 %
Speed	+/-2 %	+/- 2 %
Vibration	+/-5 %	+/- 5 %
Differential Pressure	+/-2 %	+/- ½ %

NOTE: Station instruments meeting the above requirements are acceptable. [Table ISTB-3500-1]

6.5.6.2 Range:

NOTES: (1) Vibration instruments are excluded from the following two range requirements. [ISTB-3510(b)]

(2) A discussion of analog/digital instrumentation is provided in Reference 2.5.8.

.2.1 The full-scale range of each analog instrument shall be not greater than three times the reference value. [ISTB-3510(b)(1)]

.2.2 Digital instruments shall be selected such that the reference value shall not exceed 70 % of the calibrated range of the instrument. [ISTB-3510(b)(2)]

.3 Location:

NOTE: The location of test points for individual pumps are shown in the individual implementing procedures (Reference 2.4.2).

.3.1 The sensor location shall be established by the Owner, documented in the individual pump Test Implementing Procedures, and shall be appropriate for the parameter being measured. [ISTB-3510(c) and ISTB-9000]

.3.2 The same sensor location shall be used for subsequent tests.

.3.3 Position sensitive instruments shall be either permanently mounted or provision shall be made to duplicate their position during each test (see individual pump Test Implementing Procedures). [ISTB-3510(c)]

.4 Calibration:

.4.1 Instruments and instrument loops shall be calibrated in accordance with SO123-XV-1. [Responsibility: Maintenance Division]

.4.2 New or repaired instruments shall be calibrated prior to use in accordance with SO123-XV-1 in an inservice test. [ISTB-3510(d)]

6.5.6.5 Fluctuations:

.5.1 Symmetrical damping devices or averaging techniques may be used to reduce instrument fluctuations. Hydraulic instruments may be damped by using gauge snubbers or by throttling small valves in instrument lines. [ISTB-3510(e)]

.6 Frequency Response Range:

.6.1 The frequency response range of the vibration measuring transducers and their readout system shall be from one-third minimum pump shaft rotational speed to at least 1000 Hz. [ISTB-3510(f)]

6.5.7 Pressure Measurements

.1 Gage Lines:

.1.1 If the presence or absence of liquid in a gauge line could produce a difference of more than 0.25 % in the indicated value of the measured pressure, means shall be provided to assure or determine the presence or absence of liquid as required for the static correction used. [ISTB-3520(a)]

.2 Differential Pressure:

.2.1 When determining differential pressure across a pump, a differential pressure gauge, or a differential pressure transmitter that provides direct measurement of pressure difference, or the difference between the pressure at a point in the inlet pipe and the pressure at the point in the discharge pipe, may be used. [ISTB-3520(b)]

6.5.8 Rotational Speed Measurements:

.1 Rotational speed measurements of variable speed pumps shall be taken by a method that meets the requirements of Paragraph 6.5.6 and Attachment 1. [ISTB-3530]

6.5.9 Vibration Measurements

NOTES: (1) All of the San Onofre Pumps in the Inservice Testing Program fall into three groups:

1. *Centrifugal* — All pumps except those identified below.
2. *Reciprocating* — Charging Pumps S2(3)1208MP190, 191 and 192.
3. *Vertical Line Shaft* — Salt Water Cooling Pumps: S2(3)1413MP112, 113, 114, and 307; Diesel Generator Fuel Oil Transfer Pumps: S2(3)2421MP093, 094, 095, and 096.

(2) If a portable vibration indicator is used, the reference points must be clearly identified on the pump to permit subsequent duplication in both location and plane. [ISTB-3540(d)]

(3) The location of test points for individual pumps are shown in the individual implementing procedures (Reference 2.4.2).

(4) Test pads may be installed/replaced by Engineers, Operators, or Maintenance personnel, providing the person performing the installation follows the directions given in SO123-V-3.1, SO23-3-3.60, or an approved Maintenance Order.

(5) See Attachment 1 for Acceptance Ranges for Vibration Parameters.

.1 Measurements on Centrifugal Pumps:

.1.1 Shall be taken in a plane approximately perpendicular to the rotating shaft in two approximately orthogonal directions on each accessible pump bearing housing.

.1.2 Shall be taken in the axial direction on each accessible pump thrust bearing housing. [ISTB-3540(a)]

6.5.9.2 Measurement on Reciprocating Pumps:

.2.1 Shall be on the bearing housing of the crankshaft, approximately perpendicular to both the crankshaft and the line of plunger travel. [ISTB-3540(c)]

.3 Measurement on Vertical Line Shaft Pumps:

.3.1 Shall be taken on the upper motor bearing housing in three approximately orthogonal directions, one of which is the axial direction. [ISTB-3540(b)]

6.5.10 Flow Rate Measurement:

.1 When measuring flow rate, use a rate or quantity meter installed in the pump test circuit. [OMb-ISTB-3550]

.2 If a meter does not indicate the flow rate directly, the pump test record shall include the method used to reduce the data. [OMb-ISTB-3550]

.3 Internal recirculated flow is not required to be measured. [OMb-ISTB-3550]

.4 External recirculated flow is not required to be measured if it is not practical to isolate, has a fixed resistance, and has been evaluated to not have a substantial effect on the results of the test. [OMb-ISTB-3550]

Remainder of page left blank.

6.6 Testing Methods

6.6.1 Frequency of Inservice Tests:

.1 An inservice test shall be run on each pump, as specified below:

PUMP GROUP	GROUP A TEST	GROUP B TEST	COMPREHENSIVE TEST
Group A	Quarterly	N/A	Biennially
Group B	N/A	Quarterly	Biennially

NOTE: See Attachment 2 for details of pump testing frequency. [Table ISTB-3400-1]

.1.1 Group A pumps that are operated more frequently than every 3 months need not be run or stopped for a special test provided the plant records show the pump was operated at least once very 3 months at the reference conditions, and the quantities specified were determined, recorded, and analyzed per section 6.8. [ISTB-3410]

.1.2 Pumps that can only be tested during plant operation shall be tested at the next available opportunity. [ISTB-3420]

Remainder of page left blank.

6.6.1.2 The following pumps require response time be measured every 24 months:

NOTES: (1) Response time testing is included in the IST program as a matter of convenience. This measurement is part of the individual implementing procedures for affected pumps (Reference 2.4.2).

- Auxiliary Feedwater Pumps S2(3)1305MP140, MP141 and MP504;
- Component Cooling Water Pumps S2(3)1203MP024, S2(3)1203MP025 and S2(3)1203MP026;
- High Pressure Safety Injection Pumps S2(3)1204MP017, S2(3)1204MP018 and S2(3)1204MP019;
- Low Pressure Safety Injection Pumps S2(3)1204MP015 and S2(3)1204MP016;
- Containment Spray Pumps S2(3)1206MP012 and S2(3)1206MP013;
- Salt Water Cooling Pumps S2(3)1413MP112, S2(3)1413MP113, S2(3)1413MP114 and S2(3)1413MP307
- Reactor Charging Pumps S2(3)1208MP190, S2(3)1208MP191 and S2(3)1208MP192.

(2) Operability of a redundant pump must often be assured prior to testing the second pump. It is suggested testing be done on a staggered basis, where possible. Ensure compliance with Technical Specification LCO 3.0.6 and Technical Specification 5.6.

6.6.2 Test Control

.1 Control, direction and scheduling of the Test shall be the responsibility of the individual conducting the test.

.2 Operator responsibilities, including independent verification, are addressed in the individual pump IST implementing procedures, Reference 2.4.2.

6.6.3 Test Preparation

.1 Use the PMDS data collectors or equivalent (see reference 2.5.14).

.1.1 The alternate method of obtaining measurements is to use an IRD instrument or equivalent with a hard copy of EG(123) 53, "Inservice Pump Test Record." An example of this form and its related keypoints are provided in Attachment 3.

.2 Perform a pretest walkdown during which the individual:

NOTE: A "pre-test" is **NOT** allowed.

.2.1 Walks down the system and component alignment to the extent necessary to ensure the test flow path is as required to begin the test described herein and instrumentation is ready,

.2.2 Reviews the last test,

.2.3 If applicable, then performs a cross-comparison of instrumentation as a rough validation of calibration.

6.6.4 Conduct Inservice Testing as follows:

NOTES:

(1) This section defines requirements for Group A, Group B, and Comprehensive tests. [ISTB-5000]

(2) When a Group A test is required, a Comprehensive test may be substituted.

(3) When a Group B test is required, a Group A or Comprehensive test may be substituted. A preservice test may be substituted for any inservice test.

.1 Duration of Tests:

.1.1 For the Group A test and the Comprehensive test, after pump conditions are as stable as the system permits, each pump shall be run at least 2 minutes. At the end of this time at least one measurement or determination of each of the test parameter(s) required by Attachment 1, Table 1, shall be made and recorded. [Table ISTB-3000-1]

6.6.4.1.2 For the Group B test, after pump conditions are stable, at least one measurement or determination of the test parameter(s) required by Attachment 1, Table 1, shall be made and recorded. [Table ISTB-3000-1]

.2 Bypass Loops:

.2.1 A bypass test loop may be used for a Group A test or Comprehensive test, provided the flow rate through the loop meets the requirements as specified in ISTB-3300.

.2.2 A bypass test loop may be used for Group B tests if it is designed to meet the pump manufacturer's operating specifications (e.g., flow rate, time limitations) for minimum flow operation.

.3 Preservice Testing:

NOTE: The parameters to be measured are specified in Attachment 1, Table 1. [Table ISTB-3000-1]

.3.1 For centrifugal and vertical line shaft centrifugal pumps in systems where resistance can be varied, flow rate and differential pressure shall be measured at a minimum of 5 points.

.3.1.1 If practicable, these points shall be from pump minimum flow to at least pump design flow.

NOTE: A pump curve need not be established for pumps in systems where resistance cannot be varied.

.3.1.2 A pump curve shall be established based on the measured points. At least one point shall be designated as the reference point(s). Data taken at the reference point will be used to compare the results of inservice tests.

.3.2 For reciprocating positive displacement pumps, reference values shall be taken at or near pump design pressure for the parameters specified in Attachment 1, Table 1. [Table ISTB-3000-1]

.3.3 Vibration measurements are only required to be taken at the reference point(s).

6.6.4.4 Group A and Comprehensive tests shall be conducted with the pump operating at a specified reference point. The test parameters shown in Attachment 1, Table 1 (Table ISTB-3000-1) shall be determined and recorded as required by this paragraph.

.4.1 For centrifugal and vertical line shaft centrifugal pumps, the test shall be conducted as follows:

.4.1.1 The pump shall be operated at nominal motor speed for constant speed drives or at a speed adjusted to the reference point (+/-1%) for variable speed drives.

.4.1.2 The resistance of the system shall be varied until the flow rate equals the reference point. The differential pressure shall then be determined and compared to its reference value.

.4.1.2.1 Alternatively, the flow rate shall be varied until the differential pressure equals the reference point and the flow rate determined and compared to the reference flow rate value.

.4.1.3 Where it is not practical to vary system resistance, flow rate and pressure shall be determined and compared to their respective reference values.

.4.1.4 Vibration (displacement or velocity) shall be determined and compared with the reference value. Vibration measurements shall be broadband (unfiltered).

.4.1.4.1 If velocity measurements are used, they shall be peak.

.4.1.4.2 If displacement amplitudes are used, they shall be peak-to-peak.

.4.1.5 All deviations from the reference values shall be compared with the ranges of Attachment 1, RANGES FOR TEST PARAMETERS and Attachment 6, MINIMUM PUMP PERFORMANCE TO ACHIEVE SAFETY ANALYSIS COMPLIANCE.

.4.1.5.1 Vibration measurements shall be compared to both the relative and absolute criteria shown in the alert and required action ranges of Attachment 1, Table 2 or Table 3 (Table ISTB-5100-1 or ISTB-5200-1 as applicable). For example, if vibration exceeds either 6 V_r or 0.7 in./sec (1.7 cm/sec) the pump is in the required action range.

NOTES: *(1) Corrective action is taken as specified in Section 6.8, below. [ISTB-6200, Table ISTB-5100-1, ISTB-5200-1]

(2) During a test, anomalous data with no clear indication of the cause must be attributed to the pump under test. For this occurrence, a prompt determination of operability is appropriate with follow-on corrective action as necessary. However, if a test shows measured parameter values that fall outside of the acceptable range of Attachment 1's Table 2 or Table 3 (Table ISTB-5100-1, or Table ISTB-5200-1 as applicable) that have resulted from an identified systematic error, such as improper system lineup or inaccurate instrumentation, the test shall be rerun after correcting the error. Under such conditions, this does not constitute preconditioning of the pump under test. [See GL 91-18, ISTB-6300]

CAUTION *Recalibrating test instruments and then repeating pump tests is an acceptable alternative to the corrective action of repair or replacement, but is not an action that can be taken before declaring the pump or valve inoperable.*

6.6.4.4.2 For reciprocating positive displacement pumps, the test shall be conducted as follows:

.4.2.1 The pump shall be operated at nominal motor speed for constant speed drives or at a speed adjusted to the reference point (+/-1%) for variable speed drives.

.4.2.2 The resistance of the system shall be varied until the discharge pressure equals the reference point. The flow rate shall then be determined and compared to its reference value.

.4.2.3 Where system resistance cannot be varied, flow rate and pressure shall be determined and compared to their respective reference values.

.4.2.4 Vibration (displacement or velocity) shall be determined and compared with the reference value. Vibration measurements shall be broadband (unfiltered).

6.6.4.4.2.4.1 If velocity measurements are used, they shall be peak.

.4.2.4.2 If displacement amplitudes are used, they shall be peak-to-peak.

.4.2.5 All deviations from the reference values shall be compared with the ranges of Attachment 1, RANGES FOR TEST PARAMETERS and Attachment 6, MINIMUM PUMP PERFORMANCE TO ACHIEVE SAFETY ANALYSIS COMPLIANCE.

.4.2.5.1 For reciprocating positive displacement pumps, vibration measurements shall be compared to the relative criteria shown in the alert and required action ranges of Attachment 1, Table 4 (Table ISTB-5300-2). For example, if vibration exceeds 6 V_r, the pump is in the required action range.

NOTES:

(1) Corrective action is taken as specified in Section 6.8. [ISTB-6200, Table ISTB-5300-2]

(2) During a test, anomalous data with no clear indication of the cause must be attributed to the pump under test. For this occurrence, a prompt determination of operability is appropriate with follow-on corrective action as necessary. However, if a test shows measured parameter values that fall outside of the acceptable range of Attachment 1, Table 4 (Table 5300-2), that have resulted from an identified systematic error, such as improper system lineup or inaccurate instrumentation, the test shall be rerun after correcting the error. Under such conditions, this does not constitute preconditioning of the pump under test. [See GL 91-18, ISTB-6300]

CAUTION *Recalibrating test instruments and then repeating pump tests is an acceptable alternative to the corrective action of repair or replacement, but is not an action that can be taken before declaring the pump or valve inoperable.*

6.6.4.5 Group B tests shall be conducted with the pump operating at a specified reference point. The test parameter value identified in Attachment 1, Table 1 (Table ISTB-3000-1) shall be determined and recorded as required by this paragraph. The test shall be conducted as follows:

.5.1 The pump shall be operated at nominal motor speed for constant speed drives or at a speed adjusted to the reference point (+/-1%) for variable speed drives.

.5.2 For centrifugal and vertical line shaft centrifugal pumps, the differential pressure or flow rate shall be determined and compared to its reference value. [ISTB-5222(b)]

.5.3 For reciprocating positive displacement pumps, the flow rate shall be determined and compared to its reference value. [ISTB-5322(b)]

.5.4 System resistance may be varied as necessary to achieve the reference point.

.5.5 Vibration (displacement or velocity) shall be determined and compared with the reference value. Vibration measurements shall be broadband (unfiltered).

.5.5.1 If velocity measurements are used, they shall be peak.

.5.5.2 If displacement amplitudes are used, they shall be peak-to-peak.

.5.6 All deviations from the reference values shall be compared with the ranges of Attachment 1, RANGES FOR TEST PARAMETERS and Attachment 6, MINIMUM PUMP PERFORMANCE TO ACHIEVE SAFETY ANALYSIS COMPLIANCE.

NOTES: (1) Corrective action is taken as specified in Section 6.8, below. [ISTB-6200, Table ISTB-5100-1, ISTB-5200-1, Table ISTB-5300-2]

(2) During a test, anomalous data with no clear indication of the cause must be attributed to the pump under test. For this occurrence, a prompt determination of operability is appropriate with follow-on corrective action as necessary. However, if a test shows measured parameter values that fall outside of the acceptable range of Attachment 1's, Table 2, Table 3, or Table 4 (Table ISTB-5100-1, Table ISTB-5200-1, or Table ISTB-5300-2, as applicable) as applicable, that have resulted from an identified systematic error, such as improper system lineup or inaccurate instrumentation, the test shall be rerun after correcting the error. Under such conditions, this does not constitute preconditioning of the pump under test. [See GL 91-18, ISTB-6300]

CAUTION *Recalibrating test instruments and then repeating pump tests is an acceptable alternative to the corrective action of repair or replacement, but is not an action that can be taken before declaring the pump or valve inoperable.*

6.6.5 Pumps in Systems Out of Service:

.1 For a pump in a system declared inoperable or not required to be operable, the test schedule need not be followed. [ISTB-3420]

NOTE: Maintaining the test interval is recommended as this facilitates scheduling the testing on a staggered basis as previously addressed.

.2 If not tested during plant shutdowns, the pump shall be tested prior to entering the Mode in which it is required to perform a safety function. Within 3 months prior to placing the system in an operable status, the pump shall be tested and the test schedule followed in accordance with the requirements of this program procedure. [ISTB-3420]

.3 Pumps which can only be tested during plant operation shall be tested within 1 week following plant startup. [ISTB-3420]

6.6.6 Allowable Changes

.1 The individual conducting the test and the SRO Operations Supervisor, or designee, shall be responsible for ensuring exceptions and/or changes do NOT invalidate the test or violate the Technical Specifications and other operational constraints.

.2 Provided the changes are documented and approved by Operations using procedures such as SO123-O-A4, the following changes may be made:

- changes in the pump test alignment described in the individual pump test procedures;
- changes in the pump test instrumentation;
- changes in the "As Left" valve alignment following the test.

6.7 Inservice Pump Test Method

NOTES:

(1) The requirements to initiate an AR or NCR apply to the IST Program. See SO123-XX-1 or SO123-XV-5 for initiation criteria.

(2) The PMDS software program is used together with Data Collector that is used to obtain and analyze IST Data. PMDS prints out (upon request) a hard copy Inservice Pump Test Record for documentation. Additional data collected is processed by PMDS for tracking and trending information only. Additional information is available in "Performance Monitoring Data System (PMDS) Desktop Instructions" located on Maintenance Engineering - Reliability Engineering's website.

(3) For routine pump tests, the ISTB requirement that all test data shall be analyzed after completion of a test is considered to be satisfied when either Maintenance Engineering supervisory approval is received, or when the Operations' procedures are signed by the Operations supervisor.

6.7.1 Maintenance Engineering should provide engineer and supervisory review and approval to meet ISTB requirements.

.1 Any time an IST is required to return a pump to Operable status, Maintenance Engineering supervisory approval is required before the pump can be declared Operable.

6.7.1.2 Approval in the PMDS program is satisfactory to meet Operability requirements, with follow-up notification per Attachment 7.

6.7.2 The Inservice Pump Test Record (Attachment 3) shall be completed by the individual conducting the test.

.1 Other documentation required to be completed is identified in the individual Pump Test Procedures, Reference 2.4.2.

6.7.3 If the preferred method of data collection is available, refer to step 6.6.3.1, otherwise, complete the Inservice Pump Test Record using available instrumentation in accordance with the Key Points listed on Attachment 3 and SO123-VI-1.0.3.

6.7.4 When pump inservice tests are conducted by Operations using Reference 2.4.2, "Surveillance Operating Instructions SO23-3-3.60, *[series]* Operation Pump IST Procedures," then Attachment 7, "Engineering Review of Pump Inservice Test," shall also be completed.

.1 Operations is requested to notify Maintenance Engineers or appropriate supervision when the testing is completed and the results are in the PMDS database.

6.8 Analysis and Evaluation

6.8.1 When evaluating pump performance, verify the pump meets the minimum requirements of the Safety Analyses as discussed in Attachment 6 of this procedure and related references discussed therein.

6.8.2 Acceptance Ranges

.1 The ranges of test quantities for each pump tested shall be specified in the Inservice Pump Test Record used for the test. See Attachment 3 or equivalent.

.2 The allowable ranges of inservice test quantities which are based on reference values are shown on Attachment 1.

.2.1 Table 2, Centrifugal Pump Test Acceptance Criteria, Table ISTB-5100-1;

.2.2 Table 3, Vertical Line Shaft Centrifugal Pump Test Acceptance Criteria, Table ISTB-5200-1;

.2.3 Table 4, Reciprocating Positive Displacement Pump Test Acceptance Criteria, Table ISTB-5300-2.

6.8.2.3 If the allowable ranges for test quantities are more restrictive in the Technical Specifications, or other similar governing document, the more restrictive ranges shall be used and the source of the more restrictive requirements shall be referenced in the record of tests.

6.8.3 Alert or Required Action Range Actions

.1 The Engineer evaluating the test shall immediately notify supervision when the data acquired are in the "Alert" or "Required Action Range".

CAUTION **Validation, e.g., verifying the test was conducted using the required system lineup, instruments were not obviously out-of-calibration, a second check of calculations, etc., must be completed as soon as practical following completion of data gathering phase of the test if it is suspected that the pump is in the "Alert" or "Required Action" ranges.**

.2 The Engineer evaluating the test shall validate the data prior to the inoperability declaration.

NOTE: A retest using recalibrated instrumentation is **NOT** allowed as a validation step.

.3 The supervisor is responsible to ensure the IST results are valid and entry into an applicable action statement is accomplished.

Remainder of page left blank.

CAUTION *"The durations specified by the Code for analyzing test results have not been accepted by the NRC for postponing entering a Technical Specification ACTION statement"* [GL 91-18]. As soon as the data are recognized as being within the required action range for pumps or as exceeding the limiting value of full-stroke time for valves, the associated component must be declared inoperable and, if subject to the Technical Specification, the Allowed Outage Time (AOT) specified in the action statement must be started at the time the component was declared inoperable.

6.8.3.4 If the Supervising individual determines the test was valid and the data are in the Alert or Required Action Range, the Supervising individual shall immediately initiate an AR, if one does not already exist, to obtain engineering direction and notify the SRO Operations Supervisor.

WARNING NRC POSITION [GL 91-18]: The NRC guidance on Technical Specification Clock Policy states when performance data fall in the Required Action Range, regardless of whether the limit is equal to or more conservative than the Technical Specification limit, the pump or valve must be declared inoperable immediately and the Technical Specification ACTION statement for the associated system must be entered. In cases where the required action range limit is more conservative than its corresponding Technical Specification limit, the corrective action may not be limited to replacement or repair; it may be an analysis to demonstrate the specific performance degradation does not impair operability and the pump or valve will still fulfill its function, such as delivering the required flow. A new required action range may be established after such analysis which would then allow a new determination of operability.

6.8.4 If deviations fall within the ALERT RANGE of Attachment 1's, Table 2, Table 3, or Table 4 as applicable, the frequency of testing specified in Attachment 2 shall be doubled until the cause of the deviation is determined and the condition corrected. [ISTB-6200(a)]

CAUTION While in ALERT status, the pump test frequency may NOT be extended per the allowance of T.S. 3.0.2 (i.e., 1.25 times interval) per the 1997 NRC/ASME IST SYMPOSISIUM, Answer 1.3.3 (ref. 2.5.10).

6.8.4.1 The test frequency may be returned to normal after the requirements of this Section (6.8) have been met and a successful retest is completed demonstrating operation in the acceptable range.

6.8.5 If deviations fall within the REQUIRED ACTION RANGE of Attachment 1 and/or do not meet or exceed the values discussed in Attachment 6, ***the pump shall be declared inoperable until the cause of the deviation has been determined and the condition corrected.*** [ISTB-6200(b)]

.1 When a test shows deviations outside of the acceptable range of Attachments 1 and/or 6, *following the inoperability declaration*, the instruments involved may be recalibrated and the test rerun.

6.8.6 In cases where the pump's test parameters are within either the alert or required action ranges of Attachment 1's, Table 2, Table 3 or Table 4 as applicable (Table ISTB-5100-1, Table ISTB-5200-1, Table ISTB-5300-2) and the pump's continued use at the changed values is supported by an analysis, a new set of reference values may be established.

NOTE: The absolute vibration limits found in Attachment 1, Table 2 and Table 3, may not be modified without a Pump Relief Request, even though when operating normally a pump does not perform consistently within the ranges identified in Attachment 1.

.1 This analysis shall include:

- a pump level verification of the pump's operational readiness,
- a system level evaluation of operational readiness,
- the cause of the change in pump performance,
- an evaluation of all trends indicated by available data, and
- the results of this analysis shall be documented in the record of tests. [ISTB-6200(c) and ISTB-9000]

6.9 Invalid Test Results

NOTE: Performing an invalid test in no way absolves those responsible from compliance with the surveillance requirements and schedules of the Technical Specifications (e.g., IST requirements) as they apply to the components under test.

6.9.1 If the Supervising Engineer and the Engineer evaluating the test conclude the test is invalid, the test may be ignored and the test records not used. **IN THIS CASE, A VALID TEST SHOULD BE COMPLETED ON THE PUMP IN QUESTION AS SOON AS POSSIBLE TO CONFIRM PUMP OPERABILITY.**

6.10 LCS Not Met Actions

6.10.1 In the event LCS required actions or associated completion time conditions are not met, perform a cause evaluation in accordance with SO123-XV-50.39 (Reference 2.3.10).

7.0 RECORDS

7.1 Pump Records: Records shall be maintained in CDM and shall include the following for each pump covered by this Program Procedure:

7.1.1 The manufacturer and the manufacturer's model; serial and/or other identification number;

7.1.2 A copy or summary of the manufacturer's acceptance test report if available;

7.1.3 A copy of the pump manufacturer's operating limits.

7.2 Inservice Test Plans: Inservice Testing Plans are issued as pump test procedures, Reference 2.4.2. The Inservice Testing Records for the Pumps in the Program shall be maintained and shall include:

7.2.1 The Category of each pump;

7.2.2 The hydraulic circuit used;

7.2.3 The measurement location and type of measurement for the required test parameters;

7.2.4 The reference values;

.1 Reference values of test parameters are recorded on the preservice tests, or other reference test records and are transcribed to the current test each time a test is conducted.

.2 Only one reference test shall be used for a given pump test, that is, a single pump test may not use reference numbers from more than a single reference test.

NOTE: In evaluating a single pump IST, this eliminates the poor practice of using one reference test for hydraulic limits and another reference test for the mechanical or vibration limits.

7.2.5 The method of determining reference values which are not directly measured by instrumentation (such as calculations).

7.3 Records of Tests: There shall be an IST pump record for each pump test which shows the test results for each test, and along with its attachments or referenced documents, such as ARs, indicates corrective actions needed.

7.3.1 Operations shall process IST pump test records in accordance with their procedures.

7.3.2 Maintenance Engineering shall process IST pump records in accordance with Attachment 7.

.1 The IST group shall forward hard copy records to CDM quarterly.

.2 Electronic IST pump records shall be maintained in the PMDS computer data base.

7.3.3 The collective IST pump records shall include, as a minimum: [ISTA-9230]

.1 Pump identification (the Equipment Identification Number from PMDS);

.2 Date of test;

.3 Reason for test (e.g., post-maintenance, routine inservice test, establishing reference values);

.4 Test or examination procedure used;

.5 Calibration records;

.6 Values of measured parameters;

7.3.3.7 Identification of test equipment used;

.8 Comparisons with allowable ranges of test and examination values, and analysis of deviations;

.9 Requirements for corrective action;

.10 Evaluation and justification for changes to reference values;

.11 Printed (or typed) name and signature of the person or persons responsible for conducting and analyzing the test.

7.4 Record of Corrective Action

7.4.1 Records of corrective action shall be maintained by Maintenance Engineering and shall include a summary of the corrections made, the subsequent inservice tests and confirmation of operational adequacy (see Paragraph 6.5.4, above), and the hard copy or electronic signature of the individual responsible for corrective action and verification of results.

7.4.2 Corrective action performed on a pump in the Inservice Testing Program shall be documented with the IST record, on Maintenance Orders, ARs and/or memoranda for file to provide a record of corrective action.

7.4.3 Records of corrective action shall be filed with the IST record or in CDM-SONGS when completed. If on electronic media, such as MOSAIC, they may be retained in accordance with SO123-XX-1 ISS2.

RANGES FOR TEST PARAMETERS

GENERAL NOTES:

a) The subscript r denotes reference value. The subscript d denotes displacement vibration (peak-to-peak). The subscript v denotes Velocity vibration (peak).

b) Refer to Figure 1 of this attachment to establish displacement limits for pumps with speeds ≥600 rpm or velocity limits for pumps with speeds < 600 rpm.

c) All of the San Onofre Pumps in the Inservice Testing Program fall into three groups, including Centrifugal Pumps, which are all pumps except those identified below in notes d) and e).

d) The Charging Pumps S2(3)1208MP190, 191 and 192 are Reciprocating Pumps.

e) The Saltwater Cooling Pumps S2(3)1413MP112, 113, 114, 307, and Diesel Fuel Oil Transfer Pumps S2(3)2421MP093, 094, 095, 096 are Vertical Line Shaft Pumps.

Table 1

INSERVICE TEST PARAMETERS [TABLE ISTB-3000-1]

Quantity	Preservice Test	Group A Test	Group B Test	Comprehensive Test	Remarks
Speed, N	X	X	X	X	If variable speed
Differential Pressure, ΔP	X	X	X [Note (1)]	X	Centrifugal Pumps, including vertical line shaft pumps
Discharge Pressure, P	X	X		X	Positive displacement pumps
Flow Rate, Q	X	X	X [Note (1)]	X	
Vibration	X	X	X [Note (2)]	X	Measure either V_d or V_v
Displacement, V_d					Peak-to-peak
Velocity, V_v					Peak

Note: (1) For positive displacement pumps, flow rate shall be measured or determined. For all other pumps, differential pressure or flow rate shall be measured or determined.
(2) For group B testing, vibration will be measured per commitment to NRC.

RANGES FOR TEST PARAMETERS
Table 2

CENTRIFUGAL PUMP TEST ACCEPTANCE CRITERIA [TABLE ISTB-5100-1]

Test Type	Pump Speed	Test Parameter	Acceptable Range	Alert Range	Required Action Range Low	Required Action Range High
Group A Test	N/A	Q	0.90 to 1.10Q_r	None	<0.90Q_r	>1.10Q_r
[Notes (1), (2)]	N/A	$_\Delta P$	0.90 to 1.10$_\Delta P_r$	None	<0.90$_\Delta P_r$	>1.10$_\Delta P_r$
	<600 rpm	V_d or V_v	≤2.5 V_r	>2.5 V_r to 6 V_r or >10.5 to 22 mils (266.7 to 558.8μm)	None	>6 V_r or >22 mils (558.8μm)
	≥600 rpm	V_v or V_d	≤2.5 V_r	>2.5 V_r to 6 V_r or >0.325 to 0.7 in./sec (0.8 to 1.7 cm/sec)	None	>6 V_r or >0.7 in/sec (1.7 cm/sec)
Group B Test	N/A	Q, or	0.90 to 1.10Q_r	None	<0.90Q_r	>1.10Q_r
[Notes (1), (2)]	N/A	$_\Delta P$	0.90 to 1.10 $_\Delta P_r$	None	<0.90 $_\Delta P_r$	>1.10 $_\Delta P_r$
	<600 rpm	V_d or V_v	≤2.5 V_r	>2.5 V_r to 6 V_r or >10.5 to 22 mils (266.7 to 558.8μm)	None	>6 V_r or >10.5 to 22 mils (558.8μm)
	≥600 rpm	V_v or V_d	≤2.5 V_r	>2.5 V_r to 6 V_r or >0.325 to 0.7 in/sec (0.8 to 1.7 cm/sec)	None	>6 V_r or >0.7 in/sec (1.7 cm/sec)
Comprehensive Test	N/A	Q	0.94 to 1.03Q_r	0.90 to <0.94Q_r	<0.90Q_r	>1.03Q_r
[Notes(1), (2)]	N/A	$_\Delta P$	0.93 to 1.03$_\Delta P_r$	0.90 to <0.93$_\Delta P_r$	<0.90$_\Delta P_r$	>1.03$_\Delta P_r$
	<600 rpm	V_d or V_v	≤2.5 V_r	>2.5 V_r to 6 V_r or >10.5 to 22 mils (266.7 TO 558.8μm)	None	>6 V_r or >22 mils (558.8μm)
	≥600 rpm	V_v or V_d	≤2.5 V_r	>2.5 V_r to 6 V_r or >0.325 to 0.7 in/sec. (0.8 to 1.7 cm/sec)	None	>6 V_r or >0.7 in/sec (1.7 cm/sec)

GENERAL NOTE: The subscript *r* denotes reference value, the subscript *v* denotes vibration velocity reference value, and the subscript *d* denotes displacement.
NOTES:
(1) Vibration parameter per Table 1 (Table ISTB-3000-1). V_r is vibration reference value in the selected units.
(2) Refer to Figure 1 (Fig. ISTB-5200-1) to establish displacement limits for pumps with speeds ≥600 rpm or velocity limits for pumps with speeds <600 rpm.

RANGES FOR TEST PARAMETERS

Table 3

VERTICAL LINE SHAFT AND CENTRIFUGAL PUMP TEST ACCEPTANCE CRITERIA [TABLE ISTB-5200-1]

Test Type	Pump Speed	Test Parameter	Acceptable Range	Alert Range	Required Action Range Low	Required Action Range High
Group A Test	N/A	Q	0.95 to 1.10Q_r	0.93 to <0.95	<0.93Q_r	>1.10Q_r
[Notes (1), (2)]	N/A	ΔP	0.95 to 1.10ΔP_r	0.93 to <0.95 ΔP_r	<0.93ΔP_r	>1.10ΔP_r
	<600 rpm	V_d or V_v	≤2.5 V_r	>2.5 V_r to 6 V_r or >10.5 to 22 mils (266.7 to 558.8 μm)	None	>6 V_r or >22 mils (558.8 μm)
	≥600 rpm	V_v or V_d	≤2.5 V_r	>2.5 V_r to 6 V_r or >0.325 to 0.7 in/sec (0.8 to 1.7 cm/sec)	None	>6 V_r or >0.7 in/sec (1.7 cm/sec)
Group B Test	N/A	Q, or	0.90 to 1.10Q_r	None	<0.90Q_r	>1.10Q_r
[Notes (1), (2)]	N/A	ΔP	0.90 to 1.10ΔP_r	None	<0.90ΔP_r	>1.10ΔP_r
	<600 rpm	V_d or V_v	≤2.5 V_r	>2.5 V_r to 6 V_r or >10.5 to 22 mils (266.7 to 558.8 μm)	None	>6 V_r or >22 mils (558.8 μm)
	≥600 rpm	V_v or V_d	≤2.5 V_r	>2.5 V_r to 6 V_r or >0.325 to 0.7 in/sec (0.8 to 1.7 cm/sec)	None	>6 V_r or >0.7 in/sec (1.7 cm/sec)
Comprehensive Test	N/A	Q	0.95 to 1.03Q_r	0.93 to <0.95Q_r	<0.93Q_r	>1.03Q_r
[Notes(1), (2)]	N/A	ΔP	0.95 to 1.03ΔP_r	0.93 to <0.95ΔP_r	<0.93ΔP_r	>1.03ΔP_r
	<600 rpm	V_d or V_v	≤2.5 V_r	>2.5 V_r to 6 V_r or >10.5 to 22 mils (266.7 to 558.8 μm)	None	>6 V_r or >22 mils (558.8 μm)
	≥600 rpm	V_v or V_d	≤2.5 V_r	>2.5 V_r to 6 V_r or >0.325 to 0.7 in/sec. (0.8 to 1.7 cm/sec)	None	>6 V_r or >0.7 in/sec (1.7 cm/sec)

GENERAL NOTE: The subscript *r* denotes reference value, the subscript *v* denotes vibration velocity reference value, and the subscript *d* denotes displacement.

NOTES:

(1) Vibration parameter per Table 1 (Table ISTB-3000-1). V_r is vibration reference value in the selected units.

(2) Refer to Figure 1 (Fig. ISTB-5000-1) to establish displacement limits for pumps with speeds ³600 rpm or velocity limits for pumps with speeds <600 rpm.

RANGES FOR TEST PARAMETERS

Table 4

RECIPROCATING POSITIVE DISPLACEMENT PUMP TEST ACCEPTANCE CRITERIA [TABLE ISTB-5300-2]

Test Type	Pump Speed	Test Parameter	Acceptable Range	Alert Range	Required Action Range Low	Required Action Range High
Group A Test	N/A	Q	0.95 to 1.10Q_r	0.93 to <0.95	<0.93Q_r	>1.10Q_r
	N/A	P	0.93 to 1.10P_r	0.90 to <0.93 P_r	<0.90P_r	>1.10P_r
	N/A	V_d or V_v (1)	≤2.5 V_r	>2.5 V_r to 6 V_r	None	>6 V_r
Group B Test	N/A	Q, or	0.90 to 1.10Q_r	None	<0.90 Q_r	>1.10Q_r
	N/A	V_d or V_v (1)	≤2.5 V_r	>2.5 V_r to 6 V_r	None	>6 V_r
Comprehensive Test	N/A	Q	0.95 to 1.03Q_r	0.93 to <0.95Q_r	<0.93 Q_r	>1.03Q_r
	N/A	P	0.93 to 1.03P_r	0.90 to <0.93P_r	<0.90 P_r	>1.03P_r
	N/A	V_d or V_v (1)	≤2.5 V_r	>2.5 V_r to 6 V_r	None	>6 V_r

GENERAL NOTE: The subscript *r* denotes reference value, the subscript *v* denotes vibration velocity reference value, and the subscript *d* denotes displacement.

NOTES: (1) Absolute vibration limits are not required for reciprocating positive displacement pumps. [TABLE ISTB-5300-2]

RANGES FOR TEST PARAMETERS
FIGURE 1

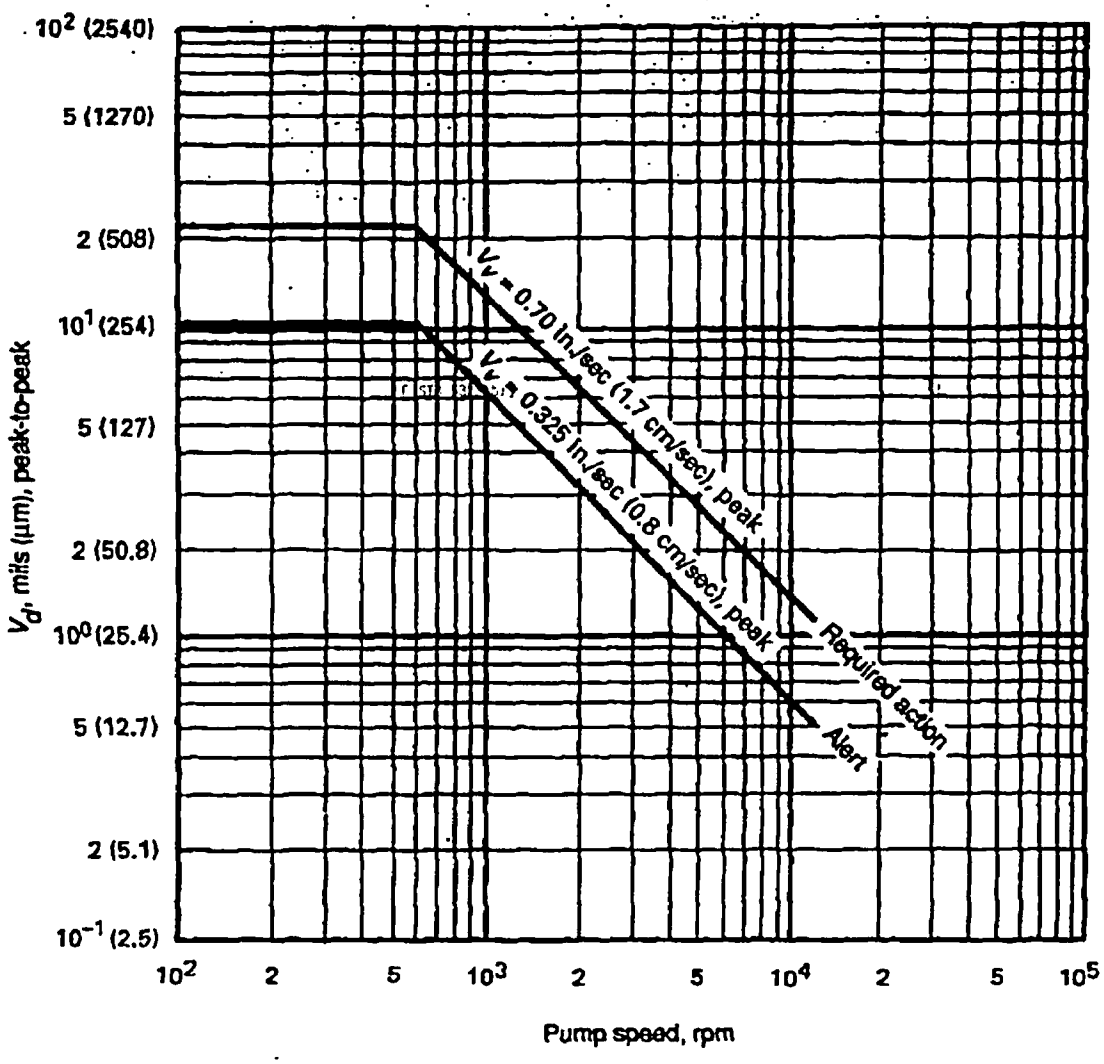

VIBRATION LIMITS
(ISTB-5200-1)

PUMPS TESTED WITHIN THE INSERVICE TESTING PROGRAM

INTRODUCTION:

Components subject to the Inservice Testing Program for Pumps in accordance with ISTA, ISTB and DBD-SO23-TR-IS3 are identified herein. This attachment also identifies the parameters to be measured, test frequency, and notes.

GENERAL NOTES:

1. Group A, B and Comprehensive Testing is performed at the frequencies stated in 6.6.1. [Table ISTB-3400-1]

2. In accordance with the requirements of Attachment 1, Table 1, parameters measured for each pump include: Differential Pressure (except for charging pumps), Discharge Pressure, Flow Rate, and Vibration. [Table ISTB-3000-1]

3. Rotational Speed is measured for variable speed pump in each plant 2(3)1305MP140, the Steam Driven Auxiliary Feedwater Pump.

EQUIPMENT TAG NUMBER	P&ID/COORDINATES	NOTES
Containment Spray System Pumps (Group B)		
S2(3)1206MP012	40114A/C-5	These pumps are tested quarterly on miniflow recirculation without flow measurement and with full flow at refueling intervals[1]. Group B testing requires flow measurement. Group B and Comprehensive Testing required. [Reference RR IST-3-P-2, IST-3-P-3, IST-3-P-4]
S2(3)1206MP013	40114A/G-4	
Low Pressure Safety Injection Pumps (Group A)		
S2(3)1204MP015	40112B/G-4	These Pumps are tested quarterly on miniflow recirculation without flow measurement and with full flow (using the shutdown cooling system flow path) each cold shutdown intervals[1]. Testing shall be in accordance with Technical Specification Surveillance SR 3.5.2.5. Group A testing requires flow measurement. Group A and Comprehensive Testing required. [Reference RR IST-3-P-2, IST-3-P-3, IST-3-P-4]
S2(3)1204MP016	40112B/E-4	

PUMPS TESTED WITHIN THE INSERVICE TESTING PROGRAM

EQUIPMENT TAG NUMBER	P&ID/COORDINATES	NOTES
High Pressure Safety Injection Pumps (Group B)		
S2(3)1204MP017	40112A/G-4	Testing shall be in accordance with Technical Specification Surveillance SR 3.5.2.5. Group B and Comprehensive Testing required. [Reference RR IST-3-P-4]
S2(3)1204MP018	40112A/E-4	
S2(3)1204MP019	40112A/C-4	
Component Cooling Water Pumps (Group A)		
S2(3)1203MP024	40127A/G-4	Group A and Comprehensive Testing required. [Reference RR IST-3-P-2, IST-3-P-4]
S2(3)1203MP025	40127A/D-5	
S2(3)1203MP026	40127A/B-5	
Diesel Generator Fuel Oil Transfer Pumps (Group A)		
S2(3)2421MP093	40116A/B-7	These are vertical line shaft pumps and are tested in accordance with ISTB for this style of pump. Group A and Comprehensive Testing required. [Reference RR IST-3-P-2, IST-3-P-4]
S2(3)2421MP094	40116A/B-4	
S2(3)2421MP095	40116A/B-3	
S2(3)2421MP096	40116A/B-6	
Salt Water Cooling Pumps (Group A)		
S2(3)1413MP112	40126A/F-5	These are vertical line shaft pumps and are tested in accordance with ISTB for this style of pump. Group A and Comprehensive Testing required. [Reference RR IST-3-P-1, IST-3-P-4]
S2(3)1413MP113	40126A/D-5	
S2(3)1413MP114	40126B/D-5	
S2(3)1413MP307	40126B/G-5	

PUMPS TESTED WITHIN THE INSERVICE TESTING PROGRAM

EQUIPMENT TAG NUMBER	P&ID/COORDINATES	NOTES
Auxiliary Feedwater Pumps (Group A)		
S2(3)1305MP140	40160A/E-5	These Pumps are tested ***QUARTERLY*** on mini-flow recirculation without flow measurement. Accordingly, the 25% test interval extension allowed under Technical Specification SR 3.0.2 is calculated using a 31 day frequency from when the previous pump was tested. The pumps are tested with full (or substantial) flow (using the Emergency AFW flow path to the Steam Generators) each cold shutdown if it has been more than one quarter since the last full flow test.[1] Testing shall be in accordance with Technical Specification Surveillance SR 3.7.5.2. Group A and Comprehensive Testing required. Group A testing requires flow measurement. [Reference RR IST-3-P-3, IST-3-P-4]
S2(3)1305MP141	40160A/B-5	
S2(3)1305MP504	40160A/G-5	
Aux. Building Emergency Chilled Water Pumps (Group B)		
SA1513MP160	40180A/D-5	These pumps are common to both Units 2 and 3 and are grouped under "Unit 2 and Common" for tracking purposes. Group B and Comprehensive Testing required. [Reference RR IST-3-P-2, IST-3-P-4]
SA1513MP162	40179A/E-5	
Boric Acid Makeup (BAMU) Pumps (Group A)		
S2(3)1218MP174	40125B/D-7	Group A and Comprehensive Testing required. [Reference RR IST-3-P-4]
S2(3)1218MP175	40125B/B-7	
Reactor Charging Pumps (Group A)		
S2(3)1208MP190	40124B/G-3	These are reciprocating pumps and are tested in accordance with ISTB for this style of pump to meet Technical Specifications Surveillance SR 3.1.9.5. Group A and Comprehensive Testing required. [Reference RR IST-3-P-1, IST-3-P-4]
S2(3)1208MP191	40124B/E-3	
S2(3)1208MP192	40124B/C-5	
Component Cooling Water Seismic Makeup Pumps (Group B)		
S2(3)1203MP1018	40127J/E-4	Group B and Comprehensive Testing required. [Reference RR IST-3-P-2, IST-3-P-4]
S2(3)1203MP1019	40127J/C-4	

[1] This testing is in compliance with NRC GL 89-04 Attachment 1, Position 9, and Reference 2.1.10.

EG(123) 53, INSERVICE PUMP TEST RECORD AND KEY POINTS

CDM Encode No. _____

Test Procedure Used _____ Record No. _____

Unit _____ Test Date _____

1 Plant Tag No. (EXAMPLE S1-CCW-G-13C, S21203MP023, ETC)	2 Pump Name (System) (EXAMPLE: COMPONENT COOLING WATER PUMP, ETC.)	
3 Tested By	4 Reason for Test (GROUP A, GROUP B, COMPREHENSIVE, POST MAINTENANCE, ETC.)	
5 Plant Power	6 Reference IST Record No./Date RECORD NO. DATE	
7 Test Frequency	8 Date Last Tested	9 Run Time Before Test (MUST BE AT LEAST 2 MIN.)

HYDRAULIC DATA		INSTRUMENT ID. (ENTER "C" FOR CALC'D VALUE)	CALIBRATION DUE DATE	UNITS	SET REF.	REFERENCE VALUE	TEST VALUE	ACCEPTABLE RANGE
10	Prestart Suction Pressure (Ps)							
11	Speed (N)							
12	Discharge Pressure (Po)							
13	Running Suction Pressure (Pi)							
14	Differential Pressure (Po-Pi)							
15	Motor Current (A)							
16	Flow Rate (Q)							

Calculations

MECHANICAL DATA

Vibration Instrument ID _____ Calibration Due Date _____

		Vibration Axis	Displacement (Mils) REFERENCE VALUE	Displacement (Mils) TEST VALUE	Displacement (Mils) ACCEPTABLE RANGE	Velocity (IPS) REFERENCE VALUE	Velocity (IPS) TEST VALUE	Velocity (IPS) ACCEPTABLE RANGE
17	Point No. 1	Horiz. (0 Deg.)						
18		Vert. (90 Deg.)						
19		Axial						
20	Point No. 2	Horiz. (0 Deg.)						
21		Vert. (90 Deg.)						
22		Axial						

23 Lubrication Level/Pressure — Bulls Eye _____ Chicken Feeder _____ Other _____ Sat _____ UnSat _____

24 BEARING TEMPERATURES

Instrument ID. _____

Cal. Due Date _____

Date Last Taken _____

Reference Data Record No. _____

Reference Temperature _____

Max. Allowable Temperature _____

	Point No. 1 TIME	Point No. 1 TEMP	Point No. 1 % CHANGE	Point No. 2 TIME	Point No. 2 TEMP	Point No. 2 % CHANGE
1						
2						
3						
4						

CORRECTIVE ACTION/REVIEW RESULTS

25 REQUIRED ACTION	26 NCR NO. AND/OR M.O. NO.
27 ENGINEER PERFORMING OPERABILITY ANALYSIS (PQS T3EN15), Name & Signature DATE	28 SUPERVISING ENGINEER OR DESIGNEE (pqs T3EN16), Name & Signature DATE
29 T3EN16 QUALIFICATIONS VERIFIED BY INITIALS	30 T3EN16 QUALIFICATIONS VERIFIED BY INITIALS

EG(123) 53 REV.4 04/04

FACSIMILE

EG(123) 53, INSERVICE PUMP TEST RECORD AND KEY POINTS
Key Points

NOTE: All blocks must be completed or marked "NOT USED" per SO123-VI-1.0.3. For clarity, it is recommended that a diagonal line be drawn through the Block(s) not used and "NOT USED" be written on the diagonal.

Blank	Instructions
"CDM Encode No."	Leave blank.
"Test Procedure Used"	Record the procedure used to conduct the Inservice Test on the Pump being tested.
"Record No."	Determine the record number as follows: 1) Pump Number 2) Month Tested 3) Year Tested Example: 2P096-5-93 NOTE: If more than one test is run on a given pump in the same month, add a letter following the test number to separate it from the preceding test(s). Example: 2P096-5-93 (First Test) 2P096-5-93A (Second Test) 2P096-5-93B (Third Test) etc.
"Test Date"	Record the date the test was conducted.
"Unit"	Self-Explanatory.
1 Plant Tag No.	Use the plant tag number as it appears in the PMDS (Example provided on the form).
2 Pump Name (System)	Use the pump name and system name as they appear in the PMDS (Example provided on the form).
3 Tested By	Printed (or typed) name and signature of the individual who conducted the Inservice Test. [ISTA-9230]

EG(123) 53, INSERVICE PUMP TEST RECORD AND KEY POINTS

Blank	Instructions (Continued)
4 Reason for Test	Indicate the cause for initiating the test (Examples provided on the form).
5 Plant Power	Enter the Plant power in Percent (preferred), by plant Mode (M-4, M-1, etc.), or any other way to differentiate this test from other tests that might have different results depending on plant mode.
6 Reference IST Record No./Date	Record the record number and date of the reference test from which the values recorded under "Reference Value" in the body of this form are taken.
7 Test Frequency	Record the frequency that the pump is currently undergoing Inservice Tests. This is normally monthly or quarterly, but if the pump is in ALERT, it may be on a 15 day interval or 46 day interval.
8 Date Last Tested	Self-Explanatory.
9 Run Time Before Test	Record the time the pump is running before data is taken. This shall be at least 2 minutes after pump conditions are as stable as the system permits. If the pump has been running before the test started (the pump is in service, for example), write "> 2 Min.", or equivalent, in this block. Not required for Group B tests.
HYDRAULIC DATA	Columns:

Instrument ID - Put the control number used for control and calibration of the instrument in this block. If the data recorded in this row are calculated put "C" in this block.

Calibration Due Date - Put the date the instrument calibration will expire, or the recall date in this block.

Units - Record the units of measurement for the values recorded in this row (Examples: Feet, PSI, PSID, GPM, lbs/hr, etc.).

Set Ref. - If this row is the reference to which the system is adjusted to achieve the reference conditions, put a check mark in this column. For example, if the test is run such that the flow rate is set on a constant value and the differential pressure is measured to verify the condition of the pump, put a check mark in this column next to "Flow Rate".

EG(123) 53, INSERVICE PUMP TEST RECORD AND KEY POINTS

HYDRAULIC DATA

Columns: (Continued)

Reference Value - Record the value for this parameter from the reference test identified in Block 6. If this is a reference test leave this column blank and put the test results in the "Test Value" column.

Test Value - Record the value for this parameter from the measurement made during the test currently being run.

Acceptable Range - Calculate the acceptance range from Attachment 1's, Table 2, Table 3, or Table 4, as applicable, to this procedure and record the result here.

NOTE: Measured test quantities must also meet or exceed the values discussed in Attachment 6, *MINIMUM PUMP PERFORMANCE TO ACHIEVE SAFETY ANALYSIS COMPLIANCE.*

If the acceptance range is more restrictive than that indicated on Attachment 1 (for example, due to Technical Specification limits), indicate the correct acceptance range here and do not use Attachment 1 (explain the difference on the reference test record to facilitate future review).

10	Prestart Suction Pressure (Pa)	Record the pressure at the pump suction before the pump is started and verify sufficient NPSH is available to safely run the pump. If the pump is already running, or this value is normally unavailable, mark "NOT USED" in this row.
11	Speed (N)	Record the component speed if this is required. If pump speed is not required, mark "NOT USED" in this row.
12	Discharge Pressure (Po)	Record the pressure at the pump discharge in accordance with the test procedure. If this value is normally unavailable or not recorded, mark "NOT USED" in this row.
13	Running Suction Pressure (Pi)	Record the pressure at the pump suction in accordance with the test procedure. If this value is normally unavailable or not recorded, mark "NOT USED" in this row.
14	Differential Pressure (Po-Pi)	This is normally a calculated value. Record the results of this calculation or measurement in the "Test Value" column. If this value is normally unavailable or not recorded, mark "NOT USED" in this row.

EG(123) 53, INSERVICE PUMP TEST RECORD AND KEY POINTS

HYDRAULIC DATA Columns: (Continued)

15 Motor Current (A) — Record the motor current as read per the test procedure. If this value is normally unavailable or not recorded, mark "NOT USED" in this row.

16 Flow Rate (Q) — Record the test loop flow rate per the test procedure. If this value is normally unavailable or not recorded, mark "NOT USED" in this row.

CALCULATIONS If a calculation (such as for differential pressure) is required, it may be made here, if not otherwise required to be elsewhere by the test procedure. In addition, significant Maintenance Orders should be recorded here.

MECHANICAL DATA Adjacent to the "Mechanical Data" title, is a place to record the vibration instrument ID, its attachment(s) (such as probe) ID and the calibration due dates. This information shall be recorded here.

CAUTION When vibration readings are taken on 4KV motors, use an accelerometer vibration detector to avoid erroneous readings due to electrical fields.

Columns:

Vibration Axis - These are defined in the test procedure. Exercise care to place the vibration transducer at the same position for each test. Also, make every effort to keep the vibration probe perpendicular (Rule of Thumb: Within 15 degrees of normal to the surface) to the surface from which the readings are being taken.

Reference Value, Test Value, and Acceptable Range - For both Displacement and Velocity, these columns mean the same as that described under "Hydraulic Data", above.

17, 18, 19, 20, 21
22 Point Nos. 1 and 2 — Horizontal, Vertical, and Axial - This data is measured as described in the Test Procedure for the specific pump.

EG(123) 53, INSERVICE PUMP TEST RECORD AND KEY POINTS

MECHANICAL DATA (Continued)

23	Lubrication Level/Pressure	Identify the type of lubrication device on the bearing(s) of concern and whether the lubrication level and pressure, as applicable, are satisfactory.
24	Bearing Temperatures	Bearing temperatures are no longer required by the Code and data is not required to be entered.

CORRECTIVE ACTION/REVIEW RESULTS

25	Required Action	If the pump is evaluated as satisfactory, indicate the result by recording "N/A - Pump is Sat.", or equivalent. If the pump fails the IST or is in ALERT, indicate this and explain the required action (Example: "Pump in ALERT - Test interval 46 days").
26	NCR No. and/or MO No.	If there is an AR/NCR and/or MO resulting from this IST, record its number, otherwise write "N/A" in this block.
27	Engineer Performing Operability Analysis	The individual evaluating the test results enters printed (or typed) name and signs in this block.
28	Supervising Engineer or Designee	The Supervising individual approving the test results enters printed (or typed) name and signs this block.
29	Engineer PQS Qualification Verification	Initial verifying Engineer performing operability analysis is PQS qualified as indicated.
30	Supervising Engineer PQS Qualification Verification	Initial verifying Supervising Engineer approving test results is PQS qualified as indicated.

PUMP RELIEF REQUESTS

10 CFR 50.55a Request Number IST-3-R-1 Rev. 1
Information to Support NRC Re-Approval of a 10CFR 50.55a Request for Use During a New 10-Year Interval Inservice Testing Program

Proposed Alternative
In Accordance with 10 CFR 50.55a(a)(3)(i)

Alternative Provides Acceptable Level of Quality and Safety

1.0 Previous 10 CFR 50.55a Request Approved by NRC

Relief Request Number: IST-001

ASME Code Components Affected:

Various (Refer to Table 2.3-1 of the Station Risk-Informed Inservice Testing Program), References 1 and 2.

References:

1. Letter from A. E. Scherer (SCE) to the Document Control Desk (NRC) dated December 30, 1998; Subject: Docket Nos. 50-361 and 50-362, Request to implement a Risk-informed Testing Program During the Remainder of the Second Ten-Year Interval, San Onofre Nuclear Generating Station, Units 2 and 3.

2. Letter from A.E. Scherer (SCE) to the Document Control Desk (NRC) date November 30, 1999; Subject Docket Nos. 50-361 and 50-362, Risk-Informed Inservice Testing (TAC Nos. MAC 4509 and MA 4510) San Onofre Nuclear Generating Station, Units 2 and 3.

3. Letter from Stephen Dembek (NRC) to Harold B. Ray (SCE) dated March 27, 2000; Subject: San Onofre Nuclear Generating Station (SONGS), Units 2 and 3 – Risk-Informed Inservice Testing Program for Pumps and Valves (TAC NOS. MA 4509 and MA 4510)

2.0 Applicable Code and Addenda

Code-1998 Code for Operation and Maintenance of Nuclear Power Plants, ASME OMa Code-1999 and ASME OMb Code-2000

3.0 Changes to the Applicable ASME Code Section

OM-1 of OM Code-1987, OMa-1988, OMb-1999 has been incorporated as a mandatory Appendix 1 of the OM Code 1998, OMa-1999, OMb-2000. Relief valves are excluded from the Risk Informed Inservice Testing (RI-IST) program because Southern California Edison (SCE) plans to continue to test these components at the prescribed intervals of OM Code 1998, OMa-1999, OMb-2000.

PUMP RELIEF REQUESTS
10 CFR 50.55a Request Number IST-3-R-1 Rev. 1

OM-6 of OM Code-1987, OMa-1988, OMb-1999 has been renumbered as ISTB of the OM Code 1998, OMa-1999, OMb-2000. ISTB defined pump categories as Group A and Group B pumps and their test frequencies are addressed in ISTB-3400. Both Group A and B pumps are subject to biennial comprehensive pump tests as tabulated in Table ISTB-3400-1. Instrument accuracies associated with respective pump tests are addressed in ISTB-3500 and summarized in Table ISTB-3500-1. Inservice Testing of centrifugal pumps, except vertical line shaft centrifugal pumps, shall be in accordance with ISTB-5100; vertical shaft centrifugal pumps shall be tested in accordance with ISTB-5200; and positive displacement pumps shall be tested in accordance with ISTB-5300. ISTB-5123, ISTB-5223, and ISTB-5323 address comprehensive testing which is not addressed in OM-6 of OM Code-1987, OMa-1988, OMb-1999. Frequency of Inservice Testing is tabulated in Table ISTB-3400-1.

OM-10 of OM Code-1987, OMa-1988, OMb-1999 has been renumbered as ISTC of the OM Code 1998, OMa-1999, OMb-2000. Per ISTC-1200, skid-mounted valves are excluded from Subsection ISTC, provided they are tested as part of the major component. ISTC-5000, Specific Testing Requirements, and associated Subsections have been added. ISTC-3540 Manual Valves states that manual valves shall be full stroke exercised at least once every 5 years except where adverse conditions may require the valve to be tested more frequently. ISTC-3522 Category C Check Valves requires check valve exercise tests to include open and close tests that are performed at an interval when it is practicable to perform both tests. Open and close tests are not required to be performed at the same time if they are performed within the same interval.

In the 2nd 10-year interval, SCE in Relief Request IST-001, presented an alternative testing strategy that will apply to successive 10-year intervals as discussed in 10 CFR 50.55a(f)(4)(ii). This relief was granted by the NRC on March 27, 2000 – Reference 3. The Code changes cited above do not affect the Risk Informed Inservice Test Program because Inservice Testing of High Safety Significant Components (HSSC) will be conducted at Code specified frequencies using approved Code methods. L-H components [Low Safety Significant Components (LSSC) with low Fussell-Vesely and high Risk Achievement Worth] and LSSC will be tested at extended test frequencies determined in accordance with the RI-IST program description.

4.0 Component Aging Factors

Component aging factors do not have an effect on Risk Informed Inservice Testing because the intent of Inservice Testing is to detect component degradation regardless of the component age. Subsections - ISTA, ISTB, ISTC and Appendix 1 of the OM Code do not address component aging.

5.0 Changes in Technology for testing the Affected ASME Code Components(s)

The qualitative and quantitative data collected by instruments used in the Risk Informed Inservice Testing program is not affected by any change in technology.

PUMP RELIEF REQUESTS

10 CFR 50.55a Request Number IST-3-R-1

6.0 Proposed Alternative and Basis for Use

Alternate Testing: Implement a Risk Informed Inservice Testing Program per the guidance detailed in Regulatory Guide 1.175, "An Approach for Plant-Specific, Risk Informed Decision making: Inservice Testing."

Group A pump, Group B pump, and Valve testing shall be performed in accordance with the requirements stated in ASME OM Code-1998 for Operation and Maintenance of Nuclear Power Plants, ASME OMa Code-1999 and ASME OMb Code-2000, except that the test intervals are determined per the methodology outlined in Enclosure 2 of Relief Request IST-001 (References 1 and 2).

NOTE: Comprehensive pump testing will be performed at the OM Code, ISTB Specified frequency (Biennially).

Basis for Relief: The proposed alternative testing strategy provides an acceptable level of quality and safety because key safety principles of defense-in-depth and safety margins are maintained. The impact of the proposed changes to the testing strategy has been evaluated and meets the criteria specified in the acceptance guidelines of Regulatory Guide 1.174, "An Approach for Using Probabilistic Risk Assessment in Risk-Informed Decisions on Plant-Specific Changes to the Licensing Basis." The complete description and supporting bases reside in the San Onofre Nuclear Generating Station Risk Informed Inservice Testing Program, submitted to the NRC on December 30, 1998 and supplemented by letter dated November 30, 1999 (References 1 and 2) and approved by the NRC on March 27, 2000 (Reference 3).

7.0 Confirmation of Renewed Applicability

Based on the information provided in the previous 10 CFR 50.55a request (References 1 and 2), information contained with the NRC approval documents (Reference 3) and the information provided above, the circumstances and basis continue to be applicable to this proposed relief request IST-3-R-1, Rev. 1.

8.0 Duration of Re-Approved 10 CFR 50.55a Request

This request is for the duration of the 3rd 10-year program interval that shall commence on May 1, 2004 and terminate on August 17, 2013.

PUMP RELIEF REQUESTS
10 CFR 50.55a Request Number IST-3-P-1 Rev. 1
Information to Support NRC Re-Approval of a 10CFR 50.55a Request for Use During a New 10-Year Interval Inservice Testing Program

Proposed Alternative
In Accordance with 10 CFR 50.55a(a)(3)(i)

Alternative Provides Acceptable Level of Quality and Safety

1.0 Previous 10 CFR 50.55a Request Approved by NRC

Relief Request Number: Pump Relief Request Number 12

ASME Code Components Affected:

Saltwater Cooling Pumps (SWC):	P112, P113, P114 and P307
Reactor Charging Pumps:	P190, P191 and P192

References:

1. Letter, W. C. Marsh to USNRC, ASME Code Update for the Second Ten-Year Interval, Inservice Testing Program, August 17, 1993

2. NRC Letter, dated August 31, 1994, Second 10-Year Interval for Inservice Testing of Pumps and Valves (Unit 2 - TAC No. M87283 and Unit 3 - TAC No. M87284)

2.0 Applicable Code and Addenda

ASME OM Code-1998 Code for Operation and Maintenance of Nuclear Power Plants, ASME OMa Code-1999 and ASME OMb Code-2000.

3.0 Applicable Code Requirement

ISTB-3510(b)(1) - the full-scale range of each analog instrument shall not be greater than three times the reference value, as it applies to ISTB-5221, ISTB-5321 and ISTB-5323.

4.0 Changes to the Applicable ASME Code

OM-6 of OM Code-1987, OMa-1988, OMb-1999 has been renumbered as ISTB of the OM Code 1998, OMa-1999, OMb-2000. OM-6, Section 4.6 Instrumentation defined the requirements of instrumentation used in Inservice Testing of pumps. ISTB-3500 Data Collection of the OM Code 1998, OMa-1999, OMb-2000 define the requirements of instrumentation used in the Inservice Testing of pumps.

PUMP RELIEF REQUESTS

10 CFR 50.55a Request Number IST-3-P-1 Rev. 1

In the 2nd 10-year interval, Southern California Edison (SCE) in Pump Relief Request Number 12, requested relief from the full scale range requirements for pressure and flow rates (Section 4.6.1.1 of OM-6) for SWC pump discharge pressure and Charging pump suction pressure and flow. This relief was granted on August 31, 1994 (Reference 2). The instrument full-scale range requirement of Code editions cited above did not change. Therefore the changes to the applicable ASME OM Code have no effect on this request.

5.0 Component Aging Factors

Subsection ISTB of the OM Code does not address component aging. Instrument range and accuracy is independent of component aging factors as they are calibrated according to established standards regardless of component age.

6.0 Changes in Technology for testing the Affected ASME Code Components(s)

The required instrument full-scale range and accuracy requirement of the OM Code is not affected by any change in technology.

7.0 Proposed Alternative and Basis for Use

Alternate Testing: Use installed pressure and flow instrumentation as listed in Table 1 for Group A pump test for:

1. SWC Pumps (Group A)
2. Charging Pumps (Group A)

NOTE: Temporary pressure gauges that meet the range and accuracy requirements of the Code shall be used for Comprehensive Pump Testing.

Use installed flow instrumentation as listed in Table 1 for Comprehensive pump test for:

1. Charging Pumps (Comprehensive)

Basis for Relief: Relief is requested from the full scale range requirements of ISTB-3510(b)(1) for SWC pump discharge pressure when implementing Group A Test Procedure for Vertical Line Shaft Centrifugal Pumps - ISTB-5221; Charging pump suction pressure and flow when implementing Group A Test Procedure for Positive Displacement Pumps - ISTB-5321, and Charging pump flow when implementing Comprehensive Test Procedures - ISTB-5323.

PUMP RELIEF REQUESTS

10 CFR 50.55a Request Number IST-3-P-1 Rev. 1

The instruments listed in Table 1 do not meet the ISTB-3510(b)(1) requirement (i.e., the full-scale range of each instrument shall not be greater than three times the reference value). However, the manufacturer's stated accuracy for each pressure instrument listed in Table 1 exceeds the Group A accuracy requirements. Similarly, although the charging pump flow instrument, FI-0212's range is approximately 3.5 times the reference value, the gauge's accuracy of 1% exceeds the ISTB required accuracy of 2% for Group A and Comprehensive pump tests.

Even though the existing installed station instruments do not meet the code range requirement, their accuracy is better than the code requirements. Thus the combination of range and accuracy of the installed instrument yields a reading that is better than the reading achieved from instruments that meet the minimum Code requirement.

PUMP RELIEF REQUESTS

10 CFR 50.55a Request Number IST-3-P-1 Rev. 1

Table 1

Pump	Parameter	Instrument	Instrument Range (Range/ Ref Value)	Reference Value[1]	Maximum Inaccuracy Permitted by Code[2]	As Installed Accuracy at Full Scale (error at full scale)
Saltwater Cooling System Pumps						
P112	Disch. Press.	PI-6230	0 - 160 (5.0)	32.4 psig	1.94 psig	0.5% (0.8 psig)
P113	Disch. Press.	PI-6231	0 - 160 (5.2)	31 psig	1.86 psig	0.5% (0.8 psig)
P114	Disch. Press.	PI-6233	0 - 160 (5.9)	27 psig	1.62 psig	0.5% (0.8 psig)
P307	Disch. Press.	PI-6232	0 - 160 (5.5)	29 psig	1.74 psig	0.5% (0.8 psig)
Reactor Charging Pumps						
P190	Suction Press.	PI-9284	0 - 160 (3.5)	46.0 psig	2.76 psig	0.625% (1.0 psig)
P191	Suction Press.	PI-9285	0 - 160 (3.6)	44.0 psig	2.64 psig	0.625% (1.0 psig)
P192	Suction Press.	PI-9286	0 - 160 (3.2)	50.0 psig	3 psig	0.625% (1.0 psig)
P190,	Flow	FI-0212	0 - 150 (3.3)	44.9 gpm	2.69 gpm	1.00% (1.50 gpm)
P191 &			0 - 150 (3.4)	44 gpm	2.64 gpm	1.00% (1.50 gpm)
P192			0 - 150 (3.3)	45 gpm	2.7 gpm	1.00% (1.50 gpm)

[1] Reference values are based on historical data for like pumps. Future values may be lower, but overall Code accuracy requirements would be met or exceeded under all conditions under which an IST would be performed.

[2] The information in this column represents the gauge error permitted by the code (3 times the reference value X code required accuracy of 2% for Group A and B testing and for flow only during Comprehensive Pump Testing).

PUMP RELIEF REQUESTS

10 CFR 50.55a Request Number IST-3-P-1 Rev. 1

8.0 Confirmation of Renewed Applicability

Based on the information provided in the previous 10 CFR 50.55a request (Reference 1), information contained with the NRC approval documents (Reference 2) and the information provided above, the circumstances and basis continue to be applicable to this proposed relief request IST-3-P-1.

9.0 Duration of Re-Approved 10 CFR 50.55a Request

This request is for the duration of the 3rd 10-year program interval that shall commence on May 1, 2004 and terminate on August 17, 2013.

PUMP RELIEF REQUESTS
10 CFR 50.55a Request Number IST-3-P-2 Rev. 1
Information to Support NRC Re-Approval of a 10CFR 50.55a Request for Use During a New 10-Year Interval Inservice Testing Program

Proposed Alternative
In Accordance with 10 CFR 50.55a(a)(3)(i)

Alternative Provides Acceptable Level of Quality and Safety

1.0 Previous 10 CFR 50.55a Request Approved by NRC

Relief Request Number: Pump Relief Request Number 13

ASME Code Components Affected:

ECW Pumps:	P160 and P162
CCW Seismic Make-up Pumps:	P1018 and P1019
DGFO Transfer Pumps:	P093, P094, P095, P096
CSS Pumps:	P012 and P013
LPSI Pumps:	P015 and P016

References:

1. Letter, W. C. Marsh to USNRC, Inservice Testing Program, Pump Relief Requests Nos. 13 and 14, November 22, 1994.

2. NRC letter, dated April 19, 1995, Inservice Testing (IST) Relief PRR-13 and PRR-14 to the San Onofre Nuclear Generating Station Units 2 and 3 IST Program Plan (TAC Nos. M91087 and M91088).

2.0 Applicable Code and Addenda

ASME OM Code-1988 Code for Operation and Maintenance of Nuclear Power Plants, ASME OMa Code-1999 and ASME OMb Code-2000.

3.0 Applicable Code Requirements

ISTB-3510(b)(1) - the full-scale range of each analog instrument shall not be greater than three times the reference value, as it applies to ISTB-5121, ISTB-5122, ISTB-5123, and ISTB-5221.

4.0 Changes to the Applicable ASME Code

OM-6 of OM Code-1987, OMa-1988, OMb-1999 has been renumbered as ISTB of the OM Code 1998, OMa-1999, OMb-2000. OM-6, Section 4.6 Instrumentation defined the requirements of instrumentation used in Inservice Testing of pumps. ISTB-3500 Data Collection of the OM Code 1998, OMa-1999, OMb-2000 defines the requirements of instrumentation used in the Inservice Testing of pumps.

PUMP RELIEF REQUESTS

10 CFR 50.55a Request Number IST-3-P-2 Rev. 1

In the 2nd 10-year interval, Southern California Edison, in Pump Relief Request Number 13, requested relief from OM-6, Section 4.6.1.2(a) that required the full scale range of each analog instrument shall not be greater than three times the reference value. This relief was granted on April 19, 1995 (Reference 2). The required instrument full scale range requirement of the Code edition cited above did not change for Group A, B, or Comprehensive Pump Tests. Therefore the changes to the applicable ASME OM Code have no effect on this request.

5.0 Component Aging Factors

Subsection ISTB of the OM Code does not address component aging. Instrument full-scale range and accuracy is independent of component aging factors as they are calibrated according to established standards regardless of component age.

6.0 Changes in Technology for testing the Affected ASME Code Components(s)

The required instrument full-scale range and accuracy requirement of the OM Code is not affected by any change in technology.

7.0 Proposed Alternative and Basis for Use

(A) Alternate Testing: Use installed instrumentation as listed on Table 1 for Group A and B pump testing for:

1. Emergency Chilled Water Pumps (Group B)
2. Component Cooling Water Seismic Make-up Pumps (Group B)
3. Diesel Generator Fuel Oil Transfer Pumps (Group A)

NOTE: Temporary pressure gauges that meet the range and accuracy requirements of the Code shall be used for Comprehensive Pump Testing.

PUMP RELIEF REQUESTS

10 CFR 50.55a Request Number IST-3-P-2 Rev. 1

Basis for Relief: Relief is requested from the full scale range requirements of ISTB-3510(b)(1) for the ECW Pumps' suction pressure gauges, the CCW Seismic Make-up Pumps' suction pressure gauges, and the Diesel Generator Fuel Oil (DGFO) Transfer Pumps' discharge pressure gauges. The instruments listed in Table 1 do not meet the ISTB-3510(b)(1) requirement (i.e., the full-scale range of each instrument shall not be greater than three times the reference value). As seen in Table 1, the ratios of Instrument Range to Reference Value (Range/Ref. Value) vary from 3.3 to 6.2. However, the manufacturer's stated accuracy for each pressure instrument listed in Table 1 exceeds the Group A and Group B accuracy requirements as stated in Table ISTB-3500-1. Thus, the combination of range and accuracy of the installed instrumentation yields a reading that is better than the reading achieved from instruments that meet the minimum Code requirements.

PUMP RELIEF REQUESTS

10 CFR 50.55a Request Number IST-3-P-2 Rev. 1

TABLE 1

Pump	Parameter	Instrument	Reference Value[1]	Instr. Range (Range/Ref Value)	Error Permitted by Code[2]	As Installed Accuracy at Full Scale (error at full scale)
Emergency Chilled Water Pumps						
P160 P162	Suction Pressure	PI-9883B PI-9883A	27 psig	0-160 (5.9)	1.62 psig	0.5% (0.8 psig)
Component Cooling Water Seismic Make-up Pumps (Group B)						
P1018 P1019	Suction Pressure	PI-6566 PI-6565	9.0 psig	0-30 (3.3)	0.54 psig	0.5% (0.15 psig)
Diesel Generator Fuel Oil Transfer Pumps						
P093 P094 P095 P096	Discharge Pressure	PI-5973 PI-5975 PI-5976 PI-5974	9.7 psig	0-60 (6.2)	0.58 psig	0.5% (0.3 psig)

(B) Alternate Testing: Use installed instrumentation as listed in Table 2 for Group A, B and Comprehensive pump testing for:

1. Containment Spray System Pumps (CSS) (Group B and Comprehensive)
2. Low Pressure Safety Injection (LPSI) Pumps (Group A and Comprehensive)

---

1 Reference values are based on historical data for like pumps. Future values may be lower, but overall Code accuracy requirements would be met or exceeded under all conditions under which an IST would be performed.

2 The information in this column represents the gauge error permitted by the Code (3 times reference value X Code required accuracy of 2%, for Group A or B Testing).

PUMP RELIEF REQUESTS

10 CFR 50.55a Request Number IST-3-P-2 Rev. 1

Basis for Relief: Relief is requested from the full scale range requirements of ISTB-3510(b)(1) under certain scenarios for CSS pump suction pressures and LPSI pump suction and discharge pressures. For quarterly Group A and B tests, which are performed on miniflow, these gauges meet the Code required limits. However, during refueling outages, the water from the Refueling Water Storage Tanks (RWSTs), which provides suction head to the pumps, is transferred to the refueling canal. This lowers the water level in the RWSTs and thus the reference suction pressure for the Inservice Tests (ISTs). In these circumstances of reduced suction pressure, the gauges do not always meet the ISTB-3510(b)(1) requirements (i.e., they read less than one-third of full scale, See Table 2).

The reference discharge pressure readings for the LPSI pumps are greater than one-third of the instrument range during the Group A miniflow tests conducted quarterly. Comprehensive Pump Tests are conducted biennially in accordance with Table ISTB-3400-1. During these Comprehensive Pump Tests, due to the lower RWST level and the change in system line-up, the reference discharge pressure drops below one-third of full scale of the installed instrumentation. As a consequence, the limits of ISTB-3510(b)(1) are not met during the Comprehensive Pump Tests.

The manufacturer's stated accuracy for each pressure instrument listed in Table 2 exceeds the required accuracy in Table ISTB-3500-1 (+/-2% for Group A and B Tests and +/-0.5% for Comprehensive Tests).

Even though the existing installed station instruments do not meet the Code range requirements of ISTB-3510(b)(1), their overall accuracy exceeds the Code requirements. Thus, the combination of range and accuracy of the installed instrumentation yields a reading that is better than the reading achieved from instruments that meet the minimum Code requirements. The reference values listed in the Tables are based on historical data, and although future values may be lower than the values listed, the overall Code accuracy requirements would be met or exceeded under all conditions under which an IST would be performed.

PUMP RELIEF REQUESTS

10 CFR 50.55a Request Number IST-3-P-2 Rev. 1

TABLE 2

Pump	Parameter	Instrument	Nominal Quarterly Reference[1]	Worst Case Refueling Reference[2]	Instr. Range (Range/Ref. Value)	Error Permitted by Code[3]	As Installed Accuracy at Full Scale (error at full scale)
Containment Spray System Pumps							
P012 P013	Suction Pressure	PI-9087 PI-9085	30 psig	19.7 psig	0-75 (3.8)	0.295 psig	0.25% (0.19 psig)
LPSI Pumps							
P015 P016	Suction Pressure	PI-9081 PI-9083	31 psig	13 psig	0-60 (4.6)	0.195 psig	0.25% (0.15 psig)
P015 P016	Disch Pressure	PI-9082 PI-9084	215 psig	149 psig	0-500 (3.4)	2.235 psig	0.25% (1.25 psig)

8.0 Confirmation of Renewed Applicability

Based on the information provided in the previous 10 CFR 50.55a request (Reference 1), information contained with the NRC approval documents (Reference 2) and the information provided above, the circumstances and basis continue to be applicable to this proposed relief request IST-3-P-2 Rev. 1.

9.0 Duration of Re-Approved 10 CFR 50.55a Request

This request is for the duration of the 3rd 10-year program interval that shall commence on May 1, 2004 and terminate on August 17, 2013.

---

1 Reference values are based on historical data for like pumps. Future values may be lower, but overall Code accuracy requirements would be met or exceeded under all conditions under which an IST would be performed.

2 For the worst case refueling reference, the gauges read below the Code required range (i.e. less than 1/3 of full scale)

3 The information in this column represents the gauge error permitted by the Code (3 times reference worst case refueling value X Code required accuracy of 0.5%, during Comprehensive Testing).

PUMP RELIEF REQUESTS
10 CFR 50.55a Request Number IST-3-P-3 Rev. 1

Proposed Alternative
In Accordance with 10 CFR 50.55a(a)(3)(i)

Hardship or Unusual Difficulty without Compensating Increase in Level of Quality and Safety

1.0 ASME Code Component(s) Affected

Components: Auxiliary Feedwater Pumps:

S21305MP140, S31305MP140
S21305MP141, S31305MP141
S21305MP504, S31305MP504

Class: 3

Quantity: Unit 2: 3 pumps
Unit 3: 3 pumps

2.0 Applicable Code Edition and Addenda

ASME OM Code 1998 Edition, Code for Operation and Maintenance of Nuclear Power Plants, AMSE OMa Code-1999 and ASME OMb Code-2000.

3.0 Applicable Code Requirement

ISTB-5121 (b): The resistance of the system shall be varied until the flow rate equals the reference point. The differential pressure shall then be determined and compared to its reference value. Alternatively, the flow rate shall be varied until the differential pressure equals the reference point and the flow rate determined and compared to the reference flow rate value.

ISTB-5121 (c): Where system resistance cannot be varied, flow rate and pressure shall be determined and compared to their respective reference values.

PUMP RELIEF REQUESTS
10 CFR 50.55a Request Number IST-3-P-3 Rev. 1

4.0 Reason for Request

Relief is requested from the requirement to measure pump flow during the performance of Group A testing of Auxiliary Feedwater (AFW) pumps. Group A testing of these pumps is performed using the minimum flow recirculation lines not equipped with instrumentation to provide the measurement of pump flow as required by the Code. The pump minimum flow recirculation line must be used when these pumps are tested on a quarterly interval during power operation because this is the only flow path available that does not challenge the normal operation of the Unit. Minimum flow lines are not designed for pump testing purposes.

Each Unit has 3 AFW pumps. It is estimated to cost more than $90,000 annually to install temporary flow measurement devices to support quarterly Group A testing for the pumps on both Units. Installation of six permanent flow devices for both Units on the Auxiliary Feedwater miniflow lines is estimated to cost more than $400,000. Therefore, the requirement to install temporary or permanent instrumentation to meet the Code requirements imposes an undue burden for the information that would be gained.

5.0 Proposed Alternative and Basis for Use

Proposed Alternative: Group A quarterly testing of the AFW pumps will be performed on mini-flow recirculation measuring the differential pressure across the pump in lieu of measuring flow.

NOTE: Pump flow rate will be measured during performance of biennial Comprehensive pump test when an instrumented flow path is available.

Basis for Use: The AFW pumps each have an non-instrumented minimum-flow path that can be utilized for the respective Group A tests. The minimum flow lines used for these pumps provide a fixed resistance flow path from the pump discharge to the Condensate Storage Tank (T-121) and then back to the suction of each pump. During the performance fo the quarterly Group A pump testing, pump differential pressure and vibration parameters are measured and trended. This provides a reference value for differential pressure that can be duplicated during subsequent tests in accordance with OM-ISTB-3300(d).

PUMP RELIEF REQUESTS
10 CFR 50.55a Request Number IST-3-P-3 Rev. 1

The performance of Group A pump tests using a fixed resistance flow path is an acceptable alternative to the Code requirements as per NUREG-1482, NRC Staff Position 9, 'Pump Testing Using Minimum-Flow Return Line With or Without Flow Measuring Devices." This methodology provides for the acquisition of repeatable differential pressure and vibration measurement, which is an adequate means of monitoring pump degradation.

Therefore, the cost of installing either temporary or permanent flow instrumentation imposes an undue burden without a compensating increase in the level of quality and safety.

6.0 Duration of Re-Approved 10 CFR 50.55a Request

This request is for the duration of the 3rd 10-year program interval that shall commence on May 1, 2004 and terminate on August 17, 2013.

7.0 References

NUREG-1482, Guidelines for Inservice Testing at Nuclear Power Plants, November 1993.

DOCUMENTATION OF NEW REFERENCE

UNIT _____

MODE _____

DATE _____

TIME _____

PUMP EQUIPMENT NUMBER _____

PUMP NAME _____

1.0 USE OF THIS ATTACHMENT

This Attachment must be used if this test represents a new reference. For guidance, see Sections 6.5.3, 6.5.4 or 6.5.5 of the main body of this procedure. Fill in the information below and include this attachment with the Record of Inservice Testing of the pump when it is provided to Supervision for review.

2.0 PROCEDURE FOR DOCUMENTING THE ESTABLISHMENT OF A NEW REFERENCE PUMP TEST — **PERFORMED BY INITIALS**

2.1 If this is a reference Test and no approved NRC Pump Relief Request exists in this program procedure, then ensure the following for each instrument used for the IST (excluding vibration instrumentation):

2.1.1 For analog instruments, the full-scale range of each instrument shall not be greater than three times the reference value. _____ ENGINEERING

2.1.2 For digital instruments, the reference value shall not exceed 70% of the calibrated range of the instruments. _____ ENGINEERING

2.2 Review the test data, comparing it with the previous reference and manufacturer's data and establish the new pump test data represents acceptable pump performance.

Previous Reference Test Record Number _____

Current Test Record Number _____

_____ ENGINEERING

DOCUMENTATION OF NEW REFERENCE (Continued)

2.3 Provide an explanation of the differences between the new reference data and the old reference data (check one):

Normal differences expected as a result of variations in nominal performance, consistent with manufacturer's data. ☐

OR

Explain below (use additional sheets of paper or attach a memo to file, if necessary). ☐

_____

_____

_____

_____

_____

_____

_____

_____

_____

_____

_____

_____

_____

_____

2.4 Notify Maintenance Engineering - Reliability Engineering Enshare Database Administrator of new reference test. Specify Equipment ID, Test Type and Reference test Date/Time.

PERFORMED BY: _____ / _____ / _____
Engineer Name / Signature / Date

APPROVED BY: _____ / _____ / _____
Supervisor Name / Signature / Date

MINIMUM PUMP PERFORMANCE TO ACHIEVE SAFETY ANALYSIS COMPLIANCE

1.0 REQUIREMENTS

1.1 Pump performance parameters identified in the following reference drawings shall be met as a minimum during IST. If these values are not met, the pump is considered to not meet the Safety Analysis assumptions for the performance of the safety systems.

1.2 The Code requirements in Attachment 1 to this procedure shall be met in cases where the Safety Analysis requirements of this Attachment are less restrictive.

1.3 Accordingly, when evaluating a Pump IST, the individual conducting the test identifies the Code limits as shown on Attachment 1 and then reviews the safety analysis limits from the below references. The most restrictive limits shall be recorded on the pump test record and used for evaluation of the pump performance.

2.0 PUMP PERFORMANCE REFERENCES

NOTE: The subscript "r", as used below, indicates the reference value measured during the reference test.

2.1 Centrifugal Pumps:

The Acceptable Range for ΔP and flow [Q] is
0.90 to 1.10 ΔP_r or Q_r for Group B test,
0.90 to 1.10 ΔP_r or Q_r for Group A test,
0.94 to 1.03 ΔQ_r for Comprehensive test,
0.93 to 1.03 ΔP_r for Comprehensive test.

PUMP	REFERENCE*
HIGH PRESSURE SAFETY INJECTION PUMPS	
S2(3)1204MP017 S2(3)1204MP018 S2(3)1204MP019	Drawing 41064, Rev. 1

Technical Specification Surveillance SR 3.5.2.5 also requires the following minimum performance for HPSI Pumps:

PUMP	DEVELOPED HEAD (FT)
S21204MP017	≥ 1737 ft
S21204MP018	≥ 1737 ft
S21204MP019	≥ 1737 ft
S31204MP017	≥ 1737 ft
S31204MP018	≥ 1737 ft
S31204MP019	≥ 1737 ft

MINIMUM PUMP PERFORMANCE TO ACHIEVE SAFETY ANALYSIS COMPLIANCE

2.0 PUMP PERFORMANCE REFERENCES (Continued)

PUMP	REFERENCE
CONTAINMENT SPRAY PUMPS	
S2(3)1206MP012 S2(3)1206MP013	Drawing 41063
LOW PRESSURE SAFETY INJECTION PUMPS	
S2(3)1204MP015 S2(3)1204MP016	Drawing 41065

Technical Specification Surveillance SR 3.5.2.5 also requires the following minimum performance for LPSI Pumps:

PUMP	DEVELOPED HEAD (FT) AT MINIFLOW
S21204MP015	≥ 406.1 ft
S21204MP016	≥ 406.1 ft
S31204MP015	≥ 396 ft
S31204MP016	≥ 396 ft

PUMP	REFERENCE
COMPONENT COOLING WATER PUMPS	
S2(3)1203MP024 S2(3)1203MP025 S2(3)1203MP026	Drawing 41066
COMPONENT COOLING WATER MAKEUP PUMPS	
S2(3)1203MP1018 S2(3)1203MP1019	Drawing 41080
AUXILIARY FEEDWATER PUMPS	
S2(3)1305MP140 S2(3)1305MP141 S2(3)1305MP504	Drawing 41061
AUX. BUILDING EMERGENCY CHILL WATER PUMPS	
SA1513MP160 SA1513MP162	Drawing 41075
BORIC ACID MAKEUP (BAMU) PUMPS	
S2(3)1218MP174 S2(3)1218MP175	Drawing 41069

MINIMUM PUMP PERFORMANCE TO ACHIEVE SAFETY ANALYSIS COMPLIANCE

2.0 PUMP PERFORMANCE REFERENCES (Continued)

2.2 Positive Displacement Pumps (Reciprocating):

The Acceptable Range for P and flow [Q] is
0.93 to 1.10 P_r for Group A test,
0.95 to 1.10 Q_r for Group A test,
0.93 to 1.03 P_r for Comprehensive test,
0.95 to 1.03 Q_r for Comprehensive test.

PUMP	REFERENCE
REACTOR CHARGING PUMPS	
S2(3)1208MP190	Drawing 41062
S2(3)1208MP191	
S2(3)1208MP192	

2.3 Vertical Line Shaft Centrifugal Pumps:

The Acceptable Range for ΔP and flow [Q] is
0.95 to 1.10 ΔP_r or Q_r for Group A test,
0.95 to 1.03 ΔP_r or Q_r for Comprehensive test.

DIESEL FUEL OIL TRANSFER PUMPS

PUMP	REFERENCE
S2(3)2421MP093	Drawing 41068
S2(3)2421MP094	
S2(3)2421MP095	
S2(3)2421MP096	
SALT WATER COOLING PUMPS	
S2(3)1413MP112	Drawing 41067
S2(3)1413MP113	
S2(3)1413MP114	
S2(3)1413MP307	

ENGINEERING REVIEW OF PUMP INSERVICE TEST

UNIT _____

MODE _____

DATE _____

TIME _____

PUMP EQUIPMENT NUMBER _____

PUMP NAME _____

1.0 USE OF THIS ATTACHMENT

PERFORMED BY
INITIALS

This Attachment must be used for the documentation of the review of Pump Inservice Tests conducted by Operations. For guidance, see Sections 6.5.3, 6.5.4 or 6.5.5 of the main body of this procedure. Engineer and Engineering Supervisor are PQS T3EN16 qualified. _____

PQS Qualifications **VERIFIED BY:** _____

2.0 PROCEDURE FOR DOCUMENTING THE REVIEW OF THIS COMPLETED PUMP INSERVICE TEST

2.1 If this is a reference Test, verify the test is flagged as such in PMDS. Additionally, complete and attach an Attachment 5, "Documentation of New Reference" from this procedure. Otherwise mark this step N/A. _____ ENGINEERING

2.2 Review the Pump Test information on PMDS or equivalent. _____ ENGINEERING

ENGINEERING REVIEW OF PUMP INSERVICE TEST

PERFORMED BY
INITIALS

NOTES: (1) If additional guidance is needed on the following, refer to either ISTB, Section 6.5.9 of this procedure, and/or Attachments 1, 2 and 6 of this procedure.

(2) YELLOW in PMDS signifies a WARNING, and includes those code-required points that place a pump in ALERT. RED is used to signify those parameters that make a pump inoperable.

2.2.1 If this test resulted in ALERT or REQUIRED ACTION status for the pump, verify an AR has been initiated. Otherwise, mark N/A.

AR _____

_____
ENGINEERING

2.2.2 If this test resulted in ALERT status for the pump, verify an AR assignment has been initiated to the IST Coordinator to update PMDS to reflect the ALERT status. Otherwise, mark N/A.

_____
ENGINEERING

2.2.3 If this test resulted in ALERT status for the pump, verify an AR assignment has been initiated to the OPS Surveillance Coordinator to place the pump in ALERT. Otherwise, mark N/A.

_____
ENGINEERING

2.2.4 Other measured parameters that are designated by YELLOW in PMDS or show anomalous or unusual trends should have an evaluation performed and documented, either included with the IST record or via a referenced AR. Mark N/A if not applicable.

AR _____

_____
ENGINEERING

ENGINEERING REVIEW OF PUMP INSERVICE TEST

PERFORMED BY
INITIALS

2.2.5 **REVIEW RESULTS:**

RANGE	CHECK ONE BOX
NORMAL	☐
ALERT	☐
REQUIRED ACTION	☐

_____
ENGINEERING

2.2.6 Record any applicable ARs, NCRs, or MOs. Otherwise mark N/A.

AR _____

NCR _____

MO _____

_____
ENGINEERING

2.2.7 If acceptable, approve the IST record in PMDS. If the test was not valid, the rest of this attachment may be marked N/A. |

_____
ENGINEERING

2.3 Print a hard copy of trend graphs from the PMDS data and make annotations of any anomalous or unusual trends. (See Reference 2.5.9 for additional guidance.) Include the annotated graphs in the test package with this Attachment, Attachment 5 (if required), and a printout of the IST Pump Test Record. |

_____
ENGINEERING

2.4 Sign the hard copy (printed or typed name and signature) of the IST record, and forward the package to the appropriate supervisor for review and approval. |

_____
ENGINEERING

2.5 If acceptable, approve the PMDS IST record. |

_____
ENGR. SUPV.

2.6 If acceptable, approve the hard copy IST record.

_____
ENGR. SUPV.

ENGINEERING REVIEW OF PUMP INSERVICE TEST

	PERFORMED BY INITIALS
2.7 Notify the SRO Operations Supervisor of the test results. Initial Notification should be by telephone or in person.	_____ ENGINEERING
2.8 Provide notification (hard copy, e-mail or FAX) of the test results to the SRO Operations Supervisor within 96 hours after completion of the test. A completed copy of this Attachment may be used for the notification.	_____ ENGINEERING
2.9 Provide the complete package to the IST Coordinator.	_____ ENGINEERING

Enclosure 2

Procedure SO23-V-3.5, Revision 26

Inservice Testing of Valves Program

Inservice Testing of Valves Program

TABLE OF CONTENTS

REFERENCE USE
QA PROGRAM AFFECTING
50.59 DNA/72.48 DNA

ATTACHMENTS

Inservice Testing of Valves Program

1.0 OBJECTIVES

1.1 To establish the requirements for pre-service and inservice testing to assess the operational readiness of valves and pressure relief devices (and their actuating and position indicating systems) in accordance with Units 2 and 3 Technical Specifications and Licensee Controlled Specifications.

1.2 To establish test intervals, parameters to be measured and evaluated, acceptance criteria and requirements for corrective action, and records.

1.3 To meet the requirements of 90055, ASME OM Code, Sections ISTA, ISTC and Appendix I, and DBD-SO23-TR-IS3.

2.0 References

2.1 NRC Commitments

2.1.1 Document 90055, Pump and Valve Inservice Testing Database, SONGS, Units 2 & 3

2.1.2 OM Appendix I, 1998 Edition through 2000 Addenda, Inservice Testing of Pressure Relief Devices in Light-Water Reactor Nuclear Power Plants

2.1.3 OM-ISTC, 1998 Edition through 2000 Addenda, Inservice Testing of Valves in Light-Water Reactor Nuclear Power Plants

2.1.4 OM-ISTA, 1998 Edition through 2000 Addenda, General Requirements

2.1.5 Units 2 and 3 Technical Specifications 5.5.2.10

2.1.6 Units 2 and 3 Licensee Control Specifications (LCS) 5.0.103.2.6

2.1.7 Topical Quality Assurance Manual (TQAM), Chapter 7.G, ASME Code Program Scope, Responsibilities and Program Controls, latest revision

2.1.8 Updated Final Safety Analysis Report (UFSAR)

2.1.9 NRC Generic Letter 89-04 (NRC GL 89-04), Guidance on Developing Acceptable Inservice Testing programs, April 3, 1989

2.1.10 10CFR50, § 50.55a, Codes and Standards

2.1.11 10CFR50, § 50.55a(f), Inservice Testing Requirements

2.1.12 10CFR50, Appendix J, Primary Reactor Containment Leakage Testing for Water-Cooled Power Reactors ("Appendix J")

2.1.13 Generic Letter 91-18 (NRC GL 91-18), Information to Licensees Regarding Two NRC Inspection Manual Sections on Resolution of Degraded and Nonconforming Conditions and on Operability, November 7, 1991

2.1.14 Letter from A. E. Scherer of SCE to NRC, Request for Proposed Alternative Testing for Check Valves Internally Mounted in Motor Operated Valves, January 28, 2000

2.1.15 Letter Stephen Dembek (NRC) to H.B Ray(SCE), Inservice Testing (IST) Program - Relief Request For Alternative Testing For Certain Check Valves, March 16, 2000

2.1.16 Letter Stephen Dembek (NRC) to H.B Ray (SCE), Letter Stephen Dembek (NRC) to H.B Ray(SCE), San Onofre Nuclear Generating Station (SONGS) Units 2 and 3 – Risk Informed Inservice Testing Program for Pumps and Valves, March 27, 2000

2.2 Orders

2.2.1 SO123-IN-1, Inservice Inspection Program

2.3 Procedures

2.3.1 SO23-V-5.15, Inservice Testing (IST) Coordination and Trending

2.3.2 SO123-XX-1 ISS2, Action Request/Maintenance Order Initiation and Processing

2.3.3 SO123-XXI-1.11.11, Engineering Support Personnel (ESP) Training Program Description

2.3.4 SO23-V-3.13, Containment Penetration Leak Rate Testing

2.3.5 SO123-V-5.22, Valve Program

2.3.6 SO123-V-5.22.3, Pressure Relief Valve Program

2.3.7 SO123-V-5.22.5, Check Valve Program

2.4 Operating Instructions

2.4.1 SO123-0-20, Use of Procedures

2.4.2 SO123-0-23, Control of System Alignments

2.5 Other

2.5.1 Inservice Testing Topical Report, Design Bases Document, DBD-SO23-TR-IS3, latest revision

2.5.2 Letter, J. G. Partlow, NRC, to All Licensees, etc, Minutes of the Public meetings on Generic Letter 89-04, October 25, 1989

2.5.3 NUREG 1482, Guidelines for Inservice Testing at Nuclear Power Plants, April 1995

3.0 Prerequisites

NOTE: Reference to NDMS with a PC is the preferred method to verify which version of the Procedure and TCNs are current.

3.1 Before using this document, verify the revision and any issued TCNs and/or ECs (Editorial Corrections) are current by using one of the following methods:

3.1.1 Access the Nuclear Document Management System (NDMS) (preferred method).

3.1.2 Check it against a Corporate Documentation Management-SONGS (CDM-SONGS) controlled copy and any issued TCNs/ECs.

3.1.3 Contact CDM-SONGS by telephone or through counter inquiry.

3.1.4 Obtain a user-controlled copy of this procedure from CDM-SONGS or NDMS.

3.2 Verify level of use requirements on the first page of the document.

3.3 IST Coordinator shall be PQS ENGIST qualified.

3.4 Engineers performing IST activities should have completed T3EN16 training.

4.0 PRECAUTIONS

4.1 Testing required in this program procedure shall not be conducted in Modes or under conditions that place the Plant in an unsafe condition. Likewise, care shall be exercised that no test will be conducted so a failure of the test would put the plant in an unsafe condition.

4.2 Special care must be exercised to ensure the allowed test interval is not exceeded. The specified FREQUENCY is met if the surveillance is performed within 1.25 times the interval specified in the FREQUENCY, as stated in Technical Specification Surveillance SR 3.0.2. The twenty-five percent (25%) interval extension is allowed to accommodate plant conditions that may not be suitable for conducting a surveillance (such as transient conditions or other surveillance in progress). It also provides flexibility for refueling interval surveillance. "Appendix J" test extensions are allowed under Appendix J Option-B per SO23-V-3.13, Section 6.3, Note 1.

5.0 CHECKLIST(S)

5.1 None

6.0 PROCEDURE

6.1 General Information

6.1.1 Scope

.1 The Inservice Testing of Valves Program delineated herein covers a ten (10) year interval commencing on May 1, 2004 and terminating on August 17, 2013.

.2 The collection and review of data trends to detect component degradation is governed by SO23-V-5.15.

.2.1 This program procedure applies to the third 120-month interval for San Onofre Units 2 and 3.

.3 This Program is applicable to safety related components including, but not limited to ASME Class 1, 2 and 3. Certain non-ASME components are included in this Program as recommended and discussed in NRC GL 89-04, Position 11, IST Program Scope, and NUREG 1482, paragraph 2.2, Criteria for Selecting Pumps and Valves for the IST Program. Attachment 2 shows "NA" as the Code Class to identify Non-Code Valves.

NOTE: For some non-ASME Section III valves, testing is not in full conformance with OM-ISTC. Where testing departs from the OM-ISTC rules, the testing is consistent with the safety significance of the non-code valve and consistent with GL 89-04, Question 53, and NUREG 1482, Section 2.2. See the valve-by-valve discussion of these cases in Attachment 3.

6.1.1 (continued)

.4 The active or passive valves covered in this program procedure are those, which are required to perform a specific function in shutting down a reactor to the cold shutdown condition, in maintaining the cold shutdown condition, or in mitigating the consequences of an accident.

.5 The pressure relief devices covered are those identified in accordance with the 90055 document [Reference 2.1.1]

.6 This procedure may include the testing of components in addition to those mandated by 90055, DBD-SO23-TR-IS3, and OM-ISTA-1100, but shall, as a minimum, require testing of at least all of the components (meeting the above scope description) in those references.

.7 The Check Valve Program, and its interrelationship with the IST Program are defined in the SO123-V-5.22.5, "Check Valve Program." [Reference 2.3.6]

.8 This program procedure lists testing required to be performed under various implementing procedures.

.9 Acceptance Criteria and test conditions are specified in the implementing procedures and the Inservice Testing Database.

6.1.2 Exclusions

.1 The following are excluded from the scope of this program provided the valves are not required to perform a specific function as specified above [Reference 2.1.3, OM-ISTC-1200]:

- Valves used only for operating convenience such as vent, drain, instrument, and test valves;
- Valves used only for system control, such as pressure regulating valves;
- Valves used only for system or component maintenance.

6.1.2 (continued)

.2 External control and protection systems responsible for sensing plant conditions and providing signals for valve operation are excluded from the requirements of this program.

.3 Skid-mounted valves are excluded from this program provided they are tested as part of the major component and are justified to be adequately tested.

.4 Category A and B safety and relief valves are excluded from the requirements of Step 6.6.1 (ISTC-3700), Valve Position Verification and Step 6.6.2 (ISTC-3500), Inservice Tests for Category A and B Valves.

6.1.3 APPLICATION OF RISK INFORMED METHODOLOGY

.1 On March 27, 2000 the NRC approved the use of a full program Risk-Informed Inservice Testing Program at San Onofre. The programmatic requirements of that request are detailed in Attachment 1, Risk Informed IST Program Description.

.2 The Risk Informed Approach may be used to augment test methodology and/or determine test frequencies in lieu of the methods and frequencies required by OM-ISTC and as described in the body of this procedure.

.3 Once fully implemented, Attachment 1, Risk Informed IST Program Description, will be fully integrated into the body of this procedure.

.4 The IST Coordinator shall maintain records that support the Risk Informed Inservice Testing Program. The Coordinator shall make available, on demand, a detailed listing of current test frequencies and credited methodology until such time that the Risk Informed Program is fully implemented and appropriate listing are available either via the Inservice Testing database or this procedure as appropriate.

6.2 Terminology

NOTE: Many of the definitions in this section are derived from OM-ISTA and OM-ISTC. Consistency with this Reference provides a common basis for understanding among (a) ourselves, as the owner, (b) the ASME documents with which we must comply and (c) the individuals who audit our Program, such as the NRC, etc.

6.2.1 *Active valves* Valves that are required to change obturator position to accomplish the required function(s) as specified in this program procedure, above.

6.2.2 *Cold shutdown* The Code uses Cold Shutdown "CS" for all modes other than Operating and Refueling and therefore ("CS" as used in the IST Program) includes Technical Specification Modes 3, 4, or 5. All valves identified for Cold Shutdown testing are not testable in all modes. Accordingly, applicable implementing procedures (Operating Instructions) will specify which valves can be tested in a given Mode. (For additional information, see the NOTE following step 6.6.2.4)

6.2.3 *Exercising* The demonstration based on direct visual or indirect positive indications that the moving parts of a valve function.

6.2.4 *Full-stroke time* The time interval from initiation of the actuating signal to the indication of the end of the operating stroke.

6.2.5 *Inservice Testing Coordinator* An individual appointed by the Manager, Maintenance Engineering, to coordinate the procedures, program and testing associated with the inservice testing program in accordance with SO123-V-5.15.

6.2.6 *Inservice Testing Database* The electronic record of IST requirements and IST results. Inservice Testing Database is presently accessed via NCDB application on SONGS network and new application PMDS will be used in the future.

6.2.7 *Nonintrusive testing* Testing performed on a component (such as acoustic emission, magnetic flux measurement, ultrasonic examination, or radiography) without disassembling or disturbing boundary of component.

6.2.8 *Plant operation* The conditions of startup, operation at power, hot standby, and reactor cool down, as defined by the plant Technical Specifications.

6.2.9 *Obturator* Valve closure member (disk, gate, plug, ball, etc.).

6.2.10 *Operational readiness* The ability of a valve to perform its intended function.

6.2.11 *Passive valves* Valves that maintain obturator position and are not required to change obturator position to accomplish the required function(s), as specified under 6.1.1, above.

6.2.12 *Preservice test period* The period of time following completion of construction activities related to the valve and prior to first electrical generation by nuclear heat in which component and system testing takes place.

6.2.13 *Reactor coolant system pressure isolation* That function which prevents inter-system over-pressurization between the reactor coolant system and connected low-pressure systems.

6.2.14 *Reference values* One or more values of test parameters measured or determined when the equipment is known to be operating acceptably.

6.2.15 *Monitoring* Continuous or periodic observation or measurement to ascertain the performance or obtain characteristics of a system, structure, or component.

6.2.16 *Power-operated relief valve* A power-operated valve that can perform a pressure relieving function and is remotely actuated by either a signal from a pressure sensing device or a control switch. A power-operated relief valve is not capacity certified under ASME Section III overpressure protection requirements.

6.2.17 *Skid Mounted* Valves integral to or that support operation of major components, even though these valves may not be located directly on the skid. In general, these valves are supplied by the manufacturer of the major component. Examples include:

(a) diesel fuel oil valves;

(b) steam admission and trip throttle valves for high-pressure coolant injection turbine driven pumps;

(c) steam admission and trip throttle valves for auxiliary feedwater turbine driven pumps;

(d) solenoid-operated valves provided to control an air-operated valve

6.2.18 *Risk Informed IST Program* An NRC approved methodology for determining the test methodology and frequency based on blending the deterministic performance characteristics and the probabilistic risk assessment of a component to arrive at a recommended test interval and test strategy. An Expert Panel is employed to validate the proposed regimen by consensus of the panel.

6.2.19 *SRO Operations Supervisor* Any Operations individual holding an SRO license (active or inactive) who has qualified to the position of Shift Manager or Control Room Supervisor [Unit 2/3 Operations Division Manuals, ODM-1, Operations Dictionary]

6.2.20 *Test Interval* This program uses the test interval definitions in LCS 5.0.103.2.6.

6.3 Valve Categories

6.3.1 Valves within the scope of this program shall be placed in one or more of the following categories.

NOTE: When more than one distinguishing category characteristic is applicable, all requirements of each of the individual categories are applicable, although duplication or repetition of common testing requirements is not necessary. [OM-ISTC-1300 and ISTC-1400(b)]

.1 *Category A* - valves for which seat leakage is limited to a specific maximum amount in the closed position for fulfillment of their required function(s), as specified in 6.1.1, above.

.2 *Category B* - valves for which seat leakage in the closed position is inconsequential for fulfillment of the required function(s), as specified in 6.1.1, above.

.3 *Category C* - valves which are self actuating in response to some system characteristic, such as pressure (relief valves) or flow direction (check valves) for fulfillment of the required function(s), as specified in 6.1.1, above.

NOTE: Category D is defined in the Code; however, there are no Category D valves at San Onofre and therefore this program procedure omits all discussion thereof.

6.3.1 (continued)

.4 *Category D* - valves that are actuated by an energy source capable of only one operation, such as rupture disks or explosively actuated valves.

.5 *Category AC* - All check valves are Category "C"; however, some require that their seat leakage be limited to a specific amount. In these cases they are indicated as Category "AC".

NOTES: (1) The categorization of a check valve is not dependent solely on the function performed by the valve, such as whether it is a containment isolation valve. If any of the considerations from 90055 indicate that Category "C" testing may not be adequate, the check valve may be assigned Category "AC" and receive a seat leak test as required by this program [See Reference 2.5.2, Question 107].

(2) Many of the valves in the listing of Attachment 2 indicate that the Code Class is "NA". These valves are non-Code valves that have a safety function and therefore require periodic surveillance. They are listed here in the IST Program for convenience; however, a missed or failed surveillance will not constitute a violation of Technical Specification 5.5.2.10 or LCS 5.0.103.2.6. See Generic Letter 89-04, Response to Question #53, and NUREG 1482, Section 2.2.

6.4 Responsibilities

6.4.1 SO123-IN-1, identifies the responsibilities of each station organization for performance of inservice testing under this Program.

.1 The Manager, Maintenance Engineering, is responsible for this Program and its implementation at the San Onofre Site.

.2 The Design Engineering Organization (DEO) is responsible for scope determination of the Inservice Testing Program for valves. DEO documents their methodology for performing this determination and the results of their analyses in their document 90055 (Reference 2.1.1).

NOTE: Additional guidance for establishment of Program Scope is included in DBD-SO23-TR-IS3, OM-ISTA and ISTC, UFSAR, and NRC Generic Letter 89-04.

6.4.2 Maintenance Engineering shall issue changes to this procedure as necessary to reflect the current program for Inservice Testing of valves. When this program procedure is changed, implementing procedures should be updated to reflect these changes prior to the next due date for the affected testing in the plant. Affected site divisions shall receive a Site Procedures Impact assignment to assess these changes. [Reference 2.1.4, OM-ISTA-1500(c)]

.1 Operations, Maintenance Engineering, and Maintenance Divisions shall maintain their respective implementing procedures and Repetitive Maintenance Orders applicable to the testing for which they are responsible and shall keep these documents current to reflect the up-to-date program requirements (Reference 2.2.1). [Reference 2.1.4, OM-ISTA-1500(c)]

.2 Following the issuance of each significant change to the inservice testing program, the IST Coordinator shall alert Nuclear Licensing with a request to transmit the change to the NRC. (See Reference 2.5.2, page 5.)

6.4.3 When the edition and addendum of the Code are adopted by SONGS such as at the beginning of a new ten year interval, the following individuals and agencies shall be notified and provided a copy of the new program: NRC, State of California (See Reference 2.1.7). In addition, the following documents may need updating and shall be reviewed and updated as necessary: UFSAR (Reference 2.1.8), TQAM (Reference 2.1.7), Technical Specifications (Reference 2.1.5), Inservice Testing Topical DBD (Reference 2.5.1), and Valves Relief Requests.

6.4.4 The Maintenance Engineering Division shall specify acceptance criteria and required test conditions. [Reference 2.1.3, OM-ISTC-1400(b)]

6.4.5 Each Division responsible for the creation of the records required by this program procedure shall be responsible for formally transmitting these records to CDM on a timely basis for CDM retention.

6.4.6 ASME OM Code Responsibilities/Requirements

.1 The Maintenance Engineering and Design Engineering Divisions shall assure the design and arrangement of system components includes allowances for adequate access and clearances for conduct of the examination and tests. [Reference 2.1.4, OM-ISTA-1500(b)]

.2 For their scope of work under this program, each division shall be responsible for planning and scheduling their own tests, including quarterly testing, cold shutdown testing and reactor refueling testing. [Reference 2.1.4, OM-ISTA-1500(c)]

.3 Implementing procedures identifying the methods of testing and the components to be tested shall be prepared, issued and controlled by the responsible Divisions for their testing [Reference 2.1.4, OM-ISTA-1500(d)]

.4 Qualification of personnel who perform and evaluate the Inservice Testing shall be verified by the responsible Divisions for their testing. [Reference 2.1.4, OM-ISTA-1500(e) and SO123-XXI-1.11.11]

.5 Each Division shall perform the required Inservice Testing for which their Division is responsible. [Reference 2.1.4, OM-ISTA-1500(f) and SO123-IN-1]

.6 Each Division shall record their Inservice Testing results such that the results provide a basis for evaluation and facilitate comparison with the results of subsequent Inservice Testing. [Reference 2.1.4, OM-ISTA-1500(g)]

.7 Each Division shall provide evaluation of the Inservice Testing results for which they are responsible. [Reference 2.1.4, OM-ISTA-1500(h)]

NOTE: The Maintenance Engineering Division Engineers, Supervisors and the IST Coordinator may be called upon to assist in the evaluation of valve operability when test results indicate a potential problem. See step 6.6.4 below.

.8 Maintenance of adequate Inservice Testing records, such as test data and description of procedures used and evidence of personnel qualifications, shall be the responsibility of each Division for the testing under its responsibility. [Reference 2.1.4, OM-ISTA-1500(i)]

6.4.6 (continued)

.9 Corporate Document Management Center (CDM) shall retain Inservice Testing records for the service lifetime of the components. [Reference 2.1.4, OM-ISTA-1500(j)]

.10 Design Engineering Divisions shall determine the appropriate Code Class for each component of the plant, identification of the system boundaries for each class of components subject to test or examination, and the components exempt from testing or examination requirements. [Reference 2.1.4, OM-ISTA-1500(a)]

.11 Design Engineering Divisions shall include in the plant design all necessary instrumentation, test connections, flow instruments, or any other provisions which are required to fully comply with the requirements of this procedure. [Reference 2.1.3, OM-ISTC-1400(a)]

.12 Design Engineering Divisions shall ensure that the application, method, and capability of each nonintrusive technique is qualified. [Reference 2.1.3, OM-ISTC-1400(c)]

Remainder of page left blank.

6.5 Testing Requirements

NOTE: Attachment 2 identifies all valves subject to test, the OM category of each valve, and the tests to be performed. Attachment 3 provides justifications for testing at other than quarterly intervals. [Reference 2.1.3, OM-ISTC-9200]

6.5.1 Preservice Testing

NOTES: (1) This program procedure applies to the record 120-month interval for San Onofre Units 2 and 3. The initial preservice test period is past for the valves in this program. Accordingly, many of the valves *did* not have reference values for stroke times from a preservice examination stroke test. In these cases, reference stroke times *were* identified from past test data when the valves were known to be operating properly. *These reference values are noted in the records.*

(2) Preservice Examination for our plant is conducted on newly installed components as a result of plant design modifications

.1 Each valve shall be tested during the preservice test period as required by OM-ISTC. These tests shall be conducted under conditions as near as practical to those expected during subsequent inservice testing. Only one preservice test of each valve is required except in the following cases [Reference 2.1.3, OM-ISTC-3100]:

.2 Any valve that has undergone maintenance that could affect its performance after the preservice test shall be tested in accordance with step 6.5.2.5, Effect of Valve or Actuator Replacement, Repair, and Maintenance on Reference Values. [Reference 2.1.3, OM-ISTC-3310]

.3 Safety and relief valves shall meet the preservice test requirements of OM Appendix I. [Reference 2.1.2 and 2.1.3, OM-ISTC-3100(b)]

6.5.2 Reference Values

.1 Reference values shall be determined from the results of preservice testing or from the results of inservice testing. These tests shall be performed under conditions as near as practicable to those expected during subsequent inservice testing. [Reference 2.1.3, OM-ISTC-3300]

6.5.2 (continued)

.2 Reference values shall only be established when the valve is known to be operating acceptably. If the particular parameter being measured can be significantly influenced by other related conditions, then these conditions shall be analyzed. [Reference 2.1.3, OM-ISTC-3300]

.3 When Reference values are initially established or changed, they shall be documented in a controlled manner.

NOTE: The new reference value may be used as soon as the record discussed in paragraphs 6.5.2.3 and 6.5.2.4 (which includes an explanation of the reasons for the new value) is approved.

.4 When reference values are changed, the reason shall be documented, a statement of the adequacy of the new value shall be provided, as well as appropriate level of review and approval of the new value before it is used for valve stroke time evaluation.

.5 Effect of Valve or Actuator Replacement, Repair, and Maintenance on Reference Values [Reference 2.1.3, OM-ISTC-3310]

NOTES: (1) Adjustments, removal or replacement of stem packing, limit switches, control system valves, bonnet, stem assembly, actuator, obturator, or other control system components are examples of maintenance that could affect valve performance parameters such as stroke time.

(2) See Attachment 6, GUIDELINES ON POST-MAINTENANCE RTS INSERVICE TESTING, to sequence establishing a valid reference following stroke-affecting work.

.5.1 When a valve or its control system has been replaced, repaired, or has undergone maintenance that could affect the valve's performance, then a new reference value shall be determined or the previous value reconfirmed by an inservice test run prior to the time it is returned to service or immediately if not removed from service, to demonstrate performance parameters which could be affected by the replacement, repair, or maintenance are within acceptable limits.

.5.2 Deviations between the previous and new reference values shall be identified and analyzed.

6.5.2 (continued)

.5.3 Verification that the new values represent acceptable operation shall be documented in the record of tests and/or in the IST Database electronic record.

.5.4 Safety and Relief valves shall be tested as required by the replacement, repair, and maintenance requirements of ASME OM Appendix I. [Reference 2.1.2]

.5.5 Establishing an Additional Set of Reference Values

.5.1 If it is necessary or desirable for some reason, other than stated in paragraph 6.5.2.5, to establish additional references values, an inservice test shall first be run at the conditions of an existing set of reference values, or, if impractical, at the conditions for which the new reference values are required, and the results analyzed.

.5.2 If operation is acceptable in accordance with paragraphs 6.6.2.6 and 6.6.3, a second test shall be performed under the new conditions as soon as practical. The results of the second test shall establish the additional reference values.

.5.3 Whenever additional reference values are established, the reasons for doing so shall be justified and documented in the record of tests and/or in the IST Database electronic record. [Reference 2.1.3, OM-ISTC-3320]

Remainder of page left blank.

6.5.3 Inservice Test Requirements

.1 Inservice testing in accordance with this program procedure shall commence when the valves are required to be operable to fulfill their required function(s), as specified in 6.1.1, above. [Reference 2.1.3, ISTC-3200]

NOTE: When more than one distinguishing category characteristic is applicable, all requirements of each of the individual categories are applicable, although duplication or repetition of common testing requirements is not necessary.

.2 Active and passive valves in the categories defined under Section 6.3, shall be tested in accordance with the sections specified in Table 1, INSERVICE TEST REQUIREMENTS [Reference 2.1.3, Table OMb-ISTC-3500-1]:

Table 1 INSERVICE TEST REQUIREMENTS

Category	Valve Function	Leakage Test Procedure	Exercise Test Procedure [Note (1)]	Position Indication Verification
A	Active	See 6.6.5, below. ISTC-3600	See 6.6.2, below. ISTC-3510	See 6.6.1 below. ISTC-3700
A	Passive	See 6.6.5, below. ISTC-3600	None	
B	Active	None	See 6.6.2, below. ISTC-3510	
B	Passive	None	None	
C (Safety and Relief)	Active	See 6.6.6.1, below. [Notes (2)(3)]	See 6.6.6.1, below. ISTC-3510, ISTC-5240	
C (Check valves) [Note (4)]	Active	None [Note (3)]	See 6.6.6, below. ISTC-3510	

NOTES:

(1) Note additional requirement for fail-safe valves. See 6.6.1.6 below. [Reference 2.1.3, OMa-ISTC-3560]

(2) Leak test as required for OM Appendix I

(3) When more than one distinguishing category characteristic is applicable, all requirements of each of the individual categories are applicable, although duplication or repetition of common testing requirements is not necessary.

(4) If a "check" valve used for a pressure relief device is capacity certified, then it shall be classified as a pressure or vacuum relief device. If a check valve used to limit pressure is not capacity certified, then it shall be classified as a check valve.

6.5.4 Establishing or Revising Valve Stroke Time Limits

NOTES: (1) The "Inservice Testing Database Change Record", Attachment 5, is used for both modifications and new additions to acceptance criteria on the valve list.

(2) Stroke time limits, "MAX OPR" (as used in the Inservice Testing Database), and Limiting values for stroke time are synonymous. That is they have the same meaning. The term "protected value" is clarified in Attachment 2, note 3.

.1 New stroke time limits are established and documented using Attachment 5, "Inservice Testing Database Change Record". New stroke time limits are recorded and controlled in the Inservice Testing Database in accordance with the requirements of that system. An independent verification by a second engineer is required to assure correctness of the change and the basis used.

.2 Periodically, limits are reassessed and modified as necessary following review by engineering of the historical trends for stroke time. This is accomplished approximately biennially and the objective of the Engineering review is to establish reasonable stroke time limits based on historical performance where this is appropriate. Guidance in NRC GL 89-04 is used as the basis of this review.

.3 Affected valves and their safety analysis or Technical Specification limits for stroke time are listed in Attachment 4 to this procedure. These "protected" limits may not be exceeded unless the supporting design calculations and Technical Specifications / FSAR are revised, as applicable.

6.5.5 Testing Abbreviations

.1 The tests conducted under this program are listed in Attachment 2 and are abbreviated as follows:

Abbreviation	Definition
AJ	"Appendix J" Seat Leakage Test
AT	Seat Leakage Test
BMC	Manual Stroke Closed
BMO	Manual Stroke Closed
BDTC	Check Valve Bidirectional Test Closed
BDTO	Check Valve Bidirectional Test Open
BMPC	Partial Manual Stroke Closed
BMPO	Partial Manual Stroke Open
BTC	Stroke Test Closed
BTO	Stroke Test Open
BTPC	Partial Stroke Test Closed
BTPO	Partial Stroke Test Open
CVTC	Check Valve Stroke Test Closed
CVTO	Check Valve Stroke Test Open
CVPO	Partial Check Valve Stroke Test Open
DIAG	Power Operated Valve Diagnostic testing
EXER	Power Operated Valve non-timed stroke exercise
FSTC	Fail Safe Test Closed
FSTO	Fail Safe Test Open
MSTR	Master requirement record used for scheduling tests in support of RIIST stagger testing
PIT	Position Indication Test
RVT	Relief Valve Test

6.5.6 Test intervals

.1 Intervals are identified in Attachment 2 are abbreviated as follows:

Abbreviation	Definition
QT	Quarterly (at least every 92 days)
1A	Annual (at least every 366 days)
2A	Biennial (at least every 731 days)
CS	Cold shutdown
RR	Reactor Refueling
SP	Special Interval - Individually Defined
4A	4 year (at least every 1460 days)
4S	4 year stagger test within group
5A	5 year interval
5S	5 year stagger test within group
6S	6 year stagger test within group
8S	8 year stagger test within group
10A	10 year interval
10S	10 year stagger test within group

6.6 Testing Methods

NOTE: The specific test intervals identified in the steps below may be modified per the RIIST relief request. The IST Coordinator maintains a list of the RIIST intervals.

6.6.1 Valve Position Verification [REFERENCE 2.1.3, ISTC-3700]

.1 Valves with remote position indicators shall be observed locally at least once every 2 years to verify that valve operation is accurately indicated.

.2 Where practicable, this local observation should be supplemented by other indications such as use of flow meters or other suitable instrumentation to verify obturator position. These observations need not be concurrent.

.3 Where local observation is not possible, other indications shall be used for verification of valve operation.

6.6.2 Inservice Tests For Category A and B Valves

.1 **Exercising Test Frequency.** Active Category A and B valves shall be exercised nominally every 3 months, except as discussed in Attachments 2 and 3. [Reference 2.1.3, OMb-ISTC-3510]

.1.1 Power-operated relief valves shall be exercise tested once per fuel cycle. [Reference 2.1.3, OMb-ISTC-3510]

NOTE: "Every 3 months" is the same as quarterly, or every 92 days.

.2 **Exercising Requirements.** Category A and B valves shall be tested as follows [Reference 2.1.3, ISTC-3521, and NUREG 1482, Section 3.1.1]:

.2.1 Full-stroke exercising of Category A and B valves during operation at power to the position(s) required to fulfill its function(s);

.2.2 If full-stroke exercising during operation at power is not practicable, it may be limited to part-stroke during operation at power and full-stroke during cold shutdowns;

6.6.2 (continued)

.2.3 If exercising is not practicable during operation at power, it may be limited to full stroke exercising during cold shutdowns;

.2.4 If exercising is not practicable during operation at power and full stroke during cold shutdowns is also not practicable, it may be limited to part stroke during cold shutdowns, and full stroke during refueling outages;

.2.5 If exercising is not practicable during operation at power or cold shutdowns, it may be limited to full stroke during refueling outages;

.2.6 Valves full stroke exercised at cold shutdowns shall be exercised during each cold shutdown, except as specified in the following paragraph. Such exercise is not required if the time period since the previous full stroke exercise is less than 3 months.

.3 **Cold Shutdown Testing:**
Valve exercising during cold shutdowns shall commence within 48 hours of achieving cold shutdown, and continue until all testing is complete or the plant is ready to return to power. For extended outages, testing need not be commenced in 48 hours provided all valves required to be tested during cold shutdown will be tested prior to or as part of plant startup. However, it is not the intent of this requirement to keep the plant in cold shutdown in order to complete cold shutdown testing.

.3.1 Cold Shutdown testing is required every 92 days when the Unit(s) is in a mode that supports testing. Testing need not be performed on out of service equipment, however testing required to support a mode change must be complete prior to the mode change per step 6.6.2.8 below. For extended outages this means that all cold shutdown testing must be completed and current prior to entering a mode in which the equipment must be Operable.

.4 **Refueling Interval Testing:**
All valve testing required to be performed during a refueling outage shall be completed prior to returning the plant to operation at power.

NOTE: Before beginning power ascension, Responsible Divisions normally complete the tests of those valves tested at each refueling outage. However, for valves that can only be tested during power ascension, power level is raised and mode changes are made in accordance with Technical Specification requirements and then the applicable valves are tested when the plant conditions allow. If maintenance has been performed on a valve during the outage, the valve is considered inoperable until completing post-maintenance testing in accordance with the TS operability requirements. See NUREG 1482, Para. 3.1.1.2.

6.6.2 (continued)

.5 **Valve Obturator Movement:**
The necessary valve obturator movement shall be determined by exercising the valve while observing an appropriate indicator, such as indicating lights which signal the required change of obturator position, or by observing other evidence, such as changes in system pressure, flow rate, level, temperature, or nonintrusive examination techniques, that reflect change of obturator position. [Reference 2.1.3, OM-ISTC-3530]

.6 **Power-Operated Valve Stroke Testing**

.6.1 Where applicable, requirement records of the Inservice Testing Database identify the limiting value(s) of full-stroke time of each power-operated valve. Criteria are established in accordance with paragraph 6.5.4, above. [Reference 2.1.3, OM-ISTC-5121(b), 5131(b), 5141(b), 5151(b)]

.6.2 The stroke time of all power-operated valves shall be measured to at least the nearest second. [Reference 2.1.3, OM-ISTC-5121(c), 5131(c), 5141(c), 5151(c)]

.6.3 The valve stroke time is measured with a stopwatch or appropriate timing device. The timing device is started when the valve is actuated and stopped when the backlight for the desired valve position is the only one illuminated.

.6.4 The testing organization (typically the Operations Division) shall record any abnormality or erratic action and shall evaluate the valve stroke regarding the need for corrective action. Maintenance Engineering may be called upon to assist in this evaluation. [Reference 2.1.3, OM-ISTC-5121(d), 5131(d), 5141(d), 5151(d), 9120]

6.6.2 (continued)

.6.5 Active valves shall have their stroke times measured when exercised in accordance with Step 6.6.2. [Reference 2.1.3, OM-ISTC-5121(a), 5131(a), 5141(a), 5151(a)]

.7 **Valves in Regular Use:**
Valves which operate in the course of plant operation at a frequency which would satisfy the exercising requirements of this Program Procedure need not be additionally exercised, provided that the observations otherwise required for testing are made and analyzed during such operation and are recorded in the plant records at intervals no greater than specified under 6.6.2.1, above. [Reference 2.1.3, OMa-ISTC-3550]

.7.1 **Fail-Safe Valves.**
Valves with fail-safe actuators shall be tested by observing the operation of the actuator upon loss of valve actuating power in accordance with the exercising frequency specified under 6.6.2.1, above. [Reference 2.1.3, OMa-ISTC-3560]

.7.2 Fail-safe testing is required only for those valves that are required to be (a) stroke tested, and (b) for which the fail-safe feature is a required safe function of the valve.

.8 **Valves in Systems Out of Service.**
For a valve in a system declared inoperable or not required to be operable, the exercising test schedule need not be followed. Within 3 months prior to placing the system in an operable status, the valves shall be exercised and the schedule followed thereafter in accordance with this program procedure. [Reference 2.1.3, OMa-ISTC-3570]

Remainder of page left blank.

6.6.2 (continued)

.9 **Power-Operated Relief Valves**
Power-operated relief valves shall meet the requirements of Section 6.6.2 for the specific Category B valve type and Section 6.6.6 for Category C valves. [Reference 2.1.3, OM-ISTC-5110]

.10 **Valve Testing Requirements**
Testing shall be performed in the following sequence or concurrently. If testing in the following sequence is impractical, it may be performed out of sequence, and a justification shall be documented in the record of tests for each test or in the test plan: [Reference 2.1.3, OMb-ISTC-5111]

leakage testing

stroke testing

position indication testing

The pressure sensing device shall be calibrated in accordance with the Owner's quality assurance program. [Reference 2.1.3, OMb-ISTC-5111]

.11 **Leak Testing:**
Seat tightness of the PORV shall be verified by leak testing in accordance with the requirements of OM Appendix I. [Reference 2.1.3, OMb-ISTC-5112]

.12 **Valve Stroke Testing [Reference 2.1.3, OMb-ISTC-5113]**
Active valves shall have their stroke times measured when exercised in accordance with Section 6.6.2. [Reference OM-ISTC-3500]

.13 **Manual Valves:** [Reference 2.1.3, OMa-ISTC-3540]

.13.1 Manual valves shall be full-stroke exercised at least once every 2 years, except where adverse conditions may require the valve to be tested more frequently to ensure operational readiness. Any increased testing frequency shall be specified by the owner. The valve shall exhibit the required change of obturator position.

6.6.2 (continued)

.13.2 Harsh service environment, lubricant hardening, corrosive or sediment laden process fluid, or degraded valve components are some examples of adverse conditions.

.13.3 If a valve fails to exhibit the required change of obturator position, the valve shall be immediately declared inoperable. [Reference 2.1.3, OM-ISTC-5210]

.13.4 Valves equipped with remote position indication shall be tested in accordance with Step 6.6.1. [Reference 2.1.3, OM-ISTC-5210]

6.6.3 Stroke Time Acceptance Criteria

.1 Stroke test results shall be compared to the initial reference values or reference values established in accordance with step 6.5.2, above. [Reference 2.1.3, OM-ISTC-5122, 5132, 5142, 5152]

.1.1 Electric-motor-operated valves with reference stroke times greater than 10 seconds shall exhibit no more than ± 15 % change in stroke time when compared to the reference value. [Reference 2.1.3, OM-ISTC-5122(a)]

.1.2 Other power-operated valves with reference stroke times greater than 10 seconds shall exhibit no more than ± 25 % change in stroke time when compared to the reference value. [Reference 2.1.3, OM-ISTC-5132(a), 5142(a), 5152(a)]

.1.3 Electric-motor-operated valves with reference stroke times less than or equal to 10 seconds shall exhibit no more than ± 25 % or ± 1 second change in stroke time, whichever is greater, when compared to the reference value. [Reference 2.1.3, OM-ISTC-5122(b)]

.1.4 Other power-operated valves with reference stroke times less than or equal to 10 seconds shall exhibit no more than ± 50 % change in stroke time when compared to the reference value. [Reference 2.1.3, OM-ISTC-5132(b), 5142(b), 5152(b)]

.1.5 Valves that stroke in less than 2 seconds may be exempted from the limiting values above. In such cases the maximum limiting stroke time shall be 2 seconds. [Reference 2.1.3, OM-ISTC-5122(c), 5132(c), 5142(c), 5152(c)]

6.6.3 (continued)

.1.6 This is summarized in Table 2 REFERENCE RANGE LIMITS FOR VALVE STROKE TIME TESTING:

Table 2 REFERENCE RANGE LIMITS FOR VALVE STROKE TIME TESTING

Valve Actuator Type	Reference Stroke Time [T] Range	Limits of Reference Range
Electric-Motor Operated	T > 10 sec	± 15 % of T
Other Power Operated	T > 10 sec	± 25 % of T
Electric-Motor Operated	2 < T ≤ 10 sec	± 25 % of T
Other Power Operated	2 < T ≤10 sec	± 50 % of T
Any Operator Type	T < 2 sec	2 sec

6.6.4 Stroke Time Corrective Action

NOTE: The requirements to initiate an Action Request (AR) apply to the IST Program. See SO123-XX-1 ISS2 for AR initiation criteria.

.1 **Stroke Time Exceeding the Limiting Value:** If a valve fails to exhibit the required change of obturator position or exceeds the limiting values of full-stroke time, see paragraph 6.6.2.6, above, the valve shall be immediately declared inoperable and an AR shall be initiated by the Division discovering the inoperability. [Reference 2.1.3, OM-ISTC-5123(a), 5133(a), 5143(a), 5153(a)]

Remainder of page left blank.

6.6.4 (continued)

.1.1 The AR shall be validated, the operability assessment completed and Operations notified as required by SO123-XX-1 ISS2.

CAUTION	96-hour evaluation period does NOT apply to POST-MAINTENANCE ISTs; New Reference shall be set OR Current Reference must be confirmed BEFORE THE VALVE IS DECLARED OPERABLE. [Reference 2.1.3, OM-ISTC-5123(b), 5133(b), 5143(b), 5153(b)] See Step 6.5.2.5.1.

.2 **Stroke Time Outside the Reference Range:** Valves with measured stroke times that do not meet the acceptance criteria discussed under 6.6.3, above, but are less than the maximum stroke time limit, shall be immediately retested or declared inoperable. An AR shall be initiated by the Division discovering the inoperability. [Reference 2.1.3, OM-ISTC-5123(b), 5133(b), 5143(b), 5153(b)]

.2.1 If the valve is retested and the second set of data also does not meet the acceptance criteria, the data shall be analyzed within 96 hours to verify the new stroke time represents acceptable valve operation, or the valve shall be declared inoperable. Although 96 hours is allowed, SONGS policy is to complete the analysis as soon as is practical. See discussion in Section 6.7. [Reference 2.1.3, OM-ISTC-5123(b), 5133(b), 5143(b), 5153(b)]

.2.2 If the second set of data meets the acceptance criteria, the cause of the initial deviation shall be analyzed and the results documented in the record of tests by referencing the AR containing the evaluation and data. . [Reference 2.1.3, OM-ISTC-5123(b), 5133(b), 5143(b), 5153(b)]

6.6.4 (continued)

.3 **Valves Declared Inoperable:** May be repaired, replaced, or the data may be analyzed to determine the cause of the deviation and to show the valve to be operating acceptably. [Reference 2.1.3, OM-ISTC-5123(c), 5133(c), 5143(c), 5153(c)]

.3.1 If valve operability is based upon analysis, the results of the analysis shall be in the record of tests by referencing the AR number containing the evaluation and data. [Reference 2.1.3, OM-ISTC-5123(d), 5133(d), 5143(d), 5153(d)]

.3.2 When corrective action is required as a result of tests made during cold shutdown, the condition shall be corrected before startup.

.4 **Post-Maintenance Testing:** Before returning a repaired or replacement valve to service, a test demonstrating satisfactory operation shall be performed. [Reference 2.1.3, OM-ISTC-5123(e), 5133(e), 5143(e), 5153(e)]

.4.1 When a valve or its control system has been replaced, repaired, or has undergone maintenance that could affect the valve's performance, then a new reference value shall be determined or the previous value reconfirmed by an inservice test run prior to the time it is returned to service or immediately if not removed from service, to demonstrate performance parameters which could be affected by the replacement, repair, or maintenance are within acceptable limits (See step 6.5.2.5.1).

.4.2 Use Attachment 6, GUIDELINES ON POST-MAINTENANCE RTS INSERVICE TESTING, to sequence establishing a valid reference value (either NEW or RE-CONFIRMED) following stroke-affecting work.

6.6.5 Valve Seat Leakage Rate Test

.1 **Scope.**
Category A valves shall be leakage tested, except valves which function in the course of plant operation in a manner that demonstrates functionally adequate seat leak-tightness need not be additionally leakage tested. In such cases, the valve record shall provide the basis for the conclusion that operational observations constitute satisfactory demonstration. [Reference 2.1.3, OM-ISTC-3610]

.2 **Containment Isolation Valves.**
Category A valves, which are containment isolation valves, shall be tested in accordance with Federal Regulation 10CFR50, "Appendix J" (Reference 2.1.12). Containment isolation valves with a leakage requirement based on other functions shall be tested in accordance with 6.6.5.3, below. Examples of these other functions are reactor coolant system pressure isolation valves and certain Owner-defined system functions such as inventory preservation, system protection, or flooding protection. [Reference 2.1.3, OM-ISTC-3620]

.2.1 Leakage rate measurements are to be compared with previous measurements and with the permissible leakage rates specified using SO23-V-3.13. The acceptance criterion (permissible Leak Rate) for each valve can be determined by taking the "0.6La" and subtracting the leak rates of all penetrations in the "Appendix J" Program except the valve under test. These are available from the records created in accordance with "Appendix J". The result is the seat leakage acceptance criterion of the valve under test in standard cubic centimeters per minute or other appropriate units.

6.6.5 (continued)

NOTE: Seat leakage limits that appear in the requirements records of the Inservice Testing Database for "Appendix J" tests, test type "AJ", are maintenance threshold limits only and do not necessarily define the test pass/fail (or operability) limits determined using the calculation in the above paragraph.

.2.2 The test medium used for "Appendix J", Containment Penetration leak rate tests, is specified in SO23-V-3.13 (Reference: 2.3.4).

.3 **Leakage Rate for Other Than Containment Isolation Valves.** Category A valves, which perform a function other than containment isolation, shall be seat leakage tested to verify their leak-tight integrity. Valve closure prior to seat leakage testing shall be by using the valve operator with no additional closing force applied. [Reference 2.1.3, OM-ISTC-3630]

.3.1 *Frequency.* Valve Seat Leakage tests shall be conducted at least once every 2 years. [Reference 2.1.3, OM-ISTC-3630(a)]

NOTE: For test type "AJ", test interval are determined by performance, design features, service conditions, and safety impact per 10CFR50 "Appendix J" Option B. A 25% extension maybe applied to the test interval under Option B (Reference 2.3.4).

.3.2 Differential *Test Pressure.* Valve seat leakage tests shall be made with the pressure differential in the same direction as when the valve is performing its function, with the following exceptions [Reference 2.1.3, OM-ISTC-3630(b)]:

.3.3 Globe-type valves may be tested with pressure under the seat.

.3.4 Butterfly valves may be tested in either direction, provided their seat construction is designed for sealing against pressure on either side.

.3.5 Double-disk gate valves may be tested by pressurizing between the disks.

6.6.5 (continued)

.5.1 Leakage tests involving pressure differentials lower than function pressure differentials are permitted in those types of valves in which service pressure will tend to diminish the overall leakage channel opening, as by pressing the disk into or onto the seat with greater force. Gate valves, check valves, and globe-type valves, having function pressure differential applied over the seat, are examples of valve applications satisfying this requirement. When leakage tests are made in such cases using pressures lower than function maximum pressure differential, the observed leakage shall be adjusted to the function maximum pressure differential value. This adjustment shall be made by calculation appropriate to the test media and the ratio between test and function pressure differential, assuming leakage to be directly proportional to the pressure differential to the one-half power.

.3.6 Valves not qualifying for reduced pressure testing as defined above shall be tested at full maximum functional pressure differential.

.3.7 *Seat Leakage Measurement.*
Valve seat leakage shall be determined by one of the following methods [Reference 2.1.3, OM-ISTC-3630(c)]:

.3.8 Measuring leakage through a downstream telltale connection while maintaining test pressure on one side of the valve; or

.3.9 Measuring the feed rate required to maintain test pressure in the test volume or between two seats of a gate valve, provided the total apparent leakage rate is charged to the valve or valve combination or gate valve seat being tested, and that the conditions required by paragraph 6.6.5.3.2, above, are satisfied; or

.3.10 Determining leakage by measuring pressure decay in the test volume, provided the total apparent leakage rate is charged to the valve or valve combination or gate valve seat being tested, and that the conditions required by paragraph 6.6.5.3.2, above, are satisfied.

6.6.5 (continued)

.3.11 *Test Medium.*
The test medium shall be specified by the Test Implementing Procedure, in those cases where it is not obvious, such as in system piping where either gas and water may be present during normal system operation. [Reference 2.1.3, OM-ISTC-3630(d)]

.3.12 *Analysis of Leakage Rates.*
Leakage rate measurements shall be compared with the permissible leakage rates specified by the implementing procedure for a specific valve or valve combination. If leakage rates are not otherwise determined, for implementing procedures, the following rates shall be used [Reference 2.1.3, OM-ISTC-3630(e)]:

.3.13 for water 0.5D gal/min (80.1d ml/sec) or 5 gal/min (315.4 ml/sec), whichever is less, at function pressure differential ;

.3.14 for air, at function pressure differential, 7.5D standard ft^3/day (0.54d std. m^3 /day)

WHERE: D = nominal valve size, in.

d = nominal valve size, cm.

.4 *Corrective Action.*
Valves or valve combinations with leakage rates exceeding the values specified by the above criteria (or the implementing procedure for the leakage test) shall be declared inoperable and either repaired or replaced. [Reference 2.1.3, OM-ISTC-3630(f)]

.4.1 A retest demonstrating acceptable operation shall be performed following any required corrective action before the valve is returned to service. [Reference 2.1.3, OM-ISTC-3630(f)]

.5 *Establish or Revising Valve Leakage Rate Limits.* New leak rate limits are established and documented using Attachment 5, "Inservice Testing Database Change Record". New leak rate limits are recorded and controlled in the Inservice Testing Database in accordance with the requirements of that system. An independent verification by a second engineer is required to assure correctness of the change and the basis used.

6.6.6 Inservice Tests For Category C Valves

.1 **Safety Valve and Relief Valve Tests.**
Safety and Relief Valves listed in Attachment 2 to this program procedure shall be tested in accordance with the inservice testing requirements of OM Appendix I. [Reference 2.1.3 and 2.5.1, DBD-SO23-TR-IS3]

.2 Requirements for Testing Additional Safety and Relief Valves:

.2.1 "Valve Group" as it applies to relief valves means relief valves of the same manufacturer, type, system application, and service media. [Reference 2.1.2, OM Appendix I-1200]

.2.2 Additional valves (following a test failure) shall be tested in accordance with the following requirements: [Reference 2.1.2, OM Appendix I-1330(c), 1360(c)]

- For each valve tested for which the as found set pressure (first test actuation) exceeds the greater of either the ± tolerance limit of the owner established set-pressure acceptance criteria or ± 3% of valve nameplate set pressure, two additional valves shall be tested from that same valve group.

- If the as-found set-pressure of any of the additional valves exceeds the criteria noted therein, then ALL remaining valves of that same valve group shall be tested.

- The Owner shall evaluate cause and effect of valves that fail to comply with the set-pressure acceptance criteria. Using this evaluation the Owner shall determine the need for testing in addition to the minimum tests specified to address any generic concerns which could apply to the same or other valve groups.

.3 **Check Valve Exercising Test Frequency.**
Check Valves listed in Attachment 2 shall be exercised nominally every 3 months as follows, except as discussed in Attachments 2 and 3. [Reference 2.1.3, OMb-ISTC-3510, ISTC-3522, ISTC-5221]

6.6.6 (continued)

.4 **Check Valve Exercising Requirements.**
During operation at power, each check valve shall be exercised or examined in a manner which verifies obturator travel by using the methods in the Steps below. Each check valve exercise test shall include open and close tests. Open and close tests need only be performed at an interval when it is practicable to perform both tests. Test order (e.g., whether the open test precedes the close test) shall be determined by the Owner. Open and close tests are not required to be performed at the same time if they are both performed within the same interval. [Reference 2.1.3, ISTC-3522(a)]

.4.1 If exercising is not practicable during operation at power, it shall be performed during cold shutdowns. [Reference 2.1.3, ISTC-3522(b)]

.4.2 If exercising is not practicable during operation at power and cold shutdowns, it shall be performed during refueling outages. [Reference 2.1.3, ISTC-3522(c)]

.5 Valves exercised at shutdowns shall be exercised during each shutdown, except as specified in Step 6.6.6.5.2. Such exercise is not required if the interval since the previous exercise is less than 3 months. During extended shutdowns, valves that are required to perform their intended function (See ISTA-1100) shall be exercised every 3 months, if practicable. [Reference 2.1.3, ISTC-3522(d)]

.5.1 Valve exercising shall commence within 48 hour of achieving cold shutdown and continue until all testing is complete or the plant is ready to return to operation at power. For extended outages, testing need not be commenced in 48 hours if all valves required to be tested during cold shutdown will be tested before or as part of plant start up. However, it is not the intent of this requirement to keep the plant in cold shutdown to complete cold shutdown testing. [Reference 2.1.3, ISTC-3522(e)]

.5.2 All valve testing required to be performed during a refueling outage shall be completed before returning the plant to operation at power. [Reference 2.1.3, ISTC-3522(f)]

NOTE: Before beginning power ascension, Responsible Divisions normally complete the tests of those valves tested at each refueling outage. However, for valves that can only be tested during power ascension, power level is raised and mode changes are made in accordance with Technical Specification requirements and then the applicable valves are tested when the plant conditions allow. If maintenance has been performed on a valve during the outage, the valve is considered inoperable until completing post-maintenance testing in accordance with the TS operability requirements. See NUREG 1482, Para. 3.1.1.2.

6.6.6 (continued)

.6 **Check Valves In Regular Use.**
The rules of Paragraph 6.6.2.7 shall apply to check valve testing for check valves in regular use. [Reference 2.1.3, ISTC-3550]

.7 **Check Valve Obturator Movement.**

.7.1 The necessary valve obturator movement during exercise testing shall be demonstrated by performing both an open and a close test. [Reference 2.1.3, OM-ISTC-5221(a)]

.1.1 Check valves that have a safety function in both the open and close directions shall be exercised by initiating flow and observing that the obturator has traveled to either the full open position or the position required to perform its intended function(s), and verify that on cessation or reversal of flow, the obturator has traveled to the seat.

.1.2 Check valves that have a safety function in only the open direction shall be exercised by initiating flow and observing that the obturator has traveled either the full open position or to the position required to perform its intended function(s), and verify closure.

.1.3 The flow test shall be designed such that degradation of check valve performance can be detected.

6.6.6.7 (continued)

.1.4 Check valves that have a safety function in only the close direction shall be exercised by initiating flow and observing that the obturator has traveled to at least the partially open position, and verify that on cessation or reversal of flow, the obturator has traveled to the seat.

.1.5 The partially open position should correspond to the normal or expected system flow.

.1.6 Observations shall be made by observing a direct indicator (e.g., a position-indicating device) or by other positive means (e.g., changes in system pressure, flow rate, level, temperature, seat leakage, testing, or nonintrusive testing results).

NOTE: Currently there are no check valves in this program that use a mechanical exerciser. Therefore, this program document omits all discussions thereof.

.7.2 **Check Valve Disassembly Testing:**
If the test methods in Step 6.6.6.7.1 and this step are impractical for certain check valves, or if sufficient flow cannot be achieved or verified, a sample disassembly examination program shall be used to verify valve obturator movement. If maintenance is performed on one of these valves that could affect its performance, the post maintenance testing shall be conducted in accordance with Step 6.6.6.7.2.5 [Reference 2.1.3, OM-ISTC-5221(c)]. The sampling program is described in Step 6.6.6.8, below.

.2.1 During the disassembly process, the full-stroke motion of the obturator shall be verified. Full-stroke motion of the obturator shall be reverified immediately prior to completing reassembly. Check valves that have their obturator disturbed before full-stroke motion is verified shall be examined to determine if a condition exists that could prevent full opening or reclosure of the obturator.

.2.2 Examples of check valves valves that have their obturator disturbed before full-stroke motion is verified are spring-loaded lift checks, or check valves with the obturator supported from the bonnet.

6.6.6 (continued)

.2.3 For valves identified in Attachments 2 and 3 that are to be tested by disassembly, the internals shall be visually inspected for worn or corroded parts, and the valve disks shall be manually exercised. It shall be verified the valve is capable of full-stroking and the internals of the valve are structurally sound. This testing shall be conducted at each refueling outage (or at refueling outages on a rotating basis, see paragraph 6.6.6.8 below).

.2.4 Before return to service, valves that were disassembled for examination or that received maintenance that could affect their performance, shall be exercised full- or part-stroke, if practicable, with flow. Those valves shall also be tested for other requirements (e.g., closure verification or leak rate testing) before returning them to service.

NOTE: The IST Coordinator maintains a complete listing of valve groups in the IST Program.

.8 **Sample Disassembly Program for Check Valves:**
When the IST Coordinator determines it is burdensome to disassemble and inspect all applicable valves each refueling outage, a sample disassembly and inspection plan for groups of identical valves in similar applications may be employed in accordance with OM-ISTC-5221(c). [Reference 2.1.3, OM-ISTC-5221(c)]

.8.1 The sample disassembly examination program shall group check valves of similar design, application, and service condition and require a periodic examination of one valve from each group. The details and bases of the sampling program shall be documented and recorded in the test plan.

.8.2 Grouping of check valves for the sample disassembly examination program shall be technically justified and shall consider, as a minimum, valve manufacturer, design, service, size, materials of construction, and orientation.

6.6.6 (continued)

.2.1 Valve grouping should also consider potential flow instabilities, required degree of disassembly, and the need for tolerance or critical dimension checks.

.8.3 At least one valve from each group shall be disassembled and examined at each refueling outage; all valves in each group shall be disassembled and examined at least once every 8 years.

.3.1 If the disassembled valve is not capable of being full-stroke exercised or there is binding or failure of valve internals, the remaining valves in that group must also be disassembled, inspected and manually full-stroke exercised during the same outage. Once this is completed, the sequence of disassembly shall be repeated unless extension of the interval can be justified.

.8.4 Extension of the valve disassembly/inspection interval to one valve every other refueling outage or expansion of the group size above four valves should only be considered in cases of extreme hardship where the extension is supported by actual in-plant data from previous testing. Considerations and methodology for justifying this testing is addressed in NRC GL 89-04, Position 2. This grouping criterion is modified to allow more than 4 valves in a single group when testing is under the auspices of the Risk Informed Relief request.

.9 **Check Valve Disassembly Group Size Reassessment:**
When disassembly/inspection data for a valve group show a greater than 25% failure rate, a determination will be made and documented (for example, in a memo) by the Valve Group Supervisor, assisted by the Component/System Engineer, and IST Coordinator, whether the group size should be decreased or whether more valves from the group should be disassembled during every refueling outage (NRC GL 89-04, Position 2).

.10 **Check Valves in Systems Out of Service.**
Paragraph 6.6.2.8, above applies to check valves in system out of service. [Reference 2.1.3, OMa-ISTC-3570]

.11 **Open Stroke Testing of Check Valves Using Flow.**
Paragraph 6.6.6.7.1 above applies to check valve testing using flow.

6.6.6 (continued)

.12 **Check Valve Non-Intrusive (NI) Testing**

.12.1 NI Testing is considered as an acceptable testing methodology and is a preferred alternative to disassembly for determining the capability of check valves to open, close, and fully stroke. (NUREG 1482, Section 4.1.2). [Reference 2.1.3, OM-ISTC-5221(a)]

.12.2 When using non-intrusive testing techniques in a sampling plan, similar valves may be grouped for testing purposes, not to exceed four valves in a single group, as described in NUREG 1482, Section 4.1.2, and GL 89-04, Position 2.

.12.3 Additional guidance on NI testing techniques is provided in SO123-V-5.22.5. [Reference 2.1.3, ISTC-1400(c); and 2.3.6]

.13 **Series Check Valves in Pairs** [Reference 2.1.3, OM-ISTC-5223]

.13.1 If two check valves are in a series configuration without provisions to verify individual reverse flow closure (e.g., keepfill pressurization valves) and the plant safety analysis assumes closure of either valve (but not both), the valve pair may be operationally tested closed as a unit.

.13.2 If the plant safety analysis assumes that a specific valve or both valves of the pair close to perform the safety function(s), the required valve(s) shall be tested to demonstrate individual valve closure.

NOTE: Conditioning Monitoring in accordance with OM Appendix II has not been implemented at SONGS.

.14 **Check Valve Corrective Action:**
If a check valve fails to exhibit the required change of obturator position, it shall be declared inoperable. A retest showing acceptable performance shall be run following any required corrective action before the valve is returned to service. [Reference 2.1.3, OM-ISTC-5224]

NOTE: If an inoperable check valve safety function is not affected by the inoperable condition, then the component or system served by the inoperable check valve remains operable.

6.6.6 (continued)

.14.1 When corrective action is required as a result of testing during cold shutdown, the condition shall be corrected before startup.

.14.2 Check valves in a sample disassembly program that are not capable of full-stroke movement (i.e., due to binding) or have failed or have unacceptably degraded valve internals, shall have the cause of failure analyzed and the condition corrected. Other check valves in the sample group that may also be affected by this failure mechanism shall be examined or tested during the same refueling outage to determine the condition of internal components and their ability to function.

.2.1 An evaluation should be made to determine if there are valves outside of the sampling group that could be affected by the failure mechanism. Valves that are determined to be directly affected by the failure mechanism should be examined or tested.

.14.3 Series valve pairs tested as a unit in accordance with paragraph 6.6.6.13 that fail to prevent reverse flow shall be declared inoperable, and both valves shall be either repaired or replaced.

.14.4 The results of any analysis shall be in the record of tests by referencing the AR number containing the evaluation and data.

NOTE: The requirements to initiate an AR apply to the IST Program. See SO123-XX-1 ISS2 for AR initiation criteria.

.15 **Vacuum Breaker Valves**
Vacuum breaker shall meet the applicable inservice test requirements of ISTC-5220 and OM Appendix I. [Reference 2.1.3, OM-ISTC-5230 and 2.1.2]

.16 **Rupture Disks**
Rupture disks shall meet the requirements for nonreclosing pressure relief devices of OM Appendix I. [Reference 2.1.3, OM-ISTC-5250 and 2.1.2]

6.6.7 Inservice Tests For Category D Valves

.1 Not applicable. There are no safety-related or important-to-safety Category D valves at SONGS.

6.7 Acceptance Criteria and Corrective Action

6.7.1 Acceptance criteria and corrective actions for Category A, B and C valve testing are contained in the implementing procedures and/or an IST database system, and as described in this program procedure.

6.7.2 During a test, anomalous data with no clear indication of the cause must be attributed to the valve under test. When data is recognized as anomalous, a prompt determination of operability is appropriate with follow-on corrective action as necessary. *Recalibrating test instruments and then repeating valve tests is an acceptable alternative to the corrective action of repair or replacement, but is not an action that can be taken before declaring the valve inoperable.* However, if during a test it is obvious a test instrument is malfunctioning, the test may be halted and the instruments promptly recalibrated or replaced. [See NRC Generic Letter 91-18, "Information to Licensees Regarding ... Operability."]

6.7.3 It is appropriate to validate the data prior to declaring a valve inoperable. **Validation** (verifying the test was conducted using the required system lineup, instruments were not obviously out-of-calibration, a second check of calculations, etc.) **must be completed as soon as practical following completion of data gathering phase of the test when it is probable that the test results do not meet the limiting values for operability.** The validation period is provided to obtain management concurrence that the Inservice Test results are valid and entry into an applicable action statement is required. A retest using recalibrated instrumentation is not allowed as a validation step.

6.7.4 If supervision and the assigned tester conclude that the test is invalid, the test may be invalidated and the test records not used. **IN THIS CASE, A VALID TEST SHOULD BE COMPLETED ON THE VALVE IN QUESTION AS SOON AS POSSIBLE TO CONFIRM VALVE OPERABILITY.** Performing an invalid test in no way absolves those responsible from compliance with the surveillance requirements and schedules of the Technical Specifications (e.g., IST requirements) as they apply to the components under test.

NOTE: NRC POSITION: The NRC guidance on Technical Specification Clock Policy states that when a test result fails to meet the acceptance criterion, regardless of whether the limit is equal to or more conservative than the Technical Specification limit, the valve must be immediately declared inoperable and the Technical Specification Action Statement for the associated system must be entered. In cases where the required action range limit is more conservative than its corresponding Technical Specification limit, the corrective action may not be limited to replacement or repair, but it may consist of analysis to demonstrate that specific performance degradation does not impair operability and that the valve still fulfills its function. A new REFERENCE RANGE and OPERABILITY LIMIT (as necessary) may be established after such analysis which would then allow a new determination of operability. NRC GL 91-18 states: *"The durations specified by the Code for analyzing test results have not been accepted by the NRC for postponing entering a Technical Specification Action Statement.* As soon as the data are recognized exceeding the OPERABILITY LIMIT of full-stroke time for valves, the associated component must be declared inoperable and, if subject to the Technical Specification, the Allowed Outage Time (AOT) specified in the action statement must be started at the time the component was declared inoperable."

6.7.5 If supervision determines the test was valid and the data are outside of the REFERENCE RANGE or exceed the OPERABILITY LIMIT, then supervision shall immediately assure an AR is initiated and validated (including an operability assessment) and notify the SRO Operations Supervisor.

6.8 Instrumentation

6.8.1 Instrumentation including both measuring and test equipment and permanent instrumentation, used for valve testing and examination activities [Reference 2.1.3, OM-ISTC-3800]:

.1 Shall be in the calibration program here at SONGS, with an appropriate recall date for recalibration.

.2 Shall have the accuracy, range, and repeatability characteristics necessary to verify compliance with the requirements of this Program Procedure. [Reference 2.1.3, OM-ISTC-3800(b)]

.3 Instrumentation accuracy shall be considered when establishing valve test acceptance criteria. [Reference 2.1.3, OM-ISTC-3800]

6.8.2 Instrumentation shall not be used for Inservice testing if the recall date has expired.

6.8.3 Instrumentation requirements for safety and relief valve testing are provided in the DBD-SO23-TR-IS3. [Reference: 2.5.1]

7.0 RECORDS AND REPORTS

7.1 Valve Records

7.1.1 It is the responsibility of the record originator to provide the record to CDM for retention. For vendor supplied records and similar non-SCE generated records, the Division in receipt of the record is responsible for providing the record to CDM for retention.

7.1.2 CDM shall maintain a record which shall include the following for each valve tested under this program procedure [Reference 2.1.3, OM-ISTC-9110]:

.1 The manufacturer and manufacturer's model and serial or other unique identification number.

.2 A copy or summary of the manufacturer's acceptance test report if available.

.3 Preservice test results.

NOTE: Limiting value of full stroke time is identified in the Inservice Testing Database.

.4 Limiting value of full-stroke times. [Reference 2.1.3, ISTC-5121(b), ISTC-5131(b), ISTC-5141(b), and ISTC-5151(b)]

7.2 Test Plans
(Program and Implementation Procedures)

7.2.1 CDM shall maintain a record of test plans (Program and Implementation Procedures).

7.2.2 The test plans shall include this program procedure and implementing procedures from each Division for the valve(s) under its responsibility.

NOTE: Limiting value of full stroke time is identified in the Inservice Testing Database.

7.2.3 Documentation of changes in acceptance criteria shall be made using Attachment 5, "Inservice Testing Database Change Record." When this record is completed and implemented, it shall be transmitted to CDM for permanent retention.

7.2.4 Each inservice test plan shall include the following [Reference 2.1.3, ISTC-9200 and 2.1.4, OM-ISTA-3120]:

The edition and addenda of the ASME OM Code that applies to the required tests and examinations [Reference 2.1.4, OM-ISTA-3120(a)];

ASME Code classification of the components and the boundaries of system classification [Reference 2.1.4, OM-ISTA-3120(b)];

Identification of the components subject to tests and examination [Reference 2.1.4, OM-ISTA-3120(c)];

OM Code category each valve [Reference 2.1.3, OM-ISTC-9200(a)];

Code requirements for each components and the test or examination to be performed [Reference 2.1.4, OM-ISTA-3120(d)];

Code requirements for each component that are not being satisfied by the tests or examinations [Reference 2.1.4, OM-ISTA-3120(e)];

Code Cases and proposed for use and the extent of their application [Reference 2.1.4, OM-ISTA-3120(f)];

Test or examination frequency or a schedule for performance of tests and examinations, as applicable [Reference 2.1.4, OM-ISTA-3120(g)];

Justification for deferral of stroke testing as documented in Alternative Testing Justifications (ATJs) [Reference 2.1.3, OM-ISTC-9200(b)];

Details and bases of the check valve sample disassembly examination program, such as grouping characteristics, frequency, and justification for not performing an exercise test to at least a partially open position after reassembly or periodic exercising in accordance with Step 6.6.6.4 [Reference 2.1.3, OM-ISTC-9200(c)];

Bases for testing series check valve pairs as a unit [Reference 2.1.3, OM-ISTC-9200(d)].

7.3 Records of Tests

7.3.1 CDM shall maintain a record of each test.

7.3.2 Each Division shall (for the valves under its responsibility) include the following in its records of tests sent to CDM: valve identification (including Unit 2, Common or Unit 3), date of test or examination, reason for test (e.g., post maintenance, routine inservice test or examination, establishing reference values, etc.), test or examination procedure used; values of measured parameters, identification of test equipment used, comparisons with allowable ranges of test values and analysis of deviations, requirement for corrective action, printed (or typed) name and signature of the person or persons responsible for conducting and analyzing the test. [Reference 2.1.4, OM-ISTA-9230]

7.4 Record of Corrective Action

NOTE: The Action Requests (ARs) are the normal vehicle for documenting the record of corrective action.

7.4.1 CDM shall maintain records of corrective action for cases where it is not on secure electronic media (such as ARs, see SO123-XX-1 ISS2).

7.4.2 Each Division shall provide a record of corrective action that includes a summary of the corrective actions made, the subsequent inservice tests, confirmation of operation adequacy, and the printed (or typed) name and signature of the individual responsible for corrective action and verification of results. [Reference 2.1.4, OM-ISTA-9240]

7.5 Documentation of Alternate Testing Justifications (ATJs)

NOTE: ATJs shall be documented and shall be available for review by interested parties. This documentation is available in Attachment 3 to this procedure, however, it is also being converted to a database and will also be available using the Client-Server Platform.

Risk Informed IST Program Description

Risk Informed IST Program Description

1.0 Objective

1.1 This attachment presents an approved alternative to the ASME OM Code Inservice Testing (IST) Program at San Onofre Nuclear Generating Station (SONGS). It is a risk informed process which determines the safety significance and testing strategy of components in the IST Program, and identifies non-ASME IST components (pumps & valves) modeled in the Probabilistic Risk Assessment (PRA) determined to be High Safety Significant Components (HSSCs).

2.0 Required Elements of the Risk Informed Process

2.1 The following elements and their implementation, ensure that the key safety principle discussed in the Regulatory Guide 1.175 are maintained.

2.1.1 Categorize components by Fussell-Vesely (FV) and Risk Achievement Worth (RAW) importance measures based on the San Onofre Nuclear Generating Station (SONGS) 2/3 Living PRA.
(PRA Process)

2.1.2 Blend deterministic and probabilistic data to perform a final importance categorization of components as either Low Safety Significant Component (LSSC), Potentially High (L-H) or High Safety Significant Component (HSSC).
(Integrated Decision Process - IDP)

2.1.3 Develop/Determine Test Frequencies and Test Methodologies for the ranked components.
(Testing Philosophy)

2.1.4 Evaluate cumulative risk impact of new test frequencies and test methodologies to ensure risk reduction or risk neutrality.
(Cumulative Risk Impact)

2.1.5 Develop an implementation plan.
(Implementation)

2.1.6 Develop a Performance Monitoring plan for RI-IST Components.
(Monitoring)

2.1.7 Develop a Corrective Action plan.
(Corrective Action)

Risk Informed IST Program Description

2.1.8 Perform periodic reassessments.
(Periodic Reassessments)

2.1.9 Develop a methodology for making changes to the Risk Informed – Inservice Testing (RI-IST) program.
(Changes to RI-IST)

3.0 PRA Process

3.1 PRA methodology facilitates determination of the risk significance of components based on end states of interest, such as core damage frequency (CDF) and release of radioactivity (e.g., large early release frequency (LERF)).

3.2 The full scope (internal and external events, and shutdown) PRA used to develop the importance measures is adequate for this application, and is complemented by the Integrated Decision Process (IDP). Evaluation of initiating events also includes loss of support systems and other special events such as Loss of Coolant Accident (LOCA), Steam Generator Tube Rupture (STGR), Station Blackout (SBO), and Anticipated Transient without Scram (ATWS).

3.3 The SONGS 2/3 full-scope, all-modes, living PRA will be used to initially categorize components based on risk importance and also used to calculate changes in core damage frequency and large early release frequency. The initial categorization and change in CDF and LERF will be provided to the expert panel as part of the IDP. The quality of the Living PRA will be maintained under a formal PRA change and review process to ensure that the component importance measures and CDF/LERF calculations accurately reflect the as-built design and operation of SONGS 2/3.

3.4 The PRA will be periodically updated (See Section 10.0) to reflect the current plant design, procedures, and programs.

Risk Informed IST Program Description

3.5 Component Ranking

3.5.1 Two figures of merit will be used to initially categorize components: Fussell-Vesely (FV) and Risk Achievement Worth (RAW). For the RI-IST Program, the following criteria will be used to initially rank components for review by the Integrated Decision Process (IDP).

Category	Criteria
High (HSSC)	FV > 0.001
Potentially High (L-H)	FV < 0.001 and RAW > 2
Low (LSSC)	FV < 0.001 and RAW < 2

3.5.2 These CDF and LERF thresholds coupled with the cumulative risk impact evaluation detailed in Section 6.0, ensure that the cumulative risk impact due to changes in test frequencies are within the acceptance guidelines of Regulatory Guides 1.174.

3.6 Methodology/Decision Criteria for PRA

3.6.1 The following describes a methodology that will be used to categorize components in the RI-IST when the program is reassessed. However, only those elements that are significantly affected by the model changes (e.g., design modifications or procedural changes) need to be reviewed in detail using this process. The scope of the review and the justification for it will be documented as part of the IDP. The following steps will be applied by the IDP:

.1 Review FV and RAW importance measures for pumps and valves considered in the PRA against the classification criteria.

.2 Review component importance measures to ensure that their bases are well understood and are consistent with the SONGS specific levels of redundancy, diversity, and reliability.

3.7 PRA Limitations

3.7.1 Address the sensitivity of the results to common cause failures (CCF), assuming all/none of the CCF importance is assigned to the associated component.

3.7.2 Evaluate the sensitivity due to human action modeling. Identify/evaluate proceduralized operator recovery actions omitted by the PRA that can reduce the ranking of a component.

3.7.3 Evaluate the sensitivity of the component classifications to the uncertainty of the component failure probabilities.

Risk Informed IST Program Description

3.7.4 Consider industry history for particular IST components. Review such sources as NRC Generic Letters, Significant Operating Event Report (SOERs), and Technical Bulletins and rank accordingly.

3.7.5 For components with high RAW/ low FV, ensure that other compensatory measures are available to maintain the reliability of the component.

3.7.6 Identify and evaluate components whose performance shows a history of causing entry into LCO conditions. To ensure that safety margins are maintained, consider retaining the ASME test frequency for these components.

3.8 Level II (LERF)

3.8.1 Consider components/systems that are potential contributors to large, early release. Determine LERF FV and RAW for components and/or determine which would have the equivalent of a high FV or low FV /high RAW with respect to LERF and rank accordingly. Also, in order to ensure that containment integrity continues to be maintained, consider:

.1 Containment isolation features that may not directly impact the value of LERF, and

.2 Interfacing systems LOCA that may provide a direct release path outside containment.

3.9 IST Components Not in PRA

3.9.1 Review scenarios involving the "not-modeled" IST components to validate that the components are in fact low risk.

3.10 High-Risk PRA Components Not in the IST Program

3.10.1 Identify, if any, other high risk pumps and valves in the PRA that are not in the IST program but should be tested commensurate with their importance.

3.10.2 Determine whether current plant testing is commensurate with the importance of these valves. If not, determine what test, e.g., the IST test, would be the most appropriate.

Risk Informed IST Program Description

3.11 Other Considerations

3.11.1 Review the PRA to determine that sensitivity studies for cumulative effects and defense in depth have been adequately addressed in the determination of component importance factors.

4.0 Integrated Decision Process

4.1 The purpose of using the Integrated Decision Process (IDP) is to confirm or adjust the initial risk ranking developed from the PRA results, and to provide a qualitative assessment based on engineering judgement and expert experience. This qualitative assessment compensates for limitations of the PRA, including cases where adequate quantitative data is not available.

4.2 The IDP uses deterministic insights, engineering judgement, experience, and regulatory requirements as detailed in this section. The IDP will review the initial PRA risk ranking, evaluate applicable deterministic information, and determine the final safety significance categories. The IDP considerations will be documented for each individual component to allow for future repeatability and scrutiny of the categorization process.

4.3 The scope of the IDP includes both categorization and application. The IDP is to provide deterministic insights that might influence categorization. The IDP will identify components whose performance justifies a higher categorization.

4.4 The IDP will determine appropriate changes to testing strategies. The IDP will identify compensatory measures for potentially high safety significant components, or justify the final categorization. The IDP will also concur on the test interval for components categorized as a Low Safety Significant Component (LSSC).

4.5 The end product of the IDP will be components categorized as LSSC, Potentially High Safety Significant (L-H) or High Safety Significant Component (HSSC).

4.6 In making these determinations, the Integrated Decision Process (IDP) ensures that key safety principles (namely defense-in-depth and safety margins), are maintained. It also ensures the changes in risk for both CDF and LERF are acceptable per the guidelines discussed in Section 3.0 above. The key safety principles are described below.

Risk Informed IST Program Description

4.7 Defense in Depth

4.7.1 The SONGS RI-IST program ensures consistent defense in depth by maintaining strict adherence to seven objectives of the defense in depth philosophy described in Regulatory Guides 1.174 and 1.175. The review and documentation of these objectives are an integral feature of the IDP for future changes to the program. Those objectives are:

.1 A reasonable balance is preserved among prevention of core damage, prevention of containment failure, and consequence mitigation. Multiple risk metrics, including core damage frequency (CDF) and large early release frequency (LERF), will be used to ensure reasonable balance between risk end states (Objective 1).

.2 No changes to the plant design or operations procedures will be made as part of the RI-IST program which either significantly reduces defense-in-depth, barrier independence or places strong reliance on any particular plant feature, human action, or programmatic activity (Objective 2, 5).

.3 The methodology for component categorization, namely the selection of Importance measures and how they are applied and understanding the basic reasons why components are categorized HSSC or LSSC, will be reviewed to ensure that redundancy and diversity are preserved as the more important principles. Component reliability can be used to categorize a component LSSC only when:

.3.1 plant performance has been good, and

.3.2 a compensatory measure or feedback mechanism is available to ensure adverse trends in equipment performance can be detected in a timely manner.

.4 A review will ensure that test frequency relaxation in the RI-IST program occurs only when the level of redundancy or diversity in the plant design or operation supports it. In this regard, all components that have significant contributions to common cause failure will be reviewed to avoid relaxation of requirements on those components with the lowest level of diversity within the system (Objective 3, 4).

Risk Informed IST Program Description

4.7.1 (continued)

.5 Defenses against human errors are preserved by performing sensitivity studies. Sensitivity studies will be performed for human actions to ensure that components which mitigate the spectrum of accidents are not ranked low solely because of the reliability of a human action (Objective 6).

.6 The intent of the General Design Criteria in 10CFRPart 50, Appendix A will be maintained (Objective 7).

4.8 Other Considerations Related To Defense-In-Depth.

4.8.1 When the PRA does not explicitly model a component, function, or mode of operation, a qualitative method may be used to classify the component HSSC, L-H, or LSSC and to determine whether a compensatory measure is required. The qualitative method is consistent with the principles of defense in depth because it preserves the distinction between those components which have high relative redundancy and those which have only high relative reliability.

4.9 Maintain Sufficient Safety Margin

4.9.1 The IDP will perform reviews consistent with Regulatory Guides 1.174 and 1.175 to ensure that sufficient safety margin is maintained when compared to the deterministic IST program. In performing this review, the IDP will consider such things as proposed changes to test intervals and, where appropriate, test methods. The IDP will ensure that the proposed compensatory measures, when required by the program, are effective in maintaining adequate safety margin. To enhance the safety margin, the IDP will also review PRA important components not in the current IST program for potential inclusion in the RI-IST program.

4.10 Categorization Guidelines

4.10.1 The role of the Expert Panel (EP) is crucial in ensuring that the results presented in this submittal are comprehensive. The Panel members consider and ultimately validate the results of all work activities and studies performed by the IST project members. The Panel consists of members with expertise in the following disciplines:

.1 Power plant operations,

.2 Plant maintenance,

.3 Probabilistic risk assessment (PRA) and nuclear safety analysis,

Risk Informed IST Program Description

4.10.1 (continued)

.4 Reliability engineering,

.5 Station technical support (System and Maintenance Engineering),

.6 Design engineering, and

.7 Inservice testing (including OM Code ASME Code Cases).

4.10.2 The above disciplines are considered as required functional disciplines. The participation of these core disciplines is necessary to achieve a Panel quorum at every Panel meeting. Periodic participation by a plant licensing expert and other component or system experts is on an as required basis. Each core member of the Panel shall have at least ten years experience in nuclear power and at least five years site specific experience.

4.10.3 In addition to ensuring an integrated RI-IST effort through active technology transfer, the Expert Panel serves as the central point of decision-making for major technical issues and offers guidance to risk-informed IST project members in performing their work. Further, common membership of several members on the risk-informed IST Expert Panel and the Maintenance Rule Expert Panel, assures consistency in decision bases.

4.10.4 Ultimately, the Panel's principle responsibility is to ensure that the risk ranking information is consistent with plant design, operating procedures, and with plant-specific operating experience. To that end, the Panel members perform each of the following steps:

.1 *Understand the scope of IST and the scope of PRA.* Understand the IST functions for which the assigned ISTs test, the component failure modes modeled by the PRA, and important differences between the two.

.2 *Understand the basis of IST and PRA models and assumptions.* Understand the design basis for the IST function, the basis for the PRA ranking, the concepts of redundancy and reliability, and the concept of common cause failure.

.3 Accept (or reject) the scope and bases of both IST and PRA.

.4 Accept (or reject) the initial PRA ranking.

Risk Informed IST Program Description

4.10.4 (continued)

.5 *Possibly adjust the ranking of components not modeled by the PRA from LSSC to a higher ranking.* Assign compensatory measures if the component is considered to be of low safety significance solely on the basis of component reliability.

.6 *Review the corrective maintenance history.* Understand the basis for the corrective maintenance history. Adjust the ranking if the component is considered to be unreliable in the performance of IST safety functions.

.7 Accept final ranking.

4.10.5 Based on the process outlined above, the Panel makes a qualitative assessment of the risk importance categories that are developed for the components using the PRA results and deterministic insights, plant-specific history, engineering judgments, and probabilistic risk analysis insights. The panel reviews the PRA component risk rankings, compares the PRA and IST functions to ensure consistency with plant design, and analyzes applicable deterministic information in its effort to resolve the final safety significance categorizations for all the IST components under scrutiny.

4.11 Modeled Components/Functions

4.11.1 For modeled components/functions with a FV >0.001 the IDP either confirms the component categorization is HSSC or a justification of conservatism in the PRA model will be developed.

4.11.2 For modeled components/functions with a FV <0.001, but a RAW >2.0, the component will be categorized L-H. The component may be considered LSSC provided a compensatory measure exists that ensures operational readiness and the component's performance is acceptable. If a compensatory measure is not available or the component has a history of poor performance, the component will not be considered for test interval extension and will be considered for potential test method enhancement.

4.11.3 For modeled components/functions with a FV <0.001 and a RAW <2.0, the component will be categorized as LSSC provided the component's performance has been acceptable. For those components with performance problems, a compensatory measure will be identified to ensure operational readiness or the component will be categorized as HSSC.

Risk Informed IST Program Description

4.12 Non-Modeled Components/Functions

4.12.1 For components not modeled or the safety function not modeled in the PRA, the categorization is as follows:

4.12.2 If the sister train is modeled then the component takes that final categorization.

4.12.3 If the component is implicitly modeled in the PRA, the FV and RAW are estimated and the deliberation is as discussed for modeled components/functions.

4.12.4 If the component is not implicitly modeled, the component performance history will be reviewed. For acceptable performance history the component will be categorized as LSSC. For poor performance history, a compensatory measure will be identified to ensure operational readiness and the component categorized as LSSC, or if no compensatory measures are available, categorize the component as HSSC.

4.13 Documentation

4.13.1 Documentation of the IDP will be available for review at the plant site. The basis for risk ranking and component grouping will be entered in the IST data system.

Risk Informed IST Program Description

5.0 Testing Philosophy

5.1 Motor Operated Valves (MOVs)

5.1.1 **HSSC** Testing will be performed in accordance with Code Case OMN-1 and NRC Generic Letter 89-10 and 96-05 commitments. MOV's with a passive function will be tested per the Code of Record as defined in 10CFR50.55a. Additionally, stroke time testing will initially continue per the current code of record at quarterly, cold shutdown, or refueling interval based on the practicability of testing. When sufficient data accumulates and analysis indicates extension of the current stroke interval may be acceptable (i.e., exercising on a refueling interval basis pursuant to OMN-1 paragraph 3.6.3), the Integrated Decision making Process (IDP) determines the acceptability of the extension. The IDP ensures the cumulative risk measures remain consistent with the acceptance guidelines specified in the SCE RI-IST Program including section 4.3.3 of Regulatory Guide 1.175. The IDP also ensures the performance history supports the extension, and monitors to ensure the judgment to extend the interval does not adversely impact component performance.

5.1.2 **L-H** Testing will be performed in accordance with Code Case OMN-1 and NRC Generic Letter 89-10 and 96-05 commitments at an initial interval not to exceed 6 years until sufficient data exist to determine a more appropriate test frequency. MOV's with a passive function will be tested per the Code of Record, except, based on evaluation of design, service condition, performance history, and compensatory actions, at a test frequency not to exceed 6 years (plus a 25% margin based on a 2 year frequency – see footnote 2 on page 66) and exercised at least once during a refueling cycle per OMN-1, Paragraph 3.6.1. Seat leakage testing, if required, will be per the Code of record, except at a test interval not to exceed 6 years plus a 25% margin based on a 2 year frequency – see footnote 2 on page 66.

Risk Informed IST Program Description

5.1.3 **LSSC** Testing will be performed in accordance with Code Case OMN-1, and NRC Generic Letter 89-10 and 96-05 commitments at an initial interval not to exceed 6 years until sufficient data exist to determine a more appropriate test frequency. MOV's with a passive function will be tested per the Code of Record, except, based on evaluation of design, service condition, and performance history, at a test frequency not to exceed 6 years (plus a 25% margin based on a 2 year frequency – see footnote 2 on page 66) and exercised at least once during a refueling cycle per OMN-1, Paragraph 3.6.1. Seat leakage testing, if required, will be per the Code of record, except at a test interval not to exceed 6 years (plus a 25% margin based on a 2 year frequency – see footnote 2 on page 66).

5.1.4 SCE will ensure procedurally that the potential benefits (such as identification of decreased thrust output and increased thrust requirements) and potential adverse affects (such as accelerated degradation due to aging or valve damage) are considered when determining the appropriate testing for each MOV.

5.1.5 The schema in the following table applies when determining MOV Test intervals.

Table 3 MOV Test Matrix

		MARGIN		
		Low: M < 5%	**Med: 5% ≤ M < 15%**	**High: M ≥15%**
Risk Rank	**HIGH**	QT/CS/RR BTO/BTC Biennial MC^{2*} Full MOVAT + PM ≤ 6 yr	QT/CS/RR BTO/BTC MC^{2*} ≤ 4yr Full MOVAT + PM ≤ 8 yr	QT/CS/RR BTO/BTC MC^{2*} ≤ 6yr Full MOVAT + PM ≤10 yr
	LOW	Biennial EXER MC^{2*} ≤ 4 years Full MOVAT + PM ≤ 8 yr	Biennial EXER MC^{2*} ≤ 4 years Full MOVAT + PM ≤10 yr	Biennial EXER MC^{2*} ≤ 6 ys Full MOVAT + PM ≤10 yr

* MC^2 is currently under development and not credited at this point. Transition to it will be phased in as test methodology validation completes for a given set of valves.

5.1.6 The result of the evaluation determines the testing interval with the most frequent testing interval applied to high risk, low margin valves with poor, or questionable performance history. Stepwise increases in interval out to the maximum allowable interval depend on the combination of risk rank, margin, and performance history.

Risk Informed IST Program Description

5.2 Relief Valves

5.2.1 Testing of relief valves will continue to be conducted in accordance with the Code of record (OM Appendix I) with no change in test interval. The Southern California Edison Company (SCE) believes that relief valve performance, as a whole, does not warrant interval extension. In the future, should performance history change, SCE will rank valves per the Integrated Decision-making Process (IDP) and extend intervals accordingly. The initial testing strategy will be:

.1 **HSSC:** Testing will be performed in accordance with the Code of Record as defined in 10CFR50.55a.

.2 **L-H:** Testing will be performed in accordance with the Code of Record as defined in 10CFR50.55a.

.3 **LSSC:** Testing will be performed in accordance with the Code of Record as defined in 10CFR50.55a.

5.3 Check Valves

5.3.1 **HSSC:** Testing will be performed in accordance with the ASME Code of Record as defined by 10CFR50.55a.

5.3.2 **L-H:** Testing will be performed in accordance with the ASME Code of Record as required by 10 CFR 50.55a except, based on evaluation of design, service condition, performance history, and compensatory actions, the test interval may be extended not to exceed 6 years (plus a 25% margin based on a 2 year frequency – see footnote 2 on page 66), except for the refueling water storage tank outlet check valves and the emergency sump outlet check valves which may be extended not to exceed 8 years (plus a 25% margin based on a 2 year frequency – see footnote 2 on page 66).

5.3.3 **LSSC:** Testing will be performed in accordance with the ASME Code of Record as defined by 10CFR50.55a except, based on evaluation of design, service condition, and performance history, the test interval may be extended not to exceed 6 years plus a 25% margin based on a 2 year frequency – see footnote 2 on page 66.

Risk Informed IST Program Description

5.3.4 HSSC, L-H, and LSSC check valves at SONGS are candidates for inclusion in the Check Valve Program (CVP), which has been developed to provide confidence that check valves will perform as designed. Station procedure(s) establish test/exam frequencies, methods, and acceptance criteria and provide performance-monitoring requirements for check valves in the CVP. Check valves in the CVP include check valves that are in the IST program, check valves identified as susceptible to unusually high wear, fatigue, or corrosion, and special valves used for personnel safety such as those in the breathing air system. The CVP includes approaches for identification of existing and incipient check valve failures using non-intrusive (e.g., radiography, acoustic emission (AE), magnetic flux (MF), and/or ultrasonic examination (UE) testing methods) and disassembly examination. Test data will be used (e.g., trended as appropriate) to provide confidence that check valves in the CVP will be capable of performing their intended function until the next scheduled test activity. Check valves may be added to or deleted from the CVP based on nonintrusive testing, disassembly examination results, component replacement, or site maintenance history. Kalsi Engineering performed a wear trending study for many check valves in the CVP. The results of this study will be factored in to the check valve test strategy using the Integrated Decision-making Process (IDP).

5.3.5 The "Check Valve Component Health Report" is updated quarterly with new design and operational information, and incorporates any applicable site or industry lessons learned.

5.4 Air Operated Valves (AOVs)

5.4.1 **HSSC:** Testing will be performed in accordance with the Code of Record as defined by 10CFR50.55a.

5.4.2 **L-H:** Testing will be performed in accordance with the Code of Record as required by 10CFR50.55a, except based on evaluation of design, service condition, performance history, and compensatory actions, the test interval may be extended not to exceed 6 years (plus a 25% margin based on a 2 year frequency – see footnote 2 on page 66). Additionally L-H AOVs will be stroked at least once during each operating cycle.

Risk Informed IST Program Description

5.4.3 **LSSC:** Testing will be performed in accordance with the Code of Record as defined by 10CFR50.55a, except based on evaluation of design, service condition, and performance history, the test interval may be extended not to exceed 6 years (plus a 25% margin based on a 2 year frequency – see footnote 2 on page 66). Additionally, LSSC AOVs will be stroked once during the operating cycle.

5.4.4 SCE has committed to work with the Joint Owners Group for Air Operated Valves (JOG AOV) to develop an enhanced AOV testing program similar to the MOV test program established in response to GL 89-10 and GL 96-05 (described above). The intent of this program is to specify AOV Program requirements to provide assurance that AOVs are capable of performing their intended safety-significant or risk-significant functions. Elements of the proposed program include establishing a scope of applicability, a categorization methodology, validation of safety significant functions by performing design basis reviews, performing baseline testing, and identifying the types of periodic testing necessary to identify potential degradation in a timely manner. SCE's current testing program meets or exceeds the current JOG AOV testing requirements for components within the IST program. To date, the design basis evaluations of all AOVs have not been performed. These evaluations will check the availability capability margin versus the required design-bases conditions to ensure adequate margin does indeed exist.

5.4.5 The current SCE AOV program is assessed on a biennial frequency, updated as appropriate with new design and operational information, and incorporates any applicable site or industry lessons learned.

5.5 Hydraulic Valves (E/H), Solenoid Valves, and Others (Manual Valves, etc.)

5.5.1 **HSSC:** Testing will be performed in accordance with the Code of Record as required by 10CFR50.55a.

5.5.2 **L-H:** Testing will be performed in accordance with the Code of Record as required by 10 CFR 50.55a except, based on evaluation of design, service condition, performance history, and compensatory actions, the test interval may be extended not to exceed 6 years (plus a 25% margin based on a 2 year frequency – see footnote 2 on page 66). Additionally, L-H HOVs and SOVs will be stroked once during the operating cycle.

Risk Informed IST Program Description

5.5.3 LSSC: Testing will be performed in accordance with the Code of Record as required by 10 CFR 50.55a except, based on evaluation of design, service condition, and performance history, the test interval may be extended not to exceed 6 years (plus a 25% margin based on a 2 year frequency – see footnote 2 on page 66). Additionally, LSSC HOVs and SOVs will be stroked once during the operating cycle.

5.6 Pumps

5.6.1 Pumps will be tested in accordance with the Code of Record (OM-ISTB) with the exception that the test frequency may be in accordance with the component risk categorization defined below:

.1 **HSSC:** Testing will be performed in accordance with the Code of Record as required by 10 CFR 50.55a. Additionally, Code testing will be augmented with periodic oil analysis and thermography. A motor current monitoring program is in the development stage. Once implemented, HSSC pumps will be included in the scope of that program.

.2 **L-H:** Testing will be performed in accordance with the Code of Record as required by 10 CFR 50.55a except based on evaluation of design, service condition, performance history, and compensatory actions, the test interval may be extended not exceed 6 years (plus a 25% margin based on a 2 year frequency – see footnote 2 on page 66).

.3 **LSSC:** Testing will be performed in accordance with the Code of Record as required by 10 CFR 50.55a except, based on evaluation of design, service condition, and performance history, the test interval may be extended not to exceed 6 years plus a 25% margin based on a 2 year frequency – see footnote 2 on page 66.

Risk Informed IST Program Description

5.6.1 (continued)

.4 All pumps will receive periodic thermography of their driver, lube oil analysis, alignment checks performed following major pump maintenance (using vibration analysis methods to confirm alignment), motor current testing (when the motor current testing program is implemented), vibration monitoring (required by the current Code), and flange loading checks of connected piping (note that this flange loading test is not periodic, but is performed after major maintenance/overhauls that required the disassembly of any flange in a safety-related system). Additional tests (e.g., thermography of the driver, or motor current testing[1]) are predictive in nature and involve trending of parameters that need to be compared more frequently in order to provide meaningful results. This augmented testing program for pumps provides reasonable assurance that adequate pump capacity margin exists such that pump operating characteristics over time do not degrade to a point of insufficient margin before the next scheduled test activity.

6.0 Cumulative Risk Impact

6.1 As part of the IDP review, the change in CDF and LERF will be calculated. The change in CDF and LERF will account for (but may not be limited to) changes in component availability, reliability, test intervals, and implemented test strategies (e.g., staggered testing, enhance testing).

6.2 The change in CDF and LERF will also be calculated for proposed changes to component test strategies and test intervals and their impact on component reliability, initiating event frequency and common-cause failure probabilities.

6.3 This review ensures that the incremental CDF and LERF change of 1) the implemented risk-informed program from the deterministic IST program and 2) the risk-informed program until the next IDP review (two fuel cycles) remain within the risk change guidelines of Regulatory Guides 1.174 and 1.175

7.0 Implementation

7.1 Implementation of the RI-IST to LSSC (including L-H) will consist of grouping components and then staggering the testing of the group over the test frequency.

[1] Both driver thermography and motor current testing are currently in the early stages of implementation at SCE.

Risk Informed IST Program Description

7.2 Grouping:

7.2.1 Components will generally be grouped based on:

.1 System

.2 Component type (MOV, AOV, Check Valve, etc.)

.3 Manufacturer

.4 Size

.5 Style (globe, gate, swing check, tilt disk, etc.)

.6 Application (pump discharge, flow path, orientation, etc).

7.2.2 The population of the group will be dependent on:

.1 Total population available, and

.2 Maintaining current testing schedule

7.2.3 Grouping components in this manner and testing on a staggered basis over the test interval reduces the importance of common cause failure modes since at least one valve in the group is tested during each cycle.

7.2.4 Testing of components within the defined group will be staggered over the test interval, typically 6 years. Testing will be scheduled on regular intervals over the test interval to ensure all components in the group are tested at least once during the interval, the same component is not tested repeatedly, while deferring others in the group, and not all components are tested at one time. The staggering allows the trending of components in the group to ensure the test frequency selected is appropriate. A test interval extension of 25% of the fundamental stagger interval (i.e. 1 refueling cycle or 2 years) accommodates operational circumstances that may interfere with establishing the plant conditions to meet the baseline test schedule.[2]

[2] Technical Specifications define the use of a stagger test interval as all components within the stagger test group must be tested within "n * the specified frequency". This equation results in an effective test interval for the stagger test group. In the case of the RI-IST a 6-year stagger interval results in a 2-year frequency for the individual components in the stagger group. In concert with the technical specification allowance for a 25% extension for surveillances, the RI-IST program would allow application of an extension up to 25% of 2 years. In the spirit of the Technical Specification allowance the extension would not be allowed as a routine occurrence, rather it would be applied infrequently to allow establishing the plant conditions required for the testing. SCE maintains an even 12-week rotating schedule for surveillance testing.

Risk Informed IST Program Description

7.2.5 Testing will be scheduled / planned such that there is no more than one cycle between tests of components in a group.

7.2.6 Grouping designators will be initially formulated as follows:

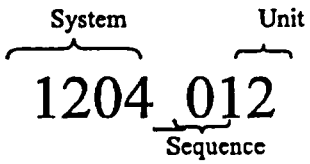

8.0 Performance Monitoring of RI-IST Components

8.1 In addition to the specific inservice testing proposed for each component group discussed in Section 5.0 above, the following additional monitoring for each component group is currently in place per existing site procedures.

8.2 The proposed monitoring plan is sufficient to detect component degradation in a timely manner. Further, the monitoring activities identified for each component group ensure that the following criteria are met:

8.2.1 Sufficient tests are conducted to provide meaningful data.

8.2.2 The inservice tests are conducted such that the probability of detecting incipient degradation is high.

8.2.3 Appropriate parameters are trended to provide reasonable assurance that the component will remain operable over the test interval.

8.2.4 The proposed performance-monitoring plan is sufficient to ensure that degradation is not significant for components placed on an extended test interval, and that failure rates assumed for these components will not be significantly compromised. The proposed performance monitoring, when coupled with SCE's corrective action program (discussed in Section 9.0), ensures corrective actions are taken and timely adjustments are made to individual component test strategies where appropriate.

Therefore, if a portion of extension is used to accommodate plant conditions in one interval, the next test is still completed at the baseline interval. The next surveillance due date is calculated from the previous due date, not the actual test date.

Risk Informed IST Program Description

8.2.5 Components that do not warrant test frequency extension based on limited, poor, or marginal performance histories will be monitored through the Corrective Action and Integrated Decisionmaking Processes and reviewed during the program periodic reassessment as described in Section 10.0.

8.2.6 The SCE RI-IST Program will be reassessed at a frequency not to exceed once every other refueling outage, based on Unit 3, to reflect changes in plant configuration, component performance test results, industry experience, and other inputs to the process.

8.2.7 Configuration changes will be assessed in concert with the current design change process. Therefore, the monitoring process for RI-IST is adequately coordinated with existing programs (e.g., Action Request program, Maintenance Rule monitoring, and design change process) for monitoring component performance and other operating experience on this site and, where appropriate, throughout the industry. Although the monitoring of reliability and unavailability goals for operating and standby systems/trains is required by the Maintenance Rule, it alone might not be sufficient to ensure operational readiness of components in the RI-IST program.

8.2.8 The SONGS Action Request program requires timely operability assessment for component performance issues detected outside the auspices of the IST program. This process, coupled with the evaluations performed in Maintenance Rule space in concert with IST trending, ensures continued operational readiness of RI-IST components.

8.2.9 The individual condition monitoring points for each component type are governed by site procedure and the 10CFR50.59 change process.

8.2.10 The results of component testing will be provided to and reviewed by the PRA group for potential impact to a PRA model update. The PRA model will be updated as necessary with changes tracked and documented per the PRA Change Process Program.

8.2.11 For an emergent plant modification, any new IST component added will initially be included at the current Code of Record test frequency. Only after evaluation of the component through the RI-IST Program (i.e., PRA model update if applicable and IDP review) will this be considered LSSC with an extended test interval.

Risk Informed IST Program Description

9.0 Corrective Action Plan

9.1 When an LSSC (including L-H) on the extended test interval fails to meet established test criteria, corrective actions will be taken in accordance with the SONGS corrective action program as described below for the RI-IST.

9.2 For all components not meeting the acceptance criteria, an Action Request (AR) will be generated. This document initiates the corrective action process. An AR may result from activities other than IST that identify degradation in performance.

9.3 The initiating event could be any other indications that the component is in a non-conforming condition. The unsatisfactory condition will be evaluated to:

a) Determine the impact on system operability since the previous test.

b) Review the previous test data for the component and all components in the group.

c) Perform an apparent cause analysis and/or a root cause analysis as applicable.

d) Determine if this is a generic failure. If it is a generic failure whose implications affect a group of components, initiate corrective action for all components in the affected group.

e) Initiate corrective action for failed IST components.

f) Evaluate the adequacy of the test interval. If a change is required, review the IST test schedule and change as appropriate.

g) The results of component testing will be provided to and reviewed by the PRA group for potential impact to a PRA model update. The PRA model will be updated as necessary with changes tracked and documented per the PRA Change Process Program.

9.4 For an emergent plant modification, any new IST component added will initially be included at the current Code of Record test frequency. Only after evaluation of the component through the RI-IST Program (i.e., PRA model update if applicable and IDP review) will this be considered LSSC with an extended test interval.

Risk Informed IST Program Description

10.0 Periodic Reassessment

10.1 As a living process, components will be reassessed at a frequency not to exceed every other refueling outage (based on Unit 3 refueling outages) to reflect changes in plant configuration, component performance test results, industry experience, and other inputs to the process. The RI-IST reassessment will be completed within 9 months of completion of the outage.

10.2 Part of this periodic reassessment will be a feedback loop of information to the PRA. This will include information such as components tested since the last reassessment, number and type of tests, number of failures, corrective actions taken including generic implication, and changed test frequencies. Once the PRA has been reassessed, the information will be brought back to the IDP for deliberation and confirmation of the existing lists of HSSCs and LCCSs or modification of these lists based on the new data, if required. As part of the IDP, confirmatory measures previously used to categorize components as LSSC, as well as compensatory measures used to justify the extension of L-H components, will be validated.

10.3 During the periodic reassessment L-H and LSSC components whose performance history did not justify extension will be reviewed. The review will focus on the adequacy and effectiveness of corrective actions, as well as the performance of similar components in similar applications. If the Expert Panel judges the performance warrants a test interval extension based on the combination of risk metrics, available margin, and successive satisfactory performance, then and only then with Panel consensus may the test interval be adjusted.

10.4 Additionally, the maximum test interval for each component or component group will be verified or modified as dictated by the IDP.

11.0 Changes to RI-IST

11.1 Changes to the process described above (such as acceptance guidelines used for the IDP) as well as changes in test methodology issues that involve deviation from NRC endorsed Code requirements, NRC endorsed Code Case, or published NRC guidance are subject to NRC review and approval prior to implementation.

11.2 Other changes using the process detailed above (such as relative ranking, risk categorization, and grouping) are subject to site procedures and the associated change process pursuant to 10CFR50.59. SONGS will periodically submit changes to the NRC for their information.

Inservice Testing Program Valve List

SPECIFIC NOTES USED IN THE VALVE IST TABLE

1. NOT USED.

2. Although these are non-ASME Section III Valves, they are tested in accordance with OM Appendix I requirements for Class 2 and 3 Pressure Relief Devices.

3. The maximum stroke times associated with these valves are protected values and may only be changed under certain circumstances. See Attachment 4 for a summary of the safety analysis and technical specification stroke time limits for valves in this program. If a valve stroke time exceeds the safety analysis or technical specification limit, it shall be considered inoperable and the Technical Specification ACTIONS implemented immediately. On the other hand, if a valve exceeds a required action stroke time limit even if it is less than the Technical Specification limit, an AR shall be generated and the valve evaluated for return to operability in accordance with the AR program, see SO123-XX-1, ISS2. For valves that do not appear in Attachment 4, the limit shown in Inservice Testing Database is the only limit and if a valve exceeds this limit, it shall be considered inoperable.

4. The maximum allowable stroke times for valves 2(3)HV4705, 2(3)HV4706, 2(3)HV4715, 2(3)HV4716 and 2(3)HV4730 are protected values and may not be relaxed without revision to IST program document, 90055(ref: 2.1.1). DCNs 41 thru 51 incorporated stroke time limits based on degraded DC bus voltage (AR#960500722).

5. These valves are isolated during routine at-power operation. Quarterly IST requirements may be waived while the system is "out-of-service"; however, the ISTs shall be completed satisfactorily within three months prior to placing the system in operable status. See step 6.6.2.8 and OMa-ISTC-3570 (AR#991000782).

6. "Autovent" valves S2(3)1413MW458, 459, 460 and 461 are tested by verifying no continuous water flow issues from the 6" open ended SWCS Pump Vent Pipe, when the associated pump is in operation.

7. NOT USED.

8. Reactor Coolant Pumps need not be stopped for cold shutdown valve testing. That is, affected valves may be tested during plant outages when reactor coolant pumps are stopped for a sufficient period of time and on a refueling outage schedule, but not more often than once every 92 days. See NUREG 1482, Paragraph 3.1.1.4.

9. NOT USED.

10. NOT USED.

11. NOT USED.

Inservice Testing Program Valve List

SPECIFIC NOTES USED IN THE VALVE IST TABLE

12. NOT USED.

13. The seat leakage testing for these valves is controlled and conducted in accordance with Technical Specification Surveillance SR 3.4.14.1.

14. NOT USED.

15. Test the Safety Injection System Valves 2(3)PSV9349, Shutdown Cooling System Relief, Valve From RCS Loop No. 2, at a 30-month interval. Although OM-1 allows a 48-month interval, FSAR paragraph 5.2.2.11.1.3 requires testing at a 30-month interval. Per AR 961000765, the interval remains at 30 months pending resolution.

16. These valves require non-intrusive examination at reactor refueling intervals to satisfy the closed exercise test. Maintenance Engineering is responsible for the completion of the Unit 2 and 3 tests.

17. NOT USED.

18. This check valve is required to undergo a partial stroke test (as a minimum) using flow following disassembly, inspection and reassembly. See NRC GL 89-04.

19. The manual stroke test specified for these valves is only required to be a partial stroke to the extent necessary to demonstrate the operation of the valve manually, including the ability to engage the clutch.

20. These valves are non-Code valves that have a safety function and therefore require periodic surveillance. They are listed here in the IST Program for convenience; however, a missed or failed surveillance will not constitute a violation of Technical Specification 5.5.2.10 or LCS 5.0.103.2.6. See GL 89-04, Response to Question #53, and NUREG 1482 (ref:2.5.3) Section 2.2.

21. Stroke time is not required for Chilled Water system valves 2/3TV9720, Control Room Complex Emerg A/C E-419 Coil Temp Cont Valve and 2/3TV9749, Control Room Complex Emerg A/C E-418 Coil Temp Cont Valve. These components are skid-mounted sub-components of the chiller and, as such, operability of these valves is confirmed in conjunction with the Technical Specification testing of the chiller. See 90055 (ref:2.1.1), NUREG 1482 (ref:2.5.3) Section 3.4, and Technical Specifications Surveillance SR 3.7.11.1.

22. This requires close verification only per Reference 2.1.1. Stroke testing (or exercise testing) is not required.

23. These valves are included in the IST Program at the recommendation of the Risk-Informed IST Expert Panel. Testing frequency will be set by the IST Coordinator based on practicality of testing, significance of the incremental reduction in risk (CDF) and the recommendation of Risk-Informed IST Expert Panel.

Inservice Testing Program Valve List

SPECIFIC NOTES USED IN THE VALVE IST TABLE

24. Tests shall be performed on all Class 2 and 3 relief devices used in thermal relief application every 10 years, unless performance data indicate more frequent testing is necessary. In the event of test failures, scope expansion is not required [Reference 2.1.2, OM Appendix I, I-1390]

25. These valves are non-Code valves that have a safety function and therefore require periodic surveillance. They are listed here in the IST Program for convenience. Testing frequency is established based on associated Diesel Generator overhaul schedules or Lube Oil Pump outage schedules.

Inservice Testing Program Valve List

NOTE: The specific test frequencies identified in the listing below are subject to change based on the implementation of the Risk Informed Inservice Testing Relief Request. They remain here as a point of reference to the current code requirements until the Risk Informed program is fully implemented. Actual test frequencies under the Risk Informed Program are determined as a part of the Integrated Decisionmaking Process outlined in Attachment 1. The IST Coordinator maintains a complete and current listing of the Risk Informed test frequencies and grouping.

AIR CONDITIONING SYSTEM

2(3)HCV9918, Hydrogen Purge Exhaust Control Valve
(Code/Category 2/A) (6" Butterfly/Manual) Dwg 40172B
AJ/SP
PIT/2A

2(3)HCV9945, Hydrogen Purge Unit A-080 Discharge Valve
(Code/Category 2/A) (6" Butterfly/Manual) Dwg 40172B
AJ/SP
PIT/2A

2(3)HV9917, Containment Hydrogen Purge Outlet Valve
(Code/Category 2/A) (6" Butterfly/Motor) Dwg 40172B
AJ/SP
PIT/2A

2(3)HV9946, Containment Hydrogen Purge Inlet
(Code/Category 2/A) (6" Butterfly/Motor) Dwg 40172B
AJ/SP
PIT/2A

S2(3)1500MU038 (3/4-038-C-396), ILRT Pressurization Connection
(Code/Category 2/A) (3/4" Globe/Manual) Dwg 40171B
AJ/SP

S2(3)1500MU039 (3/4-039-C-396), ILRT Pressurization Connection
(Code/Category 2/A) (3/4" Globe/Manual) Dwg 40171B
AJ/SP

Inservice Testing Program Valve List

AUXILIARY FEEDWATER

2(3)HV4705, AFW Control Valve - Steam Generator E088
(Code/Category 3/B) (4" Globe/Motor) Dwg 40160A
BMPO/CS (Note: 19)
BTC/QT (Notes: 3,4)
BTO/QT (Notes: 3,4)
PIT/2A

2(3)HV4706, AFW Control Valve - Steam Generator E089
(Code/Category 3/B) (4" Globe/Motor) Dwg 40160A
BMPO/CS (Note: 19)
BTC/QT (Notes: 3,4)
BTO/QT (Notes: 3,4)
PIT/2A

2(3)HV4712, AFW Pump 2P504 Discharge to Steam Generators
(Code/Category 3/B) (4" Globe/Motor) Dwg 40160A
BMPO/CS (Note: 19)
BTC/QT (Note: 3)
BTO/QT (Note: 3)
PIT/2A

2(3)HV4713, AFW Pump 2P141 Discharge to Steam Generators
(Code/Category 3/B) (4" Globe/Motor) Dwg 40160A
BTC/QT (Note: 3)
BTO/QT (Note: 3)
PIT/2A

2(3)HV4714, AFW Isolation Valve to Steam Generator E088
(Code/Category 2/B) (6" Globe/Electro Hydraulic) Dwg 40160A
BMPO/CS (Note: 19)
BTC/QT (Note: 3)
BTO/QT (Note: 3)
FSTC/QT
PIT/2A

2(3)HV4715, AFW Isolation Valve to Steam Generator E089
(Code/Category 2/B) (6" Globe/Motor) Dwg 40160A
BMPO/CS (Note: 19)
BTC/QT (Notes: 3,4)
BTO/QT (Notes: 3,4)
PIT/2A

Inservice Testing Program Valve List

AUXILIARY FEEDWATER (Continued)

2(3)HV4716, AFW Pump Turbine Trip and Throttle Valve
(Code/Category NA/B) (4" Globe/Motor) Dwg 40160B
BMPO/CS (Note: 19, 20)
BTC/QT (Notes: 3,4)
BTO/QT (Notes: 3,4)
PIT/2A

2(3)HV4730, AFW Isolation Valve to Steam Generator E088
(Code/Category 2/B) (6" Globe/Motor) Dwg 40160A
BMPO/CS (Note: 19)
BTC/QT (Notes: 3,4)
BTO/QT (Notes: 3,4)
PIT/2A

2(3)HV4731, AFW Isolation Valve to Steam Generator E089
(Code/Category 2/B) (6" Globe/Electro Hydraulic) Dwg 40160A
BTC/QT (Note: 3)
BTO/QT (Note: 3)
FSTC/QT
PIT/2A

2(3)HV4762, Bypass Valve for AFW Valve HV4712
(Code/Category 3/B) (4" Globe/Air) Dwg 40160A
BTC/QT (Note: 3)
PIT/2A
FSTC/QT

2(3)HV4763, Bypass Valve for AFW Valve HV4713
(Code/Category 3/B) (4" Globe/Air) Dwg 40160A
BTC/QT (Note: 3)
PIT/2A
FSTC/QT

S2(3)1305MU088 (8-088-D-212), Drain Vlv Frm Cond Storage T121 to T120 Sump
(Code/Category 3/B) (8" Gate/Manual) Dwg 40150D
BMO/2A

S2(3)1305MU121 (6-121-D-598), AFW Pump P140 Supply to Steam Generator E089
(Code/Category 3/C) (6" Check/Self Actuated) Dwg 40160A
CVTC/CS
CVTO/CS

S2(3)1305MU124 (4-124-C-599), AFW Check Valve at Steam Generator E089
(Code/Category 2/C) (4" Check/Self Actuated) Dwg 40141A
CVTC/CS
CVTO/CS

Inservice Testing Program Valve List

AUXILIARY FEEDWATER (Continued)

S2(3)1305MU126 (6-126-D-598), AFW Pump P141 Discharge Check Valve
(Code/Category 3/C) (6" Check/Self Actuated) Dwg 40160A
CVTC/CS
CVTO/CS

S2(3)1305MU448 (4-448-C-599), AFW Check Valve at Steam Generator E088
(Code/Category 2/C) (4" Check/Self Actuated) Dwg 40141A
CVTC/CS
CVTO/CS

S2(3)1305MU468 (8-468-D-212), AFW P140 Suction Isolation Valve
(Code/Category 3/B) (8" Gate/Manual) Dwg 40160A
BMC/2A

S2(3)1305MU469 (8-469-D-212), AFW P141 Suction Isolation Valve
(Code/Category 3/B) (8" Gate/Manual) Dwg 40160A
BMC/2A

S2(3)1305MU496 (1/2-496-D-617), Ammonia Disch Chk to AFW P140 Suction
(Code/Category 3/AC) (1/2" Check/Self Actuated) Dwg 40160A
AT/2A
CVTC/QT
BDTO/QT

S2(3)1305MU497 (1/2-497-D-617), Hydrazine Pump P037 Disch Check to AFW P140
(Code/Category 3/AC) (1/2" Check/Self Actuated) Dwg 40160A
AT/2A
CVTC/QT
BDTO/QT

S2(3)1305MU498 (1/2-498-D-617), Ammonia Disch Check to AFW P141 Suction
(Code/Category 3/AC) (1/2" Check/Self Actuated) Dwg 40160A
AT/2A
CVTC/QT
BDTO/QT

S2(3)1305MU499 (1/2-499-D-617), Hydrazine Pump P037 Disch Check to AFW P141
(Code/Category 3/AC) (1/2" Check/Self Actuated) Dwg 40160A
AT/2A
CVTC/QT
BDTO/QT

S2(3)1305MU532 (6-532-D-598), AFW Pump P504 Discharge Check Valve
(Code/Category 3/C) (6" Check/Self Actuated) Dwg 40160A
CVTC/CS
CVTO/CS

Inservice Testing Program Valve List

AUXILIARY FEEDWATER (Continued)

S2(3)1305MU538 (8-538-D-212), AFW Pump P504 Suction Isolation Valve (Code/Category 3/B) (8" Gate/Manual) Dwg 40160A
BMC/2A

S2(3)1305MU539 (1/2-539-D-617), Ammonia Disch Chk to AFW P504 Suction (Code/Category 3/AC) (1/2" Check/Self Actuated) Dwg 40160A
AT/2A
CVTC/QT
BDTO/QT

S2(3)1305MU541 (1/2-541-D-617), Hydrazine Pump P037 Disch Chk to AFW P504 (Code/Category 3/AC) (1/2" Check/Self Actuated) Dwg 40160A
AT/2A
CVTC/QT
BDTO/QT

S2(3)1305MU547 (6-547-D-598), AFW Pump P140 Discharge Check Valve (Code/Category 3/C) (6" Check/Self Actuated) Dwg 40160A
CVTC/CS
CVTO/CS

S2(3)1305MU1122 (1-1122-D-549), Sec BA Inj., AFW Check Valve (Code/Category 3/AC) (1" Check/Self Actuated) Dwg 40160A
AT/2A
CVTC/QT (Note: 5)
BDTO/QT

S2(3)1305MU1123 (1-1123-D-549), Secondary BA Injection Sys AFW Check Valve (Code/Category 3/AC) (1" Check/Self Actuated) Dwg 40160A
AT/2A
CVTC/QT (Note: 5)
BDTO/QT

S2(3)1305MU1125 (1-1125-D-549), Secondary BA Inj System AFW Check Valve (Code/Category 3/AC) (1" Check/Self Actuated) Dwg 40160A
AT/2A
CVTC/QT (Note: 5)
BDTO/QT

S2(3)1305MU1126 (1-1126-D-549), Secondary BA Injection Sys AFW Check Valve (Code/Category 3/AC) (1" Check/Self Actuated) Dwg 40160A
AT/2A
CVTC/QT (Note: 5)
BDTO/QT

Inservice Testing Program Valve List

AUXILIARY FEEDWATER (Continued)

2(3)PSV6193C, Secondary BA Injection System to SG E089 AFW Relief Valve
(Code/Category 3/C) (½X1" Safety/Self Actuated) Dwg 40160A
RVT/10S

2(3)PSV6193D, Secondary BA Injection System to SG E089 AFW Relief Valve
(Code/Category 3/C) (½X1" Safety/Self Actuated) Dwg 40160A
RVT/10S

BORIC ACID MAKEUP

2(3)FV9253, Makeup Water to Volume Control Tank
(Code/Category 3/B) (3" Globe/Air) Dwg 40125B
BTC/QT
FSTC/QT
PIT/2A

2(3)HV9231, Boric Acid Makeup Pump P175 Recirculation to Tank T072
(Code/Category 3/B) (2" Globe/Air) Dwg 40125A
BTC/QT
FSTC/QT
PIT/2A

2(3)HV9235, BAMU Tank T072 to Gravity Feed to Charging Pump Suction
(Code/Category 3/B) (3" Gate/Motor) Dwg 40125A
BTO/CS
PIT/2A

2(3)HV9236, Boric Acid Makeup Pump P174 Recirculation to Tank T071
(Code/Category 3/B) (2" Globe/Air) Dwg 40125A
BTC/QT
FSTC/QT
PIT/2A

2(3)HV9240, BAMU Tank T071 to Charging Pump Suction Header Control Valve
(Code/Category 3/B) (3" Gate/Motor) Dwg 40125A
BTO/CS
PIT/2A

2(3)HV9247, BAMU Pump to Charging Pump Suction Control Valve
(Code/Category 3/B) (3" Gate/Motor) Dwg 40125B
BMPO/CS (Note: 19)
BTO/CS
PIT/2A

Inservice Testing Program Valve List

BORIC ACID MAKEUP (Continued)

S2(3)1218MU033 (3-033-D-675), BAMU Pump P175 Discharge Check Valve
(Code/Category 3/C) (3" Check/Self Actuated) Dwg 40125B
CVTC/CS
CVTO/CS

S2(3)1218MU035 (3-035-D-676), BAMU Pump P174 Discharge Check Valve
(Code/Category 3/C) (3" Check/Self Actuated) Dwg 40125B
CVTC/CS
CVTO/CS

S2(3)1218MU046 (3-046-Y-675), Demineralized Water to Boric Acid Mixing Tee
(Code/Category 2/C) (3" Check/Self Actuated) Dwg 40125B
CVTC/QT
BDTO/QT

CHEMICAL AND VOLUME CONTROL

2(3)HV9200, Charging Pumps to Regenerative Heat Exchanger E063
(Code/Category 2/A) (2" Globe/Air) Dwg 40123A
AJ/SP
BTC/CS
BTO/CS
FSTO/CS
PIT/2A

2(3)HV9205, Regenerative Heat Exchanger to Letdown Heat Exchanger
(Code/Category 2/A) (2" Globe/Air) Dwg 40123A
AJ/SP
BTC/CS (Note: 3)
FSTC/CS
PIT/2A

2(3)LV0227B, VCT Outlet Valve
(Code/Category 2/A) (4" Gate/Motor) Dwg 40124A
AT/2A
BTC/CS
PIT/2A

2(3)PSV9221, VCT Outlet To Misc Waste Tank Pressure Safety/Relief
(Code/Category 2/C) (0.5x0.5" Safety/Self Actuated) Dwg 40124A
RVT/10A (Note: 24)

2(3)PSV9222, Charging Pump P190 Suction Pressure Safety/Relief Valve
(Code/Category 2/C) (0.5x0.5" Safety/Self Actuated) Dwg 40124B
RVT/10A (Note: 24)

Inservice Testing Program Valve List

CHEMICAL AND VOLUME CONTROL (Continued)

2(3)PSV9223, Charging Pump P191 Suction Pressure Safety/Relief Valve
(Code/Category 2/C) (0.5x0.5" Safety/Self Actuated) Dwg 40124B
RVT/10A (Note: 24)

2(3)PSV9224, Charging Pump P192 Suction Pressure Safety/Relief Valve
(Code/Category 2/C) (0.5x0.5" Safety/Self Actuated) Dwg 40124B
RVT/10A (Note: 24)

2(3)PSV9225, Charging Pump P190 Discharge Pressure Safety/Relief Valve
(Code/Category 2/C) (1.5x2" Safety/Self Actuated) Dwg 40124B
RVT/10S (Note: 24)

2(3)PSV9226, Charging Pump P191 Discharge Pressure Safety/Relief Valve
(Code/Category 2/C) (1.5x2" Safety/Self Actuated) Dwg 40124B
RVT/10S (Note: 24)

2(3)PSV9227, Charging Pump P192 Discharge Pressure Safety/Relief Valve
(Code/Category 2/C) (1.5x2" Safety/Self Actuated) Dwg 40124B
RVT/10S (Note: 24)

2(3)TV9267, Letdown Containment Isolation Valve
(Code/Category 2/A) (2" Gate/Motor) Dwg 40123A
AJ/SP
BTC/CS (Note: 3)
PIT/2A

S2(3)1201MU031 (3-031-C-170), Purif. Valve - Letdown Return to Shutdown Cooling
(Code/Category 2/A) (3" Gate/Manual) Dwg 40112B
AT/2A

S2(3)1208MU005 (2-005-C-036), CVCS to No. 2 HPSI Header Isolation Valve
(Code/Category 2/B) (2" Gate/Manual) Dwg 40112C
BMO/2A

S2(3)1208MU015 (4-015-C-675), VCT to Charging Pump Suction Check Valve
(Code/Category 2/AC) (4" Check/Self Actuated) Dwg 40124A
AT/2A
CVTC/CS
BDTO/CS

S2(3)1208MU017 (2-017-C-554), Charging Pump P192 Discharge Check Valve
(Code/Category 2/C) (2" Check/Self Actuated) Dwg 40124B
CVTO/QT
BDTC/QT

Inservice Testing Program Valve List

CHEMICAL AND VOLUME CONTROL (Continued)

S2(3)1208MU045 (1/2-045-C-611), Chemical Addition Tank T001 to Charging Suction Header
(Code/Category 2/C) (1/2" Check/Self Actuated) Dwg 40124B
CVTC/CS (Note: 22)
BDTO/CS

S2(3)1208MU065 (2-065-C-036), Charging Pump Combination Discharge Valve to HPSI Header
(Code/Category 2/B) (2" Gate/Manual) Dwg 40124B
BMO/2A

S2(3)1208MU066 (2-066-C-554), Charging Pump Combined Discharge Valve to HPSI Header
(Code/Category 2/C) (2" Check/Self Actuated) Dwg 40124B
CVTO/CS
BDTC/CS

S2(3)1208MU067 (2-067-C-554), Charging Pump P190 Discharge Check Valve
(Code/Category 2/C) (2" Check/Self Actuated) Dwg 40124B
CVTO/QT
BDTC/QT

S2(3)1208MU069 (2-069-C-554), Charging Pump P191 Discharge Check Valve
(Code/Category 2/C) (2" Check/Self Actuated) Dwg 40124B
CVTO/QT
BDTC/QT

S2(3)1208MU082 (3-082-C-675), Gravity Feed - BAMU Tanks to Charging Pump P190 Suction
(Code/Category 2/C) (3" Check/Self Actuated) Dwg 40124B
CVTC/CS
CVTO/CS

S2(3)1208MU083 (3-083-C-675), BAMU Pumps to Charging Pumps Suction Header
(Code/Category 2/C) (3" Check/Self Actuated) Dwg 40124B
CVTO/CS
BDTC/CS

S2(3)1208MU084 (2-084-C-334), Charging Pump Discharge to Regen Heat Exchanger
(Code/Category 2/B) (2" Globe/Manual) Dwg 40123A
BMC/2A

S21208MU094 (1 1/2-094-C-611), Coolant Polishing Demineralizer to Charging Pump Suction Header
(Code/Category 2/C) (1-1/2" Check/Self Actuated) Dwg 40124A
CVTC/CS - Unit 2 (Note: 22)
BDTO/CS

Inservice Testing Program Valve List

CHEMICAL AND VOLUME CONTROL (Continued)

S31208MU094 (1 1/2-094-C-611), Coolant Polishing Demineralizer to Charging Pump Suction Header
(Code/Category 2/C) (1-1/2" Check/Self Actuated) Dwg 40124A
CVTC/RR - Unit 3 (Notes: 16, 22)
BDTO/RR

S2(3)1208MU122 (2-122-C-554), Charging Pumps Check Valve to Regen Heat Exchanger E063
(Code/Category 2/AC) (2" Check/Self Actuated) Dwg 40123A
AJ/SP
CVTC/RR
CVTO/RR

S2(3)1208MU130 (2-130-C-334), Contmt Isol - Chg Pump Disch to Aux Spray Regen HX Bypass
(Code/Category 2/A) (2" Gate/Manual) Dwg 40123A
AJ/SP
BMC/2A
BMO/2A
PIT/2A

CHILLED WATER

2(3)HV9900, Containment Cooling Supply Isolation Valve Penetration 45
(Code/Category 2/A) (8" Butterfly/Motor) Dwg 40170A
AJ/SP
BTC/QT (Note: 3)
PIT/2A

2(3)HV9920, Containment Isolation Valve - Cooling Supply
(Code/Category 2/A) (8" Butterfly/Air) Dwg 40170A
AJ/SP
BTC/QT (Note: 3)
FSTC/QT
PIT/2A

2(3)HV9921, Containment Isolation Valve - Cooling Return
(Code/Category 2/A) (8" Butterfly/Air) Dwg 40170A
AJ/SP
BTC/QT (Note: 3)
FSTC/QT
PIT/2A

Inservice Testing Program Valve List

CHILLED WATER (Continued)

2(3)HV9971, Containment Isolation Valve - Cooling Return, Pen 46
(Code/Category 2/A) (8" Butterfly/Motor) Dwg 40170A
AJ/SP
BTC/QT (Note: 3)
PIT/2A

2(3)PSV9933, Chill Water From Containment Cooling Chiller E202
(Code/Category NA/C) (1X1" Safety/Self Actuated) Dwg. 40170
RVT/10A (Notes: 2, 24)

2(3)PSV9936, Chill Water From Containment Cooling Chiller E201
(Code/Category NA/C) (1X1" Safety/Self Actuated) Dwg. 40170D
RVT/10A (Notes: 2,24)

2/3PSV9881A, (ME336) Emerg Chilled Wtr Loop A-Chiller OT
(Code/Category 3/C) (1" Safety/Self Actuated) Dwg 40179A
RVT/10A (Note: 24)

2/3PSV9881B, (ME335) Emerg Chilled Wtr Loop B-Chiller OT
(Code/Category 3/C) (1" Safety/Self Actuated) Dwg 40180A
RVT/10A (Note: 24)

2/3PSV9887A, (ME336) Emergency Chilled Water Loop "A" Makeup Water Relief
(Code/Category 3/C) (1-1/2" Safety/Self Actuated) Dwg 40179A
RVT/10S

2/3PSV9887B, (ME335) Emergency Chilled Water Loop "B" Makeup Water Relief
(Code/Category 3/C) (1-1/2" Safety/Self Actuated) Dwg 40180A
RVT/10S

2/3TV9720, Control Room Complex Emerg A/C E-419 Coil Temp Cont Valve
(Code/Category 3/B) (2-1/2" 3-Way/Electro Hydraulic) Dwg 40180B
BTC/QT (Note: 21)
BTO/QT

2/3TV9749, Control Room Complex Emerg A/C E-418 Coil Temp Cont Valve
(Code/Category 3/B) (2-1/2" 3-Way/Electro Hydraulic) Dwg 40179B
BTC/QT (Note: 21)
BTO/QT

SA1417MU136 (1-136-D-639), (ME 335) Check Valve Prevents NSW Leakage & BackFlow
(Code/Category 3/AC) (1" Check/Self Actuated) Dwg 40180A
AT/2A
CVTC/QT
BDTO/QT

Inservice Testing Program Valve List

CHILLED WATER (Continued)

SA1417MU138 (1-138-D-639), (ME 336) Check Valve to Prevent Leakage and BackFlow on NSW
(Code/Category 3/AC) (1" Check/Self Actuated) Dwg 40179A
AT/2A
CVTC/QT
BDTO/QT

SA1513MU830 (1 1/8-830-D-*), Aux Bldg Emerg Chiller E336 Oil Cooler Outlet Check Valve
(Code/Category NA/C) (1-1/8" Check/Self Actuated) Dwg 40179E
CVTO/QT (Note: 20)
BDTC/QT

SA1513MU835 (1 1/8-835-D-*), Aux Bldg Emerg Chiller E335 Oil Cooler Outlet Check Valve
(Code/Category NA/C) (1-1/8" Check/Self Actuated) Dwg 40180D
CVTO/QT (Note: 20)
BDTC/QT

COMPONENT COOLING WATER

2(3)HV6211, Containment Isolation Valve - CCW Non-Critical Loop
(Code/Category 2/A) (10" Butterfly/Motor) Dwg 40127F
AJ/SP
BTC/CS (Note: 3)
PIT/2A

2(3)HV6212, CCW from Heat Exchanger E001A to Non-Critical Loop
(Code/Category 3/B) (28" Butterfly/Air) Dwg 40127D
BTC/CS (Note: 3)
FSTC/CS
PIT/2A

2(3)HV6213, Component Cooling Discharge to Non-Critical Loop
(Code/Category 3/B) (28" Butterfly/Air) Dwg 40127D
BTC/CS (Note: 3)
FSTC/CS
PIT/2A

2(3)HV6216, Containment Isolation - CCW Non-Critical Loop Return
(Code/Category 2/A) (10" Butterfly/Motor) Dwg 40127F
AJ/SP
BTC/CS (Note: 3)
PIT/2A

Inservice Testing Program Valve List

COMPONENT COOLING WATER (Continued)

2(3)HV6218, Component Cooling Water Pump Suction From Non-Critical Loop (Code/Category 3/B) (28" Butterfly/Air) Dwg 40127A
BTC/CS (Note: 3)
FSTC/CS
PIT/2A

2(3)HV6219, Component Cooling Water Pump Suction From Non-Critical Loop (Code/Category 3/B) (28" Butterfly/Air) Dwg 40127A
BTC/CS (Note: 3)
FSTC/CS
PIT/2A

2(3)HV6223, Containment Isolation - CCW Non-Critical Loop Supply (Code/Category 2/A) (10" Butterfly/Motor) Dwg 40127F
AJ/SP
BTC/CS (Note: 3)
PIT/2A

2(3)HV6227, CCW Critical Loop A Supply to CCW Pump P025 Motor (Code/Category 3/B) (3 Gate/Motor) Dwg 40127A
PIT/2A

2(3)HV6229, CCW Critical Loop B Supply to CCW Pump P025 Motor (Code/Category 3/B) (3 Gate/Motor) Dwg 40127A
PIT/2A

2(3)HV6236, Containment Isolation - CCW Non-Critical Loop Return (Code/Category 2/A) (10" Butterfly/Motor) Dwg 40127F
AJ/SP
BTC/CS (Note: 3)
PIT/2A

2(3)HV6366, Component Cooling Water to Emergency Cooling Unit E-401 (Code/Category 2/A) (8" Gate/Motor) Dwg 40172B
AJ/SP
BTC/QT
BTO/QT (Note: 3)
PIT/2A

2(3)HV6367, Component Cooling Water to Emergency Cooling Unit E-401 (Code/Category 2/A) (8" Gate/Motor) Dwg 40172B
AJ/SP
BTC/QT
BTO/QT (Note: 3)
PIT/2A

Inservice Testing Program Valve List

COMPONENT COOLING WATER (Continued)

2(3)HV6368, Component Cooling Water to Emergency Cooling Unit E-400
(Code/Category 2/A) (8" Gate/Motor) Dwg 40172B
AJ/SP
BTC/QT
BTO/QT (Note: 3)
PIT/2A

2(3)HV6369, Component Cooling Water to Emergency Cooling Unit E-400
(Code/Category 2/A) (8" Gate/Motor) Dwg 40172B
AJ/SP
BTC/QT
BTO/QT (Note: 3)
PIT/2A

2(3)HV6370, Component Cooling Water to Emergency Cooling Unit E-399
(Code/Category 2/A) (8" Gate/Motor) Dwg 40172B
AJ/SP
BTC/QT
BTO/QT (Note: 3)
PIT/2A

2(3)HV6371, Component Cooling Water Ret. from Emerg Cooling Unit E-399
(Code/Category 2/A) (8" Gate/Motor) Dwg 40172B
AJ/SP
BTC/QT
BTO/QT (Note: 3)
PIT/2A

2(3)HV6372, Component Cooling Water to Emergency Cooling Unit E-402
(Code/Category 2/A) (8" Gate/Motor) Dwg 40172B
AJ/SP
BTC/QT
BTO/QT (Note: 3)
PIT/2A

2(3)HV6373, Component Cooling Water to Emergency Cooling Unit E-402
(Code/Category 2/A) (8" Gate/Motor) Dwg 40172B
AJ/SP
BTC/QT
BTO/QT (Note: 3)
PIT/2A

Inservice Testing Program Valve List

COMPONENT COOLING WATER (Continued)

2(3)HV6500, Component Cooling Water from SDCS Heat Exchanger E003
(Code/Category 3/B) (18" Butterfly/Air) Dwg 40127E
BTO/QT (Note: 3)
FSTO/QT
PIT/2A

2(3)HV6501, Component Cooling Water from SDCS Heat Exchanger E004
(Code/Category 3/B) (18" Butterfly/Air) Dwg 40127E
BTO/QT(Note: 3)
FSTO/QT
PIT/2A

2(3)HV6569, PPMU to CCW Loop "B" Makeup Discharge Valve
(Code/Category 2/B) (1" Ball/Air) Dwg 40127J
BTC/QT
BTO/QT (Note: 3)
FSTO/QT
PIT/2A

2(3)HV6570, PPMU to CCW Loop "A" Makeup Discharge Valve
(Code/Category 2/B) (1" Ball/Air) Dwg 40127J
BTC/QT
BTO/QT (Note: 3)
FSTO/QT
PIT/2A

2(3)PCV6358, CCW Surge Tank T003A Nitrogen Back-Pressure Regulator
(Code/Category 3/AC) (1") Dwg 40127B
CVTC/RR
BDTO/RR

2(3)PCV6361, CCW Surge Tank T004B Nitrogen Back-Pressure Regulator
(Code/Category 3/AC) (1") Dwg 40127B
CVTC/RR
BDTO/RR

2(3)PSV6240, CCW Heat Exchanger E001 Shell Side Safety/Relief Valve
(Code/Category 3/C) (2x2" Safety/Self Actuated) Dwg 40127C
RVT/10A (Note: 24)

2(3)PSV6245, CCW Heat Exchanger E002 Shell Side Safety/Relief Valve
(Code/Category 3/C) (2x2" Safety/Self Actuated) Dwg 40127C
RVT/10A (Note: 24)

Inservice Testing Program Valve List

COMPONENT COOLING WATER (Continued)

2(3)PSV6249, CCW From Shutdown Heat Exchanger E004 Pressure Safety/Relief Valve
(Code/Category 3/C) (1x1" Safety/Self Actuated) Dwg 40127E
RVT/10A (Note: 24)

2(3)PSV6252, CCW From CNTMT Spray Pump P012 Pressure Safety/Relief
(Code/Category 3/C) (2x2" Safety/Self Actuated) Dwg 40127E
RVT/10A (Note: 24)

2(3)PSV6255, CCW From LPSI Pump P015 Pressure Safety/Relief Valve
(Code/Category 3/C) (1x1" Safety/Self Actuated) Dwg 40127E
RVT/10A (Note: 24)

2(3)PSV6258, CCW From HPSI Pump P017 Pressure Safety/Relief Valve
(Code/Category 3/C) (1x1" Safety/Self Actuated) Dwg 40127E
RVT/10A (Note: 24)

2(3)PSV6330, CCW From Shutdown Heat Exchanger E003 Pressure Safety/Relief
(Code/Category 3/C) (2x2" Safety/Self Actuated) Dwg 40127E
RVT/10A (Note: 24)

2(3)PSV6333, CCW From CNTMT Spray Pump P013 Pressure Safety/Relief Valve
(Code/Category 3/C) (1x1" Safety/Self Actuated) Dwg 40127E
RVT/10A (Note: 24)

2(3)PSV6336, CCW From HPSI Pump P019 Pressure Safety/Relief Valve
(Code/Category 3/C) (1x1" Safety/Self Actuated) Dwg 40127E
RVT/10A (Note: 24)

2(3)PSV6339, CCW From HPSI Pump P018 Pressure Safety/Relief Valve
(Code/Category 3/C) (1x1" Safety/Self Actuated) Dwg 40127E
RVT/10A (Note: 24)

2(3)PSV6342, CCW From LPSI Pump P016 Pressure Safety/Relief Valve
(Code/Category 3/C) (1x1" Safety/Self Actuated) Dwg 40127E
RVT/10A (Note: 24)

2(3)PSV6356, CCW Surge Tank T003 Relief
(Code/Category 3/C) (1.5x2" Safety/Self Actuated) Dwg 40127B
RVT/10A

2(3)PSV6359, CCW Surge Tank T004 Relief
(Code/Category 3/C) (1.5x2" Safety/Self Actuated) Dwg 40127B
RVT/10A

Inservice Testing Program Valve List

COMPONENT COOLING WATER (Continued)

2(3)PSV6390A, CCW From Emergency Cooling Unit E400
(Code / Category 2/C) (1X1" Safety/Self Actuated) Dwg. 40172B
RVT/10A

2(3)PSV6390B, CCW From Emergency Cooling Unit E401
(Code / Category 2/C) (1X1" Safety/Self Actuated) Dwg 40172B
RVT/10A

2(3)PSV6390C, CCW From Emergency Cooling Unit E399
(Code / Category 2/C) (1X1" Safety/Self Actuated) Dwg 40172B
RVT/10A

2(3)PSV6390D, CCW From Emergency Cooling Unit E402
(Code / Category 2/C) (1X1" Safety/Self Actuated) Dwg 40172B
RVT/10A

2(3)PSV6392A, CCW To Emergency Cooling Unit E400
(Code/Category 3/C) (1x1" Safety/Self Actuated) Dwg 40172A
RVT/10A (Note: 24)

2(3)PSV6392B, CCW To Emergency Cooling Unit E401 Pressure Relief
(Code/Category 3/C) (1x1" Safety/Self Actuated) Dwg 40172A
RVT/10A (Note: 24)

2(3)PSV6392C, CCW To Emergency Cooling Unit E399
(Code/Category 3/C) (1x1" Safety/Self Actuated) Dwg 40172A
RVT/10A (Note: 24)

2(3)PSV6392D, CCW To Emergency Cooling Unit E402
(Code/Category 3/C) (1x1" Safety/Self Actuated) Dwg 40172A
RVT/10A (Note: 24)

2(3)PSV6393A, CCW To Emergency Cooling Unit E400
(Code / Category 2/C) (1X1" Safety/Self Actuated) Dwg 40172B
RVT/10A

2(3)PSV6393B, CCW To Emergency Cooling Unit E401
(Code / Category 2/C) (1X1" Safety/Self Actuated) Dwg 40172B
RVT/10A

2(3)PSV6393C, CCW To Emergency Cooling Unit E399
(Code / Category 2/C) (1X1" Safety/Self Actuated) Dwg 40172B
RVT/10A

Inservice Testing Program Valve List

COMPONENT COOLING WATER (Continued)

2(3)PSV6393D, CCW To Emergency Cooling Unit E402
(Code / Category 2/C) (1X1" Safety/Self Actuated) Dwg 40172B
RVT/10A

2(3)PSV6537, CCW From Letdown HX E062 Pressure Safety/Relief Valve
(Code/Category 3/C) (1x1" Safety/Self Actuated) Dwg 40123B
RVT/10A (Note: 24)

2(3)PSV6553, CCW From Post Accident Cleanup Unit E370 Pressure Safety/Relief Valve
(Code/Category 3/C) (1x1" Safety/Self Actuated) Dwg 40127E
RVT/10A (Note: 24)

2(3)PSV6554, CCW From Post Accident Cleanup Unit E371 Pressure Safety/Relief Valve
(Code/Category 3/C) (1x1" Safety/Self Actuated) Dwg 40127E
RVT/10A (Note: 24)

2(3)PSV7762, SPT Fuel Pool HT Exchgr E005 Shell Pressure Safety/Relief Valve
(Code/Category 3/C) (1x1" Safety/Self Actuated) Dwg 40171B
RVT/10A (Note: 24)

2(3)PSV7763, SPT Fuel Pool Heat Exchanger E006 Shell Pressure Safety/Relief Valve
(Code/Category 3/C) (1x1" Safety/Self Actuated) Dwg 40122C
RVT/10A (Note: 24)

2(3)PSV9155, CCW From RCP P001 Seal Heat Exchanger
(Code / Category 3/C) (¾X1" Safety/Self Actuated) Dwg 40130A
RVT/10A

2(3)PSV9165, CCW From RCP P002 Seal Heat Exchanger
(Code / Category 3/C) (¾X1" Safety/Self Actuated) Dwg 40130C
RVT/10A

2(3)PSV9175, CCW From RCP P003 Seal Heat Exchanger
(Code / Category 3/C) (¾X1" Safety/Self Actuated) Dwg 40130D
RVT/10A

2(3)PSV9185, CCW From RCP P004 Seal Heat Exchanger
(Code / Category 3/C) (¾X1" Safety/Self Actuated) Dwg 40130B
RVT/10A

Inservice Testing Program Valve List

COMPONENT COOLING WATER (Continued)

S2(3)1203MU101 (28-101-D-725), CCW Pump P024 Discharge Check Valve
(Code/Category 3/C) (28" Split Disc Check/Self Actuated) Dwg 40127A
CVTC/QT
CVTO/QT

S2(3)1203MU102 (28-102-D-725), CCW Pump P026 Discharge Check Valve
(Code/Category 3/C) (28" Split Disc Check/Self Actuated) Dwg 40127A
CVTC/QT
CVTO/QT

S2(3)1203MU103 (28-103-D-725), CCW Pump P025 Discharge Check Valve
(Code/Category 3/C) (28" Split Disc Check/Self Actuated) Dwg 40127A
CVTC/QT
CVTO/QT

S2(3)1203MU268 (1-268-D-627), Nuclear Service Water Supply to CCW Loop A
(Code/Category 3/C) (3" Check/Self Actuated) Dwg 40127B
CVTC/QT
BDTO/QT

S2(3)1203MU269 (1-269-D-627), Nuclear Service Water Supply to CCW Loop B
(Code/Category 3/C) (3" Check/Self Actuated) Dwg 40127B
CVTC/QT
BDTO/QT

S2(3)1203MU305 (3-305-D-681), CCW Emergency Makeup Check Valve
(Code/Category 3/C) (3" Check/Self Actuated) Dwg 40127B
CVTC/QT
BDTO/QT

S2(3)1203MU307 (3-307-D-681), CCW Emergency Makeup Check Valve - Tank MT004
(Code/Category 3/C) (3" Check/Self Actuated) Dwg 40127B
CVTC/QT
BDTO/QT

S2(3)1203MU736 (1 1/2-736-D-617), PPMU to CCW Train "A" Makeup Discharge
(Code/Category 3/C) (1-1/2" Check/Self Actuated) Dwg 40127J
CVTC/QT
CVTO/QT

S2(3)1203MU737 (1 1/2-737-D-617), PPMU to CCW Train "B" Makeup Discharge
(Code/Category 3/C) (1-1/2" Check/Self Actuated) Dwg 40127J
CVTC/QT
CVTO/QT

Inservice Testing Program Valve List

COMPONENT COOLING WATER (Continued)

2/3PSV6403, CCW To Emer Chiller E336 TR A Pressure Safety/Relief
(Code/Category 3/C) (1x1" Safety/Self Actuated) Dwg 40179A
RVT/10A (Note: 24)

CONDENSATE AND FEEDWATER

2/3PSV6409, CCW To Emer Chiller E335 TR B Pressure Safety/Relief
(Code/Category 3/C) (1x1" Safety/Self Actuated) Dwg 40180A
RVT/10A (Note: 24)

2(3)HV1105, Feedwater Bypass Valve for Steam Generator E089
(Code/Category NA/B) (6" Gate/Air) Dwg 40156B
BTC/CS (Notes: 3, 20)
FSTC/CS
PIT/2A

2(3)HV1106, Feedwater Bypass Valve for Steam Generator E088
(Code/Category NA/B) (6" Gate/Air) Dwg 40156B
BTC/CS (Notes: 3, 20)
FSTC/CS
PIT/2A

2(3)HV4047, Feedwater Block Valve - Steam Generator E088
(Code/Category NA/B) (16" Gate/Electro Hydraulic) Dwg 40156B
BTC/CS (Notes: 3, 20)
FSTC/CS
PIT/2A

2(3)HV4048, Feedwater Isolation Valve - Steam Generator E088
(Code/Category 2/B) (16" Gate/Electro Hydraulic) Dwg 40156B
BTC/CS (Note: 3)
FSTC/CS
PIT/2A

2(3)HV4051, Feedwater Block Valve - Steam Generator E089
(Code/Category NA/B) (16" Gate/Electro Hydraulic) Dwg 40156B
BTC/CS (Notes: 3, 20)
FSTC/CS
PIT/2A

2(3)HV4052, Feedwater Isolation Valve - Steam Generator E089
(Code/Category 2/B) (16" Gate/Electro Hydraulic) Dwg 40156B
BTC/CS (Note: 3)
FSTC/CS
PIT/2A

Inservice Testing Program Valve List

CONDENSATE AND FEEDWATER (Continued)

2(3)HV5715, Condensate Tank T120 Isolation Valve
(Code/Category NA/B) (6" Butterfly/Manual) Dwg 40150D
BMC/2A (Note: 20)

S2(3)1305MU036 (20-036-C-609), Main Feed Check at Steam Generator E089
(Code/Category 2/C) (20" Check/Self Actuated) Dwg 40141A
CVTC/RR (Note: 18)
BDTO/RR

S2(3)1305MU129 (20-129-C-609), Main Feed Check at Steam Generator E088
(Code/Category 2/C) (20" Check/Self Actuated) Dwg 40141A
CVTC/RR (Note: 18)
BDTO/RR

S2(3)1305MU476 (8-476-D-212), Header Supply to and from Condensate Storage Tank T121
(Code/Category 3/B) (8" Gate/Manual) Dwg 40150D
BMO/2A

S2(3)1414MU092 (8-092-W-212), Makeup Block Valve to Cond Storage Tanks T120 and T121
(Code/Category NA/B) (8" Gate/Manual) Dwg 40150D
BMC/2A (Note: 20)

S2(3)1417MU230 (10-230-R-214), Demin Water Transfer Line To T-121
(Code/Category NA/B) (10" Gate/Manual) Dwg 40150D
BMO/2A (Notes: 20, 23)

CONTAINMENT HVAC (NORMAL)

2(3)HV9821, Containment Isolation Valve - Minipurge Supply
(Code/Category 2/A) (8" Butterfly/Air) Dwg 40171A
AJ/SP
BTC/QT (Note: 3)
FSTC/QT
PIT/2A

2(3)HV9823, Containment Isolation Valve - Minipurge Supply
(Code/Category 2/A) (8" Butterfly/Air) Dwg 40171A
AJ/SP
BTC/QT (Note: 3)
FSTC/QT
PIT/2A

Inservice Testing Program Valve List

CONTAINMENT HVAC (NORMAL) (Continued)

2(3)HV9824, Containment Isolation Valve - Minipurge Exhaust
(Code/Category 2/A) (8" Butterfly/Air) Dwg 40171A
AJ/SP
BTC/QT (Note: 3)
FSTC/QT
PIT/2A

2(3)HV9825, Containment Isolation Valve - Minipurge Exhaust
(Code/Category 2/A) (8" Butterfly/Air) Dwg 40171A
AJ/SP
BTC/QT (Note: 3)
FSTC/QT
PIT/2A

2(3)HV9948, Containment Purge Supply
(Code/Category 2/A) (42" Butterfly/Air) Dwg 40171A
AJ/SP
BTC/CS (Note: 3)
FSTC/CS
PIT/2A

2(3)HV9949, Containment Purge Supply
(Code/Category 2/A) (42" Butterfly/Motor) Dwg 40171A
AJ/SP
BTC/CS (Note: 3)
PIT/2A

2(3)HV9950, Containment Purge Exhaust
(Code/Category 2/A) (42" Butterfly/Motor) Dwg 40171A
AJ/SP
BTC/CS (Note: 3)
PIT/2A

2(3)HV9951, Containment Purge Exhaust
(Code/Category 2/A) (42" Butterfly/Air) Dwg 40171A
AJ/SP
BTC/CS (Note: 3)
FSTC/CS
PIT/2A

Inservice Testing Program Valve List

CONTAINMENT SPRAY

2(3)HV8150, Isolation Valve - SDCS HX E004 to LPSI Header
(Code/Category 2/B) (10" Globe/Motor) Dwg 40114B
BMPO/CS (Note: 19)
BTC/CS
BTO/CS
PIT/2A

2(3)HV8151, Isolation Valve - SDCS HX E003 to LPSI Header
(Code/Category 2/B) (10" Globe/Motor) Dwg 40114B
BMPO/CS (Note: 19)
BTC/CS
BTO/CS
PIT/2A

2(3)HV9367, Containment Isolation Valve - Spray Header #1
(Code/Category 2/A) (8" Gate/Motor) Dwg 40114B
AJ/SP
BTC/QT
BTO/QT (Note: 3)
PIT/2A

2(3)HV9368, Containment Isolation Valve - Spray Header #2
(Code/Category 2/A) (8" Gate/Motor) Dwg 40114B
AJ/SP
BTC/QT
BTO/QT (Note: 3)
PIT/2A

S2(3)1206MU004 (8-004-C-406), Containment Isolation Stop Chk Valve - Spray Header #1
(Code/Category 2/AC) (8" Stop Check/Self Actuated) Dwg 40114B
AJ/SP
CVPO/RR (Note: 18)
CVTC/RR
CVTO/RR

S2(3)1206MU006 (8-006-C-406), Containment Isolation Stop Chk Valve - Spray Header #2
(Code/Category 2/AC) (8" Stop Check/Self Actuated) Dwg 40114B
AJ/SP
CVPO/RR (Note: 18)
CVTC/RR
CVTO/RR

Inservice Testing Program Valve List

CONTAINMENT SPRAY (Continued)

S2(3)1206MU010 (2-010-C-329), Pump P012 Miniflow Stop Check Valve
(Code/Category 2/C) (2" Stop Check/Self Actuated) Dwg 40114A
CVTC/RR
CVTO/RR

S2(3)1206MU011 (2-011-C-329), Pump P013 Miniflow Stop Check Valve
(Code/Category 2/C) (2" Stop Check/Self Actuated) Dwg 40114A
CVTC/RR
CVTO/RR

S2(3)1206MU012 (8-012-C-406), Spray Pump P012 Discharge Stop Check Valve
(Code/Category 2/C) (8" Stop Check/Self Actuated) Dwg 40114A
CVTC/RR (Note: 16)
CVTO/RR

S2(3)1206MU014 (8-014-C-406), Spray Pump P013 Discharge Stop Check Valve
(Code/Category 2/C) (8" Stop Check/Self Actuated) Dwg 40114A
CVTC/RR (Note: 16)
CVTO/RR

S2(3)1206MU029 (8-029-C-645), Spray Pump P012 Discharge Check Valve to SDCS HX E004
(Code/Category 2/C) (8" Check/Self Actuated) Dwg 40114A
CVTC/RR (Note: 16)
CVTO/RR

S2(3)1206MU030 (8-030-C-645), Spray Pump P013 Discharge Check Valve to SDCS HX E003
(Code/Category 2/C) (8" Check/Self Actuated) Dwg 40114A
CVTC/RR (Note: 16)
CVTO/RR

DIESEL AIR START

NOTE: These valves are non-code skid mounted valves located in the Diesel Generator Air Start System. They have a safety function and therefore require periodic surveillance. Skid-mounted valves are excluded from the IST Program provided they are tested as part of the major component and are justified to be adequately tested. Proper operation is verified during normal scheduled surveillances. [Reference 2.1.3, OM-ISTC 1200(c)]

Inservice Testing Program Valve List

DIESEL FUEL OIL

S2(3)2421MU039 (2-039-D-627), Diesel Fuel Oil Trans Pump P096 Disch Chk Valve (Code/Category 3/C) (2" Check/Self Actuated) Dwg 40116A
CVTC/QT
CVTO/QT

S2(3)2421MU048 (2-048-D-627), Diesel Fuel Oil Trans Pump P093 Disch Chk Valve (Code/Category 3/C) (2" Check/Self Actuated) Dwg 40116A
CVTC/QT
CVTO/QT

S2(3)2421MU054 (2-054-D-627), Diesel Fuel Oil Trans Pump P095 Disch Chk Valve (Code/Category 3/C) (2" Check/Self Actuated) Dwg 40116A
CVTC/QT
CVTO/QT

S2(3)2421MU063 (2-063-D-627), Diesel Fuel Oil Trans Pump P094 Disch Chk Valve (Code/Category 3/C) (2" Check/Self Actuated) Dwg 40116A
CVTC/QT
CVTO/QT

DIESEL GENERATOR

S2(3)PSV5921A, Diesel Gen G002 Air Receiver
(Code/Category 3/C) (0.5" Safety/Self Actuated) Dwg 40110E
RVT/10A (Note: 24)

S2(3)PSV5921B, Diesel Gen G002 Air Receiver
(Code/Category 3/C) (0.5" Safety/Self Actuated) Dwg 40110E
RVT/10A (Note: 24)

S2(3)PSV5921C, Diesel Gen G003 Air Receiver
(Code/Category 3/C) (0.5" Safety/Self Actuated) Dwg 40110E
RVT/10A (Note: 24)

S2(3)PSV5921D, Diesel Gen G003 Air Receiver
(Code/Category 3/C) (0.5" Safety/Self Actuated) Dwg 40110E
RVT/10A (Note: 24)

S2(3)PSV5950A, Diesel Gen G002 T-162 Exp TK
(Code/Category 3/C) (1.5x2" Safety/Self Actuated) Dwg 40110A
RVT/10A (Note: 24)

S2(3)PSV5950B, Diesel Gen G002 T-190 Exp TK
(Code/Category 3/C) (1.5x2" Safety/Self Actuated) Dwg 40110B
RVT/10A (Note: 24)

Inservice Testing Program Valve List

DIESEL GENERATOR (Continued)

S2(3)PSV5950C, Diesel Gen G003 T-161 Exp TK
(Code/Category 3/C) (1.5x2" Safety/Self Actuated) Dwg 40110C
RVT/10A (Note: 24)

S2(3)PSV5950D, Diesel Gen G003 T-189 Exp TK
(Code/Category 3/C) (1.5x2" Safety/Self Actuated) Dwg 40110D
RVT/10A (Note: 24)

S2(3)2420MU120 (*-120-P-*), Engine Sump Turbo Supply Check Valve
(Code/Category NA/C) (3/4" Check/Self Actuated) Dwg 40110B
CVTO/2A (Notes: 20, 25)
BDTC/2A

S2(3)2420MU121 (*-121-P-*), Engine Sump Turbo Supply Check Valve
(Code/Category NA/C) (3/4" Check/Self Actuated) Dwg 40110B
CVTO/2A (Notes: 20, 25)
CVTC/2A (Notes: 18, 20, 25)

S2(3)2420MU126 (*-126-D-*), Right Bank Air Supply Check Valve
(Code/Category NA/C) (3/8" Check/Self Actuated) Dwg 40110B
CVTO/6A (Notes: 18, 20, 25)
CVTC/6A (Notes: 18, 20, 25)

S2(3)2420MU127 (3/8-127-D-*),DG Gov Air Boost 3-Way Valve
(Code/Category NA/C) (3/8" 3-Way Check/Self Actuated) Dwg 40110C
CVTO/4A (Notes: 18, 20, 25)
CVTC/4A (Notes: 18, 20, 25)

S2(3)2420MU128 (*-128-D-*), Left Bank Air Supply Check Valve
(Code/Category NA/C) (3/8" Check/Self Actuated) Dwg 40110C
CVTO/6A (Notes: 18, 20, 25)
CVTC/6A (Notes: 18, 20, 25)

S2(3)2420MU130 (*-130-D-*), Fuel Priming Pump Supply Header Check Valve
(Code/Category NA/C) (5/8" Check/Self Actuated) Dwg 40110B
CVTC/4A (Notes: 18, 20, 25)
BDTO/4A

S2(3)2420MU134 (*-134-D-*), Right Bank Air Supply Check Valve
(Code/Category NA/C) (3/8" Check/Self Actuated) Dwg 40110C
CVTO/6A (Notes: 18, 20, 25)
CVTC/6A (Notes: 18, 20, 25)

Inservice Testing Program Valve List

DIESEL GENERATOR (Continued)

S2(3)2420MU135 (1-1/2-135-Z-*), Diesel Air Receiver T-338 Air Inlet Check Valve (Code/Category NA/C) (1-1/2" Check/Self Actuated) Dwg 40110F
CVTC/QT (Note: 20)
BDTO/QT

S2(3)2420MU136 (*-136-P-*), Engine Sump Turbo Supply Check Valve (Code/Category NA/C) (3/4" Check/Self Actuated) Dwg 40110D
CVTO/2A (Note: 20, 25)
BDTC/2A

S2(3)2420MU137 (3/8-137-D-*),DG Gov Air Boost 3-Way Valve (Code/Category NA/C) (3/8" 3-Way Check/Self Actuated) Dwg 40110B
CVTO/4A (Notes: 18, 20, 25)
CVTC/4A (Notes: 18, 20, 25)

S2(3)2420MU138 (*-138-D-*), Left Bank Air Supply Check Valve (Code/Category NA/C) (3/8" Check/Self Actuated) Dwg 40110B
CVTO/6A (Notes: 18, 20, 25)
CVTC/6A (Notes: 18, 20, 25)

S2(3)2420MU139 (3/8-139-D-*),DG Gov Air Boost 3-Way Valve (Code/Category NA/C) (3/8" 3-Way Check/Self Actuated) Dwg 40110D
CVTO/4A (Notes: 18, 20, 25)
CVTC/4A (Notes: 18, 20, 25)

S2(3)2420MU140 (*-140-P-*), Engine Sump Turbo Supply Check Valve (Code/Category NA/C) (3/4" Check/Self Actuated) Dwg 40110A
CVTO/2A (Note: 20, 25)
BDTC/2A

S2(3)2420MU141 (*-141-P-*), Engine Sump Turbo Supply Check Valve (Code/Category NA/C) (3/4" Check/Self Actuated) Dwg 40110A
CVTO/2A (Note: 20, 25)
CVTC/2A (Notes: 18, 20, 25)

S2(3)2420MU145 (*-145-P-*), Engine Sump Turbo Supply Check Valve (Code/Category NA/C) (3/4" Check/Self Actuated) Dwg 40110D
CVTO/2A (Note: 20, 25)
CVTC/2A (Notes: 18, 20, 25)

S2(3)2420MU146 (1 1/2-146-Z-*), Diesel Air Receiver T-335 Air Inlet Check Valve (Code/Category NA/C) (1-1/2" Check/Self Actuated) Dwg 40110E
CVTC/QT (Note: 20)
BDTO/QT

Inservice Testing Program Valve List

DIESEL GENERATOR (Continued)

S2(3)2420MU150 (*-150-D-*), Fuel Priming Pump Supply Header Check Valve
(Code/Category NA/C) (5/8" Check/Self Actuated) Dwg 40110A
CVTC/4A (Notes: 18, 20, 25)
BDTO/4A

S2(3)2420MU155 (*-155-D-*), Right Bank Air Supply Check Valve
(Code/Category NA/C) (3/8" Check/Self Actuated) Dwg 40110D
CVTO/6A (Notes: 18, 20, 25)
CVTC/6A (Notes: 18, 20, 25)

S2(3)2420MU157 (3/8-157-D-*), DG Gov Air Boost 3-Way Valve
(Code/Category NA/C) (3/8" 3-Way Check/Self Actuated) Dwg 40110A
CVTO/4A (Notes: 18, 20, 25)
CVTC/4A (Notes: 18, 20, 25)

S2(3)2420MU158 (*-158-D-*), Left Bank Air Supply Check Valve
(Code/Category NA/C) (3/8" Check/Self Actuated) Dwg 40110A
CVTO/6A (Notes: 18, 20, 25)
CVTC/6A (Notes: 18, 20, 25)

S2(3)2420MU159 (*-159-D-*), Right Bank Air Supply Check Valve
(Code/Category NA/C) (3/8" Check/Self Actuated) Dwg 40110A
CVTO/6A (Notes: 18, 20, 25)
CVTC/6A (Notes: 18, 20, 25)

S2(3)2420MU160 (1 1/2-160-Z-*), Diesel Air Receiver T-336 Air Inlet Check Valve
(Code/Category NA/C) (1-1/2" Check/Self Actuated) Dwg 40110E
CVTC/QT (Note: 20)
BDTO/QT

S2(3)2420MU161 (*-161-D-*), Left Bank Air Supply Check Valve
(Code/Category NA/C) (3/8" Check/Self Actuated) Dwg 40110D
CVTO/6A (Notes: 18, 20, 25)
CVTC/6A (Notes: 18, 20, 25)

S2(3)2420MU162 (*-162-P-*), Engine Sump Turbo Supply Check Valve
(Code/Category NA/C) (3/4" Check/Self Actuated) Dwg 40110C
CVTO/2A (Notes: 20, 25)
BDTC/2A

S2(3)2420MU163 (*-163-P-*), Engine Sump Turbo Supply Check Valve
(Code/Category NA/C) (3/4" Check/Self Actuated) Dwg 40110C
CVTO/2A (Notes: 20, 25)
CVTC/2A (Notes: 18, 20, 25)

Inservice Testing Program Valve List

DIESEL GENERATOR (Continued)

S2(3)2420MU167 (*-167-D-*), Fuel Priming Pump Supply Header Check Valve
(Code/Category NA/C) (5/8" Check/Self Actuated) Dwg 40110D
CVTC/4A (Notes: 18, 20, 25)
BDTO/4A

S2(3)2420MU168 (1 1/2-168-Z-*), Diesel Air Receiver T-337 Air Inlet Check Valve
(Code/Category NA/C) (1-1/2" Check/Self Actuated) Dwg 40110F
CVTC/QT (Note: 20)
BDTO/QT

S2(3)2420MU172 (*-172-D-*), Fuel Priming Pump Supply Header Check Valve
(Code/Category NA/C) (5/8" Check/Self Actuated) Dwg 40110C
CVTC/4A (Notes: 18, 20, 25)
BDTO/4A

S2(3)2420MU289 (*-289-D-*), Downstream Chk Vlv, DC Auxiliary Turbo Pump P495
(Code/Category NA/C) (1" Check/Self Actuated) Dwg 40110B
CVTO/2A (Notes: 20, 25)
BDTC/2A

S2(3)2420MU290 (*-290-D-*), Downstream Check Valve, Y-Strainer MF1334
(Code/Category NA/C) (1" Check/Self Actuated) Dwg 40110B
CVTO/4A (Notes: 20, 25)
BDTC/4A

S2(3)2420MU291 (*-291-D-*), Downstream Check Valve, AC Lub Oil Turbo Pump P1015
(Code/Category NA/C) (1" Check/Self Actuated) Dwg 40110B
CVTO/2A (Notes: 20, 25)
BDTC/2A

S2(3)2420MU292 (*-292-D-*), Downstream Check Valve, DC Auxiliary Turbo Pump P494
(Code/Category NA/C) (1" Check/Self Actuated) Dwg 40110A
CVTO/2A (Notes: 20, 25)
BDTC/2A

S2(3)2420MU293 (*-293-D-*), Downstream Check Valve, Y-Strainer MF1333
(Code/Category NA/C) (1" Check/Self Actuated) Dwg 40110B
CVTO/4A (Notes: 20, 25)
BDTC/4A

S2(3)2420MU294 (*-294-D-*), Downstream Chk Vlv, AC Lube Oil Turbo Pump P1014
(Code/Category NA/C) (1" Check/Self Actuated) Dwg 40110A
CVTO/2A (Notes: 20, 25)
BDTC/2A

Inservice Testing Program Valve List

DIESEL GENERATOR (Continued)

S2(3)2420MU295 (*-295-D-*), Downstream Chk Vlv, DC Auxiliary Turbo Pump P497
(Code/Category NA/C) (1" Check/Self Actuated) Dwg 40110D
CVTO/2A (Notes: 20, 25)
BDTC/2A

S2(3)2420MU296 (*-296-D-*), Downstream Chk Vlv, Y-Strainer MF1336
(Code/Category NA/C) (1" Check/Self Actuated) Dwg 40110D
CVTO/4A (Notes: 20, 25)
BDTC/4A

S2(3)2420MU297 (*-297-D-*), Downstream Chk Vlv, AC Lube Oil Turbo Pump P1017
(Code/Category NA/C) (1" Check/Self Actuated) Dwg 40110D
CVTO/2A (Notes: 20, 25)
BDTC/2A

S2(3)2420MU298 (*-298-D-*), Downstream Chk Vlv, DC Auxiliary Turbo Pump P496
(Code/Category NA/C) (1" Check/Self Actuated) Dwg 40110C
CVTO/2A (Notes: 20, 25)
BDTC/2A

S2(3)2420MU299 (*-299-D-*), Downstream Check Valve, Y-Strainer MF1335
(Code/Category NA/C) (1" Check/Self Actuated) Dwg 40110C
CVTO/4A (Notes: 20, 25)
BDTC/4A

S2(3)2420MU300 (*-300-D-*), Downstream Chk Vlv, AC Lube Oil Turbo Pump P1016
(Code/Category NA/C) (1" Check/Self Actuated) Dwg 40110C
CVTO/2A (Notes: 20, 25)
BDTC/2A

ESFAS

2(3)HV0352A, Containment Pressure Sensing Line Isolation Valve
(Code/Category 2/B) (3/4" Globe/Solenoid) Dwg 40172A
BTC/QT
PIT/2A

2(3)HV0352B, Containment Pressure Sensing Line Isolation Valve
(Code/Category 2/B) (3/4" Globe/Solenoid) Dwg 40172A
BTC/QT
PIT/2A

Inservice Testing Program Valve List

ESFAS (Continued)

2(3)HV0352C, Containment Pressure Sensing Line Isolation Valve
(Code/Category 2/B) (3/4" Globe/Solenoid) Dwg 40172A
BTC/QT
PIT/2A

2(3)HV0352D, Containment Pressure Sensing Line Isolation Valve
(Code/Category 2/B) (3/4" Globe/Solenoid) Dwg 40172A
BTC/QT
PIT/2A

FIRE PROTECTION

2(3)HV5686, Contmt Isolation Valve, Outside - Fire Prot. System Water
(Code/Category 2/A) (3" Gate/Motor) Dwg 40184B
AJ/SP
BTC/QT (Note: 3)
PIT/2A

SA2301MU061 (4-061-C-681), Check Valve Downstream of Pen 14/Unit 2
(Code/Category 2/AC) (4" Check/Self Actuated) Dwg 40184B
AJ/SP
CVTC/RR
BDTO/RR

SA2301MU095 (4-095-C-681), Check Valve Downstream of Penetration 14
(Code/Category 2/AC) (4" Check/Self Actuated) Dwg 40189BSO3
AJ/SP
CVTC/RR
BDTO/RR

FUEL STORAGE POOL AND REFUELING

2(3)LV0227C, RWST To Charging Pump Suction
(Code/Category 2/B) (3" Gate/Motor) Dwg 40124B
BMPO/CS (Note: 19)
BTO/CS
BTC/CS
PIT/2A

S2(3)1219MU052 (6-052-C-675), RWST T006 to Charging Pump Suction Header
(Code/Category 2/C) (6" Check/Self Actuated) Dwg 40124B
CVTC/CS
CVTO/CS

Inservice Testing Program Valve List

FUEL STORAGE POOL AND REFUELING (Continued)

S2(3)1219MU070, Outlet Valve from T006 Refueling Tank to P011 Spent Fuel Pool Makeup Pump
(Code/Category 2/B) (4" Gate/Manual) Dwg 40122B
BMC/2A

S2(3)1219MU100 (10-100-C-212), Refueling Pool Outlet Inside Containment
(Code/Category 2/A) (10" Gate/Manual) Dwg 40122A
AJ/SP
PIT/2A

S2(3)1219MU101 (10-101-C-212), Refueling Pool Outlet Outside Containment to Pump P014
(Code/Category 2/A) (10" Gate/Manual) Dwg 40122A
AJ/SP
PIT/2A

GAS RADWASTE

2(3)HV7258, Containment Isolation - Waste Gas to Surge Tank
(Code/Category 2/A) (3" Gate/Motor) Dwg 40131A
AJ/SP
BTC/QT (Note: 3)
PIT/2A

2(3)HV7259, Containment Isolation - Safety Injection Tank Vent Header
(Code/Category 2/A) (3" Globe/Air) Dwg 40131A
AJ/SP
BTC/QT (Note: 3)
FSTC/QT
PIT/2A

LIQUID RADWASTE

2(3)HV7512, RCDT Pump Discharge from Containment to Radwaste
(Code/Category 2/A) (3" Gate/Motor) Dwg 40131A
AJ/SP
BTC/QT (Note: 3)
PIT/2A

Inservice Testing Program Valve List

LIQUID RADWASTE (Continued)

2(3)HV7513, Containment Isolation - RCS Drain to Radwaste
(Code/Category 2/A) (3" Globe/Air) Dwg 40131A
AJ/SP
BTC/QT (Note: 3)
FSTC/QT
PIT/2A

2/3PSV7516, Reactor Coolant Drain Filter Relief
(Code / Category NA/C) (1X1" Safety/Self Actuated) Dwg 40131B
RVT/10A (Notes: 2, 24)

S2(3)1901MU321 (2-321-C-376), Isolation Valve - Polishing Demin to Quench Tk
(Code/Category 2/A) (2" Globe/Manual) Dwg 40111C
AJ/SP
PIT/2A

S2(3)1901MU573 (2-573-C-611), Chk Vlv - Coolant Polishing Demin to Quench Tk
(Code/Category 2/AC) (2" Check/Self Actuated) Dwg 40111C
AJ/SP

NITROGEN GAS

2(3)HV5434, Nitrogen to Safety Injection Tanks
(Code/Category 2/A) (2" Globe/Air) Dwg 40192C
AJ/SP
BTC/QT (Note: 3)
FSTC/QT
PIT/2A

2(3)HV5437, Nitrogen Supply to Containment
(Code/Category 2/A) (3/4" Globe/Air) Dwg 40192C
AJ/SP
BTC/QT (Note: 3)
FSTC/QT
PIT/2A

2(3)PSV5403, Nitrogen Gas Relief Valve, Train "A" CCW Surge Tank T003
(Code/Category NA/C) (1-1/2x3" Safety/Self Actuated) Dwg 40127B
RVT/10S (Note: 2)

2(3)PSV5404, Nitrogen Gas Relief Valve, Train "B" CCW Surge Tank T004
(Code/Category NA/C) (1-1/2x3" Safety/Self Actuated) Dwg 40127B
RVT/10S (Note: 2)

Inservice Testing Program Valve List

NITROGEN GAS (Continued)

2(3)PSV6414, Train "A" Backup Nitrogen Header Relief, CCW Surge Tank
(Code/Category NA/C) (1-1/2x3" Safety/Self Actuated) Dwg 40127H
RVT/10S (Note: 2)

2(3)PSV6420, Train "B" Backup Nitrogen Header Relief, CCW Surge Tank
(Code/Category NA/C) (1-1/2x3" Safety/Self Actuated) Dwg 40127H
RVT/10S (Note: 2)

2(3)PSV8451, ADV Instrument Air Header Relief Valve
(Code/Category 2/C) (3/4" x 1" Safety/Self Activated) Dwg 40141D
RVT/10S

2(3)PSV8457, ADV Instrument Air Header Relief Valve
(Code/Category 2/C) (3/4" x 1" Safety/Self Activated) Dwg 40141C
RVT/10S

S2(3)2418MU002 (3/4-002-C-639), Nitrogen Supply to Containment
(Code/Category 2/AC) (3/4" Check/Self Actuated) Dwg 40192C
AJ/SP
CVTC/RR
BDTO/RR

S2(3)2418MU108 (2-108-C-627), Nitrogen Supply to Safety Injection Tanks
(Code/Category 2/AC) (2" Check/Self Actuated) Dwg 40192C
AJ/SP
CVTC/RR
BDTO/RR

S2(3)2418MU356 (3/8-356-P-913), Backup Nitrogen Cylinder MV-057 Check Valve
(Code/Category NA/C) (3/8" Check/Self Actuated) Dwg 40127H
CVTO/CS (Note: 20)
BDTC/CS

S2(3)2418MU358 (3/8-358-P-913), Backup Nitrogen Cylinder MV-058 Check Valve
(Code/Category NA/C) (3/8" Check/Self Actuated) Dwg 40127H
CVTO/CS (Note: 20)
BDTC/CS

S2(3)2418MU360 (3/8-360-P-913), Backup Nitrogen Cylinder MV-059 Check Valve
(Code/Category NA/C) (3/8" Check/Self Actuated) Dwg 40127H
CVTO/CS (Note: 20)
BDTC/CS

Inservice Testing Program Valve List

NITROGEN GAS (Continued)

S2(3)2418MU362 (3/8-362-P-913), Backup Nitrogen Cylinder MV-060 Check Valve (Code/Category NA/C) (3/8" Check/Self Actuated) Dwg 40127H
CVTO/CS (Note: 20)
BDTC/CS

S2(3)2418MU364 (3/8-364-P-913), Backup Nitrogen Cylinder MV-061 Check Valve (Code/Category NA/C) (3/8" Check/Self Actuated) Dwg 40127H
CVTO/CS (Note: 20)
BDTC/CS

S2(3)2418MU366 (3/8-366-P-913), Backup Nitrogen Cylinder MV-062 Check Valve (Code/Category NA/C) (3/8" Check/Self Actuated) Dwg 40127H
CVTO/CS (Note: 20)
BDTC/CS

S2(3)2418MU368 (3/8-368-P-913), Backup Nitrogen Cylinder MV-063 Check Valve (Code/Category NA/C) (3/8" Check/Self Actuated) Dwg 40127H
CVTO/CS (Note: 20)
BDTC/CS

S2(3)2418MU371 (3/8-371-P-913), Backup Nitrogen Cylinder MV-064 Check Valve (Code/Category NA/C) (3/8" Check/Self Actuated) Dwg 40127H
CVTO/CS (Note: 20)
BDTC/CS

S2(3)2418MU373 (3/8-373-P-913), Backup Nitrogen Cylinder MV-065 Check Valve (Code/Category NA/C) (3/8" Check/Self Actuated) Dwg 40127H
CVTO/CS (Note: 20)
BDTC/CS

S2(3)2418MU375 (3/8-375-P-913), Backup Nitrogen Cylinder MV-066 Check Valve (Code/Category NA/C) (3/8" Check/Self Actuated) Dwg 40127H
CVTO/CS (Note: 20)
BDTC/CS

S2(3)2418MU377 (3/8-377-P-913), Backup Nitrogen Cylinder MV-067 Check Valve (Code/Category NA/C) (3/8" Check/Self Actuated) Dwg 40127H
CVTO/CS (Note: 20)
BDTC/CS

S2(3)2418MU379 (3/8-379-P-913), Backup Nitrogen Cylinder MV-068 Check Valve (Code/Category NA/C) (3/8" Check/Self Actuated) Dwg 40127H
CVTO/CS (Note: 20)
BDTC/CS

Inservice Testing Program Valve List

NITROGEN GAS (Continued)

S2(3)2418MU387 (3/8-387-P-913), Backup Nitrogen Cylinder MV-069 Check Valve (Code/Category NA/C) (3/8" Check/Self Actuated) Dwg 40127H
CVTO/CS (Note: 20)
BDTC/CS

S2(3)2418MU389 (3/8-389-P-913), Backup Nitrogen Cylinder MV-070 Check Valve (Code/Category NA/C) (3/8" Check/Self Actuated) Dwg 40127H
CVTO/CS (Note: 20)
BDTC/CS

S2(3)2418MU398 (1-398-D-627), Nitrogen Supply to Component Cooling Water Surge Tank T004B
(Code/Category NA/AC) (1" Check/Self Actuated) Dwg 40127B
AT/2A (Note: 20)
CVTC/RR
BDTO/RR

S2(3)2418MU402 (1-402-D-627), Nitrogen Supply to Component Cooling Water Surge Tank T003A
(Code/Category NA/AC) (1" Check/Self Actuated) Dwg 40127B
AT/2A (Note: 20)
CVTC/RR
BDTO/RR

S2(3)2418MU406 (3/8-406-P-913), Backup Nitrogen Cylinder MV-102 Check Valve (Code/Category NA/C) (3/8" Check/Self Actuated) Dwg 40127H
CVTO/CS (Note: 20)
BDTC/CS

S2(3)2418MU408 (3/8-408-P-913), Backup Nitrogen Cylinder MV-103 Check Valve (Code/Category NA/C) (3/8" Check/Self Actuated) Dwg 40127H
CVTO/CS (Note: 20)
BDTC/CS

S2(3)2418MU410 (3/8-410-P-913), Backup Nitrogen Cylinder MV-104 Check Valve (Code/Category NA/C) (3/8" Check/Self Actuated) Dwg 40127H
CVTO/CS (Note: 20)
BDTC/CS

S2(3)2418MU412 (3/8-412-P-913), Backup Nitrogen Cylinder MV-105 Check Valve (Code/Category NA/C) (3/8" Check/Self Actuated) Dwg 40127H
CVTO/CS (Note: 20)
BDTC/CS

Inservice Testing Program Valve List

NITROGEN GAS (Continued)

S2(3)2418MU414 (3/8-414-P-913), Backup Nitrogen Cylinder MV-106 Check Valve (Code/Category NA/C) (3/8" Check/Self Actuated) Dwg 40127H
CVTO/CS (Note: 20)
BDTC/CS

S2(3)2418MU416 (3/8-416-P-913), Backup Nitrogen Cylinder MV-107 Check Valve (Code/Category NA/C) (3/8" Check/Self Actuated) Dwg 40127H
CVTO/CS (Note: 20)
BDTO/CS

NUCLEAR SAMPLING

2(3)HV0508, Containment Isolation - RCS Hot Leg (Code/Category 2/A) (3/4" Globe/Motor) Dwg 40134A
AJ/SP
BTC/QT (Note: 3)
PIT/2A

2(3)HV0509, Containment Isolation - RCS Hot Leg (Code/Category 2/A) (3/4" Globe/Air) Dwg 40134A
AJ/SP
BTC/QT (Note: 3)
FSTC/QT
PIT/2A

2(3)HV0510, Containment Isolation - Pressurizer Vapor Sample Line (Code/Category 2/A) (3/4" Globe/Motor) Dwg 40134A
AJ/SP
BTC/QT (Note: 3)
PIT/2A

2(3)HV0511, Containment Isolation - Pressurizer Vapor Sample Line (Code/Category 2/A) (3/4" Globe/Air) Dwg 40134A
AJ/SP
BTC/QT (Note: 3)
FSTC/QT
PIT/2A

2(3)HV0512, Containment Isolation - Pressurizer Surge Line Sample (Code/Category 2/A) (3/4" Globe/Motor) Dwg 40134A
AJ/SP
BTC/QT (Note: 3)
PIT/2A

Inservice Testing Program Valve List

NUCLEAR SAMPLING (Continued)

2(3)HV0513, Containment Isolation - Pressurizer Surge Line Sample
(Code/Category 2/A) (3/4" Globe/Air) Dwg 40134A
AJ/SP
BTC/QT (Note: 3)
FSTC/QT
PIT/2A

2(3)HV0514, Isolation Valve - Quench Tank to Waste Gas System
(Code/Category 2/A) (3/4" Globe/Motor) Dwg 40111C
AJ/SP
BTC/QT (Note: 3)
PIT/2A

2(3)HV0515, Isol. Valve - Quench Tank/RCDT to Waste Gas Sampling System
(Code/Category 2/A) (3/4" Globe/Air) Dwg 40111C
AJ/SP
BTC/QT (Note: 3)
FSTC/QT
PIT/2A

2(3)HV0516, Isolation Valve - RCDT to Waste Gas Sampling System
(Code/Category 2/A) (3/4" Globe/Motor) Dwg 40111C
AJ/SP
BTC/QT (Note: 3)
PIT/2A

2(3)HV0517, RCS Hot Leg #2 Sample Isolation Valve
(Code/Category 2/A) (3/4" Globe/Motor) Dwg 40134A
AJ/SP
BTC/QT (Note: 3)
PIT/2A

2(3)HV0588B, Safety Injection Pump Recirc Line Emergency Sample Valve
(Code/Category 2/A) (1" Globe/Solenoid) Dwg 40134D
AT/2A
BTC/QT
FSTC/QT
PIT/2A

2(3)HV7800, Containment Airborne Rad Monitor Train "A" Isol (Pen 30B)
(Code/Category 2/A) (3/4" Globe/Solenoid) Dwg 40170A
AJ/SP
BTC/QT (Note: 3)
FSTC/QT
PIT/2A

Inservice Testing Program Valve List

NUCLEAR SAMPLING (Continued)

2(3)HV7801, Containment Airborne Rad Monitor Train "A" Isol (Pen 30B)
(Code/Category 2/A) (3/4" Globe/Solenoid) Dwg 40170A
AJ/SP
BTC/QT (Note: 3)
FSTC/QT
PIT/2A

2(3)HV7802, Containment Airborne Rad Monitor Train "A" Isol (Pen 30A)
(Code/Category 2/A) (3/4" Globe/Solenoid) Dwg 40170A
AJ/SP
BTC/QT (Note: 3)
FSTC/QT
PIT/2A

2(3)HV7803, Containment Airborne Rad Monitor Train "B" Isol (Pen 3A)
(Code/Category 2/A) (3/4" Globe/Solenoid) Dwg 40170A
AJ/SP
BTC/QT (Note: 3)
FSTC/QT
PIT/2A

2(3)HV7805, Containment Isolation - Airborne Rad Monitor Train "B"
(Code/Category 2/A) (3/4" Globe/Solenoid) Dwg 40170A
AJ/SP
BTC/QT (Note: 3)
FSTC/QT
PIT/2A

2(3)HV7806, Containment Isolation - Airborne Rad Monitor Train "B"
(Code/Category 2/A) (3/4" Globe/Solenoid) Dwg 40170A
AJ/SP
BTC/QT (Note: 3)
FSTC/QT
PIT/2A

2(3)HV7810, Containment Airborne Rad Monitor Train "B" Isol (Pen 16C)
(Code/Category 2/A) (3/4" Globe/Solenoid) Dwg 40170A
AJ/SP
BTC/QT (Note: 3)
FSTC/QT
PIT/2A

Inservice Testing Program Valve List

NUCLEAR SAMPLING (Continued)

2(3)HV7811, Containment Airborne Rad Monitor Train "B" Isol (Pen 27C)
(Code/Category 2/A) (3/4" Globe/Solenoid) Dwg 40170A
AJ/SP
BTC/QT (Note: 3)
FSTC/QT
PIT/2A

2(3)HV7816, Contmt Isolation - Airborne Rad Monitor Emergency Sample
(Code/Category 2/A) (3/4" Globe/Solenoid) Dwg 40170A
AJ/SP
BTC/QT (Note: 3)
FSTC/QT
PIT/2A

S2(3)1212MU010 (1/2-010-C-335), Isolation Valve - SI Sys to Central Liq Sample System
(Code/Category 2/A) (1/2" Globe/Manual) Dwg 40134D
AT/2A
BMC/2A

S2(3)1212MU261 (1-261-C-556), SI Sys Lp B to Central Liq Sample System Check Valve
(Code/Category 2/AC) (1" Check/Self Actuated) Dwg 40114D
AT/2A
CVTC/RR
BDTO/RR

S2(3)1212MU262 (1-262-C-556), SI Sys Lp A to Central Liq Sample System Check Valve
(Code/Category 2/AC) (1" Check/Self Actuated) Dwg 40114D
AT/2A
CVTC/RR
BDTO/RR

S21212MU580 (2-580-C-556), Nuc Serv Wtr to Liq Sample System
(Code/Category 2/AC) (2" Check/Self Actuated) Dwg 40134D
AT/2A
CVTC/RR
BDTO/RR

S31212MU580 (2-580-C-556), Nuc Serv Wtr to Liq Sample System
(Code/Category 2/AC) (1" Check/Self Actuated) Dwg 40134DS03
AT/2A
CVTC/RR
BDTO/RR

Inservice Testing Program Valve List

NUCLEAR SERVICE WATER

2(3)HV7911, Containment Isolation - Nuclear Service Water
(Code/Category 2/A) (3" Globe/Air) Dwg 40140B
AJ/SP
BTC/QT (Note: 3)
FSTC/QT
PIT/2A

2(3)PSV9066, Nuclear Service Water to Containment
(Code/Category NA/C) (½X1" Safety/Self Actuated) Dwg 40140B
RVT/10S (Note: 2)

S2(3)1415MU236 (3-236-C-675), Cont. Isolation Chk Vlv - Nuclear Service Water
(Code/Category 2/AC) (3" Check/Self Actuated) Dwg 40140B
AJ/SP
CVTC/RR
BDTO/RR

REACTOR COOLANT

2(3)HV0296A, Reactor Head Vent
(Code/Category 2/B) (1" Globe/Solenoid) Dwg 40111C
BTC/CS
BTO/CS
FSTC/CS
PIT/2A

2(3)HV0296B, Reactor Head Vent
(Code/Category 2/B) (1" Globe/Solenoid) Dwg 40111C
BTC/CS
BTO/CS
FSTC/CS
PIT/2A

2(3)HV0297A, Pressurizer Vent Valve
(Code/Category 2/B) (1" Globe/Solenoid) Dwg 40111C
BTC/CS
BTO/CS
FSTC/CS
PIT/2A

Inservice Testing Program Valve List

REACTOR COOLANT (Continued)

2(3)HV0297B, Pressurizer Vent Valve
(Code/Category 2/B) (1" Globe/Solenoid) Dwg 40111C
BTC/CS
BTO/CS
FSTC/CS
PIT/2A

2(3)HV0298, Vent to Contmt from Reactor Head/Pressurizer
(Code/Category 2/B) (1" Globe/Solenoid) Dwg 40111C
BTC/CS
BTO/CS
FSTC/CS
PIT/2A

2(3)HV0299, Quench Tank Inlet from Reactor Head/Pressurizer Vent
(Code/Category 2/B) (1" Globe/Solenoid) Dwg 40111C
BTC/CS
BTO/CS
FSTC/CS
PIT/2A

2(3)HV9201, Regenerative Heat Exchanger E063 to Auxiliary Spray
(Code/Category 1/B) (2" Globe/Motor) Dwg 40123A
BMPO/CS (Note: 19)
BTC/CS
BTO/CS
PIT/2A

2(3)HV9204, RCS Loop 2B Letdown to Regenerative Heat Exchanger
(Code/Category 1/B) (2" Globe/Air) Dwg 40123A
BTC/CS
FSTC/CS
PIT/2A

2(3)HV9217, Reactor Coolant System Bleed Off to Volume Control Tank
(Code/Category 2/A) (3/4" Globe/Motor) Dwg 40124A
AJ/SP
BTC/CS (Note: 3)
BTO/CS
PIT/2A

Inservice Testing Program Valve List

REACTOR COOLANT (Continued)

2(3)HV9218, RCS Bleed Off to VCT Isolation Valve Inside Containment
(Code/Category 2/A) (3/4" Globe/Air) Dwg 40124A
AJ/SP
BTC/CS (Note: 3)
BTO/CS
FSTC/CS
PIT/2A

2(3)PSV0200, Pressurizer Safety Valve
(Code/Category 1/C) (6x8" Safety/Self Actuated) Dwg 40111B
RVT/5S

2(3)PSV0201, Pressurizer Safety Valve
(Code/Category 1/C) (6x8" Safety/Self Actuated) Dwg 40111B
RVT/5S

2(3)PSV9387, Shutdown Cooling Return Flow to Penetration Sump
(Code/Category 2/C) (1x1" Safety/Self Actuated) Dwg 40112D
RVT/10A (Note: 24)

2(3)TV0221, Letdown Isolation Valve
(Code/Category 1/B) (2" Globe/Air) Dwg 40123A
BTC/CS
FSTC/CS
PIT/2A

2(3)XCV9219, Thermal Relief of Regenerative Heat Exchanger
(Code/Category 1/C) (2" Check/Self Actuated) Dwg 40123A
CVTO/CS
BDTC/CS

S2(3)1201MU015 (14-015-C-173), Isolation Vlv Shutdown Cooling to LPSI Pump P015 Suction
(Code/Category 2/B)(14" Gate/Manual) DWG 40112B
PIT/2A

S2(3)1201MU018 (14-018-C-173), Isolation Valve Shutdown Cooling to LPSI Pump P016
(Code/Category 2/B) (14" Gate/Manual) DWG 40112B
PIT/2A

S2(3)1201MU019 (2-019-A-554), Auxiliary Spray Check Valve
(Code/Category 1/C) (2" Check/Self Actuated) Dwg 40123A
CVTC/CS
CVTO/CS

Inservice Testing Program Valve List

REACTOR COOLANT (Continued)

S2(3)1201MU020 (2-020-A-554), Charging Line Check Valve to RCS Loop 2A
(Code/Category 1/C) (2" Check/Self Actuated) Dwg 40123A
CVTC/CS
CVTO/CS

S2(3)1201MU021 (2-021-A-554), Charging Line Check Valve to RCS Loop 1A
(Code/Category 1/C) (2" Check/Self Actuated) Dwg 40123A
CVTC/CS
CVTO/CS

S2(3)1201MU129 (2-129-A-554), Auxiliary Spray to RCS from Charging Pumps
(Code/Category 1/AC) (2" Check/Self Actuated) Dwg 40123A
AJ/SP
CVTC/CS
CVTO/CS

S2(3)1201MU200 (14-200-C-645), Pump P016 Suction Check Valve
(Code/Category 2/C) (14" Check/Self Actuated) Dwg 40112B
CVTC/CS
CVTO/CS

S2(3)1201MU202 (14-202-C-645), Pump P015 Suction Check Valve
(Code/Category 2/C) (14" Check/Self Actuated) Dwg 40112B
CVTC/CS
CVTO/CS

S2(3)1201MU976 (4-976-A-*), Chk Vlv - Pressurizer Spray Line from RCS Loop "1A"
(Code/Category 1/C) (4" Check/Self Actuated) Dwg 40111D
CVTC/CS
BDTO/CS

S2(3)1201MU977 (4-977-A-*), Chk Vlv - Pressurizer Spray Line from RCS Loop "1B"
(Code/Category 1/C) (4" Check/Self Actuated) Dwg 40111D
CVTC/CS
BDTO/CS

Inservice Testing Program Valve List

RESPIRATOR AND SERVICE AIR SYSTEM

2(3)HV5388, Containment Isolation Valve - Instrument Air
(Code/Category 2/A) (1-1/2" Globe/Air) Dwg 40191G
AJ/SP
BTC/CS (Note: 3)
FSTC/CS
PIT/2A

S2(3)2417MU016 (1-1/2-016-C-617), Inst Air Cont Isol Check - Inside Containment
(Code/Category 2/AC) (1-1/2" Check/Self Actuated) Dwg 40191G
AJ/SP
CVTC/RR
BDTO/RR

S2(3)2423MU017 (2-017-C-627), Containment Isolation Valve - Service Air
(Code/Category 2/AC) (2" Check/Self Actuated) Dwg 40191E
AJ/SP
CVTC/RR
BDTO/RR

S22423MU055 (2-055-C-387), Containment Isolation Valve - Service Air
(Code/Category 2/A) (2" Gate/Manual) Dwg 40191C
AJ/SP
PIT/2A

S32423MU055 (2-055-C-145), Containment Isolation Valve - Service Air
(Code/Category 2/A) (2" Globe/Manual) Dwg 40191CS03
AJ/SP
PIT/2A

S22423MU1563 (2-037-C-387), Service Air Inside Containment Isolation Valve
(Code/Category 2/A) (2" Gate/Manual) Dwg 40169C
AJ/SP
PIT/2A

S32423MU1563 (2-037-C-387), Service Air Inside Containment Isolation Valve
(Code/Category 2/A) (2" Globe/Manual) Dwg 40169ES03
AJ/SP
PIT/2A

S22423MU1564 (2-038-C-145), Service Air Outside Containment Isolation Valve
(Code/Category 2/A) (2" Gate/Manual) Dwg 40169E
AJ/SP
PIT/2A

Inservice Testing Program Valve List

RESPIRATOR AND SERVICE AIR SYSTEM (Continued)

S32423MU1564 (2-038-C-387), Service Air Outside Containment Isolation Valve
(Code/Category 2/A) (2" Globe/Manual) Dwg 40169ES03
AJ/SP
PIT/2A

SAFETY INJECTION

2(3)HV0396, Flow Control Valve - LPSI Pumps to Shutdown Cooling System
(Code/Category 2/B) (10" Globe/Motor) Dwg 40112B
BTO/CS
PIT/2A

2(3)HV8152, Isolation Valve - SDCS Heat Exchanger E004 Inlet
(Code/Category 2/B) (12" Gate/Motor) Dwg 40112B
BMPO/CS (Note: 19)
BTC/CS
BTO/CS
PIT/2A

2(3)HV8153, Isolation Valve - SDCS Heat Exchanger E003 Inlet
(Code/Category 2/B) (12" Gate/Motor) Dwg 40112B
BMPO/CS (Note: 19)
BTC/CS
BTO/CS
PIT/2A

2(3)HV8160, Flow Control Valve - SDCS Heat Exchanger Bypass
(Code/Category 2/B) (10" Globe/Motor) Dwg 40112B
BMPC/CS (Note: 19)
BTC/CS
PIT/2A

2(3)HV8161, Block Valve - SDCS Heat Exchanger Bypass to LPSI
(Code/Category 2/B) (14" Gate/Motor) Dwg 40112B
BTC/CS
PIT/2A

2(3)HV8162, LPSI Pump P015 Miniflow Block Valve
(Code/Category 2/A) (3" Gate/Motor) Dwg 40112B
AT/2A
BMPC/QT (Note: 19)
BTC/QT
PIT/2A

Inservice Testing Program Valve List

SAFETY INJECTION (Continued)

2(3)HV8163, LPSI Pump P016 Miniflow Block Valve
(Code/Category 2/A) (3" Gate/Motor) Dwg 40112B
AT/2A
BMPC/QT (Note: 19)
BTC/QT
PIT/2A

2(3)HV9300, East Refueling Water Tank Outlet Valve
(Code/Category 2/B) (24" Gate/Motor) Dwg 40112A
BTC/QT
PIT/2A

2(3)HV9301, West Refueling Water Tank Outlet Valve
(Code/Category 2/B) (24" Gate/Motor) Dwg 40112A
BTC/QT
PIT/2A

2(3)HV9302, Control Valve - Contmt Emergency Sump to Spray Pump P013
(Code/Category 2/B) (24" Butterfly/Motor) Dwg 40112A
BTC/QT
BTO/QT (Note: 3)
PIT/2A

2(3)HV9303, Control Valve - Contmt Emergency Sump to Spray Pump P012
(Code/Category 2/B) (24" Butterfly/Motor) Dwg 40112A
BTC/QT
BTO/QT (Note: 3)
PIT/2A

2(3)HV9304, Control Valve - Containment Emergency Sump Outlet
(Code/Category 2/B) (24" Butterfly/Motor) Dwg 40112A
BTO/QT (Note: 3)
PIT/2A

2(3)HV9305, Control Valve - Containment Emergency Sump Outlet
(Code/Category 2/B) (24" Butterfly/Motor) Dwg 40112A
BTO/QT (Note: 3)
PIT/2A

2(3)HV9306, Isolation Valve - SI Recirculation to RWST T005
(Code/Category 2/A) (3" Gate/Motor) Dwg 40114D
AT/2A
BTC/QT (Note: 3)
PIT/2A

Inservice Testing Program Valve List

SAFETY INJECTION (Continued)

2(3)HV9307, Isolation Valve - SI Recirculation to RWST T005
(Code/Category 2/A) (3" Gate/Motor) Dwg 40114D
AT/2A
BTC/QT (Note: 3)
PIT/2A

2(3)HV9322, Control Valve - LPSI Header to RCS Loop 1A
(Code/Category 2/B) (8" Globe/Motor) Dwg 40112D
BMPO/CS (Note: 19)
BTC/QT
BTO/QT (Note: 3)
PIT/2A

2(3)HV9323, Control Valve - HPSI Header #2 to RCS Loop 1A
(Code/Category 2/B) (2" Globe/Motor) Dwg 40112C
BTC/QT
BTO/QT (Note: 3)
PIT/2A

2(3)HV9324, Control Valve - HPSI Header #1 to RCS Loop 1A
(Code/Category 2/B) (2" Globe/Motor) Dwg 40112C
BTC/QT
BTO/QT (Note: 3)
PIT/2A

2(3)HV9325, Control Valve - LPSI Header to RCS Loop 1B
(Code/Category 2/B) (8" Globe/Motor) Dwg 40112D
BMPO/CS (Note: 19)
BTC/QT
BTO/QT (Note: 3)
PIT/2A

2(3)HV9326, Control Valve - HPSI Header #2 to RCS Loop 1B
(Code/Category 2/B) (2" Globe/Motor) Dwg 40112C
BTC/QT
BTO/QT (Note: 3)
PIT/2A

2(3)HV9327, Control Valve - HPSI Header #1 to RCS Loop 1B
Code/Category 2/B) (2" Globe/Motor) Dwg 40112C
BTC/QT
BTO/QT (Note: 3)
PIT/2A

Inservice Testing Program Valve List

SAFETY INJECTION (Continued)

2(3)HV9328, Control Valve - LPSI Header to RCS Loop 2A
(Code/Category 2/B) (8" Globe/Motor) Dwg 40112D
BMPO/CS (Note: 19)
BTC/QT
BTO/QT (Note: 3)
PIT/2A

2(3)HV9329, Control Valve - HPSI Header #2 to RCS Loop 2A
(Code/Category 2/B) (2" Globe/Motor) Dwg 40112C
BTC/QT
BTO/QT (Note: 3)
PIT/2A

2(3)HV9330, Control Valve - HPSI Header #1 to RCS Loop 2A
(Code/Category 2/B) (2" Globe/Motor) Dwg 40112C
BTC/QT
BTO/QT (Note: 3)
PIT/2A

2(3)HV9331, Control Valve - LPSI Header to RCS Loop 2B
(Code/Category 2/B) (8" Globe/Motor) Dwg 40112D
BMPO/CS (Note: 19)
BTC/QT
BTO/QT (Note: 3)
PIT/2A

2(3)HV9332, Control Valve - HPSI Header #2 to RCS Loop 2B
(Code/Category 2/B) (2" Globe/Motor) Dwg 40112C
BTC/QT
BTO/QT (Note: 3)
PIT/2A

2(3)HV9333, Control Valve - HPSI Header #1 to RCS Loop 2B
(Code/Category 2/B) (2" Globe/Motor) Dwg 40112C
BTC/QT
BTO/QT (Note: 3)
PIT/2A

2(3)HV9334, Containment Isolation - SI Tank Drain Header to RWST T005
(Code/Category 2/A) (2" Globe/Motor) Dwg 40114D
AJ/SP
BTC/QT (Note: 3)
PIT/2A

Inservice Testing Program Valve List

SAFETY INJECTION (Continued)

2(3)HV9336, Isolation Valve - SDCS to LPSI Pump Suction
(Code/Category 2/B) (16" Gate/Motor) Dwg 40112D
BMPO/CS (Note: 19)
BTC/QT
BTO/QT
PIT/2A

2(3)HV9337, Isolation Valve - SDCS to LPSI Pump Suction
(Code/Category 1/A) (16" Gate/Motor) Dwg 40112D
AT/2A (Note: 13)
BTC/CS
BTO/CS
PIT/2A

2(3)HV9339, Isolation Valve - SDCS from RCS Loop 2
(Code/Category 1/A) (16" Gate/Motor) Dwg 40112D
AT/2A (Note: 13)
BTC/CS
BTO/CS
PIT/2A

2(3)HV9340, Safety Injection Tank T008 Outlet Valve to RCS Loop 1A
(Code/Category 1/B) (8" Gate/Motor) Dwg 40113A
BTC/CS
BTO/CS
PIT/2A

2(3)HV9341, Safety Injection Tank T008 Drain Isolation Valve
(Code/Category 1/A) (1" Globe/Air) Dwg 40113A
AT/2A
BTC/QT (Note: 3)
FSTC/QT
PIT/2A

2(3)HV9345, Safety Injection Tank T008 Vent Valve
(Code/Category 2/B) (1" Globe/Solenoid) Dwg 40113A
BTO/CS
PIT/2A

2(3)HV9347, Safety Injection Recirc Return to RWST T005 Isolation Valve
(Code/Category 2/A) (3" Gate/Motor) Dwg 40114D
AT/2A
BTC/QT (Note: 3)
PIT/2A

Inservice Testing Program Valve List

SAFETY INJECTION (Continued)

2(3)HV9348, Safety Injection Recirc Return to RWST T005 Isolation Valve
(Code/Category 2/A) (3" Gate/Motor) Dwg 40114D
AT/2A
BTC/QT (Note: 3)
PIT/2A

2(3)HV9350, Safety Injection Tank T007 Outlet Valve to RCS Loop 1B
(Code/Category 1/B) (8" Gate/Motor) Dwg 40113A
BTC/CS
BTO/CS
PIT/2A

2(3)HV9351, Safety Injection Tank T007 Drain Isolation Valve
(Code/Category 1/A) (1" Globe/Air) Dwg 40113A
AT/2A
BTC/QT (Note: 3)
FSTC/QT
PIT/2A

2(3)HV9353, Shutdown Cooling Warm-Up Valve
(Code/Category 2/B) (6" Gate/Motor) Dwg 40112D
BTO/CS
PIT/2A

2(3)HV9355, Safety Injection Tank T007 Vent Valve
(Code/Category 2/B) (1" Globe/Solenoid) Dwg 40113A
BTO/CS
PIT/2A

2(3)HV9359, Shutdown Cooling Warm-Up Valve
(Code/Category 2/B) (6" Gate/Motor) Dwg 40112D
BTO/CS
PIT/2A

2(3)HV9360, Safety Injection Tank T009 Outlet Valve to RCS Loop 2A
(Code/Category 1/B) (8" Gate/Motor) Dwg 40113B
BTC/CS
BTO/CS
PIT/2A

2(3)HV9361, Safety Injection Tank T009 Drain Isolation Valve
(Code/Category 1/A) (1" Globe/Air) Dwg 40113B
AT/2A
BTC/QT (Note: 3)
FSTC/QT
PIT/2A

Inservice Testing Program Valve List

SAFETY INJECTION (Continued)

2(3)HV9365, Safety Injection Tank T009 Vent Valve
(Code/Category 2/B) (1" Globe/Solenoid) Dwg 40113B
BTO/CS
PIT/2A

2(3)HV9370, Safety Injection Tank T010 Outlet Valve to RCS Loop 2B
(Code/Category 1/B) (8" Gate/Motor) Dwg 40113B
BTC/CS
BTO/CS
PIT/2A

2(3)HV9371, Safety Injection Tank T010 Drain Isolation Valve
(Code/Category 1/A) (1" Globe/Air) Dwg 40113B
AT/2A
BTC/QT (Note: 3)
FSTC/QT
PIT/2A

2(3)HV9375, Safety Injection Tank T010 Vent Valve
(Code/Category 2/B) (1" Globe/Solenoid) Dwg 40113B
BTO/CS
PIT/2A

2(3)HV9377, SDCS Bypass to LPSI Suction Isolation Valve
(Code/Category 1/A) (8" Gate/Motor) Dwg 40112D
AT/2A (Note: 13)
BTC/CS
BTO/CS
PIT/2A

2(3)HV9378, SDCS Bypass to LPSI Suction Isolation Valve
(Code/Category 1/A) (8" Gate/Motor) Dwg 40112D
AT/2A (Note: 13)
BTC/CS
BTO/CS
PIT/2A

2(3)HV9379, SDCS Bypass to LPSI Suction Isolation Valve - Seal
(Code/Category 2/B) (8" Gate/Motor) Dwg 40112D
BMPO/CS (Note: 19)
BTC/QT
BTO/QT
PIT/2A

Inservice Testing Program Valve List

SAFETY INJECTION (Continued)

2(3)HV9420, Control Valve - HPSI Header #1 to RCS Loop 2 Hot Leg
(Code/Category 2/A) (3" Globe/Motor) Dwg 40112C
AJ/SP
BTO/CS
PIT/2A

2(3)HV9433, Reactor Coolant Loop 1B Hot Leg Injection Drain Valve
(Code/Category 1/A) (1" Globe/Air) Dwg 40112C
AT/2A
BTC/QT (Note: 3)
FSTC/QT
PIT/2A

2(3)HV9434, Control Valve - HPSI Header #2 to RCS Loop 1 Hot Leg
(Code/Category 2/A) (3" Globe/Motor) Dwg 40112C
AJ/SP
BTO/CS
PIT/2A

2(3)HV9437, Reactor Coolant Loop 1A Hot Leg Injection Drain Valve
(Code/Category 1/A) (1" Globe/Air) Dwg 40112C
AT/2A
BTC/QT (Note: 3)
FSTC/QT
PIT/2A

2(3)PSV8154, HPSI Pump P019 Suction
(Code/Category 2/C) (1/2"x1/2" Safety/Self Actuated) Dwg 40112A
RVT/10S

2(3)PSV8155, HPSI Pump P017 Suction
(Code/Category 2/C) (1/2"x1/2" Safety/Self Actuated) Dwg 40112A
RVT/10S

2(3)PSV8156, HPSI Pump P018 Suction
(Code/Category 2/C) (1/2"x1/2" Safety/Self Actuated) Dwg 40112A
RVT/10S

2(3)PSV8157, CSS Pump P013 Suction
(Code/Category 2/C) (3/4"x1" Safety/Self Actuated) Dwg 40114A
RVT/10S

2(3)PSV8158, CSS Pump P012 Suction
(Code/Category 2/C) (3/4"x1" Safety/Self Actuated) Dwg 40114A
RVT/10S

Inservice Testing Program Valve List

SAFETY INJECTION (Continued)

2(3)PSV9318, LPSI Header
(Code/Category 2/C) (1"x1" Safety/Self Actuated) Dwg 40112D
RVT/10A

2(3)PSV9319, HPSI Pumps to HPSI Hdr #2
(Code/Category 2/C) (1"x1" Safety/Self Actuated) Dwg 40112A
RVT/10A

2(3)PSV9320, HPSI Hdr #1
(Code/Category 2/C) (1"x1" Safety/Self Actuated) Dwg 40112C
RVT/10A

2(3)PSV9321, HPSI Hdr #2 To Penetration Sump Pressure Safety/Relief
(Code/Category 2/C) (1.5x2.5" Safety/Self Actuated) Dwg 40112C
RVT/10A (Note: 24)

2(3)PSV9338, Shutdown Cooling Return from Reactor Coolant Loop No. 2
(Code/Category 1/C) (3/4x1" Safety/Self Actuated) Dwg 40112D
RVT/5A

2(3)PSV9346, Safety Injection Tank T008 Vent
(Code/Category 2/C) (1x0.75" Safety/Self Actuated) Dwg 40113A
RVT/10A (Note: 24)

2(3)PSV9349, Shutdown Cooling Inside CNTMNT Pressure Relief (LTOP)
(Code/Category 2/C) (6x8" Safety/Self Actuated) Dwg 40112D
RVT/RR (Note: 15)

2(3)PSV9356, Safety Injection Tank T007 Vent
(Code/Category 2/C) (1x0.75" Safety/Self Actuated) Dwg 40113A
RVT/10A (Note: 24)

2(3)PSV9363, Shutdown Cooling Return from Reactor Coolant Loop No. 2
(Code/Category 1/C) (3/4x1" Safety/Self Actuated) Dwg 40112D
RVT/5A

2(3)PSV9366, Safety Injection Tank T009 Vent
(Code/Category 2/C) (1x0.75" Safety/Self Actuated) Dwg 40113B
RVT/10A (Note: 24)

2(3)PSV9376, Safety Injection Tank T010 Vent
(Code/Category 2/C) (1x0.75" Safety/Self Actuated) Dwg 40113B
RVT/10A (Note: 24)

Inservice Testing Program Valve List

SAFETY INJECTION (Continued)

2(3)PSV9388, Safety Injection Tanks to RC Drain Tank
(Code/Category 2/C) (3/4x1" Safety/Self Actuated) Dwg 40113A
RVT/10S

S2(3)1204MR433 (V-433), LPSI 016 Casing Vent
(Code/Category 2/B) (1/2" Globe/Manual) Dwg 40112B
BMO/2A
BMC/2A

S2(3)1204MR453, LPSI P015 Casing Vent
(Code/Category 2/B) (3/8" Globe/Manual) Dwg 40112B
BMO/2A
BMC/2A

S2(3)1204MU001 (24-001-C-724), RWST T005 to Spray Pump P012 Suction Header
(Code/Category 2/C) (24" Split Disc Check/Self Actuated) Dwg 40112A
CVPO/QT
CVTC/RR
CVTO/RR (Note: 18)

S2(3)1204MU002 (24-002-C-724), RWST T006 to Spray Pump P013 Suction Header
(Code/Category 2/C) (24" Split Disc Check/Self Actuated) Dwg 40112A
CVPO/QT
CVTC/RR
CVTO/RR (Note: 18)

S2(3)1204MU003 (24-003-C-724), Outlet Chk Vle - Containment Emergency Sump
(Code/Category 2/C) (24" Split Disc Check/Self Actuated) Dwg 40112A
CVPO/RR
CVTO/RR (Note: 18)
BDTC/RR

S2(3)1204MU004 (24-004-C-724), Outlet Chk Vlv - Containment Emergency Sump
(Code/Category 2/C) (24" Split Disc Check/Self Actuated) Dwg 40112A
CVPO/RR
CVTO/RR (Note: 18)
BDTC/RR

S2(3)1204MU006 (10-006-C-675), HPSI Pumps P017 and P018 Suction Chk Vlv
(Code/Category 2/C) (10" Check/Self Actuated) Dwg 40112A
CVPO/QT
CVTO/RR
BDTC/RR

Inservice Testing Program Valve List

SAFETY INJECTION (Continued)

S2(3)1204MU008 (10-008-C-675), HPSI Pumps P018 and P019 Suction Chk Vlv
(Code/Category 2/C) (10" Check/Self Actuated) Dwg 40112A
CVPO/QT
CVTO/RR
BDTC/RR

S2(3)1204MU012 (4-012-C-358), HPSI Pump P017 Discharge Check Valve
(Code/Category 2/C) (4" Stop Check/Self Actuated) Dwg 40112A
CVTC/CS
CVTO/CS

S2(3)1204MU013 (4-013-C-375), MP018 to #1 HPSI Hdr Isolation
(Code/Category 2/A) (4" Gate/Manual) Dwg 40112A
AT/2A

S2(3)1204MU014 (4-014-C-375), MP018 to #2 HPSI Hdr Isolation
(Code/Category 2/A) (4" Gate/Manual) Dwg 40112A
AT/2A

S2(3)1204MU015 (4-015-C-358), HPSI Pump P019 Discharge Check Valve
(Code/Category 2/C) (4" Stop Check/Self Actuated) Dwg 40112A
CVTC/CS
CVTO/CS

S2(3)1204MU016 (4-016-C-358), HPSI Pump P018 Discharge Check Valve
(Code/Category 2/C) (4" Stop Check/Self Actuated) Dwg 40112A
CVTC/CS
CVTO/CS

S2(3)1204MU017 (4-017-C-553), HPSI P018 and P019 to #2 High Pressure Header
(Code/Category 2/C) (4" Check/Self Actuated) Dwg 40112A
CVTC/CS
CVTO/CS

S2(3)1204MU018 (3-018-A-551), HPSI Combined Hdr to RCS Loop 1A Check Valve
(Code/Category 1/AC) (3" Check/Self Actuated) Dwg 40112C
AT/2A (Note: 13)
CVTC/CS
CVTO/CS

S2(3)1204MU019 (3-019-A-551), HPSI Combined Hdr to RCS Loop 1B Check Valve
(Code/Category 1/AC) (3" Check/Self Actuated) Dwg 40112C
AT/2A (Note: 13)
CVTC/CS
CVTO/CS

Inservice Testing Program Valve List

SAFETY INJECTION (Continued)

S2(3)1204MU020 (3-020-A-551), HPSI Combined Hdr to RCS Loop 2A Check Valve (Code/Category 1/AC) (3" Check/Self Actuated) Dwg 40112C
AT/2A (Note: 13)
CVTC/CS
CVTO/CS

S2(3)1204MU021 (3-021-A-551), HPSI Combined Hdr to RCS Loop 2B Check Valve (Code/Category 1/AC) (3" Check/Self Actuated) Dwg 40112C
AT/2A (Note: 13)
CVTC/CS
CVTO/CS

S2(3)1204MU022 (16-022-C-173), Isolation Vlv, TK005 to LPSI Pump P015 Suction (Code/Category 2/B) (16" Gate/Manual) Dwg 40112B
PIT/2A

S2(3)1204MU023 (16-023-C-173), Isolation Vlv, TK006 to LPSI Pump P016 Suction (Code/Category 2/B) (16" Gate/Manual) Dwg 40112B
PIT/2A

S2(3)1204MU024 (10-024-C-406), LPSI Pump P015 Discharge Stop Check Valve (Code/Category 2/C) (10" Stop Check/Self Actuated) Dwg 40112B
CVTC/CS
CVTO/CS

S2(3)1204MU025 (10-025-C-406), LPSI Pump P016 Discharge Stop Check Valve (Code/Category 2/C) (10" Stop Check/Self Actuated) Dwg 40112B
CVTC/CS
CVTO/CS

S2(3)1204MU027 (12-027-A-551), Safety Injection Headers to RCS Loop 1A (Code/Category 1/AC) (12" Check/Self Actuated) Dwg 40113A
AT/2A (Note: 13)
CVTC/RR
CVTO/RR

S2(3)1204MU029 (12-029-A-551), Safety Injection Headers to RCS Loop 1B (Code/Category 1/AC) (12" Check/Self Actuated) Dwg 40113A
AT/2A (Note: 13)
CVTC/RR
CVTO/RR

Inservice Testing Program Valve List

SAFETY INJECTION (Continued)

S2(3)1204MU031 (12-031-A-551), Safety Injection Hdrs to RCS Loop 2A
(Code/Category 1/AC) (12" Check/Self Actuated) Dwg 40113B
AT/2A (Note: 13)
CVTC/RR
CVTO/RR

S2(3)1204MU033 (12-033-A-551), Safety Injection Hdrs to RCS Loop 2B
(Code/Category 1/AC) (12" Check/Self Actuated) Dwg 40113B
AT/2A (Note: 13)
CVTC/RR
CVTO/RR

S2(3)1204MU034 (2-034-C-329), HPSI P017 Miniflow
(Code/Category 2/AC) (2" Stop Check/Self Actuated) Dwg 40112A
AT/2A
CVTC/RR
CVTO/RR

S2(3)1204MU035 (2-035-C-329), HPSI P019 Miniflow
(Code/Category 2/AC) (2" Stop Check/Self Actuated) Dwg 40112A
AT/2A
CVTC/RR
CVTO/RR

S2(3)1204MU036 (2-036-C-329), HPSI P018 Train "A" Miniflow
(Code/Category 2/AC) (2" Stop Check/Self Actuated) Dwg 40112A
AT/2A
CVTC/RR
CVTO/RR

S2(3)1204MU037 (2-037-C-329), LPSI Pump P015 Miniflow Stop Check Valve
(Code/Category 2/C) (2" Stop Check/Self Actuated) Dwg 40112B
CVTC/RR
CVTO/RR

S2(3)1204MU040 (12-040-A-551), Safety Injection Tank T008 Outlet Check Valve
(Code/Category 1/AC) (12" Check/Self Actuated) Dwg 40113A
AT/2A (Note: 13)
CVTC/RR
CVTO/RR (Note: 18)

S2(3)1204MU041 (12-041-A-551), Safety Injection Tank T007 Outlet Check Valve
(Code/Category 1/AC) (12" Check/Self Actuated) Dwg 40113A
AT/2A (Note: 13)
CVTC/RR
CVTO/RR (Note: 18)

Inservice Testing Program Valve List

SAFETY INJECTION (Continued)

S2(3)1204MU042 (12-042-A-551), Safety Injection Tank T009 Outlet Check Valve (Code/Category 1/AC) (12" Check/Self Actuated) Dwg 40113B
AT/2A (Note: 13)
CVTC/RR
CVTO/RR (Note: 18)

S2(3)1204MU043 (12-043-A-551), Safety Injection Tank T010 Outlet Check Valve (Code/Category 1/AC) (12" Check/Self Actuated) Dwg 40113B
AT/2A (Note: 13)
CVTC/RR
CVTO/RR (Note: 18)

S2(3)1204MU063 (2-063-C-329), LPSI Pump P016 Miniflow Stop Check Valve (Code/Category 2/C) (2" Stop Check/Self Actuated) Dwg 40112B
CVTC/RR
CVTO/RR

S2(3)1204MU072 (8-072-A-552), LPSI Check Valve to RCS Loop 1A (Code/Category 1/AC) (8" Check/Self Actuated) Dwg 40112D
AT/2A (Note: 13)
CVTC/CS
CVTO/CS

S2(3)1204MU073 (8-073-A-552), LPSI Check Valve to RCS Loop 1B (Code/Category 1/AC) (8" Check/Self Actuated) Dwg 40112D
AT/2A (Note: 13)
CVTC/CS
CVTO/CS

S2(3)1204MU074 (8-074-A-552), LPSI Check Valve to RCS Loop 2A (Code/Category 1/AC) (8" Check/Self Actuated) Dwg 40112D
AT/2A (Note: 13)
CVTC/CS
CVTO/CS

S2(3)1204MU075 (8-075-A-552), LPSI Check Valve to RCS Loop 2B (Code/Category 1/AC) (8" Check/Self Actuated) Dwg 40112D
AT/2A (Note: 13)
CVTC/CS
CVTO/CS

S2(3)1204MU077 (16-077-C-645), LPSI Pump P016 Suction Header Check Valve (Code/Category 2/C) (16" Check/Self Actuated) Dwg 40112A
CVPO/QT
CVTC/RR (Note: 16)
CVTO/RR

Inservice Testing Program Valve List

SAFETY INJECTION (Continued)

S2(3)1204MU084 (16-084-C-645), LPSI Pump P015 Suction Check Valve
(Code/Category 2/C) (16" Check/Self Actuated) Dwg 40112A
CVPO/QT
CVTC/RR (Note: 16)
CVTO/RR

S2(3)1204MU087 (16-087-C-675), Spray Pump P013 Suction Check Valve
(Code/Category 2/C) (16" Check/Self Actuated) Dwg 40114A
CVTO/CS
BDTC/CS

S2(3)1204MU088 (16-088-C-675), Spray Pump P012 Suction Check Valve
(Code/Category 2/C) (16" Check/Self Actuated) Dwg 40114A
CVTO/CS
BDTC/CS

S2(3)1204MU099 (2-099-C-334), Cont. Isolation, SI Tk Drain Hdr to RWST T005
(Code/Category 2/A) (2" Globe/Manual) Dwg 40114D
AJ/SP
PIT/2A

S2(3)1204MU104 (2-104-C-329), HPSI P018 Train "B" Miniflow
(Code/Category 2/AC) (2" Stop Check/Self Actuated) Dwg 40112A
AT/2A
CVTC/RR
CVTO/RR

S2(3)1204MU152 (3-152-A-551), HPSI Header #2 to Reactor Coolant System Loop 1 Hot Leg
(Code/Category 1/AC) (3" Check/Self Actuated) Dwg 40111A
AT/2A (Note: 13)
CVTC/CS
CVTO/CS

S2(3)1204MU154 (2-154-C-036), CVCS to RCS Loop 2 Hot Leg Injection
(Code/Category 2/B) (2" Gate/Manual) Dwg 40112C
BMO/2A

S2(3)1204MU155 (3-155-C-551), HPSI Header #1 to RCS Loop 2 Hot Leg
(Code/Category 2/C) (3" Check/Self Actuated) Dwg 40112C
CVTC/CS
CVTO/CS

Inservice Testing Program Valve List

SAFETY INJECTION (Continued)

S2(3)1204MU156 (3-156-A-551), HPSI Hdr #1 to RCS Loop 2 Hot Leg Inlet Check Valve
(Code/Category 1/AC) (3" Check/Self Actuated) Dwg 40112D
AT/2A (Note: 13)
CVTC/CS
CVTO/CS

S2(3)1204MU157 (3-157-A-550), HPSI Header #2 to RCS Loop 1 Hot Leg
(Code/Category 1/AC) (3" Check/Self Actuated) Dwg 40112C
AJ/SP
AT/2A (Note: 13)
CVTC/CS
CVTO/CS

S2(3)1204MU158 (3-158-A-550), HPSI Header #1 to RCS Loop 2 Hot Leg
(Code/Category 1/AC) (3" Check/Self Actuated) Dwg 40112C
AJ/SP
AT/2A (Note: 13)
CVTC/CS
CVTO/CS

S21204MU195 (1-195-C-657), Check Valve Nitrogen Supply To SIT T008
(Code/Category 2/C) (3/4" Check/Self Actuated) Dwg 40113A
CVTC/CS
BDTO/CS

S31204MU195 (1-195-C-639), Check Valve Nitrogen Supply To SIT T008
(Code/Category 2/C) (1" Check/Self Actuated) Dwg 40113AS03
CVTC/CS
BDTO/CS

S2(3)1204MU196 (1-196-C-657), Check Valve Nitrogen Supply To SIT T007
(Code/Category 2/C) (3/4" Check/Self Actuated) Dwg 40113A
CVTC/CS
BDTO/CS

S2(3)1204MU197 (1-197-C-657), Check Valve Nitrogen Supply To SIT T009
(Code/Category 2/C) (3/4" Check/Self Actuated) Dwg 40113B
CVTC/CS
BDTO/CS

S21204MU198 (1-198-C-657), Check Valve Nitrogen Supply To SIT T010
(Code/Category 2/C) (3/4" Check/Self Actuated) Dwg 40113B
CVTC/CS
BDTO/CS

Inservice Testing Program Valve List

SAFETY INJECTION (Continued)

S31204MU198 (1-198-C-639), Check Valve Nitrogen Supply To SIT T010
(Code/Category 2/C) (1" Check/Self Actuated) Dwg 40113BS03
CVTC/CS
BDTO/CS

S2(3)1204MU199 (16-199-C-645), LPSI Pump P016 Suction Header Check Valve
(Code/Category 2/C) (16" Check/Self Actuated) Dwg 40112A
CVPO/QT
CVTC/RR (Note: 16)
CVTO/RR

S2(3)1204MU201 (16-201-C-645), LPSI Pump P015 Suction Header Check Valve
(Code/Category 2/C) (16" Check/Self Actuated) Dwg 40112A
CVPO/QT
CVTC/RR (Note: 16)
CVTO/RR

SALT WATER COOLING

2(3)HV6200, Salt Water Cooling System Pump P112 Discharge Valve
(Code/Category 3/B) (30" Butterfly/Air) Dwg 40126A
BTO/QT (Note: 3)
FSTO/QT
PIT/2A

2(3)HV6201, Salt Water Cooling System Pump P113 Discharge Valve
(Code/Category 3/B) (30" Butterfly/Air) Dwg 40126A
BTO/QT (Note: 3)
FSTO/QT
PIT/2A

2(3)HV6202, Salt Water Cooling System Pump P307 Discharge Valve
(Code/Category 3/B) (30" Butterfly/Air) Dwg 40126B
BTO/QT (Note: 3)
FSTO/QT
PIT/2A

2(3)HV6203, Salt Water Cooling System Pump P114 Discharge Valve
(Code/Category 3/B) (30" Butterfly/Air) Dwg 40126B
BTO/QT (Note: 3)
FSTO/QT
PIT/2A

Inservice Testing Program Valve List

SALT WATER COOLING (Continued)

2(3)HV6376, Service Water to SWC Pump P112A Control Valve
(Code/Category 3/B) (1" Globe/Air) Dwg 40126A
BTO/QT
FSTO/QT
PIT/2A

2(3)HV6377, Service Water to SWC Pump P113B Control Valve
(Code/Category 3/B) (1" Globe/Air) Dwg 40126A
BTO/QT
FSTO/QT
PIT/2A

2(3)HV6378, Service Water to SWC Pump P307A Control Valve
(Code/Category 3/B) (1" Globe/Air) Dwg 40126B
BTO/QT
FSTO/QT
PIT/2A

2(3)HV6379, Service Water to SWC Pump P114B Control Valve
(Code/Category 3/B) (1" Globe/Air) Dwg 40126B
BTO/QT
FSTO/QT
PIT/2A

2(3)HV6495, Salt Water from CCW Heat Exchanger E002B
(Code/Category 3/B) (30" Butterfly/Motor) Dwg 40127C
BTO/QT
PIT/2A

2(3)HV6497, Salt Water from CCW Heat Exchanger E001A
(Code/Category 3/B) (30" Butterfly/Motor) Dwg 40127C
BTO/QT
PIT/2A

2(3)PSV6206, CCW Heat Exchanger E001 Saltwater Inlet Safety/Relief
(Code/Category 3/C) (2x2 Safety/Self Actuated) Dwg 40127C
RVT/10A (Note: 24)

2(3)PSV6486, CCW Heat Exchanger E002 Saltwater Inlet Safety/Relief
(Code/Category 3/C) (2x2 Safety/Self Actuated) Dwg 40127C
RVT/10A (Note: 24)

S2(3)1413MU009 (30-009-D-722), SWCS Pump P112 Discharge Check Valve
(Code/Category 3/C) (30" Split Disc Check/Self Actuated) Dwg 40126A
CVTC/QT
CVTO/QT

Inservice Testing Program Valve List

SALT WATER COOLING (Continued)

S2(3)1413MU010 (30-010-D-722), SWCS Pump P113 Discharge Check Valve (Code/Category 3/C) (30" Split Disc Check/Self Actuated) Dwg 40126A
CVTC/QT
CVTO/QT

S2(3)1413MU011 (30-011-D-722), SWCS Pump P307 Discharge Check Valve (Code/Category 3/C) (30" Split Disc Check/Self Actuated) Dwg 40126B
CVTC/QT
CVTO/QT

S2(3)1413MU012 (30-012-D-722), SWCS Pump P114 Discharge Check Valve (Code/Category 3/C) (30" Split Disc Check/Self Actuated) Dwg 40126B
CVTC/QT
CVTO/QT

S2(3)1413MU013 (1-013-D-691), SWCS Pump P112 Recirc to Cyclone Separator (Code/Category 3/C) (1" Check/Self Actuated) Dwg 40126A
CVTO/QT
BDTC/QT

S2(3)1413MU016 (1-016-D-691), SWCS Pump P113 Recirc to Cyclone Separator (Code/Category 3/C) (1" Check/Self Actuated) Dwg 40126A
CVTO/QT
BDTC/QT

S2(3)1413MU021 (1-021-D-691), SWCS Pump P307 Recirc to Cyclone Separator (Code/Category 3/C) (1" Check/Self Actuated) Dwg 40126B
CVTO/QT
BDTC/QT

S2(3)1413MU024 (1-024-D-691), SWCS Pump P114 Recirc to Cyclone Separator (Code/Category 3/C) (1" Check/Self Actuated) Dwg 40126B
CVTO/QT
BDTC/QT

S2(3)1413MU047 (1-047-D-691), Chk Vlv Service Water to Salt Water Pump P112 (Code/Category 3/C) (1" Check/Self Actuated) Dwg 40126A
CVTC/QT
BDTO/QT

S2(3)1413MU048 (1-048-D-691), Chk Vlv Service Water to Salt Wtr Pump P113 (Code/Category 3/C) (1" Check/Self Actuated) Dwg 40126A
CVTC/QT
BDTO/QT

Inservice Testing Program Valve List

SALT WATER COOLING (Continued)

S2(3)1413MU049 (1-049-D-691), Chk Vlv Service Water to Salt Wtr Pump P307
(Code/Category 3/C) (1" Check/Self Actuated) Dwg 40126B
CVTC/QT
BDTO/QT

S2(3)1413MU050 (1-050-D-691), Chk Vlv Service Water to Salt Wtr Pump P114
(Code/Category 3/C) (1" Check/Self Actuated) Dwg 40126B
CVTC/QT
BDTO/QT

S2(3)1413MW458 (1-458-D-691), Vent Float Vlv to Atmos- P112 Salt Water Pump
(Code/Category NA/C) (6" Check/Self Actuated) Dwg 40126A
CVTC/QT (Notes: 6, 20)
BDTO/QT

S2(3)1413MW459 (1-459-D-691), Vent Float Vlv to Atmos - P113 Salt Water Pump
(Code/Category NA/C) (6" Check/Self Actuated) Dwg 40126A
CVTC/QT (Notes: 6, 20)
BDTO/QT

S2(3)1413MW460 (1-460-D-691), Vent Float Vlv to Atmos - P307 Salt Water Pump
(Code/Category NA/C) (6" Check/Self Actuated) Dwg 40126B
CVTC/QT (Notes: 6, 20)
BDTO/QT

S2(3)1413MW461 (1-461-D-691), Vent Float Vlv to Atmos - P114 Salt Water Pump
(Code/Category NA/C) (6" Check/Self Actuated) Dwg 40126B
CVTC/QT (Notes: 6, 20)
BDTO/QT

STEAM

2(3)HV4053, Blowdown Isolation Valve - Steam Generator E089
(Code/Category 2/B) (6" Globe/Air) Dwg 40141A
BTC/QT (Note: 3)
FSTC/QT
PIT/2A

2(3)HV4054, Blowdown Isolation Valve - Steam Generator E088
(Code/Category 2/B) (6" Globe/Air) Dwg 40141A
BTC/QT (Note: 3)
FSTC/QT
PIT/2A

Inservice Testing Program Valve List

STEAM (Continued)

2(3)HV4057, Sample Isolation Valve - Steam Generator E089
(Code/Category 2/B) (1" Globe/Air) Dwg 40141A
BTC/QT (Note: 3)
FSTC/QT
PIT/2A

2(3)HV4058, Sample Isolation Valve - Steam Generator E088
(Code/Category 2/B) (1" Globe/Air) Dwg 40141A
BTC/QT (Note: 3)
FSTC/QT
PIT/2A

2(3)HV8200, Steam from Steam Generator E089 to AFW Pump P140
(Code/Category 2/B) (4" Globe/Air) Dwg 40141C
BMPC/CS (Note: 19)
BTC/QT
BTO/QT (Note: 3)
FSTO/QT
PIT/2A

2(3)HV8201, Steam from Steam Generator E088 to AFW Pump P140
(Code/Category 2/B) (4" Globe/Air) Dwg 40141D
BMPC/CS (Note: 19)
BTC/QT
BTO/QT (Note: 3)
FSTO/QT
PIT/2A

2(3)HV8202, Steam Generator E089 Main Steam Isolation Valve Bypass
(Code/Category 2/B) (4" Globe/Air) Dwg 40141E
BTC/QT (Note: 3)
FSTC/QT
PIT/2A

2(3)HV8203, Steam Generator E088 Main Steam Isolation Valve Bypass
(Code/Category 2/B) (4" Globe/Air) Dwg 40141D
BTC/QT (Note: 3)
FSTC/QT
PIT/2A

2(3)HV8204, Steam Generator E089 Main Steam Isolation Valve
(Code/Category 2/B) (30" Gate/Hydraulic) Dwg 40141C
BTC/CS (Note: 3)
FSTC/CS
PIT/2A

Inservice Testing Program Valve List

STEAM (Continued)

2(3)HV8205, Steam Generator E088 Main Steam Isolation Valve
(Code/Category 2/B) (30" Gate/Hydraulic) Dwg 40141D
BTC/CS (Note: 3)
FSTC/CS
PIT/2A

2(3)HV8419, Main Steam Dump to Atmosphere
(Code/Category 2/B) (8" Angle/Air) Dwg 40141D
BMC/RR
BMO/RR
BTC/CS (Note: 3)
BTO/CS
BTPO/QT
FSTC/CS
PIT/2A

2(3)HV8421, Main Steam Dump to Atmosphere
(Code/Category 2/B) (8" Angle/Air) Dwg 40141C
BMC/RR
BMO/RR
BTC/CS (Note: 3)
BTO/CS
BTPO/QT
FSTC/CS
PIT/2A

2(3)HY8419B, Main Steam Dump to Atmosphere Solenoid Valve
(Code/Category 2/A) (3/4" 3-Way/Solenoid) Dwg 40141D
AT/2A

2(3)HY8419C, Main Steam Dump to Atmosphere Solenoid Valve
(Code/Category 2/A) (3/4" 3-Way/Solenoid) Dwg 40141D
AT/2A

2(3)HY8419D, Main Steam Dump to Atmosphere Solenoid Valve
(Code/Category 2/A) (3/4" 3-Way/Solenoid) Dwg 40141D
AT/2A

2(3)HY8421B, Main Steam Dump to Atmosphere Solenoid Valve
(Code/Category 2/A) (3/4" 3-Way/Solenoid) Dwg 40141C
AT/2A

2(3)HY8421C, Main Steam Dump to Atmosphere Solenoid Valve
(Code/Category 2/A) (3/4" 3-Way/Solenoid) Dwg 40141C
AT/2A

Inservice Testing Program Valve List

STEAM (Continued)

2(3)HY8421D, Main Steam Dump to Atmosphere Solenoid Valve
(Code/Category 2/A) (3/4" 3-Way/Solenoid) Dwg 40141C
AT/2A

2(3)PCV8463, Nitrogen Supply to Main Steam Dump Valve HV8419
(Code/Category NA/B) (1/4" Gate/Air) Dwg 40141D
BTO/CS (Note: 20)

2(3)PCV8465, Nitrogen Supply to Main Steam Dump Valve HV8421
(Code/Category NA/B) (1/4" Gate/Air) Dwg 40141C
BTO/CS (Note: 20)

2(3)PSV8401, Main Steam Relief Valve
(Code/Category 2/C) (6x10" Safety/Self Actuated) Dwg 40141D
RVT/4S

2(3)PSV8402, Main Steam Relief Valve
(Code/Category 2/C) (6x10" Safety/Self Actuated) Dwg 40141D
RVT/4S

2(3)PSV8403, Main Steam Relief Valve
(Code/Category 2/C) (6x10" Safety/Self Actuated) Dwg 40141D
RVT/4S

2(3)PSV8404, Main Steam Relief Valve
(Code/Category 2/C) (6x10" Safety/Self Actuated) Dwg 40141D
RVT/4S

2(3)PSV8405, Main Steam Relief Valve
(Code/Category 2/C) (6x10" Safety/Self Actuated) Dwg 40141D
RVT/4S

2(3)PSV8406, Main Steam Relief Valve
(Code/Category 2/C) (6x10" Safety/Self Actuated) Dwg 40141D
RVT/4S

2(3)PSV8407, Main Steam Relief Valve
(Code/Category 2/C) (6x10" Safety/Self Actuated) Dwg 40141D
RVT/4S

2(3)PSV8408, Main Steam Relief Valve
(Code/Category 2/C) (6x10" Safety/Self Actuated) Dwg 40141D
RVT/4S

Inservice Testing Program Valve List

STEAM (Continued)

2(3)PSV8409, Main Steam Relief Valve
(Code/Category 2/C) (6x10" Safety/Self Actuated) Dwg 40141D
RVT/4S

2(3)PSV8410, Main Steam Relief Valve
(Code/Category 2/C) (6x10" Safety/Self Actuated) Dwg 40141C
RVT/4S

2(3)PSV8411, Main Steam Relief Valve
(Code/Category 2/C) (6x10" Safety/Self Actuated) Dwg 40141C
RVT/4S

2(3)PSV8412, Main Steam Relief Valve
(Code/Category 2/C) (6x10" Safety/Self Actuated) Dwg 40141C
RVT/4S

2(3)PSV8413, Main Steam Relief Valve
(Code/Category 2/C) (6x10" Safety/Self Actuated) Dwg 40141C
RVT/4S

2(3)PSV8414, Main Steam Relief Valve
(Code/Category 2/C) (6x10" Safety/Self Actuated) Dwg 40141C
RVT/4S

2(3)PSV8415, Main Steam Relief Valve
(Code/Category 2/C) (6x10" Safety/Self Actuated) Dwg 40141C
RVT/4S

2(3)PSV8416, Main Steam Relief Valve
(Code/Category 2/C) (6x10" Safety/Self Actuated) Dwg 40141C
RVT/4S

2(3)PSV8417, Main Steam Relief Valve
(Code/Category 2/C) (6x10" Safety/Self Actuated) Dwg 40141C
RVT/4S

2(3)PSV8418, Main Steam Relief Valve
(Code/Category 2/C) (6x10" Safety/Self Actuated) Dwg 40141C
RVT/4S

S2(3)1301MU003 (4-003-D-620), Steam Supply - S/G E088 to AFW Turbine K007 Chk Vlv
(Code/Category 3/C) (4" Check/Self Actuated) Dwg 40141C
CVTC/RR (Note: 18)
CVTO/RR

Inservice Testing Program Valve List

STEAM (Continued)

S2(3)1301MU005 (4-005-D-620), Steam Supply - S/G E089 to AFW Turbine K007 Chk Vlv
(Code/Category 3/C) (4" Check/Self Actuated) Dwg 40141C
CVTC/RR (Note: 18)
CVTO/RR

S2(3)1301MU021 (3/4-021-P-145), Nitrogen Supply Isolation Valve to HV8421
(Code/Category NA/B) (3/4" Globe/Manual) Dwg 40141C
BMC/2A (Note: 20)

S2(3)1301MU027 (3/4-027-P-636), Instrument Air Supply Check Valve for HV8419
(Code/Category NA/AC) (3/4" Check/Self Actuated) Dwg 40141D
AT/2A (Note: 20)
CVTC/QT
BDTO/QT

S2(3)1301MU034 (3/4-034-P-636), Instrument Air Supply Check Valve for HV8421
(Code/Category NA/AC) (3/4" Check/Self Actuated) Dwg 40141C
AT/2A (Note: 20)
CVTC/QT
BDTO/QT

S21301MU1264 (3/8-1264-P-*), Valve HV8419 Equalizing Valve
(Code/Category NA/B) (3/8" Ball/Manual) Dwg 40141D
BMO/2A (Note: 20)

S31301MU1264 (3/8-1264-P-*), Valve HV8419 Equalizing Valve
(Code/Category NA/B) (3/8" Needle/Manual) Dwg 40141D
BMO/2A (Note: 20)

S21301MU1265 (3/8-1265-P-*), Valve HV8421 Equalizing Valve
(Code/Category NA/B) (3/8" Ball/Manual) Dwg 40141C
BMO/2A (Note: 20)

S31301MU1265 (3/8-1265-P-*), Valve HV8421 Equalizing Valve
(Code/Category NA/B) (3/8" Needle/Manual) Dwg 40141C
BMO/2A (Note: 20)

S2(3)1301MU1304 (3/4-1304-R-393), Inst Air Inlet Iso Vlv to HV8419 (Actuator)
(Code/Category NA/B) (3/4" Globe/Manual) Dwg 40141D
BMC/2A (Note: 20)

S2(3)1301MU1306 (3/4-1306-R-393), Inst Air Inlet Iso Vlv to HV8421 (Actuator)
(Code/Category NA/B) (3/4" Globe/Manual) Dwg 40141C
BMC/2A (Note: 20)

Inservice Testing Program Valve List

STEAM (Continued)

S2(3)1301MU1328 (3/4-1328-P-145), N2 Supply Isolation Gate Valve to HV8419
(Code/Category NA/B) (3/4" Gate/Manual) Dwg 40141D
BMC/2A (Note: 20)

SUMPS AND DRAINS

2(3)HV5803, Containment Sump to Radwaste Sump
(Code/Category 2/A) (3" Gate/Motor) Dwg 40117A
AJ/SP
BTC/QT (Note: 3)
PIT/2A

2(3)HV5804, Containment Sump to Radwaste Sump Isolation Valve
(Code/Category 2/A) (3" Globe/Air) Dwg 40117A
AJ/SP
BTC/QT (Note: 3)
FSTC/QT
PIT/2A

Alternate Testing Justifications

1.0 AUXILIARY FEEDWATER

1.1 **S2(3)1305MU088,** Drain Valve from Condensate Storage Tank T121 to T120 Sump

1.1.1 Test Requirement: OM-10, Para. 4.2.1.1, test nominally every three months.

1.1.2 Alternate Testing: Test this valve at cold shutdown intervals.

1.1.3 This valve is closed at all times except when crosstie between T121 and T120 enclosure is required. Valve provides access to the assured water inventory in T120 as part of the design basis of the condensate storage and transfer system and is deemed necessary for safe operation of the plant. NRC Branch Technical Position (BTP) Reactor System Branch (RSB) 5-1 states this shall be a seismic Category I source of supply and available with either loss of offsite or onsite power. Access to the condensate in T120 is based on gravity feeding through MU476, gravity feed valve from T120 Demineralizer Header to T121, as documented in Emergency Operating Instruction (EOI) SO23-12-9. Acess to that portion of the assured contents of T120 which would spill into the T120 enclosure, should T120 rupture following a DBE is assured by gravity feeding through MU088.

1.1.4 The MU088 exercise test involves installing a plug on tank T121 outlet rendering the tank inoperable. Both tanks T120 and T121 provide the water for Auxiliary Feedwater Pump suction. Isolating these tanks from each other renders the makeup water supply and therefore the AFW system inoperable for the duration of the test. Hence, the exercise test for this valve is deemed to be not practical during plant operation.

1.1.5 Testing this valve at cold shutdown intervals is consisten with NUREG 1482, para. 3.1.1. Installation of the plug in the 8" line constitutes a "hardship" that renderse the system inoperable for several hours, and would require manual operator actions to restore the system if an accident occurred while the test was in progress.

1.1.6 The risk outweighs the benefits achieved with a quarterly test since this is a normally closed manual valve that is only opened to perform this test. Being idle, there is minimal probability of failure.

Alternate Testing Justifications

1.2 **S2(3)1305MU121** AFP MP140 & 141 Crosstie Check Valve
S2(3)1305MU124 AFW to S/G E089 Check Valve
S2(3)1305MU126 AFP MP141 Discharge Check Valve
S2(3)1305MU448 AFW to S/G E088 Check Valve
S2(3)1305MU532 AFP MP504 Discharge Check Valve
S2(3)1305MU547 AFP MP140 Discharge Check Valve

1.2.1 Test Requirement: ISTC-3510, Active Category A, Category B and Category C check valves shall be exercised nominally every 3 months, except as provided by ISTC-3520, ISTC-3540, ISTC-3550, ISTC-3560, ISTC-5221and ISTC-5222.

1.2.2 Alternate Testing: ISTC-3522 (b). If exercising is not practicable during operation at power, it shall be performed during cold shutdown. These check valves will be tested in the full open and close direction each cold shutdown.

1.2.3 These check valves prevent backflow of feedwater from steam generator to the discharge of auxiliary pumps. They also prevent bypassing the flow from a running auxiliary feedwater pump backwards through an idle auxiliary feedwater pump.

1.2.4 These auxiliary feedwater check valves each have a safety function in both the open and close directions and therefore these valves are subjected to both open and close test. The close test is demonstrated by observing the cessation of flow. The open stroke test can only be performed by injecting 40°F auxiliary feedwater from the condensate storage tanks into the steam generators. This imposes significant operational risks such as feedwater perturbations and its impact on steam generator level control; steam generator enthalpy transients and reactor reactivity control problems.

1.2.5 The connection between the auxiliary feedwater pump discharge piping and the main feed piping usually has a steady-state temperature of approximately 440°F. Consequently, during the testing of these valves at power, the piping experiences a rapid cool down at the junction of the hot feedwater and cold auxiliary feedwater. It is not a good engineering practice to induce additional potentially harmful stresses on the feedwater piping.

1.2.6 Therefore, testing at the quarterly frequency in accordance with ISTC-3522 (a) is considered impracticable.

Alternate Testing Justifications

2.0 BORIC ACID MAKEUP (BAMU)

2.1 **2(3)HV9235,** BAMU T072 to Gravity Feed to Charging Pump Suction,
2(3)HV9240, BAMU T071 to Chrg Pump Suction Header Control Valve,
2(3)HV9247, BAMU Pump to Charging Pump Suction Control Valve.

2.1.1 Test Requirement: OM-ISTC-3510, Active Category B valves shall be exercised nominally every 3 months.

2.1.2 Alternate Testing: Test the valves at cold shutdown. This avoids uncontrolled boration and reactivity transient.

2.1.3 These valves are normally closed to block concentrated boric acid to the charging pump suction. When open, the contents of the boric acid system is directed to the Regenerative Heat Exchanger via the charging pumps and directly into the Reactor Coolant System.

2.1.4 Opening these valves during plant operation would result in injecting concentrated boric acid into the reactor coolant system, causing an undesirable reactivity transient.

2.2 **S2(3)1218MU033,** BAMU Pump 2(3)P175 Discharge Check Valve,
S2(3)1218MU035, BAMU Pump 2(3)P174 Discharge Check Valve

2.2.1 Test Requirement: OM-ISTC-3510, Active Category C check valves shall be exercised nominally every 3 months.

2.2.2 Alternate Testing: Test the valves at cold shutdown. This avoids uncontrolled boration and reactivity transient.

2.2.3 These valves close to prevent backflow through an idle Boric Acid Transfer Pump thus preventing bypass of the discharge of the running pump and open to allow flow from the associated BAMU pump to the Charging pump suction.

2.2.4 The only flow path through these valves which allows test flow is into the Volume Control Tank (VCT) or to the suction of the Charging Pumps. The only source of water to open these valves is from the BAMU Pumps and is concentrated boric acid. As a result, exercising of these valves during power operation would result in uncontrolled boration of the reactor coolant system and an undesirable reactivity transient.

Alternate Testing Justifications

3.0 CHEMICAL AND VOLUME CONTROL

3.1 **2(3)HV9200,** Charging Pumps to Regenerative Heat Exchanger E063

3.1.1 Test Requirement: OM-ISTC-3510, Active Category A valves shall be exercised nominally every 3 months.

3.1.2 Alternate Testing: Test the valve at cold shutdown. This shifts the testing to a period during which is allowed by the Technical Specifications and avoids Reactor Coolant System pressure and boration control problems or complications.

3.1.3 This valve is the Containment Isolation for the Charging Pump Discharge into the Containment, where it goes to the Regenerative Heat Exchanger. It must open to allow normal charging flow and close if there is a need to isolate this line from the regenerative heat exchanger. It is in series with a check valve inside the containment (MU122) which also closes to isolate backflow from the Regenerative Heat Exchanger.

3.1.4 Exercising HV9200 while the plant is at power would isolate normal charging to the Reactor Coolant System. This would result in a non-compliance with Technical Specification 3.1.9, which requires two flow paths for boration during power operation. In addition, exercising this air operated valve during plant power operation would require securing letdown and charging entirely. This is a lengthy plant evolution as is the restoration of letdown following the exercise test. Further, stopping charging and letdown flow imposes a large thermal transient on the components in the charging/letdown path.

3.2 **2(3)HV9205,** Regenerative Heat Exchanger to Letdown Heat Exchanger,
2(3)TV9267, Letdown Containment Isolation Valve

3.2.1 Test Requirement: OM-ISTC-3510, Active Category A valves shall be exercised nominally every 3 months.

3.2.2 Alternate Testing: Test these valves at cold shutdown.

Alternate Testing Justifications

3.2.3 These valves block letdown flow from the Regenerative Heat Exchanger to the Letdown Heat Exchanger. Exercising these valves during power operation would result in interruption of flow and allow the associated heat exchanger temperatures to equalize for a short period. Later, upon restoration of flow as the valves are opened, the hot reactor coolant flow through the Regenerative Heat Exchanger would result in return to the former "equilibrium" temperatures. This would result in damaging thermal stress transients on the regenerative heat exchanger and reactor coolant system charging nozzles. Exercising these valves at cold shutdown shifts the testing to a period during which temperatures are much closer to ambient on both sides of the heat exchanger. As a result, the thermal transients from momentary interruption of flow are almost completely avoided.

3.3 **2(3)LV0227B,** VCT Outlet Valve,
S2(3)1208MU015, VCT to Charging Pump Suction Check Valve

3.3.1 Test Requirement: OM-ISTC-3510, Active Category A valves, and Category AC check valves shall be exercised nominally every 3 months.

3.3.2 Alternate Testing: Test these valves at cold shutdown.

3.3.3 LV0227B regulates the Volume Control Tank (VCT) Level by throttling the outlet to the Charging Pumps. Check valve MU015 prevents backflow into the VCT from the Charging pump suction piping.

3.3.4 Exercising these valves closed requires shifting charging pump suction and injecting highly concentrated boric acid into the Reactor Coolant System, causing an undesirable reactivity transient. Exercising these valves at cold shutdown avoids the uncontrolled and unwanted boration.

3.4 **S2(3)1208MU045,** Chemical Addition Tank T001 to Charging Pump Suction Header

3.4.1 Test Requirement: OM-ISTC-3510, Active Category C check valves shall be exercised nominally every 3 months.

3.4.2 Alternate Testing: Verify closure at cold shutdown intervals.

3.4.3 This valve provides the pressure boundary between safety related and non-safety related piping. Valve is normally closed and required to remain closed during accident mitigation when pressure boundary integrity is required to be maintained.

Alternate Testing Justifications

3.4.4 This test requires a backpressure from the charging pump suction header that can only be achieved when the charging pumps are secured for a period of time, thus requiring Modes 5 and 6. Additionally, an exercise test would result in unnecessary/undesirable dilution of the Reactor Coolant System if performed during power operation.

3.5 S2(3)1208MU066, Charging Pumps Combined Discharge Valve to HPSI Header

3.5.1 Test Requirement: OM-ISTC-3510, Active Category C check valves shall be exercised nominally every 3 months.

3.5.2 Alternate Testing: Open stroke test at cold shutdown intervals.

3.5.3 This valve is normally closed and is isolated by one normally closed valve upstream, 1208MU065 and two normally closed valves downstream, 1204MU154 and 1208MU005. This valve prevents backflow from the HPSI header to the charging pump discharge header. Valve is located in the auxiliary charging path used for mitigating a high energy line break (HELB) of the charging line inside containment and re-establishing charging flow.

3.5.4 When valve is stroked open using the auxiliary charging path, cold borated water will be injected into the reactor coolant system via the HPSI header because the regenerative heat exchanger is bypassed. This results in thermal shock, and possible damage to the associated system connection/nozzles.

3.6 S2(3)1208MU082, Gravity Feed - BAMU Tanks to Charging Pump P190 Suction,
S2(3)1208MU083, BAMU Pumps to Charging Pumps Suction Header

3.6.1 Test Requirement: OM-ISTC-3510, Active Category C check valves shall be exercised nominally every 3 months.

3.6.2 Alternate Testing: Test the valves at cold shutdown. This avoids uncontrolled boration and consequent reactor shutdown.

3.6.3 These valves block backflow from the charging pump suction to the boric acid system. When open, the contents of the boric acid system is directed to the charging pump suction and via to the Regenerative Heat Exchanger directly into the Reactor Coolant System. Both valves are normally closed. They open to provide flow from the BAMU tanks through the gravity feed valves during safety injection upon failure of BAMU pumps or if the BAMU pumps are operating during safety injection, MU082 remains closed to prevent flow diversion back to the BAMU tanks.

Alternate Testing Justifications

3.6.4 Testing these valves in the open direction would result in injecting concentrated boric acid into the reactor coolant system, causing plant shutdown

3.7 LEFT INTENTIONALLY BLANK

3.8 S2(3)1208MU094, Check valve - Coolant Polishing Demineralizer to Charging Pump Suction Header

3.8.1 Test Requirement: OM-ISTC-3510, Active Category C check valves shall be exercised nominally every 3 months.

3.8.2 Alternate Testing: Test this valve at cold shutdown intervals on Unit 2 and at refueling intervals on Unit 3. This will avoid unplanned dilutions and potential power excursions.

3.8.3 This valve provides the pressure boundary between Safety Related and Non-Safety Related piping. Valve is normally closed and required to remain closed during accident mitigation when pressure boundary integrity is required to be maintained. Additionally, this valve will cause an unplanned dilution of the Reactor Coolant System if a exercise test is performed during power operation.

3.8.4 The Unit 2 valve and the Unit 3 valve are tested differently. The Unit 2 valve has a test tee located upstream, and valve closure is verified by measuring leakage past the valve. Performing these tests at cold shutdown intervals while measuring leakage is consistent with OM-ISTC-5221(a).

3.8.5 A test tee does not exist in Unit 3, and the valve is verified CLOSE using radiography. Performing radiography at refueling intervals is consistent with OM-ISTC-5221(a).

3.9 S2(3)1208MU122, Charging Pumps Check Valve to Regenerative Heat Exchanger E063

3.9.1 Test Requirement: OM-ISTC-3510, Active Category AC check valves shall be exercised nominally every 3 months.

3.9.2 Alternate Testing: This valve will be verified closed during refueling outages while performing "Appendix J" testing.

Alternate Testing Justifications

3.9.3 This containment isolation valve opens to allow normal charging flow to the reactor coolant system. It is located inside containment and is in constant use. Closing this valve during power operation (or any time reactor charging flow is required) results in cessation of flow through the regenerative heat exchanger and results in an extreme thermal transient. Additionally, the system arrangement provides no source of backflow or pressure to provide for a CVTC other than the containment penetration leak rate testing connections. Accordingly, to complete the CLOSE stroke test (CVTC), the reactor refueling interval seat leakage test is used as the verification of valve closure. This is consistent with the requirements of OM-ISTC-5221(a).

3.9.4 OM-ISTC-3522(a) states that open and close tests need only be performed at an interval when it is practicable to perform both tests. Since it is not possible to CLOSE EXERCISE test these valves at quarterly intervals, verifying the valves OPEN at a quarterly interval would not satisfy the code requirement to exercise the valves. Therefore, the interval for the OPEN EXERCISE tests is set at the same interval as the CLOSE EXERCISE tests.

3.10 LEFT INTENTIONALLY BLANK

4.0 CHILLED WATER

4.1 LEFT INTENTIONALLY BLANK

5.0 COMPONENT COOLING WATER

5.1

2(3)HV6211,	Containment Isolation Valve - CCW Non-Critical Loop,
2(3)HV6212,	CCW from Heat Exchanger E001A to Non-Critical Loop,
2(3)HV6213,	Component Cooling Discharge to Non-Critical Loop,
2(3)HV6216,	Containment Isolation - CCW Non-Critical Loop Return,
2(3)HV6218,	Component Cooling Water Pump Suct Fm Non-Critical Loop,
2(3)HV6219,	Component Cooling Water Pump Suct Fm Non-Critical Loop,
2(3)HV6223,	Containment Isolation - CCW Non-Critical Loop Supply,
2(3)HV6236,	Containment Isolation - CCW Non-Critical Loop Return,

5.1.1 Test Requirement: OM-ISTC-3510, Active Category A and Category B valves shall be exercised nominally every 3 months.

5.1.2 Alternate Testing: Stroke these valves at cold shutdown intervals to avoid damage to plant equipment which can result from interruption of CCW flow.

Alternate Testing Justifications

5.1.3 HV6211 and HV6216 are the CCW non-critical loop supply and return containment isolation valves (outside). HV6223 and HV6236 are the CCW non-critical loop supply and return containment isolation valves (inside). They provide isolation of the containment CCW header. They are closed upon receipt of a containment isolation actuation signal [CIAS].

5.1.4 HV6212 and HV6213 isolate the non-critical loop supply from the discharge of CCW heat exchanger 1A and 2B.

5.1.5 HV6218 and HV6219 isolate the non-critical loop return flow from CCW critical loops respectively "A" and "B" return piping.

5.1.6 Exercising HV6211, HV6216, HV6223, and HV6236 during operation would secure or direct cooling water flow from RCP seals, which could result in seal damage and plant shutdown. Similarly, exercising HV6212 and HV6213 would isolate the non-critical loop supply from the discharge of CCW heat exchanger 1A and 2B and secure CCW flow to the RCP seals with the same result.

5.1.7 Exercising HV6218 and HV6219 would isolate the non-critical loop return flow from CCW critical loops return piping and have the same effect.

5.2 **2(3)PCV6358,** CCW Surge Tank T-003 N2 Backpressure Regulator, and **2(3)PCV6361,** CCW Surge Tank T-004 N2 Backpressure Regulator

5.2.1 Test Requirement: OM-ISTC-3510, Active Category AC valves shall be exercised nominally every 3 months.

5.2.2 Alternate Testing: Test at Refueling Intervals.

5.2.3 These valves maintain CCW surge tank maximum pressure at 41 psig and valve closes when tank pressure drops below 41 psig. They remain closed and leak tight to prevent loss of Nitrogen inventory and/or consequent loss of adequate CCW pump suction pressure.

5.2.4 During plant refueling, each CCW train is taken out of service for maintenance and these valves can be tested at that time.

Alternate Testing Justifications

5.2.5 Closure of these valves is verified by raising the control setpoint of the supply nitrogen regulator and observing that pressure increases to the open setting of the regulator. The pressure setting on the regulator is lowered to below the closing set pressure and closure of the regulator is determined by observing that pressure stabilizes at the closure set pressure. This methodology involved disturbing the calibration set point of the supply regulator. Following the testing the supply regulator must be reset and calibrated.

5.3 INTENTIONALLY LEFT BLANK

6.0 CONDENSATE AND FEEDWATER

6.1 2(3)HV1105, Feedwater Bypass Valve for Steam Generator E089,
2(3)HV1106, Feedwater Bypass Valve for Steam Generator E088

6.1.1 Test Requirement: OM-ISTC-3510, Active Category B valves shall be exercised nominally every 3 months.

6.1.2 Alternate Testing: Test these valves at cold shutdown intervals.

6.1.3 These valves serve to isolate the bypass line around the main feedwater regulation valves.

6.1.4 These valves cannot be full stroke exercised during power operation as this would disturb steam generator level control, which could result in plant shutdown.

6.2 2(3)HV4047, Feedwater Block Valve - Steam Generator E088,
2(3)HV4048, Feedwater Isolation Valve - Steam Generator E088,
2(3)HV4051, Feedwater Block Valve - Steam Generator E089,
2(3)HV4052, Feedwater Isolation Valve - Steam Generator E089

6.2.1 Test Requirement: OM-ISTC-3510, Active Category B valves shall be exercised nominally every 3 months.

6.2.2 Alternate Testing: Test these valves at cold shutdown intervals.

6.2.3 These valves block feed flow in the main feed lines entering containment. They are all outside the containment. Valves 2(3)HV4048 and 2(3)HV4052 are containment Isolation valves.

6.2.4 Full stroke exercising these valves during power operation would result in loss of feedwater flow to the steam generator, which could result in a plant shutdown.

Alternate Testing Justifications

6.3 **S2(3)1305MU036,** Main Feed Check at Steam Generator E089
S2(3)1305MU129, Main Feed Check at Steam Generator E088

6.3.1 Test Requirement: OM-ISTC-3510, Active Category C check valves shall be exercised nominally every 3 months.

6.3.2 Alternate Testing: These valves will be partially disassembled, inspected and manually full stroked at each refueling outage on a rotating basis (one valve per refueling).

6.3.3 During partial disassembly, the valves' internals will be visually inspected for worn or corroded parts, and the valves' disk will be manually exercised. If it is found that the full stroke capability of the disassembled valve is in question, the other valve in this group will be similarly disassembled and inspected and manually full stroked during the same outage.

NOTE: The use of non-intrusive test techniques to verify closure have been considered, and determined to be impractical at this point. The valves are located in containment, and performance of magnetic and/or acoustics would required working in containment at power, which would increase radiation exposure. Ultrasonics have been attempted in the past, but were unsuccessful because ultrasonics depend upon water as a medium, and the water drains from these valves upon shutdown. Radiography may be feasible, but would require securing access to the refueling deck during the outage, thus impacting the critical path of the outage.

6.3.4 These valves are in the main feedwater supply to the steam generators, and are normally full open while main feedwater is supplied to the steam generators. To exercise these valves CLOSE would require securing main feedwater to the steam generators. During a loss of feedwater accident, these check valves close isolating the main feedwater piping from auxiliary feedwater flow.

6.3.5 A full open stroke of the valves is performed upon return to power.

6.3.6 OM-ISTC-5221(c) allows that a valve may be disassembled as an alternative to full flow testing

6.3.7 Disassembly and inspection is performed in accordance with, and does not deviate from, OM-ISTC-5221(c).

6.4 **INTENTIONALLY LEFT BLANK**

Alternate Testing Justifications

7.0 CONTAINMENT HVAC (NORMAL)

7.1 **2(3)HV9948,** Containment Purge Supply,
2(3)HV9949, Containment Purge Supply,
2(3)HV9950, Containment Purge Exhaust,
2(3)HV9951, Containment Purge Exhaust

7.1.1 Test Requirement: OM-ISTC-3510, Active Category A valves shall be exercised nominally every 3 months.

7.1.2 Alternate Testing: Test these valves at cold shutdown intervals.

7.1.3 These valves provide Containment Isolation for the main ventilation piping into and out of containment.

7.1.4 These valves are passive except in Modes 5 and 6, at which time they are tested. In addition, exercising these valves during plant power operation would result in non-compliance with the Technical Specification 3.6.3, which requires the valves to be sealed closed in Modes 1-4. Per LCS Table 3.6.101-1, power is required to be removed. Testing these valves at cold shutdown intervals in lieu of restoring power is consistent with NUREG 1482, para. 3.1.1.

8.0 CONTAINMENT SPRAY

8.1 **2(3)HV8150,** Isolation Valve - Shutdown Cooling System Heat Exchanger E004 to LPSI Header,
2(3)HV8151, Isolation Valve - Shutdown Cooling System Heat Exchanger E003 to LPSI Header

8.1.1 Test Requirement: OM-ISTC-3510, Active Category B valves shall be exercised nominally every 3 months.

8.1.2 Alternate Testing: Test these valves at cold shutdown intervals.

8.1.3 These valves provide isolation between the outlet of the Shutdown Cooling System (SDCS) heat exchanger and the LPSI discharge header to the Reactor Coolant System. They are opened for Shutdown Cooling System operation and must remain closed during power operation.

8.1.4 For ECCS system operability (in plant Modes 1, 2 and 3) the Technical Specifications Surveillance SR 3.5.2.1 require verification at least once per twelve hours that HV8150 and HV8151 are closed and power to the valve operators is removed.

Alternate Testing Justifications

8.1.5 Testing these valves at a cold shutdown interval is consistent with NUREG 1482, Para. 3.1.1. Removing these valves from power lockout, restoring power and opening them in Modes 1, 2 or 3 involves a hardship; i.e., repositioning of a breaker from "off" to "on", and closing the manual isolation valves for HV8150 and HV8151. Manual action would be required to restore the ECCS if an accident occurred while the test was in progress.

8.1.6 This risk outweighs the benefits achieved with a quarterly test in light of the facts that (1) these valves are in the idle shutdown cooling loops that are not used except when the plant is placed in cold shutdown, (2) being in power lockout, these valves have a minimal probability of failure. They are idle (potential sources of failure are very limited), and, (3) the realignment of the system for the exercise tests in question invalidates the assumptions in the Safety Analysis (see the Technical Specification Bases, B 3.5.2).

8.2 **S2(3)1206MU004,** Containment Isolation Stop Chk Vlv - Spray Header #1
S2(3)1206MU006, Containment Isolation Stop Chk Vlv - Spray Header #2

8.2.1 Test Requirement: OM-ISTC-3510, Active Category AC check valves shall be exercised nominally every 3 months.

8.2.2 Alternate Testing: At each refueling outage, (1) test the valves by partial disassembly, inspection and manual stroking on a rotating basis (one valve per refueling), and, (2) perform a partial stroke test (OPEN) of each valve using system flow.

8.2.3 During partial disassembly the valve internals shall be visually inspected for worn or corroded parts, and the valve disks will be manually exercised. If it is found the full stroke capability of the disassembled valve is in question, the other valve will be similarly disassembled and inspected and manually full stroked during the same outage.

8.2.4 Following reassembly and prior to return to service, these valves will be tested by partial stroking using system flow.

8.2.5 FULL FLOW TESTING

These valves open to allow a flow of water from the containment spray pump discharge into the containment spray ring headers. They are inside the containment building in the line leading from the Containment penetration to the riser supplying the ring headers and spray nozzles. As a consequence full-stroke exercising these valves through this flow path using the containment spray pumps would result in a containment spray-down and consequent potential equipment damage as well as create additional liquid radwaste to be removed from the Containment Building sump.

Alternate Testing Justifications

8.2.6 PARTIAL FLOW TESTING

The riser inside the containment building is drained each refueling and refilled prior to returning the plant to service. When the riser is being filled with water, the water can be put in the system upstream of each stop check valve. Therefore, this flow through the Spray Header Containment Isolation Stop Check Valves during the filling of the riser would result in a partial stroke of these valves. Other methods to achieve a partial open stroke are also available.

8.2.7 NON-INTRUSIVE TESTING

The use of non-intrusive test techniques to verify full open capability has been considered, and determined to be impractical at this point. Acoustics were attempted to determine whether the valves went full open at a reduced flow, but no opening impact could be detected.

8.2.8 CONCLUSION

OM-ISTC-5221(c) identifies partial disassembly and inspection as an acceptable alternative for stroking a valve when it is impractical to use flow. In this case, there is no way to stroke these valves with the existing system design using flow. The Code required full-stroke testing using flow could only be performed after considerable modification of the system design, such as installation of an instrumented test loop. The high costs of the necessary design changes involved would not be justified by the improvement of the valve testing. Further, the additional valves, piping, supports and penetrations could result in reduced plant reliability.

8.2.9 TEST SCHEDULE

.1 Each valve is disassembled and inspected each refueling outage which requires additional draining of the associated system piping over and above draining the riser as previously discussed. This generates a significant amount of radioactive liquid waste. In addition, considerable radiation exposure can be received by personnel performing the partial disassembly, hand stroking and inspection. As a consequence, there is a clear advantage in reducing the number of these tests required in each refueling.

.2 OM-ISTC-5221(c) allows development of staggered testing of like components by establishing an inspection plan for similar groups of valves. Disassembly and inspection is performed in accordance with, and does not deviate from, OM-ISTC-5221(c).

Alternate Testing Justifications

8.3 **S2(3)1206MU010,** Pump 2(3)P012 Miniflow Stop Check Valve,
S2(3)1206MU011, Pump 2(3)P013 Miniflow Stop Check Valve

8.3.1 Test Requirement: OM-ISTC-3510, Active Category C check valves shall be exercised nominally every 3 months.

8.3.2 Alternate Testing: Test these valves at refueling intervals.

8.3.3 These stop-check valves direct miniflow recirculation from the Containment Spray pumps back to the Refueling Water Storage Tanks.

8.3.4 Providing flow or pressure to verify completion of the closed stroke requires placing the miniflow line out of service for the HPSI, LPSI and Containment Spray Systems.

8.3.5 The only way to verify closure of these valves is to measure leakage into a test volume upstream of the check valves using a hydro pump. The elaborate valve line-up, test equipment required, and high man-hours required to perform this test make it impractical to perform on a more frequent basis. Performing the CLOSE test of these valves in conjunction with the LEAKAGE test at refueling intervals is consistent with OM-ISTC-5221(a).

8.3.6 OM-ISTC-3522(a) states that open and close tests need only be performed at an interval when it is practicable to perform both tests. Therefore, the interval for the OPEN EXERCISE test is set at the same interval as the CLOSED EXERCISE test.

8.4 **S2(3)1206MU012,** Spray Pump 2(3)P012 Discharge Stop Check Valve,
S2(3)1206MU014, Spray Pump 2(3)P013 Discharge Stop Check Valve,
S2(3)1206MU029, Spray Pump 2(3)P012 Discharge Check Valve to Shutdown Cooling System Heat Exchanger E004,
S2(3)1206MU030, Spray Pump 2(3)P013 Discharge Check Valve to Shutdown Cooling System Heat Exchanger E003

8.4.1 Test Requirement: OM-ISTC-3510, Active Category C check valves shall be exercised nominally every 3 months.

8.4.2 Alternate Testing: Test these valves at reactor refueling intervals .

8.4.3 Check valves prevent back-flow through idle spray pumps and associated loss of flow and pressure from the outlet of the operating spray pump.

Alternate Testing Justifications

8.4.4 The OPEN EXERCISE test for these valves requires a flow rate of 2300-2750 gpm. The flow path for this test involves establishing flow through S2(3)1204MU162 to the RWST. The line-up uses a portion of the common LPSI header for the flow path. Aligning the Containment Spray (CSS) and LPSI systems in this manner renders one train of containment spray and both trains of LPSI inoperable. With the LPSI and CSS aligned to support this testing, LPSI flow from both trains is diverted to the RWST. This constitutes a loss of LPSI system function and places the plant in a condition which is outside the licensing basis. Because of this loss of system function, MU012, 014, 029 and 030 are excluded from quarterly testing consistent with the guidance in NUREG 1482, Para. 3.1.1(1).

8.4.5 Unit 2 has a vent between valve pairs that allow the CLOSE tests to be performed by measuring leakage using a test rig. Performing these tests at refueling intervals while measuring leakage is consistent with OM-ISTC-5221(a). However, due to the complexity of the alignments required to support leak testing, radiography is the preferred method to verify closure on Unit 2.

8.4.6 Unit 3 does not have vents and the check valves are verified CLOSE using radiography. The radiography is performed at refueling intervals on a rotating basis and is consistent with OM-ISTC-5221(a).

8.4.7 OM-ISTC-3522(a) states that open and close tests need only be performed at an interval when it is practicable to perform both tests. Since it is not possible to OPEN EXERCISE test these valves at a quarterly interval, verifying the valves CLOSED at a quarterly interval would not satisfy the code requirement to exercise the valves. Therefore, the interval for the CLOSED EXERCISE test is set at the same interval as the OPEN EXERCISE test.

9.0 FUEL STORAGE POOL AND REFUELING

9.1 **2(3)LV0227C,** RWST To Charging Pump Suction,
S2(3)1219MU052, RWST T006 to Charging Pump Suction Header

9.1.1 Test Requirement: OM-ISTC-3510, Active Category B valves, and Category C check valves shall be exercised nominally every 3 months.

9.1.2 Alternate Testing: Test these valves at cold shutdown intervals.

9.1.3 These valves provide flow of boric acid from the RWST into the suction of the charging pumps.

Alternate Testing Justifications

9.1.4 Opening these valves would result in injecting highly concentrated boric acid into the reactor coolant system, causing undesirable reactivity transient.

10.0 NITROGEN GAS

10.1 **S2(3)2418MU002,** Nitrogen Supply to Containment,
S2(3)2418MU108, Nitrogen Supply to Safety Injection Tanks

10.1.1 Test Requirement: OM-ISTC-3510, Active Category AC check valves shall be exercised nominally every 3 months.

10.1.2 Alternate Testing: Test these valves at refueling intervals.

10.1.3 Containment isolation inside containment for nitrogen supply to various components.

10.1.4 The CVTC is performed in conjunction with the 10 CFR 50, "Appendix J" seat leakage test. Testing of these valves requires utilization of LLRT test equipment and containment entry. Performing the CLOSE test of these valves in conjunction with the LEAKAGE test at refueling intervals is consistent with OM-ISTC-5221(a).

Alternate Testing Justifications

10.2 **S2(3)2418MU356,** Backup Nitrogen Cylinder MV-057 Check Valve
S2(3)2418MU358, Backup Nitrogen Cylinder MV-058 Check Valve
S2(3)2418MU360, Backup Nitrogen Cylinder MV-059 Check Valve

S2(3)2418MU362, Backup Nitrogen Cylinder MV-060 Check Valve
S2(3)2418MU364, Backup Nitrogen Cylinder MV-061 Check Valve
S2(3)2418MU366, Backup Nitrogen Cylinder MV-062 Check Valve

S2(3)2418MU368, Backup Nitrogen Cylinder MV-063 Check Valve
S2(3)2418MU371, Backup Nitrogen Cylinder MV-064 Check Valve
S2(3)2418MU373, Backup Nitrogen Cylinder MV-065 Check Valve

S2(3)2418MU375, Backup Nitrogen Cylinder MV-066 Check Valve
S2(3)2418MU377, Backup Nitrogen Cylinder MV-067 Check Valve
S2(3)2418MU379, Backup Nitrogen Cylinder MV-068 Check Valve

S2(3)2418MU387, Backup Nitrogen Cylinder MV-069 Check Valve
S2(3)2418MU389, Backup Nitrogen Cylinder MV-070 Check Valve
S2(3)2418MU406, Backup Nitrogen Cylinder MV-102 Check Valve

S2(3)2418MU408, Backup Nitrogen Cylinder MV-103 Check Valve
S2(3)2418MU410, Backup Nitrogen Cylinder MV-104 Check Valve
S2(3)2418MU412, Backup Nitrogen Cylinder MV-105 Check Valve

S2(3)2418MU414, Backup Nitrogen Cylinder MV-106 Check Valve
S2(3)2418MU416, Backup Nitrogen Cylinder MV-107 Check Valve

10.2.1 Test Requirement: OM-ISTC-3510, Active Category Category C check valves shall be exercised nominally every 3 months.

10.2.2 Alternate Testing: Test at cold shutdown intervals.

10.2.3 These valves open to admit backup nitrogen to the CCW surge tanks from the individual nitrogen storage bottles. They close to prevent depressurization in the event a bottle is removed for replacement.

10.2.4 Testing of these valves may require placing the associated Component Cooling Water Loop OOS per Technical Specification 3.7.7.

10.2.5 These are non-code valves. The analyses provided in Reference 2.1.1 specifies the type(s) of tests which must be performed. A Cold Shutdown interval has been determined to be sufficient to provide assurance of operability for these valves, and is consistent with GL 89-04, Response to Questions 53 and 110, and NUREG 1482, Section 3.4.

Alternate Testing Justifications

10.3 **S2(3)2418MU398,** Nitrogen Supply to Component Cooling Water Surge Tank T004B,
S2(3)2418MU402, Nitrogen Supply to Component Cooling Water Surge Tank T003A

10.3.1 Test Requirement: OM-ISTC-3510, Active Category AC check valves shall be exercised nominally every 3 months.

10.3.2 Alternate Testing: Stroke at refueling intervals.

10.3.3 These check valves provide nitrogen makeup to the CCW surge tanks. To achieve a CLOSE stroke of these check valves, the upstream volume of the associated piping must be isolated and depressurized. This renders the associated CCW surge tank and therefore the associated CCW loop to be inoperable.

10.3.4 The test involves installation of a flowmeter on a test tee and measuring leakage flow past the valves. Performing the CLOSE test of these valves in conjunction with the LEAKAGE test at refueling intervals is consistent with OM-ISTC-5221(a).

11.0 NUCLEAR SAMPLING

11.1 **S2(3)1212MU261,** SI System Loop B to Central Liquid Sample Sys Chk Vlv.
S2(3)1212MU262, SI System Loop A to Central Liquid Sample Sys Chk Vlv
S2(3)1212MU580, Nuclear Service Water to Liquid Sample Sys Chk Vlv

11.1.1 Test Requirement: OM-ISTC-3510, Active Category AC check valves shall be exercised nominally every 3 months.

11.1.2 Alternative Testing: These valves will be verified closed at Refueling intervals.

11.1.3 The only way to verify closure of these valves is to measure leakage into a test volume upstream of the check valves using a hydro pump. The closed tests are performed in conjunction with the leakage tests on MU261, MU262, MU580, MU010, and HV0588B. The elaborate valve line-up, test equipment required, and high man-hours required to perform this test make it impractical to perform on a more frequent basis. Performing the CLOSE tests in conjunction with the LEAKAGE tests at refueling intervals is consistent with OM-ISTC-5221(a).

Alternate Testing Justifications

12.0 NUCLEAR SERVICE WATER

12.1 **S2(3)1415MU236,** Containment Isolation Check Valve - Nuclear Service Water

12.1.1 Test Requirement: OM-ISTC-3510, Active Category AC check valves shall be exercised nominally every 3 months.

12.1.2 Alternate Testing: Test this valve at refueling intervals.

12.1.3 This valve provides containment isolation for the penetration conveying Nuclear Service Water into the containment for use during maintenance, system fill, refueling, etc.

12.1.4 The CLOSE stroke verification requires containment access. This is only practical during plant shutdown.

13.0 REACTOR COOLANT

13.1 **2(3)HV0296A,** Reactor Head Vent,
2(3)HV0296B, Reactor Head Vent,
2(3)HV0297A, Pressurizer Vent Valve,
2(3)HV0297B, Pressurizer Vent Valve,
2(3)HV0298, Vent to Containment from Reactor Head/Pressurizer,
2(3)HV0299, Quench Tank Inlet from Reactor Head/Pressurizer Vent

13.1.1 Test Requirement: OM-ISTC-3510, Active Category B valves shall be exercised nominally every 3 months.

13.1.2 Alternate Testing: Stroke these valves open and closed at cold shutdown intervals.

13.1.3 The function of these valves is to vent various components in the Reactor Coolant System (RCS).

13.1.4 Power is normally removed from these solenoid valves because they are part of the RCS boundary and opening them while the RCS is pressurized would release RCS to the vent system. Both the very restrictive ACTION per LCS 3.4.102 (4 hours) and the risk of a potential accident, dictate against the quarterly IST interval in Modes 1 through 4.

.1 LCS 3.4.102, Reactor Coolant Gas Vent System, requires the listed valves all remain closed in Modes 1 through 4. If any of these valves are inoperable or open, the ACTION must be completed within 4 hours.

Alternate Testing Justifications

13.1.5 The design redundancy of the RCS Gas Vent System serves to minimize the probability of inadvertent or irreversible actuation while ensuring that a single failure of a vent valve, or control system does not prevent isolation of the vent path (from LCS 3.4.102, Basis). If, in Modes 1 through 4, a valve were to remain open during an exercise IST, the potential for a Loss of Coolant Accident (LOCA) would exist.

13.2 **2(3)HV9201,** Regenerative Heat Exchanger E063 to Auxiliary Spray,
S2(3)1201MU019, Auxiliary Spray Check Valve,
S2(3)1201MU129, Auxiliary Spray to Reactor Coolant System from Charging Pumps

13.2.1 Test Requirement: OM-ISTC-3510, Active Category B valves, and Category C and AC check valves shall be exercised nominally every 3 months.

13.2.2 Alternate Testing: Stroke the valves at cold shutdown intervals.

13.2.3 These valves provide flow to the auxiliary spray into the pressurizer, either through the regenerative heat exchanger, or bypassing the regenerative heat exchanger.

13.2.4 Exercising would result in unnecessary thermal transients and stress on the pressurizer spray nozzle.

13.3 LEFT INTENTIONALLY BLANK.

13.4 **2(3)HV9204,** Reactor Coolant System Loop 2B Letdown to Regenerative Heat Exchanger,
2(3)TV0221, Letdown Isolation Valve

13.4.1 Test Requirement: OM-ISTC-3510, Active Category B valves shall be exercised nominally every 3 months.

13.4.2 Alternate Testing: Stroke the valves closed at cold shutdown intervals.

13.4.3 These valves are in the letdown line from the Reactor Coolant System to the Regenerative Heat Exchanger and close to block flow through these lines.

13.4.4 Exercising these valves during power operation would result in unnecessary thermal stress transients on the regenerative heat exchanger and reactor coolant system charging nozzles.

Alternate Testing Justifications

13.5 2(3)HV9217, 2(3)HV9218, Reactor Coolant System Bleed Off to Volume Control Tank, Reactor Coolant System Bleed Off to VCT Isolation Valve Inside Containment

13.5.1 Test Requirement: OM-ISTC-3510, Active Category A valves shall be exercised nominally every 3 months.

13.5.2 Alternate Testing: Stroke the valves closed at cold shutdown intervals.

13.5.3 These valves are the containment isolation valves for the reactor coolant pump seal leakoff line to the Volume Control Tank (VCT).

13.5.4 Exercising these valves could result in Reactor Coolant Pump (RCP) seal failure and subsequent reactor shutdown. Operation of the RCP mechanical seals depends on steady bleed-off flow to maintain proper staging and seal cooling. Without continuous bleed-off the seals very quickly overheat and are destroyed. Because of historical performance problems with our RCP seals, great care is exercised to avoid even momentary fluctuation or interruption of seal bleed-off flow. Exercising these valves while the RCPs are in operation interrupts the seal bleed-off flow and consequently, HV9217 and HV9218 cannot be shut while the RCPs are in operation without the risk of destruction of the RCP seals.

13.6 2(3)XCV9219, Thermal Relief of Regenerative Heat Exchanger

13.6.1 Test Requirement: OM-ISTC-3510, Active Category C check valves shall be exercised nominally every 3 months.

13.6.2 Alternate Testing: Test at Cold Shutdown Intervals.

13.6.3 This is a spring loaded check valve used as a thermal relief valve in the event charging is isolated (Closure of 2(3)HV9202 and 2(3)HV9203) without isolating letdown. This bypass line can be credited as the boration flow path required by Technical Specification 3.1.10 when normal charging flow is not available. As such, this normally closed valve is required to open if is to be credited as a boration flow path.

13.6.4 This valve is tested OPEN by closing 2(3)HV9202 and 2(3)HV9203 and ensuring that flow still exists. The justification for not closing 2(3)HV9202 and 2(3)HV9203 quarterly (i.e., testing at Cold Shutdown intervals) is exercising these valves during power operation would result in unnecessary thermal stress transients on the regenerative heat exchanger and reactor coolant system charging nozzles.

Alternate Testing Justifications

13.7 S2(3)1201MU020, Charging Line Chk Vlv to Reactor Coolant Sys Loop 2A

13.7.1 Test Requirement: OM-ISTC-3510, Active Category C check valves shall be exercised nominally every 3 months.

13.7.2 Alternate Testing: Test valve at cold shutdown frequency.

13.7.3 This valve prevents backflow from the Reactor Coolant System to the Regenerative Heat Exchanger when it closes upon reversal of pressure/flow in the charging line to the Reactor Coolant System. The valve is located in the line between these two components.

13.7.4 This valve cannot be tested without closing HV9202. Exercising these valves during power operation would result in unnecessary thermal stress transients on the regenerative heat exchanger and reactor coolant system charging nozzles.

13.8 S2(3)1201MU021, Charging Line Check Valve to Reactor Coolant System Loop 1A

13.8.1 Test Requirement: OM-ISTC-3510, Active Category C check valves shall be exercised nominally every 3 months.

13.8.2 Alternate Testing: Test valve at cold shutdown frequency.

13.8.3 This valve prevents backflow from the Reactor Coolant System to the Regenerative Heat Exchanger when it closes upon reversal of pressure/flow in the charging line to the Reactor Coolant System. The valve is located in the line between these two components.

13.8.4 This valve cannot be tested without closing HV9203. Exercising these valves during power operation would result in unnecessary thermal stress transients on the regenerative heat exchanger and reactor coolant system charging nozzles.

13.9 S2(3)1201MU200, Pump 2(3)P016 Suction Check Valve,
S2(3)1201MU202, Pump 2(3)P015 Suction Check Valve

13.9.1 Test Requirement: OM-ISTC-3510, Active Category C check valves shall be exercised nominally every 3 months.

13.9.2 Alternate Testing: Test these valves at cold shutdown intervals.

13.9.3 These check valves provide flow into the suction of the respective LPSI pumps and prevent backflow from the pump into the lines from the RWST, etc.

Alternate Testing Justifications

13.9.4 These are check valves on the shutdown cooling (SDC) line to the LPSI pump suctions. The suction from this line comes from the RCS, on the hot leg injection line inside the first pressure isolation valve. The only flow path that would open these valves during plant operation would require taking suction from the RCS and pumping it into the RWST on miniflow, which is not practical. The only practical method of opening these valves is on shutdown cooling, and so the valves must be tested at cold shutdown intervals.

13.9.5 Closure of these valves is verified by measuring leakage past the valves. OM-ISTC-3522(a) states that open and close tests need only be performed at an interval when it is practicable to perform both tests. Since it is not possible to OPEN exercise test these valves at a quarterly interval, verifying the valve closed at a quarterly interval would not satisfy the code requirement to exercise the valve. Once the valve has been verified closed, there is no mechanism to open the valve once SDC is secured, and hence no benefit on re-verifying closure on a quarterly basis. Therefore, the interval for the CLOSE exercise test is set at the same interval as the OPEN exercise test.

13.10 S2(3)1201MU976, Check Valve Pressurizer Spray Line from Reactor Coolant Loop 1A
S2(3)1201MU977, Check Valve Pressurizer Spray Line from Reactor Coolant Loop 1B

13.10.1 Test Requirement: OM-ISTC-3510, Active Category C check valves shall be exercised nominally every 3 months.

13.10.2 Alternate Testing: Test valve at cold shutdown frequency with the Reactor Coolant Pumps secured.

13.10.3 During normal plant operation the valves open to allow pressurizer spray flow. Valves are held partially open during normal operation by flow. To minimize thermal shock of the nozzles, the pressurizer spray control valves PV0100A & B provide about 2 gpm of continuous flow to maintain the pressurizer spray nozzles at approximately Reactor Coolant System cold leg temperature. Valves MU976 and MU977 must close to prevent flow diversion back to the Reactor Coolant System from the Chemical & Volume Control System should PV0100A fail to close. AOI (Abnormal Operating Instruction) SO23-13-2 directs charging pump discharge to the Chemical and Volume Control System auxiliary pressurizer spray line instead of the normal pressurizer spray path through PV0100A and PV0100B. If these valves were to stick open, it would bypass this auxiliary spray flow to the Reactor Coolant System and disable the spray function in the pressurizer.

Alternate Testing Justifications

13.10.4 During normal plant operation, Reactor Coolant System pressure is maintained via pressurizer spray with flow through these valves. To CLOSE stroke MU976 and MU977 would require closing the upstream pressurizer spray control valve and isolating the pressurizer spray line.

13.10.5 CLOSE stroke tests can only be performed at cold shutdown with the Reactor Coolant Pumps secured.

14.0 RESP. & SERVICE AIR SYSTEM

14.1 2(3)HV5388, Containment Isolation Valve - Instrument Air

14.1.1 Test Requirement: OM-ISTC-3510, Active Category A valves shall be exercised nominally every 3 months.

14.1.2 Alternate Testing: Test this valve at cold shutdown intervals.

14.1.3 This valve provides isolation for the penetration that conveys instrument air into the containment building.

14.1.4 Exercising this valve during plant power operation isolates instrument air to the Containment and could result in a plant shutdown.

14.2 S2(3)2417MU016, Instrument Air Containment Isolation Check - Inside Containment

14.2.1 Test Requirement: OM-ISTC-3510, Active Category AC check valves shall be exercised nominally every 3 months.

14.2.2 Alternate Testing: Test this valve at refueling intervals.

14.2.3 This valve provides isolation for the penetration that conveys instrument air into the containment building.

14.2.4 There is no way to place a back pressure on this valve without losing control of the Safety Injection Tank Drain Valves, hence this valve can only be tested when SIT Tanks are not required (i.e., Modes 5 and 6).

Alternate Testing Justifications

15.0 SAFETY INJECTION

15.1 **2(3)HV8152,** Isolation Valve - Shutdown Cooling System Heat Exchanger E004 Inlet,
2(3)HV8153, Isolation Valve - Shutdown Cooling System Heat Exchanger E003 Inlet

15.1.1 Test Requirement: OM-ISTC-3510, Active Category B valves shall be exercised nominally every 3 months.

15.1.2 Alternate Testing: Test these valves at cold shutdown intervals.

15.1.3 2(3)HV8152 and 2(3)HV8153 are in the Shutdown Cooling System (SDCS). They are employed in directing SDCS flow into the SDCS heat exchanger.

15.1.4 For ECCS system operability, Technical Specification Surveillance SR 3.5.2.1 require verification at least once per twelve hours that these valves are closed and power to the valve operators is removed.

15.1.5 Testing these valves at a cold shutdown interval is consistent with NUREG 1482, Para. 3.1.1. Removing these valves from power lockout, restoring power and repositioning them in Modes 1, 2 or 3 involves a hardship; i.e., repositioning of a breaker from "off" to "on" (and closing the manual isolation valves for HV8152 and HV8153). Manual action would be required to restore the ECCS if an accident occurred while the test was in progress.

15.1.6 This risk outweighs the benefits achieved with a quarterly test in light of the facts that (1) these valves are in the idle shutdown cooling loops that are not used except when the plant is placed in cold shutdown, (2) being in power lockout, these valves have a minimal probability of failure. They are idle (potential sources of failure are very limited), and, (3) the realignment of the system for the exercise tests in question invalidates the assumptions in the Safety Analysis (see the Technical Specification Bases, B 3.5.2).

15.2 **2(3)HV9420,** Control Valve - HPSI Header #1 to Reactor Coolant System Loop 2 Hot Leg,
2(3)HV9434, Control Valve - HPSI Header #2 to Reactor Coolant System Loop 1 Hot Leg

15.2.1 Test Requirement: OM-ISTC-3510, Active Category A valves shall be exercised nominally every 3 months.

15.2.2 Alternate Testing: Test these valves at cold shutdown intervals.

Alternate Testing Justifications

15.2.3 For ECCS system operability, Technical Specifications Surveillance SR 3.5.2.1 requires verification at least once per twelve hours that these valves are in their required position, and power to the valve operators is removed.

15.2.4 Testing these valves at a cold shutdown interval is consistent with NUREG 1482, Para. 3.1.1. Removing these valves from power lockout, restoring power and repositioning them in Modes 1, 2 or 3 involves a hardship; i.e., repositioning of a breaker from "off" to "on". Manual action would be required to restore the ECCS if an accident occurred while the test was in progress.

15.2.5 This risk outweighs the benefits achieved with a quarterly test in light of the facts that; (1) being in power lockout, these valves have a minimal probability of failure. They are idle (potential sources of failure are very limited); and, (2) the realignment of the system for the exercise tests in question invalidates the assumptions in the Safety Analysis (see the Technical Specification Bases, Section B 3.5.2).

15.3 **2(3)HV0396,** Flow Control Valve - LPSI Pumps to Shutdown Cooling System
2(3)HV8160, Flow Control Valve - Shutdown Cooling System Heat Exchanger Bypass,
2(3)HV8161, Block Valve - Shutdown Cooling System Heat Exchanger Bypass to LPSI,

15.3.1 Test Requirement: OM-ISTC-3510, Active Category B valves shall be exercised nominally every 3 months.

15.3.2 Alternate Testing: Test these valves at cold shutdown intervals.

15.3.3 These valves are used in establishing and controlling the flow path when the Shutdown Cooling System is in operation and the plant is shutdown.

15.3.4 For ECCS system operability, Technical Specifications Surveillance SR 3.5.2.1 requires verification at least once per twelve hours that these valves are in their required position, and power to the valve operators is removed.

15.3.5 Testing these valves at a cold shutdown interval is consistent with NUREG 1482, Para. 3.1.1. Removing these valves from power lockout, restoring power and repositioning them in Modes 1, 2 or 3 involves a hardship; i.e., repositioning of a breaker from "off" to "on". Manual action would be required to restore the ECCS if an accident occurred while the test was in progress.

Alternate Testing Justifications

15.3.6 This risk outweighs the benefits achieved with a quarterly test in light of the facts that; (1) being in power lockout, these valves have a minimal probability of failure. They are idle (potential sources of failure are very limited); and, (2) the realignment of the system for the exercise tests in question invalidates the assumptions in the Safety Analysis (see the Technical Specification Bases, Section B 3.5.2).

15.3.7 Also, with regard to 2(3)HV8160 and 2(3)HV8161, being in the common LPSI header, repositioning either of these valves also renders both trains of LPSI inoperable since they are in the common discharge line for the LPSI system. Because of this loss of system function, 2(3)HV8160 and 2(3)HV8161 are excluded from quarterly testing consistent with the guidance in NUREG 1482, Para. 3.1.1(1).

15.4 INTENTIONALLY LEFT BLANK

15.5

2(3)HV9337,	Isolation Valve - Shutdown Cooling System to LPSI Pump Suction
2(3)HV9339,	Isolation Valve - Shutdown Cooling System from Reactor Coolant System Loop 2
2(3)HV9377,	Shutdown Cooling System Bypass to LPSI Suction Isolation
2(3)HV9378,	Shutdown Cooling System Bypass to LPSI Suction Isolation

15.5.1 Test Requirement: OM-ISTC-3510, Active Category A valves shall be exercised nominally every 3 months.

15.5.2 Alternate Testing: Test these valves at cold shutdown intervals.

15.5.3 These valves are used in establishing the Shutdown Cooling System flow path when the plant is shutdown.

15.5.4 These valves are required by LCS SR 3.5.101.1 to be interlocked to prevent opening whenever reactor coolant system pressure is greater than or equal to 380 psia.

15.6

2(3)HV9340,	Safety Injection Tank T008 Outlet Valve to Reactor Coolant System Loop 1A,
2(3)HV9350,	Safety Injection Tank T007 Outlet Valve to Reactor Coolant System Loop 1B,
2(3)HV9360,	Safety Injection Tank T009 Outlet Valve to Reactor Coolant System Loop 2A,
2(3)HV9370,	Safety Injection Tank T010 Outlet Valve to Reactor Coolant System Loop 2B

15.6.1 Test Requirement: OM-ISTC-3510, Active Category B valves shall be exercised nominally every 3 months.

Alternate Testing Justifications

15.6.2 Alternate Testing: Test these valves at cold shutdown intervals.

15.6.3 These valves block the discharge path of the Safety Injection Tanks into the Reactor Coolant System when closed.

15.6.4 For SIT operability, Technical Specification Surveillance SR 3.5.1.1 requires verification at least once per twelve hours that these valves are fully open and verification at least once every 31 days that power to the valve operators is removed.

15.6.5 Testing these valves at cold shutdown interval is consistant with NUREG 1482, Para. 3.1.1 since these valves are non-redundant valves in the Accumulator (SIT) discharge lines to the RCS.

15.7 INTENTIONALLY LEFT BLANK

15.8 2(3)HV9345, Safety Injection Tank T008 Vent Valve,
2(3)HV9355, Safety Injection Tank T007 Vent Valve,
2(3)HV9365, Safety Injection Tank T009 Vent Valve,
2(3)HV9375, Safety Injection Tank T010 Vent Valve

15.8.1 Test Requirement: OM-ISTC-3510, Active Category B valves shall be exercised nominally every 3 months.

15.8.2 Alternate Testing: Test these valves at cold shutdown intervals.

15.8.3 These valves provide a means of depressurizing the Safety Injection Tanks.

15.8.4 During power operation, LCS SR 3.5.100.1 requires power to be locked out for these valves. This prevents inadvertent depressurization of the Safety Injection Tanks.

15.9 2(3)HV9353, Shutdown Cooling Warm-Up valve
2(3)HV9359, Shutdown Cooling Warm-Up valve

15.9.1 Test Requirement: OM-ISTC-3510, Active Category B valves shall be exercised nominally every 3 months.

15.9.2 Alternate Testing: Test these valves at cold shutdown frequency when shutdown cooling is placed in service.

15.9.3 These valves are normally closed during plant operation and are used to regulate the amount of water that bypasses the core to limit cooldown. These valves are credited as active components in the FSAR but are not required to open in order to bring the plant to a safe shutdown according to the Failure Modes and Effects Analysis (FMEA) in the FSAR.

Alternate Testing Justifications

15.9.4 These valves are closed during plant operation and are placed in service when shutdown cooling is required. To stroke these valves open during normal plant operation would required entry into a 1 hour ACTION statement under Technical Specification 3.5.2. This is because both trains of LPSI are put out of service for this stroke. Opening these valves will cause Safety Injection flow diversion from Reactor Coolant System Loop 2A back to LPSI pump suction.

15.9.5 For ECCS system operability, Technical Specifications Surveillance SR 3.5.2.1 requires verification at least once per twelve hours that these valves are closed and power to the valve operators is removed.

15.9.6 Testing these valves at a cold shutdown interval is consistent with NUREG 1482, Para. 3.1.1. Removing these valves from power lockout, restoring power and repositioning them in Modes 1, 2 or 3 involves a hardship; i.e., repositioning of a breaker from "off" to "on". Manual action would be required to restore the ECCS if an accident occurred while the test was in progress.

15.9.7 This risk outweighs the benefits achieved with a quarterly test in light of the facts that; (1) being in power lockout, these valves have a minimal probability of failure. They are idle (potential sources of failure are very limited); and, (2) the realignment of the system for the exercise tests in question invalidates the assumptions in the Safety Analysis (see the Technical Specification Bases, Section B 3.5.2).

15.10 S2(3)1204MU001, RWST 2(3)T005 to Spray Pump 2(3)P012 Suction Header
S2(3)1204MU002, RWST 2(3)T006 to Spray Pump 2(3)P013 Suction Header

15.10.1 Test Requirement: OM-ISTC-3510, Active Category C check valves shall be exercised nominally every 3 months.

15.10.2 Alternate Testing: Quarterly, perform a partial stroke test (OPEN) of each valve using system flow. At each refueling outage, test the valves by partial disassembly, inspection and manual stroking on a rotating basis (one valve per refueling).

15.10.3 During partial disassembly, the valves' internals will be visually inspected for worn or corroded parts, and the valves' disk will be manually exercised. If it is found the full stroke capability of the disassembled valve is in question, the remaining valves in the group will be similarly disassembled and inspected and manually full stroked during the same outage in the case of the valve in the unit undergoing refueling and at the very next refueling outage for the valves in the opposite unit. Following reassembly, the valve will be tested by partial stroking using system flow.

Alternate Testing Justifications

15.10.4 These valves prevent back-flow from the High Pressure Safety Injection Suction Header, Low Pressure Safety Injection Suction Header and Spray Pump Suction header to the Refueling Water Storage Tanks (RWSTs).

15.10.5 INTRODUCTION

.1 The source of flow to these valves is borated water from the RWSTs. Pumps that produce flow through these valves are the High pressure Safety Injection (HPSI), Low Pressure Safety Injection (LPSI) and Containment Spray pumps. They discharge into the Reactor Coolant System (Reactor Coolant System) or containment building spray headers.

.2 These safety injection system check valves prevent post accident recirculation flow from escaping the normal flow path into the RWST. Plant conditions can be grouped into three test situations with respect to these valves:

(1) Reactor Coolant System Pressurized and at normal operating temperature,
(2) Reactor Coolant System depressurized and cooled down, and,
(3) Reactor Coolant System open during refueling. These conditions are discussed below.

.3 REACTOR COOLANT SYSTEM PRESSURIZED AND AT NORMAL OPERATING TEMPERATURE

These valves cannot be full-stroked using flow during power operation, for the following reasons:

a. The HPSI and LPSI pumps are unable to overcome Reactor Coolant System pressure. There is no full flow recirculation to the RWST from either pump.

As a result, only pump recirculation through the miniflow line is produced using these pumps while the Reactor Coolant System is pressurized. Although this is sufficient for a partial stroke test, flow for a full-stroke test is not available.

Alternate Testing Justifications

15.10.5.3 (continued)

b. A quarterly test at power, using the only available flow path, would either inject borated water into the Reactor Coolant System or spray down the containment building, or both. If injection were possible during operation, the test would not be performed because the result would be an immediate, uncontrolled and complete reactor shutdown (as a result of the borated water) and/or flooding and resultant degradation of the components and systems located in the containment building (as a result of the containment building spray down).

c. The containment spray pumps cannot be utilized to full-stroke these valves using flow, as the only full flow path during plant operation is through the containment spray header and nozzles.

.4 REACTOR COOLANT SYSTEM DEPRESSURIZED AND COOLED DOWN

These valves cannot be full-stroked using flow during cold shutdown for the following reasons:

a. TESTING WITH ALL PUMPS IN A LOOP: Sufficient flow to full-stroke the RWST outlet check valves is not achievable in this condition. Return flow from the HPSI and LPSI pump discharge lines is very limited, consisting of mini-flow recirculation lines and Reactor Coolant System vent lines.

b. TESTING WITH THE CONTAINMENT SPRAY PUMP: The containment Spray (CS) pumps have a 6" recirculation line to the RWSTs, but these pumps by themselves cannot develop full-stroke flow for the RWST outlet check valves.

c. TESTING WITH THE LPSI PUMPS: Stroking the RWST outlet check valves with flow from the LPSI pumps is impractical because it would interfere with SDC alignments. Additionally, LPSI flow by itself would not provide full accident flow through these valves, and there is no path to allow full accident flow.

Alternate Testing Justifications

15.10.5.4 (continued)

d. TESTING WITH THE HPSI PUMPS: The equivalent of the combined Containment Spray, LPSI, and HPSI flow rate cannot be developed with the HPSI pump alone. The HPSI pumps cannot be used to exercise these valves during cold shutdown because of the risk of exceeding cooldown rate limits. The borated water in the RWST is normally at an ambient temperature of ≈ 65°F and the cooled down Reactor Coolant System is nominally at ≈ 135°F.

e. CONCLUSION: The Code required testing of the RWST outlet check valves while the plant is in Cold Shutdown could only be performed after significant redesign of the system, such as the addition of an instrumented full flow test line.

.5 REACTOR COOLANT SYSTEM OPEN DURING REFUELING

a. FLOW PATH:

The RWST outlet check valves are in the 24" supply line to the suction headers of the HPSI, LPSI and Containment Spray Pumps. To full-stroke the RWST outlet check valves using flow during refueling with the Reactor Vessel head removed, would require that the system achieve a test flow of approximately 6500 gpm (full accident flow). There is one check valve for each of the two trains of pumps. Full flow from the RWST through the check valves of interest is only achieved with all of the pumps in one train running at the same time (one HPSI pump, one LPSI pump and one Spray pump).

A large flow could be achieved in the refueling mode during refueling cavity fill. The HPSI, LPSI and containment Spray pumps could take a suction from the RWST and discharge to the Reactor Coolant System. With the Reactor Pressure Vessel head removed, flow would first fill and then overflow the Reactor Pressure Vessel into the Refueling Cavity.

Alternate Testing Justifications

15.10.5.5 (continued)

b. COOLDOWN LIMITS:

The only discharge path that exists for this flow is into the core through the safety injection headers to the cold legs and/or the 6" recirculation line from the Containment Spray pump discharge to the RWST (this 6" line alone has insufficient capacity for the full-stroke of the RWST outlet check valves using flow). The borated water in the RWST is normally at an ambient temperature of ≈ 65°F and the Cooled down Reactor Coolant System is nominally at ≈ 135°F.

Injection of the borated RWST water could result in a cool-down rate in violation of the Technical Specifications LCO 3.4.3 for the reactor vessel.

15.10.6 CONCLUSION

.1 From the above discussion, it can be seen that no allowable flow path exists in any plant mode for a full-stroke of the RWST outlet check valves using flow. Testing of these valves could only be accomplished after significant redesign of the system, such as installation of a fully instrumented full flow test loop. OM-ISTC-5221(c) identifies partial disassembly and inspection as an acceptable alternative for stroking a valve when it is impractical to use flow. In this case, there is no way to stroke these valves with the existing system design using flow.

.2 Non-intrusive techniques have been considered. However, because a flow path cannot be constructed which will fully stroke the valves, there is no non-intrusive technique such as magnetics or acoustics that can be utilized to verify the valves achieve full stroke capability. Although it is conceivable radiography could be utilized to verify closure, the valve must be disassembled anyway to verify the open capability, and so there is no additional value in verifying closure through non-intrusive techniques.

Alternate Testing Justifications

15.10.7 TEST SCHEDULE

.1 To disassemble and inspect all four of these valves each refueling outage requires the associated piping to be drained. This generates a significant amount of liquid radioactive waste. In addition, considerable radiation exposure can be received by personnel performing the partial disassembly, hand stroking and inspection. As a consequence, there is a clear advantage in reducing the number of partial disassembly and hand stroking tests required in each refueling.

.2 OM-ISTC-5221(c) allows that a valve may be disassembled as an alternative to full flow testing Following reassembly, the valve will be tested by partial stroking using system flow.

.3 OM-ISTC-5221(c) allows development of staggered testing of like components by establishing an inspection plan for similar groups of valves. Disassembly and inspection is performed in accordance with, and does not deviate from OM-ISTC-5221(c).

15.11 S2(3)1204MU003, Outlet Check Valve - Containment Emergency Sump
S2(3)1204MU004, Outlet Check Valve - Containment Emergency Sump

15.11.1 Test Requirement: OM-ISTC-3510, Active Category C check valves shall be exercised nominally every 3 months.

15.11.2 Alternate Testing: The valves will be partially disassembled, inspected and manually full stroked at each refueling outage on a rotating basis (one valve per refueling).

.1 During partial disassembly, the valves' internals will be visually inspected for worn or corroded parts, and the valves' disk will be manually exercised.

.2 If it is found full stroke capability of the disassembled valve is in question, the remaining valves in the group will be similarly disassembled and inspected and manually full stroked during the same outage in the case of the valve in the unit undergoing refueling and at the very next refueling outage for the valves in the opposite unit.

15.11.3 Following reassembly, the valve will be tested by partial stroking using system flow.

15.11.4 These valves open to provide recirculation flow from the containment sump to the suction piping of the HPSI, LPSI and Containment Spray pumps.

Alternate Testing Justifications

15.11.5 Test Methodology

.1 NORMAL PLANT OPERATION

The only source of water to the inlet of the containment sump outlet check valves is the containment building sump. During normal plant operation this sump is required to be kept dry and the isolation valves shut. This system lineup precludes either full-stroke or partial stroke of these check valves using flow in this mode.

.2 COLD SHUTDOWN AND REFUELING MODES

In cold shutdown or reactor refueling modes, part stroke exercising of these valves is possible with flow from the containment sump.

.3 CONCLUSION

The Code required testing could only be performed after significant system modifications involving considerable costs. These system modifications would involve additional containment penetrations and long runs of large diameter piping with associated supports and isolation valves. OM-ISTC-5221(c) identifies partial disassembly and inspection as an acceptable alternative for stroking a valve when it is impractical to use flow. In this case, there is no practical way to full-stroke these check valves using flow with the existing system design.

Non-intrusive techniques have been considered. However, because a flow path cannot be constructed which will fully stroke the valves, there is no non-intrusive technique such as magnetics or acoustics that can be utilized to verify the valves achieve full stroke capability. Although it is conceivable radiography could be utilized to verify closure, the valve must be disassembled anyway to verify the open capability, and so there is no additional value in verifying closure through non-intrusive techniques.

Alternate Testing Justifications

15.11.5 (continued)

.4 TEST SCHEDULE

To disassemble and inspect all four of these valves each refueling outage requires the associated system piping to be drained. This generates a significant amount of liquid radioactive waste. In addition, considerable radiation exposure can be received by personnel performing the partial disassembly, hand stroking and inspection. As a consequence, there is a clear advantage in reducing the number of these tests required in each refueling.OM-ISTC-5221(c) allows that a valve may be disassembled as an alternative to full flow testing. Following reassembly, the valve will be tested by partial stroking using system flow.

OM-ISTC-5221(c) allows development of staggered testing of like components by establishing an inspection plan for similar groups of valves. Disassembly and inspection is performed in accordance with, and does not deviate from OM-ISTC-5221(c).

15.12 **S2(3)1204MU006,** HPSI Pumps 2(3)P017 and 2(3)P018 Suction Check Valve
S2(3)1204MU008, HPSI Pumps 2(3)P018 and 2(3)P019 Suction Check Valve

15.12.1 Test Requirement: OM-ISTC-3510, Active Category C check valves shall be exercised nominally every 3 months.

15.12.2 Alternate Testing: These valves will be full stroke exercised at each refueling, while using the high pressure safety injection pumps to fill the refueling pool canal, and part stroke exercised quarterly during routine inservice testing of the HPSI pumps.

15.12.3 These valves open to allow a flow of water into the suction piping of the high pressure safety injection pumps.

15.12.4 These check valves cannot be full stroke exercised during power operations because the high pressure safety injection pumps cannot overcome reactor coolant system pressure. During cold shutdown full stroke exercising these valves could result in a low temperature over-pressurization of the reactor coolant system.

Alternate Testing Justifications

15.13 **S2(3)1204MU012,** HPSI Pump 2(3)P017 Discharge Check Valve,
S2(3)1204MU015, HPSI Pump 2(3)P019 Discharge Check Valve,
S2(3)1204MU016, HPSI Pump 2(3)P018 Discharge Check Valve
S2(3)1204MU017, HPSI Pumps 2(3)P018 & 2(3)P019 to #2 High Pressure Header,

15.13.1 Test Requirement: OM-ISTC-3510, Active Category C check valves shall be exercised nominally every 3 months.

15.13.2 Alternate Testing: Test these valves at cold shutdown intervals.

15.13.3 These valves are in the flow path from HPSI directly to the RCS. The CVTO cannot be performed during operation because shutoff head of the HPSI pump is less than RCS pressure. Exercising the valves with full accident flow requires ~820 gpm, which is not possible during plant operation. There is no alternate flow path that will support the requisite flow rate during power operation.

15.13.4 The EXERCISE CLOSED test is also done at cold shutdown intervals. Closure of these valves is verified by measuring leakage past the valves or by non-intrusive methods. OM-ISTC-3522(a) states that open and close tests need only be performed at an interval when it is practicable to perform both tests. Since it is not possible to OPEN EXERCISE test these valves at a quarterly interval, verifying the valves closed at a quarterly interval would not satisfy the code requirement to exercise the valves. Therefore, the interval for the CLOSED EXERCISE test is set at the same interval as the OPEN EXERCISE test. Performing the CLOSED tests at Cold Shutdown intervals by measuring leakage or by non-intrusive methods is consistent with OM-ISTC-5221(a).

15.14 **S2(3)1204MU018,** HPSI Combined Header to Reactor Coolant System Loop 1A Check Valve,
S2(3)1204MU019, HPSI Combined Header to Reactor Coolant System Loop 1B Check Valve,
S2(3)1204MU020, HPSI Combined Header to Reactor Coolant System Loop 2A Check Valve,
S2(3)1204MU021, HPSI Combined Header to Reactor Coolant System Loop 2B Check Valve

15.14.1 Test Requirement: OM-ISTC-3510, Active Category AC check valves shall be exercised nominally every 3 months.

15.14.2 Alternate Testing: Test these valves at cold shutdown intervals.

15.14.3 These valves direct flow into the Reactor Coolant System from the HPSI pumps.

Alternate Testing Justifications

15.14.4 The EXERCISE OPEN test cannot be performed during operation because shutoff head of the HPSI and LPSI pumps are less than RCS pressure. During power operation there is no full flow path available to stroke test these valves.

15.14.5 The EXERCISE CLOSED test is also done at cold shutdown intervals. Closure of these valves is verified by measuring leakage past the valves. OM-ISTC-3522(a) states that open and close tests need only be performed at an interval when it is practicable to perform both tests. Since it is not possible to OPEN EXERCISE test these valves at a quarterly interval, verifying the valves closed at a quarterly interval would not satisfy the code requirement to exercise the valves. Therefore, the interval for the CLOSED EXERCISE test is set at the same interval as the OPEN EXERCISE test. Performing the CLOSED tests at Cold Shutdown intervals by measuring leakage is consistent with OM-ISTC-5221(a).

15.15 S2(3)1204MU024, LPSI Pump 2(3)P015 Discharge Stop Check Valve,
S2(3)1204MU025, LPSI Pump 2(3)P016 Discharge Stop Check Valve

15.15.1 Test Requirement: OM-ISTC-3510, Active Category C check valves shall be exercised nominally every 3 months.

15.15.2 Alternate Testing: Test these valves at cold shutdown intervals.

15.15.3 These valves are on the discharge of the LPSI pumps and prevent backflow through an idle LPSI pump in the event the other pump is operating.

15.15.4 These valves are in the flow path from LPSI directly to the RCS. The CVTO cannot be performed during operation because shutoff head of the LPSI pump is less than RCS pressure. Exercising the valves to the full open position requires a minimum of 4150 gpm, which is not available. There is no alternate flow path that will support the requisite flow rate during operation.

15.15.5 OM-ISTC-3522(a) states that open and close tests need only be performed at an interval when it is practicable to perform both tests. Since it is not possible to OPEN EXERCISE test these valves at a quarterly interval, verifying the valves closed at a quarterly interval would not satisfy the code requirement to exercise the valves. Therefore, the interval for the CLOSED EXERCISE test is set at the same interval as the OPEN EXERCISE test. Performing the CLOSED tests at Cold Shutdown intervals by measuring leakage is consistent with OM-ISTC-5221(a).

Alternate Testing Justifications

15.16 **S2(3)1204MU027,** Safety Injection Headers to Reactor Coolant System Loop 1A,
S2(3)1204MU029, Safety Injection Headers to Reactor Coolant System Loop 1B,
S2(3)1204MU031, Safety Injection Headers to Reactor Coolant System Loop 2A,
S2(3)1204MU033, Safety Injection Headers to Reactor Coolant System Loop 2B

15.16.1 Test Requirement: OM-ISTC-3510, Active Category AC check valves shall be exercised nominally every 3 months.

15.16.2 Alternate Testing: Test these valves open and closed at refueling intervals.

15.16.3 These valves direct flow into the Reactor Coolant System from the LPSI and HPSI pumps.

15.16.4 During power operation there is no full flow path available to stroke test these valves. LPSI or HPSI pumps cannot overcome the Reactor Coolant System pressure.

15.16.5 Full closure of the valves is ensured by leak testing the valves to the limits specified in Technical Specification Surveillance SR 3.4.14.1 after they have been exercised but prior to Mode 2.

15.16.6 These valves are open tested in conjunction with the SIT discharge check valves MU040-MU043, as described in Section 15.18.

15.17 **S2(3)1204MU034,** HPSI 2(3)P017 Miniflow
S2(3)1204MU035, HPSI 2(3)P019 Miniflow,
S2(3)1204MU036, HPSI 2(3)P018 Train "A" Miniflow,
S2(3)1204MU037, LPSI Pump 2(3)P015 Miniflow Stop Check Valve,
S2(3)1204MU063, LPSI Pump 2(3)P016 Miniflow Stop Check Valve,
S2(3)1204MU104, HPSI 2(3)P018 Train "B" Miniflow

15.17.1 Test Requirement: OM-ISTC-3510, Active Category C and AC check valves shall be exercised nominally every 3 months.

15.17.2 Alternate Testing: Test these valves at refueling intervals.

15.17.3 These stop-check valves direct miniflow recirculation from the HPSI, LPSI pumps back to the Refueling Water Storage Tanks.

15.17.4 Providing flow or pressure to verify completion of the closed stroke requires placing the miniflow line out of service for the HPSI, LPSI and Containment Spray Systems.

Alternate Testing Justifications

15.17.5 The only way to verify closure of these valves is to measure leakage into a test volume upstream of the check valves using a hydro pump. The elaborate valve line-up, test equipment required, and high man-hours required to perform this test make it impractical to perform on a more frequent basis. Performing the CLOSE test of these valves in conjunction with the LEAKAGE test at refueling intervals is consistent with OM-ISTC-5221(a).

15.17.6 OM-ISTC-3522(a) states that open and close tests need only be performed at an interval when it is practicable to perform both tests. Since it is not possible to CLOSE EXERCISE test these valves at a quarterly interval, verifying the valves open at a quarterly interval would not satisfy the code requirement to exercise the valves. Therefore, the interval for the OPEN EXERCISE test is set at the same interval as the CLOSED EXERCISE test.

15.18 S2(3)1204MU040, Safety Injection Tank T008 Outlet Check Valve
S2(3)1204MU041, Safety Injection Tank T007 Outlet Check Valve
S2(3)1204MU042, Safety Injection Tank T009 Outlet Check Valve
S2(3)1204MU043, Safety Injection Tank T010 Outlet Check Valve

15.18.1 Test Requirement: OM-ISTC-3510, Active Category AC check valves shall be exercised nominally every 3 months.

15.18.2 Alternate Testing: These valves will have stroke capability verified using non-intrusive (NI) testing at each refueling outage on a rotating basis in accordance with NUREG 1482, Section 4.1.2.

.1 This test utilizes a dump of the SITs to achieve the flow necessary to full stroke the valves, and magnetic and acoustic sensors to verify full open stroke of the obturator. This testing is done during filling of the refueling cavity. If problems are found with the sample valve that are determined to affect the operational readiness of the valve, all valves in the group must be tested using nonintrusive techniques during the same outage.

.2 If the NI testing does not provide adequate results, alternative techniques, including a determination of the "K-value" of the system, and/or a calculation of flow velocity through the valves calculated using changing tank levels, will be utilized to determine a successful stroke.

.3 The justification required for these alternative techniques (if necessary) is provided in Memorandum for File by P. Schofield, dated 3/31/95, subject: Justification of Alternate Testing of SIT Discharge Check Valves.

Alternate Testing Justifications

15.18.2 (continued)

.4 If the alternative techniques are also unsuccessful, disassembly and hand-stroking will be performed in accordance with OM-ISTC-5224.

15.18.3 Full closure of the valves is ensured by leak testing the valves to the limits specified in Technical Specification Surveillance SR 3.4.14.1 after they have been exercised but prior to Mode 2.

15.18.4 These valves open to allow a flow of water from the Safety Injection Tanks into the Safety Injection Header of each Primary loop. Opening these valves during power operation is not possible against normal Reactor Coolant System operating pressure.

15.19 S2(3)1204MU072, LPSI Check Valve to Reactor Coolant System Loop 1A,
S2(3)1204MU073, LPSI Check Valve to Reactor Coolant System Loop 1B,
S2(3)1204MU074, LPSI Check Valve to Reactor Coolant System Loop 2A,
S2(3)1204MU075, LPSI Check Valve to Reactor Coolant System Loop 2B

15.19.1 Test Requirement: OM-ISTC-3510, Active Category AC check valves shall be exercised nominally every 3 months.

15.19.2 Alternate Testing: Test these valves at cold shutdown intervals.

15.19.3 These check valves direct LPSI flow into the Reactor Coolant System whenever the Reactor Coolant System pressure drops below LPSI pump discharge pressure. There is no flow path to exercise these valves during power operation. LPSI pumps cannot overcome Reactor Coolant System Pressure while the plant is at power.

15.19.4 The only way to verify closure of these valves is to measure leakage into a test volume upstream of the check valves using a hydro pump. The elaborate valve line-up, test equipment required, and high man-hours required to perform this test make it impractical to perform on a more frequent basis. Performing the CLOSE test of these valves in conjunction with the LEAKAGE test at refueling intervals is consistent with OM-ISTC-5221(a).

15.19.5 OM-ISTC-3522(a) states that open and close tests need only be performed at an interval when it is practicable to perform both tests. Since it is not possible to CLOSE EXERCISE test these valves at a quarterly interval, verifying the valves open at a quarterly interval would not satisfy the code requirement to exercise the valves. Therefore, the interval for the OPEN EXERCISE test is set at the same interval as the CLOSED EXERCISE test.

Alternate Testing Justifications

15.20 **S2(3)1204MU077,** LPSI Pump 2(3)P016 Suction Header Check Valve
S2(3)1204MU084, LPSI Pump 2(3)P015 Suction Check Valve
S2(3)1204MU199, LPSI Pump 2(3)P016 Suction Header Check Valve
S2(3)1204MU201, LPSI Pump 2(3)P015 Suction Header Check Valve

15.20.1 Test Requirement: OM-ISTC-3510, Active Category C check valves shall be exercised nominally every 3 months.

15.20.2 Alternate Testing: Quarterly, part-stroke exercise these valves. Full stroke open exercise using flow at reactor refueling intervals.

15.20.3 A flow path exists during the filling of the refueling canal with the LPSI pumps in plant Mode 6 (refueling). The suction of the LPSI pumps can be aligned to the RWST and the discharge to the LPSI header or shutdown cooling header. Flow could then be directed through the LPSI Suction Header Check Valves at full flow (LPSI Pump Design Flow is 4150 gpm at 400 psid) for a short period of time sufficient to full-stroke these valves with flow.

15.20.4 These valves open to allow a flow of water from the refueling water storage tank (RWST) into the suction piping of the Low Pressure Safety Injection (LPSI) pumps.

15.20.5 The refueling interval for the Check Valve Stroke Test Closed is required due to the impracticability of erecting scaffolding and handling the heavy radiography apparatus in the vicinity of the Safety Injection equipment. The radiography is performed at refueling intervals on a rotating basis consistent with NUREG 1482 (Reference 2.5.3) Section 4.1.2.

15.20.6 DURING POWER OPERATION

.1 Full-stroke exercising of the LPSI pump suction check valves with flow requires the passage of the maximum required accident flow rate through the valves. The LPSI suction checks are in the suction lines of the associated LPSI pumps and deliver borated water to these pumps from the RWSTs. The pumps in turn discharge to the Reactor Coolant System, Shutdown Cooling heat exchanger and the mini-flow recirculation lines (returning the flow to the RWSTs).

Alternate Testing Justifications

15.20.6 (continued)

.2 These valves cannot be full-stroke exercised using flow during power operation, for the following reasons:

a. The mini-flow recirculation lines cannot provide enough flow through the LPSI pump suction check valves, as the maximum flow achievable through this path is less than required accident flow. Although this is sufficient for a partial stroke test, flow for a full-stroke is not available.

b. During power operation, the Shutdown Cooling System is isolated and cannot be used as a flow path because it must remain isolated due to interlocks controlled by LCS SR 3.5.101.1.

c. Injecting water into the Reactor Coolant System during power operation is not possible. The Low Pressure Safety Injection (LPSI) pumps are unable to overcome Reactor Coolant System pressure and therefore there can be no flow into the Reactor Coolant System in this plant mode. If a test at power could be conducted, it would result in injection of borated water into the Reactor Coolant System. The result would be an immediate, uncontrolled and complete reactor shutdown.

15.20.7 COLD SHUTDOWN

.1 Full-stroke exercising these valves at cold shutdown is impractical because it would interfere with SDC requirements, and there is no flow path available to fully open these valves.

.2 This requirement is met by performing a partial stroke quarterly during operation and a full stroke during refueling outages.

15.21 S2(3)1204MU087, Spray Pump 2(3)P013 Suction Check Valve,
S2(3)1204MU088, Spray Pump 2(3)P012 Suction Check Valve

15.21.1 Test Requirement: OM-ISTC-3510, Active Category C check valves shall be exercised nominally every 3 months.

15.21.2 Alternate Testing: Test these valves at cold shutdown intervals.

15.21.3 These valves are in the flow path of the Containment Spray Pumps.

15.21.4 No flow path exists to exercise these valves to the open position during plant operation without removing both trains of Containment Spray and LPSI from service.

Alternate Testing Justifications

15.22 **S2(3)1204MU152,** HPSI Header #2 to Reactor Coolant System Loop 1 Hot Leg,
S2(3)1204MU155, HPSI Header #1 to Reactor Coolant System Loop 2 Hot Leg,
S2(3)1204MU156, HPSI Header #1 to Reactor Coolant System Loop 2 Hot Leg Inlet Check Valve,
S2(3)1204MU157, HPSI Header #2 to Reactor Coolant System Loop 1 Hot Leg,
S2(3)1204MU158, HPSI Header #1 to Reactor Coolant System Loop 2 Hot Leg

15.22.1 Test Requirement: OM-ISTC-3510, Active Category AC and C check valves shall be exercised nominally every 3 months.

15.22.2 Alternate Testing: Test these valves at cold shutdown intervals.

15.22.3 These valves direct flow from the discharge of the HPSI headers into the Reactor Coolant System Hot legs.

15.22.4 Valves cannot be stroked at power because the HPSI pumps cannot overcome Reactor Coolant System Pressure.

15.23 **S2(3)1204MU195**, Check Valve Nitrogen Supply To SIT T008,
S2(3)1204MU196, Check Valve Nitrogen Supply To SIT T007,
S2(3)1204MU197, Check Valve Nitrogen Supply To SIT T009,
S2(3)1204MU198, Check Valve Nitrogen Supply To SIT T010,

15.23.1 Test Requirement: OM-ISTC-3510, Active Category C check valves shall be exercised nominally every 3 months.

15.23.2 Alternate Testing: Test these valves at cold shutdown.

15.23.3 These check valves provide nitrogen gas pressure boundary and a flow path for pressurizing the Safety Injection Tanks.

15.23.4 Test method for these check valves requires a containment entry and disables the nitrogen supply flow path to all four Safety Injection Tanks. During power operation, the containment entry to establish the valve alignment for the test would be impracticable on a quarterly interval and follows the guidance of NUREG 1482, (ref. 2.5.3) Sections 3.1.1 and 4.1.4.

Alternate Testing Justifications

16.0 STEAM

16.1 INTENTIONALLY LEFT BLANK

16.2 2(3)HV8204, Steam Generator E089 Main Steam Isolation Valve
2(3)HV8205, Steam Generator E088 Main Steam Isolation Valve

16.2.1 Test Requirement: OM-ISTC-3510, Active Category B valves shall be exercised nominally every 3 months.

16.2.2 Alternate Testing: Perform a full stroke close test at cold shutdown.

16.2.3 These valves isolate the main steam leads coming out of the containment from the steam generators and going into the steam plant.

16.2.4 Close on Main Steam Isolation Signal (MSIS).

16.2.5 Full stroke exercising at full plant power would cause a loss of 50% of heat removal from the primary coolant system, a reactor trip on asymmetric power in the core and actuation of the steam and pressurizer (primary) reliefs.

16.2.6 The MSIVs must be open during power operation. Closure of one or both of the MSIVs during power operation will result in a reactor trip. A partial stroke test could result in an inadvertent closure of an MSIV and a reactor trip.

16.2.7 SCE performed a Probabilistic Risk Assessment (PRE 1-91-22) of the partial stroke test of the MSIVs and determined the risk to the health and safety of the public is reduced by approximately an order of magnitude by eliminating the quarterly partial stroke test of the MSIVs during power operation. The calculated offsite dose impact from inadvertent closure of an MSIV during the partial stroke testing is estimated to be 0.5 man-rem per year. The calculated offsite dose from failure of an MSIV to close during an accident due to eliminating the partial stroke testing is estimated to be 0.045 to 0.075 man-rem per year. As a result, the part stroke test during power operation is not performed. This is consistent with NUREG 1482, Section 4.2.4.

Alternate Testing Justifications

16.3 INTENTIONALLY LEFT BLANK

16.4 **2(3)PCV8463,** Nitrogen Supply to Main Steam Dump Valve HV8419
2(3)PCV8465, Nitrogen Supply to Main Steam Dump Valve HV8421

16.4.1 Test Requirement: OM-ISTC-3510, Active Category B valves shall be exercised nominally every 3 months.

16.4.2 Alternate Testing: Test at cold shutdown intervals in conjunction with the testing of the associated ADV.

16.4.3 These valves open to maintain pressure in their respective ADV actuator nitrogen supply header upon loss of instrument air. These valves are normally closed since the downstream air pressure is maintained above 100 psig and the regulator valve is set at 80 psig. Nitrogen backup is required for small break LOCA when manual operation of the ADV is not possible. These valves are designed to fail open.

16.4.4 These valves are not Code valves, however, they have been included in the IST program to assure functionality. The analysis in 90055 requires only certain tests for these valves. The stroke time of these control valves verifies the open stroke. These valves are open stroked during IST of the ADVs at cold shutdown intervals. Therefore the practical test frequency is cold shutdown in conjunction with the ADV IST.

16.5 INTENTIONALLY LEFT BLANK

16.6 INTENTIONALLY LEFT BLANK

16.7 **S2(3)1301MU003,** Steam Supply - S/G E088 to AFP Turbine K007 Check Valve
S2(3)1301MU005, Steam Supply - S/G E089 to AFP Turbine K007 Check Valve

16.7.1 Test Requirement: OM-ISTC-3510, Active Category C check valves shall be exercised nominally every 3 months.

16.7.2 Alternate Testing: Refueling interval, test each valve by partial disassembly, inspection and manual stroking.

16.7.3 On alternating quarters, the PMF of the steam-driven AFW pump MP140 will verify that one check valve remains open using system steam flow. During the next quarterly pump test, HV8200 or HV8201 will be closed to verify flow through the redundant steam supply check valve.

Alternate Testing Justifications

16.7.4 During partial disassembly, the valves' internals will be visually inspected for worn or corroded parts, and the valves' disks shall be manually exercised. Following reassembly and prior to return to service (Tech. Spec. Operable), the valves will be verified open using system steam flow during the AFW MP140 mini-flow test (PMF) when the system is returned to service. If it is found that the full stroke capability of the disassembled valve is in question, the other valve will be similarly disassembled and inspected and manually full stroked during the same outage.

16.7.5 The use of non-intrusive test techniques are not presently useful for this type of in-line nozzle-check design where the disk normally held in open position and closes only under reverse flow conditions.

16.7.6 These valves are in the main steam supply to the turbine-driven auxiliary feedwater pump. In the event of a main steam line break, these valves close to isolate the opposite steam generator.

16.7.7 DURING PLANT OPERATION

.1 During normal plant operation, main steam pressure tends to open these valves. No pressure source exists to reverse this pressure in the steam line where these valves are located and allow detection of valve closure or valve leakage. Consequently, with the present system design, verifying the closure of the AFP Steam Supply check valves by leak testing or with reverse flow, while the plant is operating, is not practical. Although a temporary external pressure source could be connected to the down-stream piping and apply reverse pressure to these check valves, the required valve lineup would cause the associated auxiliary feedwater pump to be inoperable during the test.

16.7.8 DURING COLD SHUTDOWN OR REFUELING MODES

.1 Regardless of plant mode, there is no positive means of verifying that the valve disc travels to the closed position, with the possible exception of non-intrusive testing techniques. System connections, such as vents and drains (and appropriate line isolation valves), are not present in the system to allow verification of the existence of a pressure differential across the AFP Steam Supply check valves when they are in the closed position.

Alternate Testing Justifications

16.7.9 CONCLUSION

.1 OM-ISTC-5221(c) identifies partial disassembly and inspection as an acceptable alternative for stroking a valve when it is impractical to use flow. With the possible exception of non-intrusive testing techniques, there is no way to test these check valves closed with the existing system design using reverse flow or pressure. Testing of these valves could only be accomplished after significant redesign of the system, such as installation of additional isolation valves and appropriate vents and drains in the high pressure steam piping. The high costs of the necessary design changes involved would not be justified by the improvement of the valve testing. Further, the addition of valves, supports and necessary piping modifications could result in reduced plant reliability.

16.7.10 TEST SCHEDULE

.1 OM-ISTC-5221(c) allows that a valve may be disassembled as an alternative to full flow testing.

.2 OM-ISTC-5221(c) allows development of staggered testing of like components by establishing an inspection plan for similar groups of valves.

.3 Disassembly and inspection is performed in accordance with, and does not deviate from OM-ISTC-5221(c).

17.0 INTENTIONALLY LEFT BLANK

18.0 DIESEL GENERATOR VALVE TESTING

18.1 **S2(3)2420MU127,** DG Gov Air Boost 3-way Valve
S2(3)2420MU137, DG Gov Air Boost 3-way Valve
S2(3)2420MU139, DG Gov Air Boost 3-way Valve
S2(3)2420MU157, DG Gov Air Boost 3-way Valve

18.1.1 Test Requirement: OM-ISTC-3510, Active Category C check valves shall be exercised nominally every 3 months.

18.1.2 Alternate Testing: The valves will be replaced during each Diesel Generator overhaul outage with pretested valves. The frequency of the overhauls is every 4 years.

18.1.3 The replacement valves are subject to inspection and manual full stroke prior to installation. The valves which are removed from the system are kept for IST evaluation.

Alternate Testing Justifications

18.1.4 Diesel Generator surveillance run following the overhaul serves as post-maintenance testing for the newly installed pretested valves.

18.1.5 These shuttle valves direct air flow to the governor booster from either of the redundant start air circuits to position the fuel racks for a Fast Start (10 sec) of the engine. Additionally, the shuttle valve seals off the low pressure (potentially failed) start air circuit from the active start air circuit.

18.1.6 Test Methodology

.1 NORMAL PLANT OPERATION

During normal plant operation, TS surveillance runs of the Diesel Generator demonstrate that these valves, as a group, are performing their function. However, there are no measurable parameters for either the CVTO or CVTC which can definitively verify adequate operation. Additionally, the redundant nature of the DG air start system design precludes determining whether an individual valve function has degraded.

.2 OVERHAUL MODES

During Diesel Generator overhaul, stroke exercising of these valves could be possible with flow with temporary modifications to test these valves in place; however, such testing would be more labor intensive than replacement with pretested valves each overhaul. Diesel Generator overhauls are performed during plant operation.

18.1.7 CONCLUSION

.1 The Code required testing could only be performed after significant system modifications involving considerable costs. OM-ISTC-5221(c) identifies partial disassembly and inspection as an acceptable alternative for stroking a valve when it is impractical to use flow. In this case, there is no practical way to full-stroke these check valves using flow using quantifiable acceptance criteria with the existing system design.

.2 ISTC-3522 states that: (a) During operation at power, each check valve shall be exercised or examined in a manner that verifies obturator travel by using the methods in ISTC-5221; (b) If exercising is not practicable during operation at power, it shall be performed during cold shutdowns; and (c) If exercising is not practicable during operation at power and cold shutdowns, it shall be performed during refueling outages.

Alternate Testing Justifications

18.1.7 (continued)

.3 OM-ISTC-5221(c)(3) states that at least one valve from each group shall be disassembled and examined at each refueling outage; all valves in each group shall be disassembled and examined at least once every 8 years.

.4 Non-intrusive techniques have been considered. However, because these diaphram valves have little or no metal internal parts, non-intrusive techniques (such as radiograph, magnetics or acoustics) cannot be utilized to verify the valves achieve full stroke capability. Although it is conceivable radiography could be utilized to verify closure, the valve must be disassembled anyway to verify the open capability, and so there is no additional value in verifying closure through non-intrusive techniques.

.5 These valves are non-Code valves that have a safety function and therefore require periodic surveillance. Since these valves are non-code components, relief from the NRC is not required for deviation from the requirements of the ASME OM Code.

.6 These valves are removed and replaced with pre-tested valves at a frequency of every 4 years coincident with respective Diesel Generator overhaul. This frequency of removal and replacement varies from the Code requirement that at least one valve from each group shall be disassembled and examined at each refueling outage as stated in OM-ISTC-5221(c)(3). However, it exceeds the requirement for examination of once every 8 years.

.7 Diesel Generator overhauls are performed online at 4 year intervals. This frequency of testing is not within the test frequency requirements of OM-ISTC-3522. However, it exceeds the requirement for examination of once every 8 years.

.8 This method of testing meets the intent of the Code.

18.1.8 TEST SCHEDULE

.1 These valves are removed and replaced with pre-tested valves at a frequency of every 4 years coincident with respective Diesel Generator overhaul.

.2 Partial valve stroke is achieved during the post-overhaul DG runs and quarterly TS surveillances

18.2 LEFT INTENTIONALLY BLANK.

Alternate Testing Justifications

18.3 **S2(3)2420MU130,** Fuel Priming Pump Supply Header Check Valve
S2(3)2420MU150, Fuel Priming Pump Supply Header Check Valve
S2(3)2420MU167, Fuel Priming Pump Supply Header Check Valve
S2(3)2420MU172, Fuel Priming Pump Supply Header Check Valve

18.3.1 Test Requirement: OM-ISTC-3510, Active Category C check valves shall be exercised nominally every 3 months.

18.3.2 Alternate Testing: The valves will be replaced during each Diesel Generator overhaul outage with pretested valves. The frequency of the overhauls is every 4 years.

18.3.3 The replacement valves are subject to inspection and manual full stroke prior to installation. The valves which are removed from the system are kept for IST evaluation.

18.3.4 Diesel Generator surveillance run following the overhaul serves as post-maintenance testing for the newly installed pretested valves.

18.3.5 These check valves have a safety function to close; in the closed position the valve precludes backflow through the Fuel Priming Pump.

18.3.6 Test Methodology

.1 NORMAL PLANT OPERATION

During normal plant operation, TS surveillance runs of the Diesel Generator demonstrate these valves, as a group, are performing their function. However, there are no measurable parameters for the CVTC which can definitively verify adequate operation.

.2 OVERHAUL MODES

During Diesel Generator overhaul, stroke exercising of these valves could be possible with flow with temporary modifications to test these valve in place; however, such testing would be more labor intensive than replacement with pretested valves each overhaul. Diesel Generator overhauls are performed during plant operation.

Alternate Testing Justifications

18.3.7 CONCLUSION

.1 The Code required testing could only be performed after significant system modifications involving considerable costs. OM-ISTC-5221(c) identifies partial disassembly and inspection as an acceptable alternative for stroking a valve when it is impractical to use flow. In this case, there is no practical way to full-stroke these check valves using flow with the existing system design.

.2 OM-ISTC-5221(c)(3) states that at least one valve from each group shall be disassembled and examined at each refueling outage; all valves in each group shall be disassembled and examined at least once every 8 years.

.3 ISTC-3522 states that: (a) During operation at power, each check valve shall be exercised or examined in a manner that verifies obturator travel by using the methods in ISTC-5221; (b) If exercising is not practicable during operation at power, it shall be performed during cold shutdowns; and (c) If exercising is not practicable during operation at power and cold shutdowns, it shall be performed during refueling outages.

.4 Non-intrusive techniques have been considered. However, because a flow path cannot be constructed which will fully stroke the valves, there is non-intrusive technique such as magnetics or acoustics that can be utilized to verify the valves achieve full stroke capability. Radiography to verify closure of a 5/8" check valve is inpracticable and would have unreliable results, at best. Therefore, no additional value results from verifying closure through non-intrusive techniques.

.5 These valves are non-Code valves that have a safety function and therefore require periodic surveillance. Since these valves are non-code components, relief from the NRC is not required for deviation from the requirements of the ASME OM Code.

.6 These valves are removed and replaced with pre-tested valves at a frequency of every 4 years coincident with respective diesel Generator overhaul. This frequency of removal and replacement varies from the Code requirement that at least one valve from each group shall be disassembled and examined at each refueling outage but exceeds the requirement for examination of once every 8 years. This method of testing meets the intent of the Code.

Alternate Testing Justifications

18.3.7 (continued)

.7 Diesel Generator overhauls are performed online at 4 year intervals. This frequency of testing is not within the test frequency requirements of OM-ISTC-3522. However, it exceeds the requirement for examination of once every 8 years

18.3.8 TEST SCHEDULE

.1 These valves are removed and replaced with pre-tested valves at a frequency of every 4 years coincident with respective Diesel Generator overhaul.

.2 A partial valve stroke is achieved during the post-overhaul DG runs and quarterly TS surveillances.

18.4 **S2(3)2420MU121,** Engine Sump Turbo Supply Check Valve
S2(3)2420MU141, Engine Sump Turbo Supply Check Valve
S2(3)2420MU145, Engine Sump Turbo Supply Check Valve
S2(3)2420MU163, Engine Sump Turbo Supply Check Valve

S2(3)2420MU120, Engine Sump Turbo Supply Check Valve
S2(3)2420MU140, Engine Sump Turbo Supply Check Valve
S2(3)2420MU136, Engine Sump Turbo Supply Check Valve
S2(3)2420MU162, Engine Sump Turbo Supply Check Valve

18.4.1 Test Requirement: OM-ISTC-3510, Active Category C check valves shall be exercised nominally every 3 months.

18.4.2 Alternate Testing: The valves will be tested by disassembly, inspection and manually full stroke during each Diesel Generator overhaul outage. The frequency of the overhauls is every 4 years.

18.4.3 During shop disassembly, proper operation will be verified by manually full stroking the valve.

18.4.4 Diesel Generator surveillance run following the overhaul serves as post-maintenance testing for these valves disassembled and/or replaced.

Alternate Testing Justifications

18.4.5 Test Methodology

.1 NORMAL PLANT OPERATION

During normal plant operation, TS surveillance runs of the Diesel Generator demonstrate that these valves, as a group, are performing their function. CVTO acceptance criteria allows for open verification during DG test run. However, there are no measurable parameters to definitively verify valve closure as required by bidirectional testing of the valve.

.2 OVERHAUL MODES

During Diesel Generator overhaul, stroke exercising of these valves could be possible with flow with temporary modifications to test these valve in place; however, such testing would be more labor intensive than disassembly and inspection.

18.4.6 CONCLUSION

.1 The Code required testing could only be performed after significant system modifications involving considerable costs. OM-ISTC-5221(c) identifies partial disassembly and inspection as an acceptable alternative for stroking a valve when it is impractical to use flow. In this case, there is no practical way to full-stroke these check valves using flow with the existing system design.

.2 OM-ISTC-5221(c)(3) states that at least one valve from each group shall be disassembled and examined at each refueling outage; all valves in each group shall be disassembled and examined at least once every 8 years.

.3 Non-intrusive techniques have been considered. However, because a flow path cannot be constructed that will fully stroke the valves, there is no non-intrusive technique such as magnetics or acoustics that can be utilized to verify the valves achieve full stroke capability. Although it is conceivable radiography could be utilized to verify closure, reading the radiograph of 3/4 inch poppet check valves to verify close position would be unreliable.

Alternate Testing Justifications

18.4.6 (continued)

.4 These valves are non-Code valves that have a safety function and therefore require periodic surveillance. Since these valves are non-code components, relief from the NRC is not required for deviation from the requirements of the ASME OM Code.

.5 These valves are disassembled and inspected at a frequency of every 4 years coincident with respective Diesel Generator overhaul. This frequency of disassembly and inspection varies from the Code requirement that at least one valve from each group shall be disassembled and examined at each refueling outage but exceeds the requirement for examination of once every 8 years. This method of testing meets the intent of the Code.

18.4.7 TEST SCHEDULE

.1 These valves are disassembled, inspected and manually full stroked at a frequency of every 4 years coincident with respective Diesel Generator overhaul.

.2 An OPEN valve stroke is achieved during the post-overhaul DG runs and quarterly TS surveillances.

18.5 **S2(3)2420MU289,** Downstream Check Valve, DC Auxiliary Turbo Pump P495
S2(3)2420MU291, Downstream Check Valve, AC Lub Oil Turbo Pump P1015
S2(3)2420MU298, Downstream Check Valve, DC Auxiliary Turbo Pump P496
S2(3)2420MU300, Downstream Check Valve, AC Lube Oil Turbo Pump P1016
S2(3)2420MU295, Downstream Check Valve, DC Auxiliary Turbo Pump P497
S2(3)2420MU297, Downstream Check Valve, AC Lub Oil Turbo Pump P1017
S2(3)2420MU292, Downstream Check Valve, DC Auxiliary Turbo Pump P494
S2(3)2420MU294, Downstream Check Valve, AC Lube Oil Turbo Pump P1014

18.5.1 Test Requirement: OM-ISTC-3510, Active Category C check valves shall be exercised nominally every 3 months.

Alternate Testing Justifications

18.5.2 Alternate Testing: The valves will be tested during the respective Diesel Generator AC and DC Lube Oil Pump outages by disassembly, inspection and manually full stroking the valves. The frequency of the Diesel Generator Lube Oil Pump outages is every 2 years.

18.5.3 Diesel Generator surveillance run following the outage serves as post-maintenance testing for those valves disassembled and/or replaced.

18.5.4 Test Methodology

.1 NORMAL PLANT OPERATION

During normal plant operation, TS surveillance runs of the Diesel Generator demonstrate that these valves, as a group, are performing their function. CVTO acceptance criteria allows for open verification during DG test run. However, there are no measurable parameters to definitively verify valve closure as required by bidirectional testing of the valve.

.2 .EQUIPMENT OUTAGE MODES

During Diesel Generator AC and DC Lube Oil Pump outages, stroke exercising of these valves could be possible with flow with temporary modifications to test these valve in place; however, such testing would be more labor intensive than the disassembly and inspection method. Diesel Generator AC and DC Lube Oil Pump outages are performed during plant operation.

18.5.5 CONCLUSION

.1 The Code required testing could only be performed after significant system modifications involving considerable costs. OM-ISTC-5221(c) identifies partial disassembly and inspection as an acceptable alternative for stroking a valve when it is impractical to use flow. In this case, there is no practical way to full-stroke these check valves using flow with the existing system design.

.2 ISTC-3510 states that Category C check valves shall be exercised nominally every 3 months, except as provided by ISTC-3520.

Alternate Testing Justifications

18.5.5 (continued)

.3 ISTC-3522 states that: (a) During operation at power, each check valve shall be exercised or examined in a manner that verifies obturator travel by using the methods in ISTC-5221; (b) If exercising is not practicable during operation at power, it shall be performed during cold shutdowns; and (c) If exercising is not practicable during operation at power and cold shutdowns, it shall be performed during refueling outages.

.4 These valves are non-Code valves that have a safety function and therefore require periodic surveillance. Since these valves are non-code components, relief from the NRC is not required for deviation from the requirements of the ASME OM Code.

.5 These valves are disassembled and inspected at a frequency of every two years coincident with respective Diesel Generator AC and DC Lube Oil Pump outages. This frequency of disassembly and inspection varries from the Code in that the testing is performed during operation at power at a two year frequency. This is frequency is not in accordance with the Code requirements as stated above, however, the intent of the Code is being satisfied.

18.5.6 TEST SCHEDULE

.1 These valves are disassembled, inspected and manually full stroked at a frequency of every 2 years coincident with respective Diesel Generator AC and DC Lube Oil Pump outages.

.2 An OPEN valve stroke is achieved during the post-overhaul DG runs and quarterly TS surveillances.

18.6 **S2(3)2420MU290,** Downstream Check Valve, Y-Strainer MF1334
S2(3)2420MU293, Downstream Check Valve, Y-Strainer MF1333
S2(3)2420MU296, Downstream Check Valve, Y-Strainer MF1336
S2(3)2420MU299, Downstream Check Valve, Y-Strainer MF1335

18.6.1 Test Requirement: OM-ISTC-3510, Active Category C check valves shall be exercised nominally every 3 months.

18.6.2 Alternate Testing: The valves will be tested during Diesel Generator AC Lube Oil Circulating Pump outages by disassembly, inspection and manually full stroking the valves. The frequency of the Diesel Generator AC Lube Oil Circulating Pump outages is every 2 years.

18.6.3 Diesel Generator surveillance run following the outage serves as post-maintenance testing for the valves disassembled and/or replaced.

Alternate Testing Justifications

18.6.4 Test Methodology

.1 NORMAL PLANT OPERATION

During normal plant operation, TS surveillance runs of the Diesel Generator demonstrate that these valves, as a group, are performing their function. CVTO acceptance criteria allows for open verification during DG test run. However, there are no measurable parameters for the valve closure as requested in bidirectional testing of valve to definitively verify adequate operation.

.2 EQUIPMENT OUTAGE MODES

During Diesel Generator AC Lube Oil Circ Pump overhaul, stroke exercising of these valves could be possible with flow with temporary modifications to test these valve in place; however, such testing would be more labor intensive than the disassembly, inspection and manual full stroke. Diesel Generator AC Lube Oil Circulating Pump outages are performed during plant operation.

18.6.5 CONCLUSION

.1 The Code required testing could only be performed after significant system modifications involving considerable costs. OM-ISTC-5221(c) identifies partial disassembly and inspection as an acceptable alternative for stroking a valve when it is impractical to use flow. In this case, there is no practical way to full-stroke these check valves using flow with the existing system design.

.2 ISTC-3510 states that Category C check valves shall be exercised nominally every 3 months, except as provided by ISTC-3520.

.3 ISTC-3522 states that: (a) During operation at power, each check valve shall be exercised or examined in a manner that verifies obturator travel by using the methods in ISTC-5221; (b) If exercising is not practicable during operation at power, it shall be performed during cold shutdowns; and (c) If exercising is not practicable during operation at power and cold shutdowns, it shall be performed during refueling outages.

.4 These valves are non-Code valves that have a safety function and therefore require periodic surveillance. Since these valves are non-code components, relief from the NRC is not required for deviation from the requirements of the ASME OM Code.

Alternate Testing Justifications

18.6.5 (continued)

.5 These valves are disassembled and inspected at a frequency of every 2 years coincident with respective Diesel Generator AC Lube Oil Circulating Pump outages. This frequency of disassembly and inspection varries from the Code in that the testing is performed during operation at power at a two year frequency. This is frequency is not in accordance with the Code requirements as stated above: however, the intent of the Code is being satisfied.

18.6.6 TEST SCHEDULE

.1 These valves are disassembled, inspected and manually full stroked at a frequency of every 2 years coincident with respective Diesel Generator AC Lube Oil Circulating Pump outages.

.2 An OPEN valve stroke is achieved during the post-overhaul DG runs and quarterly TS surveillances.

19.0 FIRE PROTECTION

19.1 **SA2301MU061,** Check Valve Downstream of Pen 14/Unit 2
SA2301MU095, Check Valve Downstream of Penetration 14

19.1.1 Test Requirement: OM-ISTC-3510, Active Category AC check valves shall be exercised nominally every 3 months.

19.1.2 Alternate Testing: Test these valves at refueling intervals.

19.1.3 Containment isolation inside containment for nitrogen supply to various components.

19.1.4 The CVTC is performed in conjunction with the 10 CFR 50, "Appendix J" seat leakage test. Testing of these valves requires utilization of LLRT test equipment and containment entry. Performing the CLOSE test of these valves in conjunction with the LEAKAGE test at refueling intervals is consistent with OM-ISTC-5221(a).

Valves with Protected Maximum Stroke Times

See Note 3 in Attachment 2 to this procedure. Valves with protected stroke times are:

Valve and Test		Safety Analysis Stroke Limit (Seconds)
2(3)HV0508	BTC	40
2(3)HV0509	BTC	40
2(3)HV0510	BTC	40
2(3)HV0511	BTC	40
2(3)HV0512	BTC	40
2(3)HV0513	BTC	40
2(3)HV0514	BTC	40
2(3)HV0515	BTC	40
2(3)HV0516	BTC	40
2(3)HV0517	BTC	40
2(3)HV1105	BTC	10
2(3)HV1106	BTC	10
2(3)HV4047	BTC	10
2(3)HV4048	BTC	10
2(3)HV4051	BTC	10
2(3)HV4052	BTC	10
2(3)HV4053	BTC	20

Valves with Protected Maximum Stroke Times

Valve and Test		Safety Analysis Stroke Limit (Seconds)
2(3)HV4054	BTC	20
2(3)HV4057	BTC	20
2(3)HV4058	BTC	20
2(3)HV4705	BTC BTO	40 41.8
2(3)HV4706	BTC BTO	40 41.8
2(3)HV4712	BTC BTO	40 41.8
2(3)HV4713	BTC BTO	40 41.8
2(3)HV4714	BTC BTO	40 41.8
2(3)HV4715	BTC BTO	40 41.8
2(3)HV4716	BTC BTO	1.4 27.2
2(3)HV4730	BTC BTO	40 41.8
2(3)HV4731	BTC BTO	40 41.8
2(3)HV4762	BTC	40
2(3)HV4763	BTC	40
2(3)HV5388	BTC	40
2(3)HV5434	BTC	40
2(3)HV5437	BTC	40
2(3)HV5686	BTC	40

Valves with Protected Maximum Stroke Times

Valve and Test		Safety Analysis Stroke Limit (Seconds)
2(3)HV5803	BTC	40
2(3)HV5804	BTC	40
2(3)HV6200	BTO	20
2(3)HV6201	BTO	20
2(3)HV6202	BTO	20
2(3)HV6203	BTO	20
2(3)HV6211	BTC	40
2(3)HV6212	BTC	19.7[2]
2(3)HV6213	BTC	19.7[2]
2(3)HV6216	BTC	40
2(3)HV6218	BTC	19.7[2]
2(3)HV6219	BTC	19.7[2]
2(3)HV6223	BTC	40
2(3)HV6236	BTC	40
2(3)HV6366	BTO	12
2(3)HV6367	BTO	12
2(3)HV6368	BTO	12
2(3)HV6369	BTO	12

Valves with Protected Maximum Stroke Times

Valve and Test		Safety Analysis Stroke Limit (Seconds)
2(3)HV6370	BTO	12
2(3)HV6371	BTO	12
2(3)HV6372	BTO	12
2(3)HV6373	BTO	12
2(3)HV6376	BTO	20.5
2(3)HV6377	BTO	20.5
2(3)HV6378	BTO	20.5
2(3)HV6379	BTO	20.5
2(3)HV6500	BTO	12
2(3)HV6501	BTO	12
2(3)HV6569	BTO	5
2(3)HV6570	BTO	5
2(3)HV7258	BTC	40
2(3)HV7259	BTC	40
2(3)HV7512	BTC	40
2(3)HV7513	BTC	40
2(3)HV7800	BTC	1
2(3)HV7801	BTC	1

Valves with Protected Maximum Stroke Times

Valve and Test		Safety Analysis Stroke Limit (Seconds)
2(3)HV7802	BTC	1
2(3)HV7803	BTC	1
2(3)HV7805	BTC	1
2(3)HV7806	BTC	1
2(3)HV7810	BTC	1
2(3)HV7811	BTC	1
2(3)HV7816	BTC	1
2(3)HV7911	BTC	40
2(3)HV8200	BTO	20
2(3)HV8201	BTO	20
2(3)HV8202	BTC	40
2(3)HV8203	BTC	40
2(3)HV8204	BTC	8[3]
2(3)HV8205	BTC	8[3]
2(3)HV8419	BTC	20
2(3)HV8421	BTC	20
2(3)HV9205	BTC	40
2(3)HV9217	BTC	40

Valves with Protected Maximum Stroke Times

Valve and Test		Safety Analysis Stroke Limit (Seconds)
2(3)HV9218	BTC	40
2(3)HV9302	BTO	39.5
2(3)HV9303	BTO	39.5
2(3)HV9304	BTO	39.5
2(3)HV9305	BTO	39.5
2(3)HV9306	BTC	39.8
2(3)HV9307	BTC	39.8
2(3)HV9322	BTO	30
2(3)HV9323	BTO	20
2(3)HV9324	BTO	20
2(3)HV9325	BTO	30
2(3)HV9326	BTO	20
2(3)HV9327	BTO	20
2(3)HV9328	BTO	30
2(3)HV9329	BTO	20
2(3)HV9330	BTO	20
2(3)HV9331	BTO	30
2(3)HV9332	BTO	20

Valves with Protected Maximum Stroke Times

Valve and Test		Safety Analysis Stroke Limit (Seconds)
2(3)HV9333	BTO	20
2(3)HV9334	BTC	40
2(3)HV9341	BTC	10
2(3)HV9347	BTC	39.8
2(3)HV9348	BTC	39.8
2(3)HV9351	BTC	10
2(3)HV9361	BTC	10
2(3)HV9367	BTO	12
2(3)HV9368	BTO	12
2(3)HV9371	BTC	10
2(3)HV9433	BTC	10
2(3)HV9437	BTC	10
2(3)HV9821	BTC	5
2(3)HV9823	BTC	5
2(3)HV9824	BTC	5
2(3)HV9825	BTC	5
2(3)HV9900	BTC	40
2(3)HV9920	BTC	40

Valves with Protected Maximum Stroke Times

Valve and Test		Safety Analysis Stroke Limit (Seconds)
2(3)HV9921	BTC	40
2(3)HV9948	BTC	12
2(3)HV9949	BTC	12
2(3)HV9950	BTC	12
2(3)HV9951	BTC	12
2(3)HV9971	BTC	40
2(3)TV9267	BTC	40

[1]Deleted

[2]See NCR G-0852.

[3]Technical Specification Surveillance SR 3.7.2.1.

Inservice Testing Database Change Record

NOTES:

1. IST Acceptance Limits shall NOT exceed safety analysis limits.
2. Use this Attachment to document a change in IST acceptance criteria and for all changes to IST database.
3. More than one valve and/or limit may be documented with a Change Record. Any notation is acceptable provided the resulting record is clear. (Example: "2(3)HV9336/2(3)HV9367" "BTO/BTC", and "open 12 sec/close 13 sec").

Affected Valve Equipment Id.:_____

Inservice Testing Test Types: _____

IST LIMIT CHANGES:
UPPER LIMIT:

OLD LIMIT_____ (Value and Units) NEW LIMIT:_____ (Value and Units)

LOWER LIMIT (STROKE TIME ONLY):

OLD LIMIT_____ (Value and Units) NEW LIMIT:_____ (Value and Units)

THE NEW LIMIT (OR IST DATABASE CHANGE) HAS BEEN VERIFIED TO BE WITHIN THE SAFETY ANALYSIS LIMIT OF_____. (Value and Units)

REFERENCE OR SOURCE:_____ (Example: LCS 3.6.101)

DESCRIPTION OF CHANGE, BASIS AND REFERENCE DOCUMENT (AS APPLICABLE):

_____

_____

_____

IST Database Change entry PERFORMED BY:_____ Signature and Date

IST Database Change VERIFIED/APPROVED BY:_____ Signature and Date

Distribution:
CDM (original) **Operations Procedures Group**
IST Chron File **Operations Surveillance and Audits Group**

GUIDELINE ON POST-MAINTENANCE RTS INSERVICE TESTING

1.0 OBJECTIVES:

1.1 This attachment restates IST requirements in main body of this procedure that are applicable to Post Maintenance Testing.

1.2 This attachment provides guidelines and sequencing to establish a new reference or re-confirm the prior IST reference value following potentially stroke-affecting maintenance.

1.2.1 This attachment uses "Designating the post-maintenance IST result as a New Reference" as the default method of ensuring a valid reference value exists prior to returning the valve to operable status.

1.2.2 This attachment allows the valve or system engineer, or IST Coordinator "re-confirm the previous reference value" after the valve has been returned to service with a new reference.

2.0 POST-MAINTENANCE TESTING:

2.1 Upon completion of maintenance on valves within the IST program the following OM-ISTC requirements apply:

2.1.1 Prior to returning a repaired or replacement valve to service, a test demonstrating satisfactory operation shall be performed [Reference 2.1.3, OM-ISTC-3630(f), 5123(e), 5133(e), 5143(e), 5153(e), 5210, 5224, OMb-ISTC-5115(e)]. See step 6.6.4.4.

CAUTION: The 96-hour evaluation period (allowed for routine ISTs under section 6.6.4.2.1) does NOT apply to Post-Maintenance ISTs. New Reference must be set OR the Current Reference must be confirmed before the valve is declared OPERABLE

2.1.2 Effect of Valve or Actuator Replacement, Repair, and Maintenance on Reference Values [Reference 2.1.3, OM-ISTC-3310]. See step 6.5.2.4.

GUIDELINES ON POST-MAINTENANCE INSERVICE TESTING

NOTE: Adjustments, removal or replacement of stem packing, limit switches, control system valves, bonnet, stem assembly, actuator, obturator, or other control system components are examples of maintenance that could affect valve performance parameters such as stroke time.

2.1.2 (continued)

.1 When a valve or its control system has been replaced, repaired, or has undergone maintenance that could affect the valve's performance, then either:

i) a new reference value shall be determined, or

ii) previous Reference value reconfirmed by an inservice test run **prior to the time the valve is returned to service**, **or immediately if not removed from service**. This test is to demonstrate valve performance parameters that could be affected by the replacement, repair, or maintenance are within acceptable limits.

.2 Deviations between the previous and new reference values shall be identified and analyzed.

.3 Verification that the new values represent acceptable operation shall be documented in the record of tests and/or the IST Database.

.4 Safety and relief valves and nonreclosing pressure relief devices shall be tested as required by the replacement, repair, and maintenance requirements of OM Appendix I. [Reference 2.1.2]

GUIDELINES ON POST-MAINTENANCE INSERVICE TESTING

3.0 SEQUENCING OF POST-MAINTENANCE RTS INSERVICE TESTING

3.1 Figure 1, Post-Maintenance Reference Test Evaluation Sequence, is a flowchart showing the recommended sequence to assure a valve work is completed, retested and returned to OPERABLE status in a timely manner:

- Valve repair/replacement with IST limits stated in MO,
- Identification of deviation from current reference,
- Determination of proper valve operation,
- As-Left Stroke evaluation,
- Performing any Retests & Post-Maintenance IST,
- Results Validation by SRO Supervisor,
- Designation of New Reference,
- Declaration of OPERABILITY,
- Entry of PM-IST result and new reference,
- Confirmation of PM-IST new reference.

GUIDELINES ON POST-MAINTENANCE INSERVICE TESTING

Figure 1

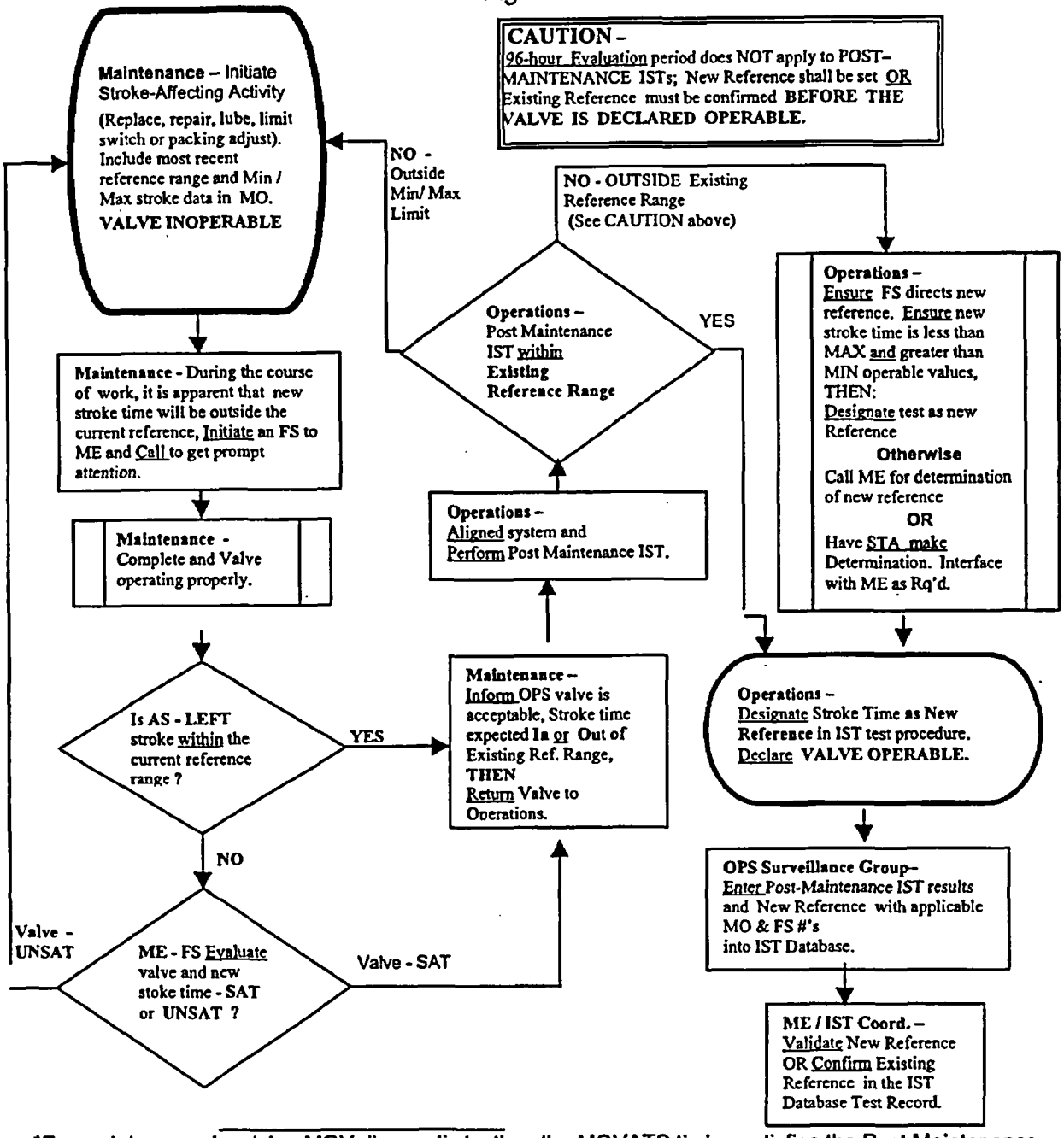

*For maintenance involving MOV diagnostic testing, the MOVATS timing satisfies the Post Maintenance IST requirement.

GUIDELINES ON POST-MAINTENANCE INSERVICE TESTING

3.2 KEY POINTS for Figure 1, Post-Maintenance Reference Test Evaluation Sequence, are as follows:

3.2.1 **Maintenance** - Initiate Stroke-Affecting Activity (Replace, repair, lube, limit switch or packing adjust). Include most recent reference range and Min / Max stroke data in MO. **VALVE INOPERABLE** at the onset of work activity.

Maintenance Division has the lead to identify stroke-affecting work and incorporating into the MO the current IST reference range and the Minimum and Maximum operability limits from NCDB/PMDS.

Stroke-Affecting Activity as defined by the Code as any work affecting valve performance (see Step 6.5.2.5) including, but not limited to:

- Adjustments, or replacement,
- Stem packing adjustment, removal or replacement,
- Limit switch adjustment, or replacement,
- Control system valves or other components adjustment, or replacement,
- Bonnet, stem assembly, actuator, obturator, or valve components.

Maintenance - When during the course of work it is apparent that new stroke time will be outside the current reference,

Initiate an FS to Maintenance Engineering and
Call to get prompt attention.

Maintenance Division has the lead to identify as early as possible that the replacement/repaired valve will stroke outside the current reference range and to call either Maintenance Engineering Valve Engineer, System Engineer, or IST Coordinator to assist in diagnosing between a malfunction and acceptable stroke-time change due to the repair.

A Field Support (FS) assignment on the equipment-related AR will be made to the Maintenance Engineering Valve Engineer, System Engineer, or IST Coordinator as the formal method notification and documentation. However, as needed to meet timeliness expectations, Maintenance will call the Engineer, STA, or Maintenance Engineering Weekend Duty Supervisor to assure the FS gets prompt attention.

GUIDELINES ON POST-MAINTENANCE INSERVICE TESTING

3.2.2 **Maintenance** - Complete and Valve operating properly.

This box simply restates what is implicit in the normal San Onofre work process upon return of equipment to Operations:

Maintenance certifies the repair work is complete (CAT-70), the valve operates acceptably (stroking properly), and the valve ready for retest.

Based on this certification that valve operation is acceptable, Operations will designate the post-maintenance IST stroke time as a New Reference time.

3.2.3 **Maintenance** - Is **AS-LEFT** stroke within the current reference range?

This decision diamond determines Maintenance Engineering's formal involvement in repair process.

As-left stroke times OUTSIDE the current Reference Range requires engineering evaluation before return of equipment to Operations.

However, an As-left stroke time WITHIN the existing Reference Range of a rebuilt, repaired, or adjusted valve is an acceptable variation for a routine IST, and it is thus acceptable to designate it as a new reference following maintenance in combination with the Maintenance assurance of proper operation (in the block above).

3.2.4 **Maintenance Engineering** - FS Evaluate valve and new stroke time - SAT or UNSAT?

This decision diamond Maintenance Engineering provides a formal evaluation of valve operation and the new as-left stroke as to whether it is acceptable or not.

.1 **UNSAT** - Valves deemed to have unacceptable performance, including stroke time, will remain within the maintenance process until resolved.

OM-ISTC-3310 (Reference 2.1.3) requires "Deviations between previous and new reference values shall be identified and analyzed. Verification that the values shall be documented in the record of test."

GUIDELINES ON POST-MAINTENANCE INSERVICE TESTING

3.2.4 (continued)

.2 **SAT** - The engineering evaluation will consider the effects of repair work and adjustments and qualitatively (and quantitatively, as needed) to assess the stroke-time change in valve performance and document acceptability of valve operation in the FS (Field Support assignment). By reference to AR assignment number the evaluation is recorded in the "record of test."

3.2.5 **Maintenance**

Inform OPS valve is acceptable, Stroke time expected **In** or **Out** of Current Reference Range, THEN

Return Valve to Operations.

Again, this box simply restates what is implicit in the normal San Onofre work process:

Communication of equipment condition and performance expectations upon its return to Operations.

3.2.6 **Operations**

Align system and

Perform Post Maintenance IST**.

This box simply states what is implicit in the normal San Onofre work process upon return of equipment to Operations:

Operations aligns the system by picking up clearance tags via the WAR process and repositions valves and equipment, as needed.

Operations perform operability test in accordance with the WAR Retest Requirements which, typically, includes an IST per Operation's IST procedures.

** For maintenance involving MOV diagnostic testing, the MOVATS timing satisfies the Post Maintenance IST requirement.

GUIDELINES ON POST-MAINTENANCE INSERVICE TESTING

3.2.7 **Operations** - Post Maintenance IST* within Current Reference Range and Min & Max limits?

This diamond restates what is explicit in Operations' IST procedures - evaluation of the test result against IST acceptance criteria (within reference range and the minimum and maximum operability limits) obtained from NCDB/PMDS IST database.

.1 YES - IST results within BOTH Min & Max limits and the Current Reference Range require no additional evaluation.

.2 NO (Min/Max) - IST results outside Min & Max limits fails the valve and returns it to the maintenance process for additional work and/or engineering evaluation.

.3 NO (Reference Range) - IST results outside the existing Reference Range requires Maintenance Engineering evaluation document in an FS that valve operates acceptably and a new reference is directed or the current reference is appropriate.

3.2.8 CAUTION

"**CAUTION** 96-hour Evaluation period does NOT apply to POST-MAINTENANCE ISTs; New Reference shall be set OR Current Reference must be confirmed **BEFORE THE VALVE IS DECLARED OPERABLE.**"

The CAUTION BOX applies to IST results outside the Current Reference range. The 96 hour evaluation grace period [Reference 2.1.3, OM-ISTC-5123(b), 5133(b), 5143(b), 5153(b)] applies only to routine ISTs.

Following maintenance, OM-ISTC-3310 (Reference 2.1.3) requires the valve remain INOPERABLE until either:

- New IST Reference value is set, or
- Existing IST Reference value is confirmed.

* For maintenance involving MOV diagnostic testing, the MOVATS timing satisfies the Post Maintenance IST requirement.

GUIDELINES ON POST-MAINTENANCE INSERVICE TESTING

3.2.9 Operations

Ensure FS directs new reference.

Ensure new stroke time is less than MAX and greater than MIN operable values, THEN:

Designate test as New Reference.

Otherwise

Call Maintenance Engineering for determination of new reference

OR

Have STA (Shift Technical Advisor) coordinate the determination. Interface with Maintenance and Maintenance Engineering as Required.

This box double checks the requirements to designate an IST result that is outside the current reference range as the new reference value:

- Maintenance Engineering evaluation documented in an FS directing new IST result be the new reference, and
- The new stroke time is between MAX and MIN operable values.

Options are provided for the case where IST result occurred are outside reference range and no FS evaluation was prepared before hand. Contact Maintenance Engineering Duty Supervisor or have the STA make the evaluation with Maintenance Engineering assistance, as needed.

3.2.10 Operations

Designate Stroke Time as **New Reference** in the IST test procedure.

Declare the **VALVE OPERABLE.**

This rounded box directs closure; requirements for a new reference has been met in the boxes above and all that remain are designating the result as a new reference in the Operation Inservice test procedure and declaring the valve operable.

3.2.11 **OPS Surveillance Group**--Enter Post-Maintenance IST results and New Reference with applicable MO & FS numbers into IST Database.

This box shows the Operations Surveillance Group as responsible for entry of the IST test result into the electronic record (NCDB/PMDS) as a new reference with applicable MO and FS numbers.

GUIDELINES ON POST-MAINTENANCE INSERVICE TESTING

3.2.12 *Maintenance Engineering/Inservice Test Coordinator–*

Validate New Reference **OR**
Confirm Prior Reference in the IST Database Test Record.

This box directs the IST Program Coordinator or designee to review and validate the designation of the new reference. Per OM-ISTC-3310 [Ref. 2.1.3]:

> Deviations between the previous and new reference shall be identified and analyzed. Verification that new values represent acceptable operation shall be document in the record of test.

.1 IST results within the previous reference range may be candidates for confirmation of the previous reference and REMOVING THE NEW REFERENCE designation from the electronic IST record with explaining comments or use of a separate comment record. Confirming the prior reference is appropriate to prevent "reference creep" thereby masking a potentially degrading condition or trend.

.2 When a "new reference designation" is removed, ALL test results subsequent to that record shall be confirmed to be within the reference range "now-in-effect".

VALVE RELIEF REQUEST

10 CFR 50.55a Request Number IST-3-R-1 Rev. 1
Information to Support NRC Re-Approval of a 10CFR 50.55a Request for Use During a New 10-Year Interval Inservice Testing Program

Proposed Alternative
In Accordance with 10 CFR 50.55a(a)(3)(i)

Alternative Provides Acceptable Level of Quality and Safety

1.0 Previous 10 CFR 50.55a Request Approved by NRC

Relief Request Number: IST-001

ASME Code Components Affected:

Various (Refer to Table 2.3-1 of the Station Risk-Informed Inservice Testing Program), References 1 and 2.

References:

1. Letter from A. E. Scherer (SCE) to the Document Control Desk (NRC) dated December 30, 1998; Subject: Docket Nos. 50-361 and 50-362, Request to implement a Risk-informed Testing Program During the Remainder of the Second Ten-Year Interval, San Onofre Nuclear Generating Station, Units 2 and 3

2. Letter from A.E. Scherer (SCE) to the Document Control Desk (NRC) dated November 30, 1999; Subject Docket Nos. 50-361 and 50-362, Risk-Informed Inservice Testing (TAC Nos. MA 4509 and MA 4510) San Onofre Nuclear Generating Station, Units 2 and 3.

3. Letter from Stephen Dembek (NRC) to Harold B. Ray (SCE) dated March 27, 2000; Subject: San Onofre Nuclear Generating Station (SONGS), Units 2 and 3 – Risk-Informed Inservice Testing Program for Pumps and Valves (TAC Nos. MA 4509 and MA 4510).

2.0 Applicable Code and Addenda

Code-1998 Code for Operation and Maintenance of Nuclear Power Plants, ASME OMa Code-1999 and ASME OMb Code-2000.

VALVE RELIEF REQUEST

10 CFR 50.55a Request Number IST-3-R-1 Rev. 1

3.0 Changes to the Applicable ASME Code Section

OM-1 of OM Code-1987, OMa-1988, OMb-1999 has been incorporated as a mandatory Appendix 1 of the OM Code 1998, OMa-1999, OMb-2000. Relief valves are excluded from the Risk Informed Inservice Testing (RI-IST) program because Southern California Edison (SCE) plans to continue to test these components at the prescribed intervals of OM Code 1998, OMa-1999, OMb-2000.

OM-6 of OM Code-1987, OMa-1988, OMb-1999 has been renumbered as ISTB of the OM Code 1998, OMa-1999, OMb-2000. ISTB defined pump categories as Group A and Group B pumps and their test frequencies are addressed in ISTB-3400. Both Group A and B pumps are subject to biennial comprehensive pump tests as tabulated in Table ISTB-3400-1. Instrument accuracies associated with respective pump tests are addressed in ISTB-3500 and summarized in Table ISTB-3500-1. Inservice Testing of centrifugal pumps, except vertical line shaft centrifugal pumps, shall be in accordance with ISTB-5100; vertical shaft centrifugal pumps shall be tested in accordance with ISTB-5200; and positive displacement pumps shall be tested in accordance with ISTB-5300. ISTB-5123, ISTB-5223, and ISTB - 5323 address comprehensive testing which is not addressed in OM-6 of OM Code-1987, OMa-1988, OMb-1999. Frequency of Inservice Testing is tabulated in Table ISTB-3400-1.

OM-10 of OM Code-1987, OMa-1988, OMb-1999 has been renumbered as ISTC of the OM Code 1998, OMa-1999, OMb-2000. Per ISTC-1200, skid-mounted valves are excluded from this Subsection ISTC, provided they are tested as part of the major component. ISTC-5000, Specific Testing Requirements, and associated Subsections have been added. ISTC-3540 Manual Valves states that manual valves shall be full stroke exercised at least once every 5 years except where adverse conditions may require the valve to be tested more frequently. ISTC-3522 Category C Check Valves requires check valve exercise tests to include open and close tests that are performed at an interval when it is practicable to perform both tests. Open and close tests are not required to be performed at the same time if they are performed within the same interval.

VALVE RELIEF REQUEST

10 CFR 50.55a Request Number IST-3-R-1 Rev. 1

In the 2nd 10-year interval, SCE in Relief Request IST-001, presented an alternative testing strategy that will apply to successive 10-year intervals as discussed in 10 CFR 50.55a(f)(4)(ii). This relief was granted by the NRC on March 27, 2000 – Reference 3. The Code changes cited above do not affect the Risk Informed Inservice Test Program because Inservice Testing of High Safety Significant Components (HSSC) will be conducted at Code specified frequencies using approved Code methods. L-H components [Low Safety Significatn Components (LSSC) with low Fussell-Vesely and high Risk Achievement Worth] and LSSC will be tested at extended test frequencies determined in accordance with the RI-IST program description.

4.0 Component Aging Factors

Component aging factors do not have an effect on Risk Informed Inservice Testing because the intent of Inservice Testing is to detect component degradation regardless of the component age. Subsections - ISTA, ISTB, ISTC and Appendix 1 of the OM Code do not address component aging.

5.0 Changes in Technology for Testing the Affected ASME Code Components(s)

The qualitative and quantitative data collected by instruments used in the Risk Informed Inservice Testing program is not affected by any change in technology.

6.0 Proposed alternative and Basis for Use

Alternate Testing: Implement a Risk Informed Inservice Testing Program per the guidance detailed in Regulatory Guide, 1.175, "An Approach for Plant -Specific, Risk Informed Decision making: Inservice Testing."

Group A pump, Group B pump, and Valve testing shall be performed in accordance with the requirements stated in ASME OM Code-1998 for Operation and Maintenance of Nuclear Power Plants, ASME OMa Code-1999 and ASME OMb Code-2000, except that the test intervals are determined per the methodology outlined in Enclosure 2 of Relief Request IST-001 (References 1 and 2).

NOTE: Comprensive pump testing will be performed at the OM Code, ISTB Specified frequency (Biennially).

VALVE RELIEF REQUEST

10 CFR 50.55a Request Number IST-3-R-1 Rev. 1

Basis for Relief: The proposed alternative testing strategy provides an acceptable level of quality and safety because key safety principles of defense-in-depth and safety margins are maintained. The impact of the proposed changes to the testing strategy has been evaluated and meets the criteria specified in the acceptance guidelines of Regulatory Guide 1.174, "An Approach for Using Probabilistic Risk Assessment in Risk-Informed Decisions on Plant-Specific Changes to the Licensing Basis." The complete description and supporting bases reside in the San Onofre Nuclear Generating Station Risk Informed Inservice Testing Program, submitted to the NRC on December 30, 1998 and supplemented by letter dated November 30, 1999 (References 1 and 2) and approved by the NRC on March 27, 2000 (Reference 3).

7.0 Confirmation of Renewed Applicability

Based on the information provided in the previous 10 CFR 50.55a request (References 1 and 2), information contained with the NRC approval documents (Reference 3) and the information provided above, the circumstances and basis continue to be applicable to this proposed relief request IST-3-R-1, Rev. 1.

8.0 Duration of Re-Approved 10 CFR 50.55a Request

This request is for the duration of the 3rd 10-year program interval that shall commence on May 1, 2004 and terminate on August 17, 2013.

VALVE RELIEF REQUEST

10 CFR 50.55a Request Number IST-3-V-1 Rev. 1
Information to Support NRC Re-Approval of a 10CFR 50.55a Request for Use During a New 10-Year Interval Inservice Testing Program

Proposed Alternative
In Accordance with 10 CFR 50.55a(a)(3)(ii)

Hardship or Unusual Difficulty without Compensating Increase in Level of Quality or Safety

1.0 Previous 10 CFR 50.55a Request Approved by NRC

Relief Request Number: Valve Relief Request Number 1

ASME Code Components Affected:

Internal spring-loaded poppet valves (check valves) in the upstream (high pressure) segment of the Shutdown Cooling System (SDC) gate valves listed in Table 1 below[1,2].

Table 1 WKM Gate Valves

Valve ID	Size (inches)	Description	Poppet Valve Removed
2HV9337	16	SDC suction containment isolation valve	No
3HV9337	16	SDC suction containment isolation valve	No
2HV9339	16	SDC suction containment isolation valve	No
3HV9339	16	SDC suction containment isolation valve	No
2HV9377	8	SDC suction containment isolation valve	No
3HV9377	8	SDC suction containment isolation valve	Yes
2HV9378	8	SDC suction containment isolation valve	No
3HV9378	8	SDC suction containment isolation valve	Yes

[1]This request is written in reference to the major equipment identification number because the spring-loaded poppet valves are internal sub-components of the main valve and do not have a specific identification number assigned.

[2]Plant configuration at time of Relief Request Submittal.

VALVE RELIEF REQUEST

10 CFR 50.55a Request Number IST-3-V-1 Rev. 1

References:

1. Letter from A. E. Scherer of SCE to U. S. Nuclear Regulatory Commission dated January 28, 2000; Docket Nos. 50-361 and 50-362 Request for Proposed Alternative Testing for Check Valves which are Internally Mounted in Motor Operated Valves, in Accordance with 10 CFR 50.55a(a)(3) San Onofre Nuclear Generating Station, Units 2 and 3 (TAC Nos. M93515 and M93516).

2. Letter from Walter C. Marsh of SCE to U. S. Nuclear Regulatory Commission dated February 13, 1996; Subject: Docket Nos. 50-361 and 50-262. Response to Generic Letter 95-07, "Pressure Locking and Thermal Binding of Safety-Related Power-Operated Gate Valves."

3. Maintenance Procedure SO123-I-6.75, Revision 4, "WKM Model D-2 Gate Valve Overhaul."

4. SCE Document No. SO23-507-5-1-207, Rev. 4, "Pressure Test of POW-R-SEAL Gate Valves." This is WKM Engineering Standard, Classification Number 36-0105.

5. SCE Document No. SO23-3-2.6, Revision 19, "Shutdown Cooling System Operation."

6. Letter from J. L. Rainsberry (SCE) to Document Control Desk (NRC) dated July 21, 1999; Subject: Response to Request for Additional Information Regarding Generic Letter 95-07, "Pressure Locking and Thermal Binding of Safety-Related Power-Operated Gate Valves."

7. Drawing No. SO23-507-5-1-366, "Pressure Relief Valve 250 ±50 psid."

8. Drawing No. SO23-507-5-1-139, "10 x 8 x 10 Class 1500, Model D-2 OPG POW-R-SEAL."

9. Letter from Stephen Dembek (NRC) to H.B Ray (SCE), Inservice Testing (IST) Program - Relief Request For Alternative Testing For Certain Check Valves, March 16, 2000.

VALVE RELIEF REQUEST

10 CFR 50.55a Request Number IST-3-V-1 Rev. 1

2.0 Changes to the Applicable ASME Code Section

OM-10 of OM Code-1987, OMa-1988, OMb-1989 has been renumbered as ISTC of the OM Code-1998, OMa-1999, OMb-2000. Sections 4.2, 4.2.2 and 4.3 of OM-10 have been renumbered as ISTC-3510, ISTC-3610 and ISTC-3522 in subsection ISTC of OM Code-1998, OMa-1999 and OMb-2000, respectively.

In the 2nd 10-year interval, SCE in Valve Relief Request Number 1, requested relief for alternative testing for the internal poppet valves listed in Table 1. This relief was granted on March 16, 2000 (Reference 9). The changes in the above referenced OM code sections have no effect on this request.

3.0 Applicable Code and Addenda

ASME OM-Code-1998 Code for Operation and Maintenance of Nuclear Power Plants, ASME OMa Code-1999 and ASME OMb Code-2000.

4.0 Applicable Code Requirement

ISTC-3510 -- Excercising Test Frequency, and ISTC-3522 -- Category C Check Valves.

5.0 Component Aging Factors

Component aging factors do not have an effect on the poppet valves as these valves are mechanically simple and extremely reliable. Poppet valve performance history shows there were no failures or degradations noted in the sixteen safety related and non-safety related valves that have been inspected. The most probable failure mode for the poppet valve is open, which satisfies the function of the valve.

6.0 Changes in Technology for Testing the Affected ASME Code Components(s)

The poppet valves are not affected by any change in technology for testing because credit is taken for the satisfactory operation of the MOV and not on the individual poppet valve test.

VALVE RELIEF REQUEST

10 CFR 50.55a Request Number IST-3-V-1 Rev. 1

7.0 Background

7.1 Function

These motor operated gate valves are manufactured by WKM. They are gate and segment style valves with Limitorque motor operators. These motor operated valves (MOVs) form the isolation boundary (Figure 1) for the Reactor Coolant System (RCS) to SDC piping. They are closed with a key switch lock during normal operation and are opened for shutdown cooling operation. The valves have both an RCS pressure isolation and containment isolation function. They are exempt from Appendix J requirements since a portion of the line inside containment remains pressurized when the RCS is pressurized.

Updated Final Safety Analysis Report Table 6.2-35 for penetration 9 exempts 2(3) HV9337 and 2(3) HV9377 from Type C testing. Seat leakage testing is required per Technical Specification 3.4.14 for all four valves. Position indication is Quality Class II, Class 1E qualified, and required to indicate valve position. Certain outside containment line break scenarios require closing these valves. Small break loss of coolant events may require opening them should the shutdown cooling system need to be used. The upstream (high pressure side) segment of each valve contains a vendor supplied spring-loaded poppet (check valve) designed to open at a differential pressure of 250±50 psid to relieve the internal pressure between the gate and segment to minimize the potential for pressure locking. The poppet valves have no rated capacity and do not have an adjustable set point. As such, they are classified as spring-loaded check valves. The motor operated valves are the first and second valves off of the reactor coolant system. There are no upstream isolation valves to facilitate pressure boundary work on the subject valves without de-fueling the reactor.

VALVE RELIEF REQUEST

10 CFR 50.55a Request Number IST-3-V-1 Rev. 1

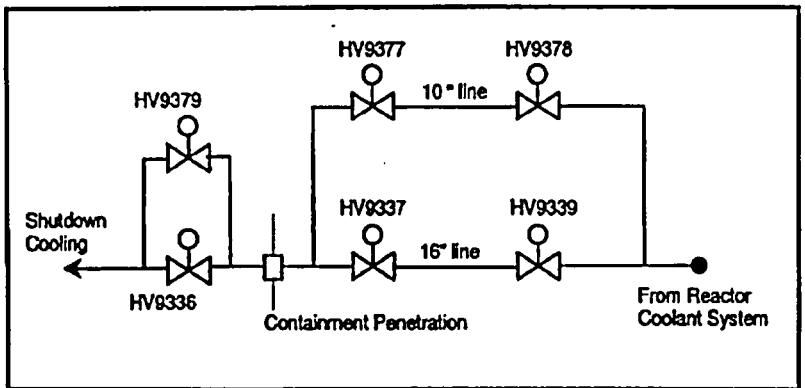

Figure 1 Simplified Valve Diagram

7.2 Discussion

The subject gate valves, manufactured by WKM, were identified in SCE's submittal of February 13, 1996 (Reference 2) as valves with potential functional impact due to pressure locking. This relief request pertains to the WKM valves currently considered as susceptible to pressure locking identified in Table 1.

The potential for pressure locking in these valves occurs because of leakage between the segment and the seat in the upstream valves, HV9339 and HV9378, which pressurizes the bonnet to the reactor coolant system (RCS) pressure of about 2,235 psia. The RCS pressure is reduced to below 400 psig prior to starting the SDC system. If internal bonnet pressure is not relieved, the high-pressure water trapped in the bonnet cavity causes the segment and the gate to press tightly against the seats. HV9377 and HV9337 may be, over time, subjected to the RCS pressure on the segment side similar to the upstream valves. For the SDC valves outside containment, 2(3) HV9336 and 2(3) HV9379, evaluation indicates that they are not susceptible to pressure locking. Therefore, they are no longer considered within the scope of Generic Letter (GL) 95-07 and are not considered in this relief request.

VALVE RELIEF REQUEST

10 CFR 50.55a Request Number IST-3-V-1 Rev. 1

In view of the pressure-locking scenario described above, a valve may fail to open if a relief path from the bonnet cavity does not exist. The function of the internal poppet valves is to provide the relief path to reduce the potential for high bonnet pressure. This function is explained in detail below.

The subject valves are equipped with a spring-loaded poppet installed in the segment, which together with the gate make up the valve disc (see Drawing No. SO23-507-5-1-139 Rev. 6). Marotta Scientific Controls, Inc. of Boonton, N.J, manufactures these poppet relief devices. The function of the poppet valve is to limit the pressure buildup in the bonnet and between the gate and the segment to a specified value. This is achieved by providing a path between the bonnet and the upstream side of the valve. Limiting the pressure differential between the bonnet and the upstream side minimizes the potential for pressure locking. The poppet valves do not protect the code class boundary. They are neither capacity rated, nor set point adjustable; therefore, they are considered check valves.

Drawing No. SO23-507-5-1-139 Rev. 6 shows a cross sectional view of the 8 inch WKM valve, ID No. 2(3) HV9378. This valve drawing is representative of the other Model D-2 OPG POW-R-SEAL WKM valves listed in Table 1. The drawing shows the valve internal components, including the valve's split disc. This disc consists of the segment and the gate. The figure also shows the location of the spring-loaded poppet in the segment (Item 31).

The poppet valve is set to begin to open at a pressure of 250±50 psid (differential pressure) between the bonnet and the upstream side (the upstream side pressure plus 300 psi represents an upper bound on the bonnet differential pressure). The following is a brief description of the poppet valve and its main components:

- The valve is 3/4" long and about 0.362" in diameter. It is threaded to the segment at the location shown in Drawing No. SO23-507-5-1-139 Rev. 6. To eliminate assembly errors, the valve cannot be installed backwards.
- The valve internals include a stainless steel poppet, a retaining ring attached to the poppet, an inconel spring, and a stellite seat assembled as shown in Drawing No. SO23-507-5-1-366. The compression spring is 0.3" in diameter and is less than 0.5" long. It is securely enclosed between a recess in the seat and the retaining ring.

VALVE RELIEF REQUEST

10 CFR 50.55a Request Number IST-3-V-1 Rev. 1

- The materials of the valve internals are highly corrosion resistant. Furthermore, the materials of the poppet and the seat (stainless steel on stellite) were selected such that binding will not occur under operating conditions. Binding could lead to the poppet being stuck in a closed position.
- The compression spring has a small height to diameter ratio. This feature ensures stability of the spring under a compressive load without the possibility of buckling.
- The valve has no guides and no stability components. It has only one moving part, the poppet assembly and the attached retaining ring.

The foregoing discussion emphasizes the valve's simplicity in design and construction. It also shows that the materials of construction were selected to provide resistance against corrosion and to eliminate the potential for binding between the poppet and the seat. The function of the valve is described briefly as follows:

- The spring is compressed during assembly between the seat and the retaining ring. The compression of the spring force is transmitted to the poppet via the retaining ring to seat it against the stellite seat to provide the desired sealing. The arrow indicating the flow direction in Drawing No. SO23-507-5-1-366 is on the bonnet side and the seat is on the upstream side.
- If the bonnet pressure is sufficient to overcome the force in the spring, lift-off will take place. Spring stiffness and the amount of pre-compression applied to the spring during assembly are calculated such that lift off occurs at the valve set point. The path created between the bonnet and the upstream side by this lift off allows some of the water trapped in the bonnet to escape to the upstream side, thus relieving the bonnet overpressure.

VALVE RELIEF REQUEST

- **10 CFR 50.55a Request Number IST-3-V-1 Rev. 1**

The poppet valve is manufactured to a very simple design, with only one moving part, the poppet, which is attached to the retaining ring (see Drawing No. SO23-507-5-1-366). The poppet can only move in the axial direction guided by the retaining ring at one end and the hole in the seat at the other end. The short length of the compression spring eliminates the potential for buckling. Also, the seat end of the spring is enclosed in a recess in the seat to prevent lateral motion. All these features ensure that the poppet is allowed to move only in the axial direction should high pressure exist in the bonnet, with practically no possibility of deviation from this simple motion. Accordingly, there is no possibility of the poppet being stuck in a cocked position. Even if the poppet became misaligned, tight seating would not be possible, which provides a relief path. The simplicity in the poppet valve design ensures a high level of reliability.

8.0 Proposed Alternative and Basis for Use

Alternate Testing: Diagnostic testing of the motor operated gate valves coupled with the normal operation during the course of the plant shutdown evolutions associated with placing the shutdown cooling (SDC) system in service provide adequate indication of the Marotta poppet valve performance. Satisfactory operation of the MOV and continued diagnostic testing satisfy periodic verification that pressure-locking scenarios are not affecting the valves' material condition. In addition, any maintenance activity requiring disassembly of the valve will include permanent removal of the poppet assembly to mitigate reliance on the poppet to minimize pressure-locking concerns (Reference 1).

VALVE RELIEF REQUEST

10 CFR 50.55a Request Number IST-3-V-1 Rev. 1

Basis for Relief: The internal spring-loaded poppet valves are component sub-assemblies of the segment of the valve. Periodic diagnostic testing of the motor operated valves coupled with the normal valve operation during the course of plant shutdown evolutions associated with placing the SDC system in service provide adequate indication of poppet valve performance. While diagnostic testing and operation of the motor operated valve does not provide direct trending information for the poppet valve performance, it does provide objective evidence that pressure locking is not occurring. Successive periodic MOV diagnostic tests clearly indicate no evidence of damage to the gate, segment, or seating surfaces as a result of pressure locking, even though the valve bonnets are exposed to RCS pressure.

The poppet valve is a mechanically simple and extremely reliable component. Review of the poppet valve performance history reveals no failures or degradation noted in the sixteen safety related and non-safety related valves that have been inspected. The most probable failure mode for the poppet valve is open, which satisfies the function of the valve. The poppet valve, which is installed in the upstream segment, has no close function, as the down-stream gate is the rated seating member of the valve.

There are two viable methods of quantitative testing for the Marotta poppet valves.

1. The first method entails a major valve disassembly and removal of the poppet from the valve segment. Once removed, the poppet can then be tested and inspected. Disassembly of the valves in Table 1 can only be accomplished with the reactor defueled and the reactor coolant system (RCS) loops drained. Based on the recent overhaul of 3HV9377 in January 2003 per MO's 0101102001, 01030323000, 02091841000 and 02040318000, which inclued the complete disassembly of the valve, the replacement of the poppet valve with a fixed orifice plug, reassembly of the valve, followed by MOV diagnostic testing took over 750 man-hours to complete.

VALVE RELIEF REQUEST

10 CFR 50.55a Request Number IST-3-V-1 Rev. 1

Given that there are four (4) valves per unit, SCE would have to defuel the reactor each refueling outage, drain the RCS loops and expend over 3,000 man-hours per refueling outage to disassemble the MOVs in order to test the poppet valves. The outage impact and the man-hours associated with testing the poppet valves at a refueling interval frequency represent a significant hardship without a compensating increase in level of quality or safety.

2. The second method involves removal of one body plug followed by the application of a pressure source to the valve body cavity. The attendant pressure profile generally characterizes poppet valve performance, although the results may be confused by seat leakage.

Both poppet test scenarios disable the shutdown cooling system and require breaching the reactor coolant system pressure boundary. Both scenarios require a de-fueled condition with the reactor coolant loops drained. The outage impact and the man-hours cost associated with testing the poppet valves at a refueling interval frequency represent a significant harship without a compensating increase in level of quality or safety.

9.0 Confirmation of Renewed Applicability

Based on the information provided in the previous 10 CFR 50.55a request (Reference 1), information contained with NRC approval documents (Reference 9) and the information provided above, the circumstances and basis continue to be applicable to this proposed relief request IST-3-V-1 Rev. 1.

10.0 Duration of Re-Approved 10 CFR 50.55a Request

This request is for the duration of the 3rd 10-year program interval that shall commence on May 1, 2004 and terminate on August 17, 2013.

VALVE RELIEF REQUEST

10 CFR 50.55a Request Number IST-3-V-1 Rev. 1

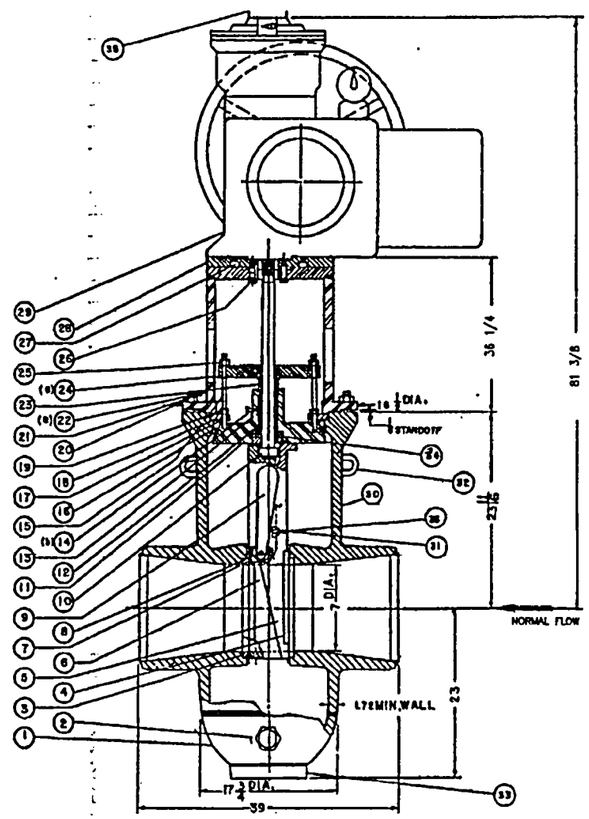

	NO	DESCRIPTION	MATERIAL	QTY
(h)	1	BODY LOWER SECTION	ASME SA-182 GR. F316	1
(h)	2	BODY PLUG	ASME SA-479-GR 316	1
(g)(e)(d)	3	SEATS	ASTM 1-182-GR F 316L W/OL	2
(e)(g)	4	SEAT SKIRTS	ASTM A-693 GR. 630 W/CHROME PLATE	2
(h)(e)(d)	5	SEGMENT	ASME SA-487-GR CA6NM W/OL	1
(h)(e)(d)	6	GATE	ASME SA-487-GR CA6NM W/OL	1
(g)(d)(e)	7	LEVER LOCK ARM SHOE	ASTM A-693-GR 630 W/OL	2
(g)(e)	8	SHOE PIN	ASTM A-564-GR 630	2
(g)(e)	9	LEVER LOCK ARM ASSEMBLY	FABRICATED 17-4 PH	1
(g)	10	STEM	ASTM A-564-GR 630	1
(h)	11	BONNET FABRICATED	ASME SA-182 GR. F316 ASME SA-240 GR. 316	1
(j)(e)(c)	12	PACKING SET	CHESTERTON	1
(c)(j)	13	LANTERN RING	ASTM A-564 GR. 630	1
(c)(j)	14	1/2" NPT PACKING LEAK OFF PLUG	ASTM A-182 GR. F316	1
(c)(j)	15	FOLLOW PLATE STUD	ASME/ASTM (S) A-453 GR. 660, 7/8"-9NC	2
(j)(e)	16	SEAL RING	ASTM A-182 GR. F316	1
(j)	17	BONNET STUD	ASME/ASTM (S) A-453 GR. 660, 7/8"-9NC	8
(j)	18	LIFTING RING	ASME/ASTM (S) A-564 GR. 630	1
(j)	19	BONNET NUT	ASME/ASTM (S) A-453 GR. 660, 7/8"-9NC	8
(g)	20	YOKE NUT	ASTM A-194 GR. 2H 1-8N	12
(g)	21	YOKE STUD	ASTM A-193-GR B7 1-8N	12
(k)(g)(f)	22	YOKE	FABRICATED CARBON STEEL	1
(j)	23	PACKING GLAND	ASTM A-564 GR. 630	1
(j)(f)	24	FOLLOW PLATE	ASME/ASTM (S) A-564 GR. 630	1
(j)	25	FOLLOW PLATE NUT	ASME/ASTM (S) A-453 GR. 660, 7/8"-9NC	2
(g)	26	MOUNTING PLATE BOLT	ASTM A-193-GR B7 5/8-11NC	8
(g)	27	MOTOR MOUNTING BOLT	ASTM A-193-GR B7 5/8-11NC	8
(g)	28	MOTOR MOUNTING PLATE	ASTM A-283-GR D	1
(g)	29	MOTOR ACTUATOR	SB-1-15-900 MOTOR SHAFT TO PINION GEAR KEY SHALL BE TYPE 4140 STEEL	1
(h)	30	BODY	ASME SA351 GR CF8M	1
(j)	31	THERMO RELIEF VALVE.	ASME AS-479 TYPE 316	1
(j)	32	LIFT EYES	ASME SA-240 TYPE 316	2
(j)	33	SUPPORT RING	ASME SA-240 TYPE 316	1
(j)	34	PACKING BUSHING	ASTM B-150 ALLOY NO. 630	1
(j)	35	STEM PROTECTOR	ASTM A-105 OR CAST IRON	1
(j)	36	ADAPTER	ASME SA-479 GR. 316	1

REF: 2HV 9378
3HV 9378

NOTES:
(a) RECOMMEND ONE SPARE SET.
(b) PACKING LEAK-OFF IS TO BE ON DOWN STREAM SIDE OF VALVE AS SHOWN.
(c) REFER TO DRAWING W-40658 FOR PACKING SET DETAILS.
(d) HARD SURFACE MATERIAL TO BE IN ACCORDANCE WITH AWS A5.13-70, CLASSIFICATION R-CO07-A.
(e) VALVE OPERATOR WILL BE REMOVED & REINSTALLED ON VALVE IN THE FIELD IN ORDER TO PUT VALVE THROUGH AVAILABLE SLEEVE.
(f) YOKE & FOLLOW PLATE SHOWN 90° OUT OF PLANE.
(g) NON-PRESSURE RETAINING PART ESSENTIAL TO FUNCTION.
(h) ASME SEC. III PRESSURE RETAINING PART.
(i) FOR ACTUATOR ORIENTATION SEE NOTE (1), PG. 2 OF 3.
(j) NON-PRESSURE RETAINING PART NON-ESSENTIAL TO FUNCTION.
(k) PAINT YOKE WITH VALSPAR 76-W-900.

SOUTHERN CALIFORNIA EDISON

DRAWING NUMBER	DESCRIPTION
RS249683	ACF INDUSTRIES

REFERENCES

NO.	DESCRIPTION	DATE	MADE	CHK'D	RE	IRE	FLS	OTHER
6	REDRAWN IN AUTOCAD INCORPORATE DCN'S 3, 4, & 5	08/27/02	JAN	RMB				

REVISIONS

QC 1 UNIT 2 & 3

SAN ONOFRE NUCLEAR GENERATING STATION

10 x 8 x 10 CLASS 1500
MODEL D-2 OPG POW-R-SEAL

SOUTHERN CALIFORNIA EDISON

SO23-507-5-1-139 REV. 6

VALVE RELIEF REQUEST

BEST AVAILABLE COPY
SIGNED: aaMorchere 4-30-04
ORIGINATOR DATE

10 CFR 50.55a Request Number IST-3-V-1 Rev.1
BEST AVAILABLE COPY

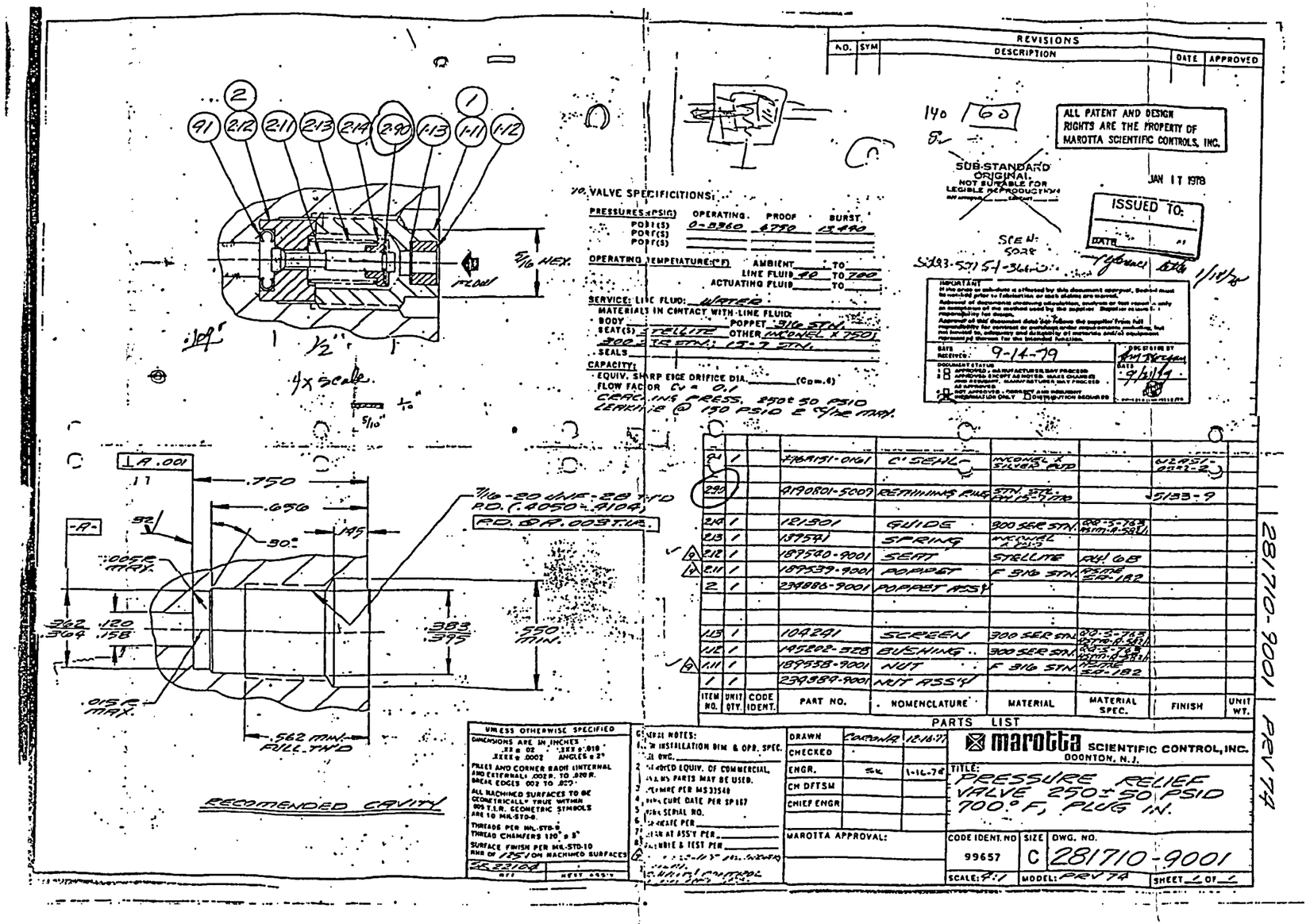

ITEM NO.	UNIT QTY.	CODE IDENT.	PART NO.	NOMENCLATURE	MATERIAL	MATERIAL SPEC.	FINISH	UNIT WT.
94	1		7164131-0161	C' SEAL	INCONEL X SILVER ROD		WZ251-0252-2	
29			9190801-5007	RETAINING RING	STN. STL.		S133-9	
2.14	1		121301	GUIDE	300 SER STN.	QQ-S-763		
2.13	1		137541	SPRING	INCONEL X 750			
2.12	1		189540-9001	SEAT	STELLITE	RH 6B		
2.11	1		189539-9001	POPPET	F 316 STN.	ASTM SP-182		
2	1		234886-9001	POPPET ASS'Y				
1.13	1		104241	SCREEN	300 SER STN.	QQ-S-763		
1.12	1		195202-328	BUSHING	300 SER STN.	QQ-S-763		
1.11	1		189538-9001	NUT	F 316 STN.	ASTM SP-182		
1	1		234889-9001	NUT ASS'Y				

PARTS LIST