PNL-6049 Vol. II
UC-85

# COBRA-SFS: A Thermal-Hydraulic Analysis Computer Code

## Volume II: User's Manual

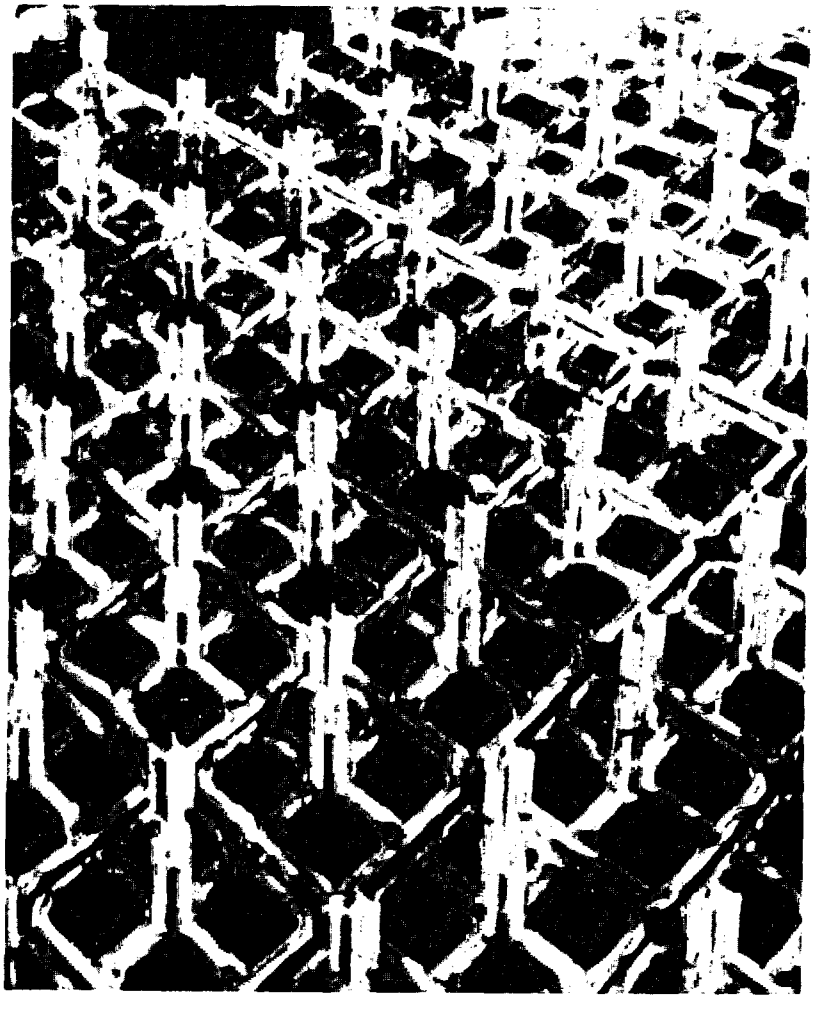

November 1986

Prepared for the U.S. Department of Energy
under Contract DE-AC06-76RLO 1830

Pacific Northwest Laboratory
Operated for the U.S. Department of Energy
by Battelle Memorial Institute

PNL-6049 Vol. II

8902090117 881215
PDR ORG EUSDOE
PDC

## DISCLAIMER

This report was prepared as an account of work sponsored by an agency of the United States Government. Neither the United States Government nor any agency thereof, nor Battelle Memorial Institute, nor any of their employees, makes any warranty, expressed or implied, or assumes any legal liability or responsibility for the accuracy, completeness, or usefulness of any information, apparatus, product, or process disclosed, or represents that its use would not infringe privately owned rights. Reference herein to any specific commercial product, process, or service by trade name, trademark, manufacturer, or otherwise, does not necessarily constitute or imply its endorsement, recommendation, or favoring by the United States Government of any agency thereof, or Battelle Memorial Institute. The views and opinions of authors expressed herein do not necessarly state or reflect those of the United States Government or any agency thereof, or Battelle Memorial Institute.

PACIFIC NORTHWEST LABORATORY
*operated by*
BATTELLE
*for the*
UNITED STATES DEPARTMENT OF ENERGY
*under Contract DE-AC06-76RLO 1830*

Printed in the United States of America
Available from
National Technical Information Service
United States Department of Commerce
5285 Port Royal Road
Springfield, Virginia 22161

NTIS Price Codes
Microfiche A01

Printed Copy

| Pages | Price Codes |
|---|---|
| 001-025 | A02 |
| 026-050 | A03 |
| 051-075 | A04 |
| 076-100 | A05 |
| 101-125 | A06 |
| 126-150 | A07 |
| 151-175 | A08 |
| 176-200 | A09 |
| 201-225 | A010 |
| 226-250 | A011 |
| 251-275 | A012 |
| 276-300 | A013 |

PNL-6049 Vol. II
UC-85

# COBRA-SFS: A THERMAL-HYDRAULIC ANALYSIS COMPUTER CODE

## VOLUME II - USER'S MANUAL

D. R. Rector
J. M. Cuta
N. J. Lombardo
T. E. Michener
C. L. Wheeler

November 1986

Prepared for
the U.S. Department of Energy
under Contract DE-AC06-76RLO 1830

Pacific Northwest Laboratory
Richland, Washington 99352

## ABSTRACT

COBRA-SFS (Spent Fuel Storage) is a general thermal-hydraulic analysis computer code used to predict temperatures and velocities in a wide variety of systems. The code was refined and specialized for spent fuel storage system analyses for the U.S. Department of Energy's Commercial Spent Fuel Management Program.

The finite-volume equations governing mass, momentum, and energy conservation are written for an incompressible, single-phase fluid. The flow equations model a wide range of conditions including natural circulation. The energy equations include the effects of solid and fluid conduction, natural convection, and thermal radiation. The COBRA-SFS code is structured to perform both steady-state and transient calculations; however, the transient capability has not yet been validated.

This volume contains the input instructions for COBRA-SFS and an auxiliary radiation exchange factor code, RADX-1. It is intended to aid the user in becoming familiar with the capabilities and modeling conventions of the code.

## ACKNOWLEDGMENTS

The authors would like to thank the U.S. Department of Energy for sponsoring this work. Thanks are also extended to Darrell Newman, Dale Oden, and Gordon Beeman of Pacific Northwest Laboratory Commercial Spent Fuel Management Program Office (CSFM-PO). The support of Jim Creer of the CFSM/Dry Storage System Performance Evaluation Project was essential to the successful completion of this documentation effort. Finally, thanks go to E. C. Darby, word processor, and T. L. Gilbride, editor, for their efforts in the preparation of this manuscript.

CONTENTS

ABSTRACT . . . . . iii

ACKNOWLEDGMENTS . . . . . v

1.0 INTRODUCTION . . . . . 1.1

2.0 COBRA-SFS INPUT INSTRUCTIONS . . . . . 2.1

2.1 PROBLEM INITIATION DATA . . . . . 2.3

2.2 GROUP PROP - MATERIAL PROPERTIES . . . . . 2.6

2.2.1 Fluid Properties . . . . . 2.6

2.2.2 Solid Material Properties . . . . . 2.7

2.3 GROUP CHAN - FLOW FIELD GEOMETRY . . . . . 2.8

2.3.1 Axial Geometry . . . . . 2.8

2.3.2 Assembly Geometry Description . . . . . 2.9

2.3.3 Lateral Flow Connection Parameters . . . . . 2.12

2.4 GROUP VARY - GEOMETRY VARIATIONS . . . . . 2.13

2.4.1 Channel Area Variations . . . . . 2.13

2.4.2 Lateral Flow Connection Width Variations . . . . . 2.15

2.5 GROUP RODS - FUEL ROD GEOMETRY . . . . . 2.17

2.5.1 Rod Configuration Description . . . . . 2.18

2.5.2 Fuel Material Properties . . . . . 2.20

2.5.3 Temperature-Dependent Fuel Properties . . . . . 2.21

2.5.4 Axial Fuel Variation . . . . . 2.22

2.6 GROUP SLAB - SOLID STRUCTURE GEOMETRY . . . . . 2.24

2.6.1 Solid-to-Solid Thermal Connection Types . . . . . 2.25

2.6.2 Solid Structure Node Description . . . . . 2.27

2.6.3 Solid-to-Fluid Thermal Connection Types . . . . . 2.28

2.6.4 Solid-to-Fluid Connection Description . . . . . 2.29

2.7 GROUP RADG - THERMAL RADIATION EXCHANGE FACTORS . . . . . 2.30

2.7.1 Blackbody Radiation Exchange Factor Types . . . . . 2.31

2.7.2 Blackbody Radiation Exchange Factors . . . . . 2.31

2.7.3 Assembly Radiation Group Information . . . . . 2.34

2.8 GROUP HEAT - HEAT TRANSFER CORRELATIONS . . . . . 2.36

2.8.1 Heat Transfer Coefficient Correlations . . . . . 2.37

2.8.2 Turbulent Mixing . . . . . 2.38

2.8.3 Fluid Conduction . . . . . 2.39

2.9 GROUP DRAG - FRICTION FACTORS AND LOSS COEFFICIENTS . . . . 2.40

2.9.1 Friction Factor Correlations . . . . . 2.41

2.9.2 Local Loss Coefficients . . . . . 2.42

2.9.3 Loss Coefficient Forcing Functions . . . . . 2.44

2.9.4 Losses for Network Model . . . . . 2.45

2.9.5 Local Blockages . . . . . 2.47

2.10 GROUP BDRY - THERMAL BOUNDARY CONDITIONS . . . . . 2.49

2.10.1 Thermal Boundary Connection Types . . . . . 2.50

2.10.2 Boundary Axial Temperature Profiles . . . . . 2.51

2.10.3 Side Thermal Boundary Connections . . . . . 2.52

2.10.4 Plenum Boundary Connections . . . . . 2.54

2.11 GROUP OPER - OPERATING CONDITIONS . . . . . 2.58

2.11.1 Operating Conditions . . . . . 2.60

2.11.2 Nonuniform Operating Parameter Distributions . . . . 2.61

2.11.3 Transient Forcing Function Tables . . . . . 2.63

2.11.4 Axial Heat Generation Profiles . . . . . 2.66

2.12 GROUP CALC - CALCULATIONAL PARAMETERS . . . . . 2.68

2.13 GROUP OUTP - OUTPUT OPTIONS . . . . . 2.71

2.13.1 Channels to be Printed . . . . . 2.73

2.13.2 Rods to be Printed . . . . . 2.74

2.13.3 Lateral Flow Connections to be Printed . . . . . 2.74

2.13.4 Solid Nodes to be Printed . . . . . 2.75

2.13.5 Transient Output Interval . . . . . 2.75

3.0 COBRA-SFS USER'S GUIDE . . . . . 3.1

3.1 MATERIAL PROPERTIES . . . . . 3.1

3.2 PROBLEM GEOMETRY . . . . . 3.2

3.2.1 Flow Field Geometry . . . . . 3.5

3.2.2 Rod Geometry . . . . . 3.13

3.2.3 Solid Structure Geometry . . . . . 3.19

3.2.4 Radiation Groups . . . . . 3.24

3.2.5 Coarse Channel Modeling . . . . . 3.27

3.3 CONSTITUTIVE MODELS . . . . . 3.32

3.3.1 Heat Transfer Correlations . . . . . 3.32

3.3.2 Friction Factors and Loss Coefficient . . . . . 3.35

3.4 BOUNDARY CONDITIONS . . . . . 3.43

3.4.1 Thermal Boundary Conditions . . . . . 3.43

3.4.2 Operating Conditions and Transient Forcing Functions . . . . . 3.49

3.5 CODE CONTROL PARAMETERS . . . . . 3.52

3.5.1 Calculational Parameters . . . . . 3.52

3.5.2 Output Options . . . . . 3.54

4.0 DIMENSION PARAMETERS . . . . . 4.1

5.0 COBRA-SFS FEATURES . . . . . 5.1

5.1 OVERALL CODE DESCRIPTION . . . . . 5.1

5.1.1 Input Subroutines . . . . . 5.3

5.1.2 Solution of the Conservation Equations . . . . . 5.3

5.2 ADDITIONAL DATA STORAGE OPTION . . . . . 5.5

5.3 DUMP AND RESTART . . . . . 5.8

5.4 CODE CONVERSION . . . . . 5.10

6.0 RADX-1 - RADIATION EXCHANGE FACTOR GENERATOR . . . . . 6.1

7.0 SAMPLE PROBLEMS . . . . . 7.1

7.1 SAMPLE PROBLEM 1: THERMAL ANALYSIS OF A HYPOTHETICAL SPENT FUEL CASK . . . . . 7.1

7.1.1 COBRA-SFS Model for the Sample Spent Fuel Cask . . . 7.3

7.1.2 Results for Sample Problem 1 . . . . . 7.16

7.2 SAMPLE PROBLEM 2: THERMAL ANALYSIS OF A TEST LOOP MODULE . 7.22

7.2.1 COBRA-SFS Model . . . . . 7.23

7.2.2 Results for Sample Problem 2. . . . . 7.27

8.0 REFERENCES . . . . . 8.1

APPENDIX A - SUBROUTINE DESCRIPTIONS . . . . . A.1

APPENDIX B - VARIABLE DESCRIPTIONS . . . . . B.1

APPENDIX C - COMDECK LISTING . . . . . C.1

APPENDIX D - INPUT/OUTPUT FILES FOR COBRA-SFS . . . . . D.1

APPENDIX E - SAMPLE PROBLEM NUMBER 1 OUTPUT. . . . . E.1

APPENDIX F - SAMPLE PROBLEM NUMBER 2 OUTPUT. . . . . F.1

## FIGURES


3.1 Cut-away Sketch of a Typical Spent Fuel Cask . . . . . 3.3

3.2 COBRA-SFS Model of a Spent Fuel Cask . . . . . 3.4

3.3 Subchannel Control Volume . . . . . 3.8

3.4 Subchannel Nodalization of a Typical 8x8 BWR Spent Fuel Assembly . . . . . 3.9

3.5 Subchannel Nodalization of an 8x8 BWR Spent Fuel Assembly with Symmetry Along the Diagonal . . . . . 3.10

3.6 Transverse Flow Control Volume . . . . . 3.11

3.7 COBRA-SFS Finite-Difference Fuel Rod Model with Central Void . . 3.15

3.8 COBRA-SFS Finite-Difference Fuel Rod Model Without Central Void . . . . . 3.16

3.9 Rod Configuration for a Typical 8x8 BWR Spent Fuel Assembly . . 3.17

3.10 Rod Configuration for an 8x8 Spent Fuel Assembly with Symmetry Along the Diagonal . . . . . 3.18

3.11 Solid-to-Solid Thermal Connection Schematics . . . . . 3.21

3.12 Radiation Surface Locations Around a Typical 8x8 BWR Assembly . 3.28

3.13 Radiation Surface Locations Around a Half-Symmetry 8x8 BWR Assembly . . . . . 3.29

3.14 Lumped Channels . . . . . 3.30

3.15 Friction Factor Correlation for Rods in a Square Array as a Function of Pitch-to-Diameter Ratio . . . . . 3.38

3.16 Friction Factor Correlation for Rods in a Triangular Array as a Function of Pitch-to-Diameter Ratio . . . . . 3.39

3.17 Schematic Description of the Network Model for Pressure Drop Through a Storage System . . . . . 3.41

4.1 Subchannel Geometries Illustrating Second-Order Thermal Connections. . . . . 4.5

5.1 Flow Chart for COBRA . . . . . 5.2

5.2 Flow Chart for Subroutine RECIRC . . . . . 5.4

6.1 Radiation Surface Locations for a Full 8x8 Rod Bundle . . . . . 6.3

6.2 Radiation Surface Locations for a Half 8x8 Rod Bundle with Symmetry Along the Diagonal . . . . . 6.4

6.3 Radiation Surface Locations for a 15x15 Rod Bundle with Eighth Symmetry . . . . . 6.5

7.1 Geometry of a Sample Cask . . . . . 7.2

7.2 COBRA-SFS Model of Sample Cask . . . . . 7.4

7.3 Cask Plenum Heat Transfer Model . . . . . 7.13

7.4 Axial Geometry of Test Loop Module . . . . . 7.23

7.5 Cross Section of Fuel Assembly Region for FSP-2 Loop Module . . 7.24

## TABLES


2.1 Input Group Descriptions . . . . . 2.2

3.1 Solid Conduction Geometry Factor Definitions . . . . . 3.22

3.2 Natural Convection Heat Transfer Expressions . . . . . 3.46

5.1 SAVEAL Array Equivalencing for Level-by-Level Solution . . . . . 5.7

5.2 Roll Option Utility Arrays . . . . . 5.8

5.3 SAVEAL Array Equivalencing for the Pressure Solution . . . . . 5.8

7.1 Channel Geometry for Sample Cask . . . . . 7.5

7.2 Solid-to-Solid Connection Types for Sample Cask . . . . . 7.7

7.3 Solid-to-Fluid Connection Types for Sample Cask . . . . . 7.9

7.4 Blackbody Radiation Exchange Factors for Cask Sample Problem . 7.11

7.5 Heat Transfer Surfaces for Radiation Exchange Factor Groups . . 7.12

7.6 Boundary Types for Sample Cask . . . . . 7.14

7.7 Side Boundary Connections for Sample Cask . . . . . 7.15

7.9 Input for Sample Problem 1 . . . . . 7.17

7.10 Flow Geometry for Test Section Model . . . . . 7.22

7.11 Axial Variation of Flow Geometry in Assembly 1 . . . . . 7.26

7.12 Radial Heat Generation Distribution for Sample Problem 2 . . . . 7.27

7.13 Solid-to-Solid Connection Types for Sample Problem 2 . . . . . 7.28

7.14 Solid-to-Fluid Connection Types for Sample Problem 2 . . . . . 7.29

7.15 Input for Sample Problem 2 . . . . . 7.30

## NOMENCLATURE

### SYMBOLS AND NOTATIONS

$\beta$ - coefficient of thermal expansion ($°F^{-1}$)

$\epsilon$ - surface emittance

$\mu$ - viscosity (lbm/ft-s)

$\rho$ - density ($lbm/ft^3$)

$\sigma$ - Stephan-Boltzmann constant ($Btu/h\text{-}ft^2\text{-}R^4$)

$\ell$ - length of transverse momentum control volume (ft)

A - area ($ft^2$) or aspect ratio

$C_D$ - local loss coefficient

D - diameter (ft)

$D_h$ - hydraulic diameter (ft)

f - friction factor

F - blackbody viewfactor

$F_G$ - geometry factor

g - acceleration due to gravity ($ft/s^2$)

Gr - Grashof number

H - heat transfer coefficient ($Btu/s\text{-}ft^2\text{-}°F$)

k - thermal conductivity (Btu/s-ft-°F)

L - characteristic length (ft)

m - mass flow rate (lbm/s)

Pr - Prandtl number

q" - heat flux ($Btu/s\text{-}ft^2$)

r - radius (ft)

R - thermal resistance (s-ft-°F/Btu)

Re - Reynolds number

S - transverse gap width (ft)

T - temperature (°F)

$W_T$ - crossflow due to turbulent exchange (lbm/s-ft)

W - width (ft)

Subscripts

i - reference node number

k - transverse gap number

COBRA-SFS: A THERMAL-HYDRAULIC ANALYSIS COMPUTER CODE
VOLUME II - USER'S MANUAL

# 1.0 INTRODUCTION

COBRA-SFS (Spent Fuel Storage) is a general computer code that can be used to evaluate the thermal-hydraulic performance of a wide variety of systems. Even though the code was refined and specialized for spent fuel storage system analyses, it is designed to predict flow and temperature distributions under a wide range of flow conditions, including mixed and natural convection. The COBRA-SFS code is structured to perform both steady-state and transient calculations; however, the transient capability has not yet been validated.

COBRA-SFS is a single-phase flow computer code based on the strengths of the COBRA code series (Rowe 1973, Wheeler et al. 1976, Stewart et al. 1977, George et al. 1980). The equations governing mass, momentum, and energy conservation for incompressible flows are solved using a semi-implicit method similar to that used in COBRA-WC (George et al. 1980) that allows recirculating flows to be predicted. The lumped, finite-volume nodalization used in COBRA-SFS allows a great deal of flexibility in modeling a wide variety of geometries.

In addition to the many features of previous COBRA codes, COBRA-SFS has several features that are specific to spent fuel storage analyses:

- a solution method that calculates three-dimensional conduction heat transfer through a solid structure network such as a spent fuel cask basket or cask body
- a detailed radiation heat transfer model that calculates radiation on a detailed rod-to-rod basis
- thermal boundary conditions to model radiation and natural convection heat transfer from storage system surfaces
- a total flow boundary condition that automatically adjusts the pressure field to yield the specified total flow for a system.

The documentation of the COBRA-SFS code consists of three separate volumes. The input instructions and guidance in applying the code are presented in this volume, Volume II: User's Manual. In Volume I: Mathematical Models and Solution Method (Rector et al. 1986a), the theory behind the code is described. An extensive effort to validate the COBRA-SFS code was performed using data from single-assembly and multiassembly storage system tests (Cuta and Creer 1986; Rector et al. 1986; Wiles et al. 1986). Results of this effort using the documented version of COBRA-SFS are presented in Volume III: Validation Assessments (Lombardo et al. 1986).

## 2.0 COBRA-SFS INPUT INSTRUCTIONS

The input instructions for COBRA-SFS are provided in this section. The code input is listed line by line, with a definition of each input variable. Each set of instructions is proceeded by an explanatory paragraph. However, users unfamiliar with COBRA-SFS should refer to Section 3.0, User's Guide, for a more complete explanation of the input requirements before attempting to set up the data for a specific problem.

COBRA-SFS input is organized into groups identified by unique four-character flags. The groups are defined by function and reflect a generalized logical approach to setting up input for a problem. To solve a problem, four basic inputs need to be provided: 1) the physical properties of the solid materials and working fluid, 2) the geometry, 3) the constitutive models for the flow and heat transfer solutions, and 4) the boundary conditions. In addition, code parameters controlling the numerical solution and code output are required. The various input groups and their descriptions are listed in Table 2.1. Note that many of the input groups are optional.

The information required to initiate a COBRA-SFS calculation is described in Section 2.1. The fluid and solid material properties are read in group PROP, which is described in Section 2.2. Input group PROP is not optional; properties of the fluid must be applied in all cases.

The geometry of the problem is described in required group CHAN, and in optional groups VARY, RODS, SLAB, and RADG. The flow field geometry, described in input group CHAN, defines the flow regions within the problem. This input group is described in Section 2.3. Group VARY can be used to describe variations of flow channel areas and connections with respect to axial location. This optional input group is described in Section 2.4. The fuel rod geometry input in group RODS is required only if there are heat generating rods in the problem. The input for this group is described in Section 2.5. Section 2.6 describes the input for optional group SLAB,

TABLE 2.1. Input Group Descriptions

| SECTION | PROPERTIES |
|---|---|
| 2.2 | Group PROP - Material Properties |
| | PROBLEM GEOMETRY |
| 2.3 | Group CHAN - Flow Field Geometry |
| 2.4 | Group VARY - Geometry Variations (Optional) |
| 2.5 | Group RODS - Fuel Rod Geometry (Optional) |
| 2.6 | Group SLAB - Solid Structure Geometry (Optional) |
| 2.7 | Group RADG - Thermal Radiation Exchange Factors (Optional) |
| | CONSTITUTIVE MODELS |
| 2.8 | Group HEAT - Heat Transfer Correlations |
| 2.9 | Group DRAG - Friction Factors and Loss Coefficients |
| | BOUNDARY CONDITIONS |
| 2.10 | Group BDRY - Thermal Boundary Conditions (Optional) |
| 2.11 | Group OPER - Operating Conditions |
| | CODE CONTROL |
| 2.12 | Group CALC - Calculational Parameters |
| 2.13 | Group OUTP - Output Options |

which is used to describe heat-conducting solid structures in the system. When thermal radiation is modeled, the geometric viewfactor information in group RADG is required input. This group is described in Section 2.7.

The constitutive models required by the energy and flow field solutions are described in groups HEAT and DRAG, respectively. The input for group HEAT, described in Section 2.8, specifies the heat transfer correlations used in the energy equations. The input for group DRAG, described in Section 2.8, specifies the friction factor correlations and pressure loss coefficients used in the momentum equations.

The boundary conditions for the problem are described in groups BDRY and OPER. The input for group BDRY, described in Section 2.10, defines the thermal

boundary conditions applied to the problem. The input for group OPER, described in Section 2.11, defines the boundary conditions for the flow solution and the transient forcing functions.

The parameters controlling various functions of the code are read in groups CALC and OUTP. The input for group CALC, described in Section 2.12, defines the parameters controlling the numerical solution procedure. The input for group OUTP, described in Section 2.13, defines the parameters controlling the various output options.

Input is terminated by entering ENDD for the group flag. This signals the code to stop looking for additional input groups.

It is recommended that the input instructions be read through and entirely understood before attempting to set up the input for a particular problem. It is important for the user to have a reasonably complete picture of the overall structure of the COBRA-SFS input, as it will give order to the large array of options available.

The general format of the input instructions is to give a complete description of all variables in each line of input, including the format for reading the data. Some input lines are repeated, and some groups of lines are repeated in a set sequence. These repetitive patterns are called out in the instructions, both in the format for the line and in the descriptive text accompanying the input. In many instances, later input will depend on values specified in earlier input lines. These flags are noted on the input line, with a reference to the line where the flag was defined. For example, the variable defining the number of channels, NCHANA, is read on input line CHAN.4. In all subsequent instructions that refer to NCHANA, the origin of this flag is denoted by specifying the variable as NCHANA[CHAN.4].

## 2.1 PROBLEM INITIATION DATA

The input records COBRA.1 and COBRA.3 are required at the beginning of every COBRA-SFS input file. COBRA.1 defines the execution time alloted for the problem, and offers the user the opportunity to restart a previously executed problem from the TAPE8 restart dump. COBRA.3 allows the user to

give the problem a name and number for future identification. If a restart is flagged, COBRA.2 must also be read, to define the restarted calculation. (Section 5.3 contains a detailed explanation of the restart option.)

COBRA.1 MAXT,IECHO
FORMAT(2I5)

| Columns | Variable | Description |
|---|---|---|
| 1-5 | MAXT | The computer time limit, in system seconds, for problem execution. For restart cases, enter MAXT as a negative number; (ABS(MAXT) will be used to define the time limit.) (Note: The value entered for MAXT cannot supersede any execution time limit specified by the computer operating system. The user must ascertain that these time limits are compatible.) |
| 6-10 | IECHO | Flag for printout of input file:<br>= 0; the input file will be printed on the output file (default).<br>= 1; the input file will not be printed on the output file. |

COBRA.2 NJUMP,NA,IT,NTT,TTT Read only if MAXT < 0 on COBRA.1
FORMAT(4I5,F5.0)

| Columns | Variable | Description |
|---|---|---|
| 1-5 | NJUMP | Flag for restart calculation:<br>= 0; continue calculation from previous steady state or transient; do not read additional input.<br>= 1; define a new problem with a previous calculation as first guess; new input will be read in.<br>= 2; print information on the restart file from the previous calculation. |

| Columns | Variable | Description |
|---|---|---|
| 6-10 | NA | Number of additional iterations, for restart of a steady-state calculation. (Note: If continuing with a transient, this variable is not used. If restarting with NJUMP = 1, the value for NA can be overridden by entering a new value for NTRIES on CALC.3.) |
| 11-15 | IT | Flag to initiate a transient restart:<br>= 0; restart a steady-state solution to continue iterating, or for a restart to continue a previous transient calculation.<br>= 1; start a transient calculation beginning at time zero from previous steady-state solution. (Note: Transient data must be defined by reading new input for group CALC in this case.) |
| 15-20 | NTT | Number of transient time steps for the restarted calculation. |
| 21-25 | TTT | Total transient time (seconds) for the restarted calculation. |

**COBRA.3** KASE,J1,(TEXT(I),I=1,17)

FORMAT(2I5,17A4)

| Columns | Variable | Description |
|---|---|---|
| 1-5 | KASE | Case number. |
| 6-10 | J1 | Print option for input data:<br>= 0; print only new input data.<br>= 1; print all input data.<br>= 2; print only operating conditions (from group OPER).<br>= 10; print all input data, then stop execution. |
| 11-78 | TEXT(I) | Title for problem identification (will be printed at top of each page in the output file; maximum of 68 characters). |

## 2.2 GROUP PROP - MATERIAL PROPERTIES

This group is used to define thermodynamic and heat transfer properties for the coolant and solid materials included in the problem. Properties can be specified for only one coolant, but any number of solid material properties can be specified in a problem. Section 3.1 contains a detailed discussion of the material properties input. Properties for the coolant (PROP.2) are required; properties for solid materials (PROP.3) are optional.

PROP.1 AGROUP,NPROP,NSPROP
FORMAT(A4,1X,2I5)

| Columns | Variable | Description |
|---|---|---|
| 1-4 | AGROUP | Enter PROP |
| 6-10 | NPROP | Number of elements in fluid properties table. |
| 11-15 | NSPROP | Number of solid materials for which properties will be entered on PROP.3. |

### 2.2.1 Fluid Properties

Properties are entered as saturated liquid values for the pressure PLIQ(I) if the coolant is a liquid. Properties are entered for temperature at the system pressure (which is specified in OPER.2) if the coolant is a gas, and variable PLIQ(I) is not used. Fluid properties for at least two reference temperatures are required for interpolation.

PROP.2 (PLIQ(I),TEMLIQ(I),HLIQ(I),CONLIQ(I),CPLIQ(I),VLIQ(I),VISLIQ(I),
I=1,NPROP[PROP.1])
FORMAT(7E10.5)

| Columns | Variable | Description |
|---|---|---|
| 1-10 | PLIQ(I) | Saturation pressure for liquid coolant (psia). (Note: PLIQ(I) is not used when coolant is a gas.) |
| 11-20 | TEMLIQ(I) | Temperature (°F). |

| Columns | Variable | Description |
|---|---|---|
| 21-30 | HLIQ(I) | Enthalpy (Btu/lbm). |
| 31-40 | CONLIQ(I) | Thermal conductivity (Btu/h-ft-°F). |
| 41-50 | CPLIQ(I) | Specific heat (Btu/lbm-°F). |
| 51-60 | VLIQ(I) | Specific volume ($ft^3$/lbm). |
| 61-70 | VISLIQ(I) | Viscosity (lbm/ft-h). |

*** PROP.2 is read NPROP[PROP.1] times ***

### 2.2.2 Solid Material Properties

Solid material properties are specified for NSPROP[PROP.1] materials. This input is optional, and is read only if NSPROP > 0. Properties are assumed constant for all temperatures in this version of the code. The material type number is used to identify the material properties of the various solid structure nodes input in group SLAB and BDRY. Material property types must be numbered sequentially from 1 to NSPROP.

PROP.3 (AMAT(I),ANAME(I),CPSOL(I),RHOSOL(I),CONSOL(I),I=1,NSPROP[PROP.1])
Read only if NSPROP > 0 on PROP.1
FORMAT (I5,A5,3E10.0)

| Columns | Variable | Description |
|---|---|---|
| 1-5 | AMAT(I) | Solid material type identification number. |
| 6-10 | ANAME(I) | Solid material name (for user convenience). |
| 11-20 | CPSOL(I) | Specific heat (Btu/lbm-°F) (for transient calculations). |
| 21-30 | RHOSOL(I) | Density (lbm/$ft^3$) (for transient calculations). |
| 31-40 | CONSOL(I) | Thermal conductivity (Btu/h-ft-°F). |

*** PROP.3 is read NSPROP[PROP.1] times ***

## 2.3 GROUP CHAN - FLOW FIELD GEOMETRY

This group is read to define the flow field geometry model. The flow field is modeled as an array of flow channels that can communicate laterally by crossflow. The flow field is divided into assemblies. An assembly is defined as a group of channels that may communicate laterally with each other but do not communicate directly with other assemblies. Section 3.2.1 contains a detailed discussion of flow field modeling conventions used in COBRA-SFS.

### 2.3.1 Axial Geometry

The axial geometry of the channel region is defined by the axial length, Z, entered on CHAN.2, and the number of axial nodes, NDX, entered on CHAN.1. A uniform axial node size is calculated in the code as DX = Z/NDX, however, the user has the option of specifying axial nodes of varying sizes, by setting NAZONE on CHAN.1 and reading in a variable axial node size table on CHAN.3.

CHAN.1 AGROUP,NASSEM,NDX,NAZONE
FORMAT(A4,1X,3I5)

| Columns | Variable | Description |
|---|---|---|
| 1-4 | AGROUP | Enter CHAN |
| 6-10 | NASSEM | Number of assemblies. |
| 11-15 | NDX | Number of axial nodes. |
| 16-20 | NAZONE | Flag for variable axial node sizes:<br>= 0; uniform axial nodes.<br>> 0; number of regions in variable axial node size table (read on CHAN.3). |

CHAN.2 Z,THETA
FORMAT(2F10.5)

| Columns | Variable | Description |
|---|---|---|
| 1-10 | Z | Axial length of the channel region (inches). |
| 11-20 | THETA | Channel orientation, in degrees from vertical. (Default is 0.0. Used to calculate gravity term in axial momentum equation. Note: This does not affect the lateral flow calculation. For this version there are no gravity terms in the lateral momentum equation.) |

CHAN.3 (NSTEPS(I),VDX(I),I=1,NAZONE) Read only if NAZONE > 0 on CHAN.1
FORMAT(8(I5,E5.0))

| Columns | Variable | Description |
|---|---|---|
| 1-5, 11-15, etc. | NSTEPS(I) | Number of nodes in zone I. (The total number of nodes must be NDX, specified on CHAN.1.) |
| 6-10, 16-20, etc. | VDX(I) | Axial node length (inches) in zone I. (The sum of all nodes must be equal to Z on CHAN.2.) |

### 2.3.2 Assembly Geometry Description

The input lines CHAN.4 through CHAN.6 are read through NASSEM[CHAN.1] times, once for each assembly. CHAN.4 is read to define the assembly number and the assembly type number. Each assembly must have a unique number (1 through NASSEM), but any number of assemblies can have the same geometry and, therefore the same type number. An assembly type is defined by the number of channels and their interconnections, as specified by input on CHAN.6. The assembly type geometry data is entered only once, for the first assembly of that type. For subsequent assemblies of that type, it is not necessary to enter CHAN.6; the value entered for ITYPA on CHAN.4 will be automatically recognized as a previously defined type, and the geometry data copied into the appropriate arrays. Section 3.2.1 contains a detailed discussion of the

geometry modeling conventions used in COBRA-SFS to define assemblies, channels, and connections.

The flow and heat transfer correlations to be used in an assembly, and the axial heat generation profile table (if the assembly contains heated rods) are identified by input on CHAN.5.

**CHAN.4** NASS,ITYPA,NCHANA,INTAPE
FORMAT(4I5)

| Columns | Variable | Description |
|---|---|---|
| 1-5 | NASS | Assembly number. |
| 6-10 | ITYPA | Assembly type number (corresponding to a channel geometry description entered on CHAN.6). |
| 11-15 | NCHANA | Number of channels in assembly NASS. |
| 16-20 | INTAPE | Flag for I/O unit source of the channel input (CHAN.6) for assembly NASS:<br>= 0; read from the input file<br>= N; read from I/O unit N. |

**CHAN.5** NAFLX(NASS),NFLMC(NASS),NHFVT(NASS),NPFVT(NASS),MDFLT(NASS)
FORMAT(5I5)

| Columns | Variable | Description |
|---|---|---|
| 1-5 | NAFLX(NASS) | Identification number of the axial heat flux profile table [specified on OPER.16] for assembly NASS. (Default is 1.) |
| 6-10 | NFLMC(NASS) | Identification number of the heat transfer coefficient correlation [specified on HEAT.2] for assembly NASS. (Default is 1.) |
| 11-15 | NHFVT(NASS) | Identification number of the heat generation versus time forcing function [specified on OPER.15] to use in assembly NASS during a transient. (Default is 0; initial value is used throughout the transient.) |

| Columns | Variable | Description |
|---|---|---|
| 16-20 | NPFVT(NASS) | Identification number of the pressure drop or flow versus time forcing function [specified on OPER.11] for assembly NASS. (Default is 0; initial value is used throughout the transient.) |
| 21-25 | MDFLT(NASS) | Identification number for the subchannel friction factor correlation [specified on DRAG.2], to be used in assembly NASS. (Default is 1.) Note: This value can be superseded in a given channel by specifying a nonzero value for N on CHAN.6 for individual channel of this assembly type. |

**CHAN.6** (N,I,AC(I),PW(I),PH(I),(LC(I,L),GAPS(I,L),DIST(I,L),L=1,4), I=1,NCHANA[CHAN.4])

Read only if assembly type ITYPA[CHAN.2] has not been defined by previous input

FORMAT(I1,I4,3E5.3,4(I5,2E5.2))

| Columns | Variable | Description |
|---|---|---|
| 1 | N | Identification number of friction factor correlation (must correspond to a correlation entered in Group DRAG). If blank or zero, type MDFLT(NASS), defined on CHAN.5, is assigned. |
| 2-5 | I | Channel identification number (1 to NCHANA[CHAN.4]). |
| 6-10 | AC(I) | Channel nominal area (in.$^2$). |
| 11-15 | PW(I) | Channel nominal wetted perimeter (in.). |
| 16-20 | PH(I) | Channel nominal heated perimeter (in.). |
| 21-25<br>36-40,<br>51-55,<br>66-70 | LC(I,L) | Identification number of adjacent channel for the Lth connection to channel I, where LC(I,L) > I. (Each connection should be identified only once, as a connection from the lower-numbered channel to the higher-numbered channel.) |
| 26-30,<br>41-45,<br>56-60,<br>71-75 | GAPS(I,L) | Width of flow connection between channel I and channel LC(I,L), in inches. |

| Columns | Variable | Description |
|---|---|---|
| 31-35, 46-50, 61-65, 76-80 | DIST(I,L) | Transverse control volume length (in.) between channel I and channel LC(I,L). (Note: This input is optional. It is used to define the transverse length of the momentum cell and also the conduction length in the transverse direction. A default value for this distance can be defined for all flow connections by specifying the variable SL on CHAN.7. If this option is chosen, DIST(I,L) can be entered as zero.) |

*** CHAN.6 is read NCHANA[CHAN.4] times for a given assembly type ***

*** CHAN.4 through CHAN.6 are read sequentially NASSEM[CHAN.1] times ***

### 2.3.3 Lateral Flow Connection Parameters

The input for CHAN.6 defines any lateral flow connections for the channels in the various assemblies. The flow solution for these connections requires parameters to define the crossflow resistance and the nominal geometry of the lateral control volume. This input is read on CHAN.7. The values entered apply uniformly to all gaps in all assemblies. If there are no lateral flow connections, enter a blank line for CHAN.7.

CHAN.7 KIJ,SL
FORMAT(2E5.0)

| Columns | Variable | Description |
|---|---|---|
| 1-5 | KIJ | Flow resistance through lateral connection between channels. (Default is 0.5: enter zero if there are no lateral flow connections.) |
| 6-10 | SL | Width-to-length ratio for transverse momentum control volume. (Note: This is used only if DIST is entered as zero on CHAN.6. Default is 0.5.) |

## 2.4 GROUP VARY - GEOMETRY VARIATIONS

This group is used to specify axial variations in channel flow area and lateral flow connection width. It is optional. If this group is not used, all channel areas and lateral flow connection widths are assumed constant over the entire axial length.

VARY.1 AGROUP,NAFACT,NAXL,NARAMP,NGAPS,NGXL
FORMAT(A4,1X,5I5)

| Columns | Variable | Description |
|---|---|---|
| 1-4 | AGROUP | Enter VARY |
| 6-10 | NAFACT | Number of channels with area variations. |
| 11-15 | NAXL | Number of axial locations for channel area variations. All area variation tables use the same table of axial locations. |
| 16-20 | NARAMP | Number of iterations for gradual insertion of area variations into the calculation. (Default is 1.) |
| 21-25 | NGAPS | Number of lateral flow connections for which the width varies axially. |
| 26-30 | NGXL | Number of axial locations for lateral flow connection width variations. All width variation tables use the same axial locations. |

### 2.4.1 Channel Area Variations

The channel area variations, specified by input on VARY.2 through VARY.4, are read only if NAFACT and NAXL on VARY.1 are both greater than zero. VARY.2 is read once to define the axial locations of the area variations, then the input lines VARY.3 and VARY.4 are read sequentially, NAFACT times. On each cycle, line VARY.3 is read to specify the assembly number and index number of each channel in that assembly that has area variations, then VARY.4 is read to define the area variation in that channel.

**VARY.2** (AXL(J),J=1,NAXL[VARY.1]) Read only if NFACT > 0 and NAXL > 0 on VARY.1

FORMAT(12F5.3)

| Columns | Variable | Description |
|---|---|---|
| 1-5, 6-10, etc. | AXL(J) | Relative axial locations (x/L) of the Jth channel area variation. |

**VARY.3** NASS,I Read only if NAFACT > 0 and NAXL > 0 on VARY.1

FORMAT(2I5)

| Columns | Variable | Description |
|---|---|---|
| 1-5 | NASS | Identification number of assembly containing channel I. |
| 6-10 | I | Identification number of channel for which area variations are being specified. |

**VARY.4** (AFACT(L,J),J=1,NAXL[VARY.1]) Read only if NAFACT > 0 and NAXL > 0 on VARY.1

FORMAT(12F5.3)

| Columns | Variable | Description |
|---|---|---|
| 1-5, 6-10 etc. | AFACT(L,J) | Channel area variation factor ($A_{ij}/AC_i$) for the Lth area variation table at axial level AXL(J), as defined on VARY.2. (Note: Area variation factor tables are numbered sequentially, in the order they are read in on VARY.4. Index L of AFACT is 1 to NAFACT.) |

*** VARY.3 and VARY.4 are read sequentially NAFACT[VARY.1] times ***

### 2.4.2 Lateral Flow Connection Width Variations

The flow connection width variations specified on VARY.5 through VARY.7 are read only if NGAPS and NGXL on VARY.1 are both greater than zero. This input follows the same pattern used in defining the channel area variations. VARY.5 is read once to define the axial locations where width variations occur. Then VARY.6 and VARY.7 are read sequentially NGAPS times. Each time VARY.6 is read to define, by assembly number and index number, a lateral flow connection that has varying width, then VARY.7 is read to define the width variations for that connection. The numbering convention for lateral flow connections is described in Section 3.2.1.2.

**VARY.5** (GAPXL(J),J=1,NGXL[VARY.1]) Read only if NGXL > 0 and NGAPS > 0 on VARY.1
FORMAT(12F5.3)

| Columns | Variable | Description |
|---|---|---|
| 1-5, 6-10, etc. | GAPXL(J) | Relative axial location (x/L) of the Jth flow connection width variation. |

**VARY.6** NASS,K Read only if NGXL > 0 and NGAPS > 0 on VARY.1
FORMAT(2I5)

| Columns | Variable | Description |
|---|---|---|
| 1-5 | NASS | Identification number of assembly containing lateral flow connection K. |
| 6-10 | K | Identification number of lateral flow connection with width variation. |

**VARY.7** (GFACT(L,J),J=1,NGXL[CHAN.1]) Read only if NGXL > 0 and NGAPS > 0 on VARY.1

FORMAT(12F5.3)

| Columns | Variable | Description |
|---|---|---|
| 1-5, 6-10, etc. | GFACT(L,J) | Flow connection width variation factor ($GAP_{kj}/GAPS_k$) for the Lth variation table at axial level GAPXL(J), as specified on VARY.5. (Note: Width variation tables are numbered sequentially in the order they are read in on VARY.7. Index L of GFACT(L,J) is 1 to NGAPS.) |

*** VARY.6 and VARY.7 are read sequentially NGAPS[VARY.1] times ***

## 2.5 GROUP RODS - FUEL ROD GEOMETRY

This group is read to define the geometry and material properties for the fuel rods contained in the assemblies defined in group CHAN. The rods are specified by configuration type, where a configuration type is defined by the number of rods in the assembly, the individual rod diameters, radial heat generation factors, fuel types, and channel connections for heat transfer. Section 3.2.2 contains a detailed discussion of the rod geometry modeling options in COBRA-SFS.

Material properties for the fuel rods are specified by type. For rod type 1, the fuel properties can be temperature-dependent, and the user also has the option of specifying different materials for different axial zones in the fuel. However, all other fuel types have material properties that are constant with temperature, and axially uniform.

RODS.1 AGROUP,NC,NFUELT,NQAX,NRODTP,NTHETA
FORMAT(A4,1X,5I5)

| Columns | Variable | Description |
|---|---|---|
| 1-4 | AGROUP | Enter RODS |
| 6-10 | NC | Order of approximation used in the fuel model:<br>= 0; no fuel model.<br>= 1; only the rod cladding is modeled (applicable to steady state only, needed for rod-to-rod radiation).<br>> 4; fuel model with (NC-1) finite-difference nodes in the fuel, and one node in the cladding. |
| 11-15 | NFUELT | Number of fuel types for which thermal properties are to be specified. (Not used if NC = 0.) |

| Columns | Variable | Description |
|---|---|---|
| 16-20 | NQAX | Flag for temperature dependent fuel properties:<br>= 0; constant fuel properties for all fuel types.<br>= 1; temperature-dependent fuel properties for fuel type 1 only (available only if NC > 4). |
| 21-25 | NRODTP | Number of rod configuration types with axially varying fuel rods. (Applicable only if NC > 4.) |
| 26-30 | NTHETA | Number of circumferential nodes in a fuel rod. (Default is 1. Warning: the radiation viewfactors input in group RADG must be consistent with this input variable. Refer to Section 3.2.2.1 for a complete discussion of this parameter. |

### 2.5.1 Rod Configuration Description

Rods contained within the assemblies are defined by rod configuration type. A rod configuration type is determined by the number of rods contained in the assembly, their diameters and radial heat generation factors, and the connections for heat transfer between the rods and channels in the assembly. More than one assembly may have the same rod configuration type. Conversely, some assemblies may contain no rods at all.

The rod configuration description input is read one assembly at a time on RODS.2 and RODS.3 for all NASSEM[CHAN.1] assemblies. RODS.2 and RODS.3 are read sequentially. RODS.2 defines the rod configuration type for a given assembly and, on the first encounter of the rod configuration type number, RODS.3 is read to define the rod input for that type. On subsequent encounters of that rod configuration type number for another assembly, RODS.3 is not read, as the previous input describing that rod configuration type is automatically copied into the rod geometry arrays for the assembly. For an assembly that does not contain rods, RODS.2 is read with ITYPA = 0 and NORODS = 0, and RODS.3 is not read.

RODS.2 NOA,ITYPA,NORODS,INTAPE

FORMAT(4I5)

| Columns | Variable | Description |
|---|---|---|
| 1-5 | NOA | Assembly number. |
| 6-10 | ITYPA | Rod configuration type number for assembly NOA. |
| 11-15 | NORODS | Number of rods in configuration type ITYPA. |
| 16-20 | INTAPE | I/O unit number from which the rod input for rod configuration type ITYPA is to be read. (Default is the input file.) |

RODS.3 (N,I,DR(I),RADIAL(I),(LR(I,L),PHI(I,L),L=1,6),I=1,NORODS[RODS.2])

Read only if NORODS > 0 on RODS.2.

FORMAT(I2,I3,2E5.2,6(I5,E5.2))

| Columns | Variable | Description |
|---|---|---|
| 1-2 | N | Identification number of fuel material type for rod I (default is 1). |
| 3-5 | I | Rod identification number (1 to NORODS[RODS.2]). |
| 6-10 | DR(I) | Rod outside diameter (in.). |
| 11-15 | RADIAL(I) | Radial heat generation factor for rod I, normalized to the average rod heat generation. |
| 16-20, 26-30 etc. | LR(I,L) | Identification number of the Lth channel connected to rod I. (Up to 6 channels can be connected to rod I.) |
| 21-25, 31-35, etc. | PHI(I,L) | Fraction of the perimeter if rod I is connected to adjacent channel LR(I,L). (By setting PHI = N this factor can be used to model N rods in an assembly. Refer to Section 3.2.2.2 for more information on rod modeling options.) |

*** RODS.3 is read NORODS[RODS.2] times for each new rod configuration type ***

*** RODS.2 and (optionally) RODS.3 are read sequentially NASSEM[CHAN.1] times ***

### 2.5.2 Fuel Material Properties

Fuel material properties must be entered if a rod model is used (i.e., NC > 0 on RODS.1). The fuel material types are numbered sequentially in the order they are read in on RODS.4. These index numbers must correspond to the material properties identified for a given rod by the value entered for N on RODS.3.

RODS.4 (KFUEL(I),CFUEL(I),RFUEL(I),DFUEL(I),KCLAD(I),CCLAD(I),RCLAD(I), TCLAD(I),HGAP(I),DROD(I),GEOMF(I),DFUELI(I),I=1,NFUELT[RODS.1])
Read only if NFUELT > 0 on RODS.1
FORMAT(10E5.2,I5,E5.2)

| Columns | Variable | Description |
|---|---|---|
| 1-5 | KFUEL(I) | Thermal conductivity of the fuel (Btu/h-ft°F). |
| 6-10 | CFUEL(I) | Specific heat of fuel (Btu/lb-°F). |
| 11-15 | RFUEL(I) | Fuel density (lb/ft$^3$). |
| 16-20 | DFUEL(I) | Fuel pellet diameter (in.). |
| 21-25 | KCLAD(I) | Thermal conductivity of cladding (Btu/h-ft-°F). |
| 26-30 | CCLAD(I) | Specific heat of cladding (Btu/lb-°F). |
| 31-35 | RCLAD(I) | Density of cladding (lb/ft$^3$). |
| 36-40 | TCLAD(I) | Cladding thickness (in.). |
| 41-45 | HGAP(I) | Fuel-clad gap conductance coefficient (Btu/h-ft$^2$-°F). |
| 46-50 | DROD(I) | Outside diameter of the fuel rod, including the cladding (in.). |

| Columns | Variable | Description |
|---|---|---|
| 51-55 | GEOMF(I) | Fuel rod geometry flag:<br>= 0; solid cylindrical fuel rod with internal heat generation.<br>= 1; annular cylindrical fuel rod with internal heat generation.<br>= 2; annular cylindrical fuel rod with a heat flux boundary condition on the inner fuel surface. |
| 56-60 | DFUELI(I) | Inner diameter of the fuel for an annular fuel rod (in.). (Used only if GEOMF(I) > 0). |

*** RODS.4 is read NFUELT[RODS.1] times ***

### 2.5.3 Temperature-Dependent Fuel Properties

This input is optional. Temperature-dependent fuel properties can be specified only for fuel material type 1. This option is selected by setting NQAX to 1 on RODS.1. If NQAX is zero, RODS.5 and RODS.6 are not read.

RODS.5 NTNODE Read only if NQAX = 1 on RODS.1
FORMAT(I5)

| Columns | Variable | Description |
|---|---|---|
| 1-5 | NTNODE | Number of entries in temperature-dependent fuel properties table for fuel material type 1. |

RODS.6 (TVARY(I),VARYK(I),VARYCP(I),VARYR(I),I=1,NTNODE[RODS.5])

Read only if NQAX = 1 on RODS.1

FORMAT(12E5.3)

| Columns | Variable | Description |
|---|---|---|
| 1-5, 21-25, 41-45 | TVARY(I) | Temperature (°F). |
| 6-10, 26-35, 46-50 | VARYK(I) | Thermal conductivity (Btu/h-ft-°F) at temperature TVARY(I). |
| 11-15, 31-35, 51-55 | VARYCP(I) | Specific heat (Btu/lb-°F) at TVARY(I). |
| 16-20, 36-40, 56-60 | VARYR(I) | Density (lb/ft$^3$) at TVARY(I). |

### 2.5.4 Axial Fuel Variation

This input is optional, and is read only if NRODTP[RODS.1] > 0. (The fuel type for a given rod is specified by variable N on RODS.3.) RODS.7 and RODS.8 are used to describe axial variation in the fuel for rods that use fuel type 1.

RODS.7 NZONE Read only if NRODTP > 0 on RODS.1

FORMAT(I5)

| Columns | Variable | Description |
|---|---|---|
| 1-5 | NZONE | Number of axial zones in a table of fuel material versus axial distance for fuel type 1. |

RODS.8 (ZEND(1,K),IZTYP(1,K),K=1,NZONE[RODS.7])

Read only if NRODTP > 0 on RODS.1.

FORMAT(6(E5.2,I5))

| Columns | Variable | Description |
|---|---|---|
| 1-5, 11-15, etc. | ZEND(1,K) | Relative axial location (x/L) of the end of the Kth fuel zone. |
| 6-10, 16-20, etc. | IZTYP(1,K) | Index of material type in fuel zone ending at ZEND(1,K). |

## 2.6 GROUP SLAB - SOLID STRUCTURE GEOMETRY

This group defines the modeling of the solid structures that comprise a cask or other physical system being analyzed. Solid structure nodes can have thermal connections to other solid structure nodes, or to channels. Some nodes may have connections both to other nodes and to channels, depending on the geometry of the system. A detailed discussion of the solid structure modeling conventions in COBRA-SFS, with illustrative examples is presented in Section 3.2.3. The user is advised to consult this section before attempting to set up the solid node input for a problem.

Thermal connections are indexed by type number, where a type is defined by the heat transfer characteristics of the connection. Solid-to-solid connections of the same type have the same thermal resistance, where the thermal resistance of a connection is calculated as

$$R = \frac{F_G}{k} \tag{2.1}$$

where $F_G$ = geometry factor (see Section 3.2.3)

$k$ = thermal conductivity of the material in the node (Btu/s-ft-°F).

Thermal connection types for solid-to-solid heat transfer are specified on SLAB.2, and the solid-to-solid connections for each node are specified on SLAB.3.

Thermal connections to channels are defined similarly by type (on SLAB.4), but for these connections the geometry factor is

$$F_G = \frac{L}{W} \tag{2.2}$$

where $L$ = length from solid node center to the node edge facing the channel

$W$ = perimeter of the node seen by the channel.

All nodes that have channel connections must be identified by input on SLAB.5.

SLAB.1 AGROUP,NKSS,NKSF,NWK
FORMAT(A4,1X,13I5)

| Columns | Variable | Description |
|---|---|---|
| 1-4 | AGROUP | Enter SLAB |
| 6-10 | NKSS | Number of solid-to-solid thermal connection types. |
| 11-15 | NKSF | Number of solid-to-fluid thermal connection types. |
| 16-20 | NWK | Number of solid structure nodes. |

### 2.6.1 Solid-to-Solid Thermal Connection Types

A total of NKSS[SLAB.1] thermal connections types must be defined by the input on SLAB.2. The thermal resistance of a connection type, as defined by Equation (2.1), can be expressed in either of two different ways in the input on SLAB.2. The resistance can be specified directly with R from Equation (2.1) entered in variable RSER(IC) on SLAB.2, in units of s-ft-°F/Btu. Alternatively, the user can define the geometry factors ($F_G$) for the nodes by entering the width-to-length ratios for the two adjacent nodes in variables RDIMA(IC) and RDIMB(IC) on SLAB.2, where RDIMA is the geometry factor for the lower-numbered node of any pair of nodes connected by thermal connection type IC, and RDIMB is the geometry factor for the higher-numbered node of the pair. The code will calculate the resistance from the geometry and the conductivity of the node, identified by its material property type number (specified with the node input on SLAB.3).

The heat transfer between connected nodes is calculated assuming perfect contact. If there is significant contact resistance, it must be specified separately for the connection type by defining the gap resistance (RPAR(IC)) and the heat transfer area (ARAD(IC)) in the gap, and defining appropriate emissivities (EMA(IC) and EMB(IC)) for radiation heat transfer across the gap.

SLAB.2 (IC,RDIMA(IC),RDIMB(IC),RSER(IC),RPAR(IC),EMA(IC),EMB(IC),ARAD(IC), IC=1,NKSS[SLAB.1]) Read only if NKSS > 0 SLAB.1

FORMAT(I5,4E10.5,3F5.3)

| Columns | Variable | Description |
|---|---|---|
| 1-5 | IC | Solid-to-solid thermal connection type identification number. |
| 6-15 | RDIMA(IC) | Geometry factor for the lower-numbered node of any pair of nodes connected by thermal connection type IC. (Not used if RSER is specified for connection IC.) |
| 16-25 | RDIMB(IC) | Geometry factor for the higher-numbered node of any pair of nodes connected by thermal connection type IC. (Not used if RSER is specified for connection IC.) |
| 26-35 | RSER(IC) | Thermal resistance (s-ft-°F/Btu) between the centers of adjacent nodes connected by thermal connection type IC. (Not used if RDIMA and RDIMB are specified for connection IC.) |
| 36-45 | RPAR(IC) | Thermal resistance (s-ft-°F/Btu) of the gap between adjacent solid structure nodes connected by thermal connection type IC. (Enter zero if there is no gap between these nodes.) |
| 46-50 | EMA(IC) | Surface emissivity of node A of any pair of nodes connected by thermal connection type IC. (Enter zero if there is no gap.) |
| 51-55 | EMB(IC) | Surface emissivity of node B of any pair of nodes connected by thermal connection type IC. (Enter zero if there is no gap.) |
| 56-60 | ARAD(IC) | Heat transfer area for the gap between nodes adjacent nodes connected by thermal connection type IC. (Enter zero if there is no gap.) |

*** SLAB.2 is read in NKSS[SLAB.1] times ***

### 2.6.2 Solid Structure Node Description

This input describes each solid node in the problem, identifies the material it is made of, and specifies the interconnections for heat transfer with other nodes. Section 3.2.3.2 contains a detailed discussion of this input. By convention, a connection is identified only once by specifying it for the lower-numbered node of the pair. For example, if node 2 connects to node 7, the connection is identified on the input line for node 2. But it is not repeated on the input line for node 7. Only connections to higher-numbered nodes are named explicitly for a given node.

SLAB.3 (KW,MATTYP(KW),WALLXC(KW),QSLAB(KW),NAXK(KW),NSLAB,(KWAL(L,KW), ICON(L,KW),L=1,NSLAB)
Read only if NWK > 0 on SLAB.1.
FORMAT(2I5,2F5.3,2I5,5(I5,I5))

| Columns | Variable | Description |
|---|---|---|
| 1-5 | KW | Solid structure node identification number. |
| 6-10 | MATTYP(KW) | Solid node material type identification number. (This must correspond to a material type specified on PROP.3.) |
| 11-15 | WALLXC(KW) | Solid node cross-sectional area (in.$^2$) for axial conduction. (Enter zero if axial conduction will not be calculated for this problem.) |
| 16-20 | QSLAB(KW) | Solid node volumetric heat generation rate (Btu/h-ft$^3$). |
| 21-25 | NAXK(KW) | Identification number of the axial heat generation profile table [specified on OPER.16] to be applied to QSLAB(KW). (Default is 1.) |
| 26-30 | NSLAB | Number of thermal connections to adjacent solid nodes with index numbers greater than KW. |
| 31-35, 41-45, etc. | KWAL(L,KW) | Identification number of the Lth solid node adjacent to node KW, where KWAL(L,KW) > KW. |

| Columns | Variable | Description |
|---|---|---|
| 36-40, 46-50, etc. | ICON(L,KW) | Identification number of the thermal connection type for the connection between node KW and node KWAL(L,KW). (Note: This must correspond to a thermal connection type identified on SLAB.2. A maximum of 5 pairs of KWAL,ICON values may be specified on an input line. If NSLAB is greater than 5, continue this input on subsequent lines, starting in column 31, for as many lines as necessary to enter NSLAB connections.) |

*** SLAB.3 is read NWK[SLAB.1] times ***

### 2.6.3 Solid-to-Fluid Thermal Connection Types

This input is required only if solid structure nodes have heat transfer connections to flow channels. If NKSF[SLAB.1] is zero, this input is not read.

SLAB.4 (IC,RWAL(IC),WID(IC),IC=1,NSKF[SLAB.1]) Read only if NKSF > on SLAB.1
FORMAT(I5,2E10.5)

| Columns | Variable | Description |
|---|---|---|
| 1-5 | IC | Solid-to-fluid thermal connection type identification number. |
| 6-15 | RWAL(I) | Thermal resistance (s-ft-°F/Btu) from the solid structure node to the node surface that faces the channel. |
| 16-25 | WID(I) | Perimeter of solid node that faces the channel (inches). |

*** SLAB.4 is read in NKSF[SLAB.1] times ***

### 2.6.4 Solid-to-Fluid Connection Description

This input specifies the connections between solid nodes and fluid channels. If there are no connections between solid nodes and the fluid, this input line is not read. Only nodes with channel connections are identified in this input.

SLAB.5 (KW,NCHN,(IASSM(L,KW),IKW(L,KW),ICF(L,N),L=1,NCHN))
Read only if NSKF > 0 on SLAB.1
FORMAT(2I5,4(I5,I5,I5))

| Columns | Variable | Description |
|---|---|---|
| 1-5 | KW: | Identification number of solid node structure with thermal connection(s) to channel(s). (Note: Enter zero to terminate this input when all solid-to-fluid connections have been identified.) |
| 6-10 | NCHN | Number of thermal connections to adjacent channels for node KW. |
| 11-15, 26-30, etc. | IASSM(L,N) | Index number of assembly containing the Lth channel with thermal connections to node KW. |
| 16-20, 31-35 etc. | IKW(L,N) | Identification number of Lth channel with thermal connection to node KW. |
| 21-25, 36-40 etc. | ICF(L,N) | Identification number of solid structure node-to-fluid thermal connection type for the connection between channel IKW(L,KW) and node KW. (Note: This must correspond to a connection type specified on SLAB.4. A maximum of 4 sets of values of IASSM, IKW, and ICF may be specified on an input line. If NCHN is greater than 4, continue this input on subsequent lines, starting in column 11, for as many lines as necessary to enter NCHN connections.) |

*** SLAB.4 is read as many times as necessary to define the connections between solid structure nodes and flow channels. This input is terminated by entering a blank line after all nodes with connections to flow channels have been identified ***

## 2.7 GROUP RADG - THERMAL RADIATION EXCHANGE FACTORS

This group describes the radiation exchange factors for radiation heat transfer within the assemblies. The radiation exchange factor groups are specified by type, where a type is defined by the geometry and emissivities of the surfaces in the assembly. A radiation exchange factor group type consists of an array of graybody viewfactors for every surface in the assembly as it exchanges radiation with every other surface, plus the emissivities of the surfaces.

There are two ways the user can define a radiation exchange factor group type. The graybody viewfactors and emissivities can be read via I/O unit 10 from a file generated by the auxiliary program RADX-1 (see Section 6), or the user can supply blackbody viewfactors for the enclosure, and the code will calculate the appropriate graybody exchange factors for that type. Both options can be used in the same problem for different assemblies. When viewfactors generated by RADX-1 are used, the walls of the assembly must be modeled with eight solid structure nodes, two on each face of the assembly enclosure. For assemblies where blackbody viewfactors are specified, the walls can be modeled with any number of nodes.

Only one radiation group type can be specified within a given assembly, but a given solid structure node may belong to more than one group, if it has surfaces facing more than one assembly. Refer to Section 3.2.4 for a detailed discussion of the radiation modeling conventions in COBRA-SFS.

RADG.1 AGROUP,NASSR,NT10,NRADG
FORMAT(A4,1X,3I5)

| Columns | Variable | Description |
|---|---|---|
| 1-4 | AGROUP | Enter RADG |
| 6-10 | NASSR | Number of assemblies for which radiation groups are to be specified. |

| Columns | Variable | Description |
|---|---|---|
| 11-15 | NT10 | Number of radiation groups to be read from I/O unit 10. (Maximum of 6. These radiation exchange factors groups are calculated using program RADX-1.) |
| 16-20 | NRADG | Number of radiation exchange factor group types to be calculated directly from input of blackbody viewfactors and emissivities. |

### 2.7.1 Blackbody Radiation Exchange Factor Types

This input is optional and is read only if NRADG on RADG.1 is greater than zero. It is used to define radiation viewfactors for enclosures that cannot be defined using program RADX-1. (RADX-1 calculates radiation exchange factors only for assemblies containing fuel rods.) Refer to Section 3.2.4.1 for examples illustrating how to specify blackbody exchange factors for assemblies without rods.

RADG.2 NRAD,NSURF Read only if NRADG > 0 on RADG.1
FORMAT(2I5)

| Columns | Variable | Description |
|---|---|---|
| 1-5 | NRAD | Radiation exchange factor group type identification number. |
| 6-10 | NSURF | Number of surfaces in radiation exchange factor group type NRAD. |

### 2.7.2 Blackbody Radiation Exchange Factors

For each radiation exchange factor group type NRAD, the user must enter data describing the geometry of the enclosure, and the blackbody viewfactors for all surfaces. These factors are area-weighted and can be calculated using the Hottel crossed-string correlation method, such that

$$A_n F_{nm} = A_m F_{mn} \tag{2.3}$$

where $A_n, A_m$ = area of surfaces n and m, respectively

$F_{nm}$ = graybody viewfactor from surface n to m

$F_{mn}$ = graybody viewfactor from surface m to n

<u>RADG.3</u> IS,AREAS(NRAD,IS),EMX(IS),(ISX,FVW(NRAD,IS,ISX),ISX=1,NSURF[RADG.2])

Read only if NRADG > 0 on RADG.1.

FORMAT(I5,2F5.3,6(I5,F5.3))

| Columns | Variable | Description |
|---|---|---|
| 1-5 | IS | Radiation surface identification number. (Note: Surfaces in an enclosure are numbered from 1 to NSURF for this input.) |
| 6-10 | AREAS(NRAD,IS) | Perimeter of the surface IS (in.). |
| 11-15 | EMX(IS) | Emissivity of surface IS. |
| 16-20, 26-30, etc. | ISX | Index number of a surface that can exchange radiation with IS. |
| 21-25, 31-35, | FVW(NRAD,IS,ISX) | Blackbody viewfactor from surface IS to surface ISX. (Note: Because viewfactors are reciprocal by $A_nF_{nm} = A_mF_{mn}$, it is necessary only to enter the factors looking from n to m. The reciprocal factor, m to n, if entered as zero, will be calculated automatically in the code from $F_{nm}$ and the area ratio. Up to 6 pairs of values for ISX,FVW may be entered in an input line. If NSURF is greater than 6, this input record is repeated, starting at column 16, as many times as necessary to define blackbody viewfactors for NSURF surfaces.) |

*** RADG.3 is read NSURF[RADG.2] times ***

*** RADG.2 and RADG.3 are read sequentially, NRADG[RADG.1] times ***

```
* * * * * * * * * * * * * * * * * * * * * * * * * * * * * * * * * * * * * *
* Input lines RADG.4 through RADG.8 are read from I/O unit 10, which can be *
* generated using the auxiliary program RADX-1.  The input lines are listed *
* here for information only.  They are not supplied in the normal input    *
* stream.                                                                   *
* * * * * * * * * * * * * * * * * * * * * * * * * * * * * * * * * * * * * *
```

**RADG.4** ALABEL,PDR,EMW,EMR

Read from I/O unit 10 only if NT10 > 0 on RADG.1.

FORMAT(A10,2E5.0)

| Columns | Variable | Description |
|---|---|---|
| 1-10 | ALABEL | Label used to identify the input file (user convenience). |
| 11-15 | EMW | Default emissivity of the solid structure nodes modeling the wall of the assembly. |
| 16-20 | EMR | Emissivity of the rods. |

**RADG.5** MM1,MM2,MM3

Read from I/O unit 10 only if NT10 > 0 on RADG.1.

FORMAT(3I5)

| Columns | Variable | Description |
|---|---|---|
| 1-5 | MM1 | Total number of surfaces for radiation exchange in radiation group MM2. |
| 6-10 | MM2 | Identification number for this radiation group. |
| 11-15 | MM3 | Flag for number of surfaces on a rod, (must correspond to value for NTHETA entered on RODS.1). |

**RADG.6** (EMV(I),I=1,8)

Read from I/O unit 10 only if NT10 > 0 on RADG.1.

FORMAT(8F15.7)

| Columns | Variable | Description |
|---|---|---|
| 1-15, 16-30, 31-45, etc. | EMV(I) | Emissivity of the Ith solid structure node enclosing the assembly. (Note: This input is optional; if wall emissivities are uniform, this input is entered as a blank line. Default is EMW[RADG.4] for all wall nodes.). |

**RADG.7** (RRATIO(MM2,I),I=1,8)

Read from I/O unit 10 only if NT10 > 0 on RADG.1.

FORMAT(8E15.5)

| Columns | Variable | Description |
|---|---|---|
| 1-15, 16-30, 31-45, etc. | RRATIO(MM2,I) | Ratio of the perimeter of the Ith node of the assembly wall to the rod diameter, for radiation group MM2. |

**RADG.8** ((FVn(N,M),M=1,MM1),N=1,MM1),(n=MM2[RADG.7])

Read from I/O unit 10 only if NT10 > 0 on RADG.1.

FORMAT(8E15.5)

| Columns | Variable | Description |
|---|---|---|
| 1-15, 16-30, 31-45, etc. | FVn(N,M) | Graybody exchange factor from surface N to surface M for radiation group MM2. |

*** RADG.4 through RADG.8 are read sequentially NT10 times from I/O unit 10 ***

### 2.7.3 Assembly Radiation Group Information

This input line assigns the appropriate radiation exchange factor group type to each assembly that has radiation heat transfer.

RADG.9 IASS,ITYPR(IASS),MSID(IASS),(KSIDE(IASS,L),L=1,MSID)
FORMAT(3I5,12(I5))

| Columns | Variable | Description |
|---|---|---|
| 1-5 | IASS | Identification number of an assembly with radiation heat transfer. |
| 6-10 | ITYPR(IASS) | Radiation exchange factor group type. A positive identification number indicates a radiation group read from I/O unit 10. A negative identification number indicates a radiation group calculated from information provided in RADG.2 and RADG.3. |
| 11-15 | MSID(IASS) | Number of solid structure nodes with surfaces that are included in radiation exchange factor group ITYPR(IASS). |
| 16-20, 21-25, etc. | KSIDE(IASS,L) | Identification number of the solid structure node corresponding to the Lth surface of radiation exchange factor group ITYPR. Refer to Section 3.2.4.2 for examples illustrating the numbering convention for radiation exchange surfaces. (Up to 12 values may be entered on a line. If MSID > 12, continue on subsequent lines, beginning at column 16, for as many lines as necessary to enter node numbers for MSID surfaces.) |

*** RADG.9 is read NASSR[RADG.1] times ***

## 2.8 GROUP HEAT - HEAT TRANSFER CORRELATIONS

This group defines the heat transfer coefficient correlations for convection and conduction heat exchange between the fuel rods and the coolant. The correlations are identified by type number, which must correspond to the appropriate values specified for NFLMC(NASS) on CHAN.3. The option for the single-phase turbulent mixing model in COBRA-SFS can also be selected by input in this group.

**HEAT.1** AGROUP,NHEAT,NSCBC,NFCON
FORMAT(A4,1X,3I5)

| Columns | Variable | Description |
|---|---|---|
| 1-4 | AGROUP | Enter HEAT |
| 6-10 | NHEAT | Number of heat transfer correlation sets to be read in on HEAT.2. |
| 11-15 | NSCBC | Flag for single-phase turbulent mixing model: |

= 0; no turbulent mixing (default)

= 1; $W_T' = AMIX * (S_K\bar{G})$

= 2; $W_T' = AMIX * Re ** BMIX * (S_K\bar{G})$

= 3; $W_T' = AMIX * Re ** BMIX * (\overline{DG})$

= 4; $W_T' = AMIX * Re ** BMIX * (S_K/\ell_K)\ (\overline{DG})$

where $W_T'$ = turbulent crossflow

Re = Reynold's number (based on axial velocity).

$\bar{G}$ = average axial mass flux of the two channels connected by lateral flow connection K.

$S_K$ = lateral flow connection width.

| Columns | Variable | Description |
|---|---|---|
| | | $\bar{D}$ = average hydraulic diameter of the two channels connected by lateral flow connection K. |
| | | $\ell_k$ = transverse momentum control volume length for flow connection K. |
| | | AMIX,BMIX = user-defined constants on HEAT.3. |
| 16-20 | NFCON | Flag for radial conduction in the fluid: |
| | | = 0; no conduction in the fluid.<br>= 1; fluid conduction. |

### 2.8.1 Heat Transfer Coefficient Correlations

Each convection heat transfer correlation is read in with a turbulent and a laminar formulation,

$$H_T = (k/D)\ [AH1(I)Re^{AH2(I)}Pr^{AH3(I)} + AH4(I)] \tag{2.4}$$

$$H_L = (k/D)\ [AHL1(I)Re^{AHL2(I)}Pr^{AHL3(I)} + AHL4(I)] \tag{2.5}$$

The code evaluates the heat transfer coefficient as the maximum of the two; $H = \max(H_T, H_L)$. If a problem is known to have flow only in the turbulent regime, coefficients are needed only for $H_T$, and those for $H_L$ can be left blank. Conversely, for a problem with laminar flow only, the coefficients for $H_T$ can be left blank, with values entered for $H_L$ only.

**HEAT.2** (AH1(I),AH2(I),AH3(I),AH4(I),AHL1(I),AHL2(I),AHL3(I),AHL4(I),I=1,NHEAT)
FORMAT(8F5.3)

| Columns | Variable | Description |
|---|---|---|
| 1-5 | AH1(I) | Constants for the Ith turbulent single-phase heat transfer correlation of the form: |
| 6-10 | AH2(I) | |
| 11-15 | AH3(I) | |
| 16-20 | AH4(I) | $H_T = (K/D)\ [AH1(I)Re^{AH2(I)}Pr^{AH3(I)} + AH4(I)]$ |
| 21-25 | AHL1(I) | Constants for the Ith laminar single-phase heat transfer coefficient correlation of the form: |
| 26-30 | AHL2(I) | |
| 31-35 | AHL3(I) | |
| 36-40 | AHL4(I) | $H_L = (K/D)\ [(AH1(I)Re^{AHL2(I)}Pr^{AHL3(I)} + AHL4(I)]$ |

*** HEAT.2 is read NHEAT[HEAT.1] times ***

### 2.8.2 Turbulent Mixing

This input is required to define parameters for the turbulent mixing model. The coefficients for the turbulent crossflow mixing correlation must be specified in accordance with the flag NSCBC set on HEAT.1. This input is read on HEAT.3 for each assembly type. The variable MAXTYP is the number of different assembly types, ITYPA, read on CHAN.4.

Turbulent mixing is included in the energy and momentum equations as an equal mass exchange process through the lateral flow connections. It is assumed that the turbulent exchange mixes both enthalpy and momentum. The factor FTM is a correction factor between 0.0 and 1.0 applied to the momentum mixing term to account for the imperfect analogy between turbulent transport of thermal energy and momentum.

HEAT.3 (AMIX(N),BMIX(N),N=1,MAXTYP)

Read only if NSCBC > 0 on HEAT.1

FORMAT(2E5.0)

| Columns | Variable | Description |
|---|---|---|
| 1-5 | AMIX(N) | Leading coefficient for turbulent mixing correlation in assembly type N. |
| 6-10 | BMIX(N) | Reynolds number coefficient for turbulent mixing correlation in assembly type N. (Not used if NSCBC = 1.) |

*** HEAT.3 is read once for each assembly type, for a total of MAXTYP times if NSCBC > 0 on HEAT.1 ***

HEAT.4 FTM

Read only if NSCBC > 0 on HEAT.1

FORMAT(F5.0)

| Columns | Variable | Description |
|---|---|---|
| 1-5 | FTM | Turbulent momentum factor; determines relative strength with which turbulent exchange mixes momentum, as compared to enthalpy. $0.0 \leq FTM \leq 1.0$; default is 0.0. |

### 2.8.3 Fluid Conduction

If NFCON = 1, radial heat conduction in the fluid will be calculated for the problem. Heat conduction is solved for between adjacent channels along the conduction path defined by the length of the lateral control volume, (DIST on CHAN.7). The input on HEAT.5 can be used to modify the conduction length for the lateral connection in a given assembly, to account for variations in the connection lengths not considered in the values entered for DIST.

**HEAT.5** (GK(N),N=1,MAXTYP) Read only if NFCON = 1 on HEAT.1.
FORMAT(16E5.0)

| Columns | Variable | Description |
|---|---|---|
| 1-5, 6-10, 11-15, etc. | GK(N) | Length factor for conduction in the coolant through lateral flow connections between channels in assemblies of type N. Enter 1.0 to use the length specified in DIST on CHAN.7. Enter 0.0 to eliminate fluid conduction in assemblies of type N. (Up to 16 values can be read on a line. If there are more than 16 assembly types, repeat this line as many times as necessary to identify MAXTYP assembly types.) |

## 2.9 GROUP DRAG - FRICTION FACTORS AND LOSS COEFFICIENTS

This group describes the axial pressure losses due to wall friction and local obstructions in the flow field. The optional network model can be specified by setting the flag NETWK on DRAG.1. (Refer to Section 3.3.2 for a detailed discussion of the network model.)

**DRAG.1** AGROUP,NFRICT,NOLC,NRAMP,NLCFF,NLCFP,NETWK,NOGRP,NBLOCK,NVISCW
FORMAT(A4,1X,9I5)

| Columns | Variable | Description |
|---|---|---|
| 1-4 | AGROUP | Enter DRAG |
| 6-10 | NFRICT | Number of friction factor correlation sets to be read in. (Default is 1.) |
| 11-15 | NOLC | Number of assembly types for which loss coefficients are to be input. |
| 16-20 | NRAMP | Number of iterations over which the loss terms are to be ramped into the solution. (Default is 1.) |
| 21-25 | NLCFF | Number of loss coefficient versus Reynolds number forcing functions. |
| 26-30 | NLCFP | Number of points in the loss coefficient forcing function versus Re profiles. |
| 31-35 | NETWK | Flag for optional pressure drop network model:<br>= 0; not used.<br>= 1; pressure drop will be calculated for user-specified assembly network. |
| 36-40 | NOGRP | Number of assembly groups for the network model. Used only if NETWK > 0. |
| 41-45 | NBLOCK | Number of axial locations where axial flow blockages occur. |

| Columns | Variable | Description |
|---|---|---|
| 46-50 | NVISCW | Flag for hot wall correction to viscosity in friction factor correlation:<br>= 0; no hot wall correction.<br>= 1; apply hot wall correction to channels with heated surfaces. |

### 2.9.1 Friction Factor Correlations

Wall friction losses are described using friction factors such that the axial fractional pressure gradient is given by

$$\frac{dP}{dz} = \frac{f|m|m}{2g_c D_h \rho A} \tag{2.6}$$

where f = friction factor
m = mass flow rate (lbm/s)
$\rho$ = density (lbm/ft$^3$)
$D_h$ = hydraulic diameter (ft)
A = channel area (ft$^2$)
$g_c$ = 32.2 (lbm-ft)/(lbf-s$^2$).

The friction factor, f, is determined from the Blaisus relation

$$f = aRe^b + c \tag{2.7}$$

Any number of correlations can be specified by input, to be used in the various flow channels. Each correlation consists of a turbulent and a laminar formulation,

$$f_T = AA(I)Re^{BB(I)} + CC(I)Re^{DD(I)} + EE(I) \tag{2.8}$$

$$f_L = AAL(I)Re^{BBL(I)} + CCL(I) \tag{2.9}$$

The code evaluates the friction factor as the maximum of the turbulent and laminar formulations;

$$f = \max\ (f_T,\ f_L) \tag{2.10}$$

For problems with turbulent flow only, the $f_L$ can be specified as zero. Similarly, for problems with laminar flow only, $f_T$ can be specified as zero. But the user should be aware that some laminar friction factor correlations can produce unreasonably low friction factors at high Reynolds numbers. The input for the turbulent correlation can be used to define a lower limit on f to avoid computational problems at high flow rates.

<u>DRAG.2</u> AA(I),BB(I),CC(I),DD(I),EE(I),AAL(I),BBL(I),CCL(I),I=1,NFRICT)
FORMAT(8F5.3)

| Columns | Variable | Description |
|---|---|---|
| 1-5 | AA(I) | Constants in the turbulent friction factor correlation of the form: |
| 6-10 | BB(I) | |
| 11-15 | CC(I) | |
| 16-20 | DD(I) | $f_T = AA(I)Re^{BB(I)} + CC(I)Re^{DD(I)} + EE(I)$ |
| 21-25 | EE(I) | |
| 26-30 | AAL(I) | Constants for laminar friction factor correlation |
| 31-35 | BBL(I) | |
| 36-40 | CCL(I) | of the form: $f_L = AAL(I)Re^{BBL(I)} + CCL(I)$ |

*** DRAG.2 is read in NFRICT[DRAG.1] times ***

### 2.9.2 Local Loss Coefficients

Hydraulic losses associated with grid spacers or other structure that causes irrecoverable axial pressure losses in a channel are modeled using pressure loss coefficients. The pressure loss is calculated as

$$\Delta P = C_D \frac{|m|m}{2\rho g_c A^2} \tag{2.11}$$

where $C_D$ = loss coefficient

m = upstream mass flow rate (lbm/s).

Axial loss coefficients can be specified for any channel or group of channels, at any axial location in the problem.

Local loss coefficients are specified by assembly type. In each assembly type having local losses, the user defines the axial levels and channels where the losses occur, and specifies the loss coefficient to be applied. This input is specified on DRAG.3 and DRAG.4. These two input records are read in sequence NOLC[DRAG.1] times.

DRAG.3 NB,NLCOEF(NB),LCFF(NB) Read only if NOLC > 0 on DRAG.1.
FORMAT(3I5)

| Columns | Variable | Description |
|---|---|---|
| 1-5 | NB | Identification number of an assembly type with loss coefficients. |
| 6-10 | NLCOEF(NB) | Number of sets of channels in assembly type NB that have loss coefficients. (Note: A channel set is defined as a group of sequentially numbered channels that all have the same loss coefficients at the same axial locations.) |
| 11-15 | LCFF(NB) | Identification number of loss coefficient forcing function to be applied to loss coefficients in assembly type NB. (Must correspond to a forcing function entered on DRAG.6.) |

DRAG.4 NLEV,ILCS(NB,L),ILCE(NB,L),(FACTOR(NB,J),CD(NB,J),J=1,NLEV)
Read only if NOLC > 0 on DRAG.1.
FORMAT(3I5,5(F5.3,F5.3))

| Columns | Variable | Description |
|---|---|---|
| 1-5 | NLEV | Number of axial locations in the Lth location set for assembly type NB. |
| 6-10 | ILCS(NB,L) | Identification number of starting channel in the Lth location set of assembly type NB. |

| Columns | Variable | Description |
|---|---|---|
| 11-15 | ILCE(NB,L) | Identification number of ending channel in the Lth location set of assembly type NB. |
| 16-20, 26-30, etc. | FACTOR(NB,J) | Relative height (X/L) of the Jth axial location for the Lth channel set in assembly type NB. |
| 21-25, 31-35, etc. | CD(NB,J) | Loss coefficient to be applied in channels ILCS(NB,L) through ILCE(NB,L) at axial location FACTOR(NB,J). (Up to 5 pairs of FACTOR, CD can be entered on a line. If NLEV > 5, repeat this line starting in column 16, as many times as necessary to define NLEV locations of losses.) |

*** DRAG.3 and DRAG.4 are read in sequence NOLC[DRAG.1] times, with DRAG.4 read NLCOEF(NB) times for each time DRAG.3 is read ***

### 2.9.3 Loss Coefficient Forcing Functions

This input is read only if NLCFF > 0 on DRAG.1. Loss coefficients are specified as constants (in CD(NB,L) on DRAG.4), but the user has the option of varying loss coefficients as a function of Reynolds number. The forcing functions are numbered sequentially in the order they are defined on DRAG.6.

The forcing functions are specified for a Reynolds number table, which applies to all of the forcing functions. The forcing functions are specified as multiplicative factors normalized to the value of CD(NB,L) entered on DRAG.4.

DRAG.5 (RECL(I),I=1,NLCFP[DRAG.1]) Read only if NCLFF > 0 on DRAG.1
FORMAT(12E5.0)

| Columns | Variable | Description |
|---|---|---|
| 1-5, 6-10, etc. | RECL(I) | Reynolds number for the Ith point in the loss coefficient forcing function profiles. |

DRAG.6 ((FFLC(L,I),I=1,NLCFP[DRAG.1]),L=1,NLCFF[DRAG.1]

Read only if NCLFF > 0 on DRAG.1.

FORMAT(12E5.0)

| Columns | Variable | Description |
|---|---|---|
| 1-5, 6-10, etc. | FFLC(L,I) | The loss coefficient factor for Reynolds number RECL(I) in the Lth forcing function profile. (L is numbered automatically from 1 to NLCFF.) |

*** DRAG.6 is read NLCFF[DRAG.1] times ***

### 2.9.4 Losses for Network Model

This input is required only if the network model has been specified by NETWK=1 on DRAG.1. The assembly grouping for the network is defined by reading DRAG.7 for each assembly. Each assembly is assigned a group number, inlet loss parameters, and optional loss coefficient forcing functions. A loss coefficient for the total flow in all assemblies is specified on DRAG.8. Loss parameters for individual groups of assemblies are specified on DRAG.9 for NOGRP[DRAG.1] groups of assemblies.

DRAG.7 (NETGRP(N),NINFF(N),NOUTFF(N),RAIN(N),PWIN(N),HAIN(N),RAOUT(N), PWOUT(N),HOUT(N),N=1,NASSEM[CHAN.1])

Read only if NETWK = 1 on CHAN.1

FORMAT(3I5,6F10.0)

| Columns | Variable | Description |
|---|---|---|
| 1-5 | NETGRP(N) | Assembly grouping number to be used with assembly N, corresponding to the assembly groups described in DRAG.9. (Default is 1.) |
| 6-10 | NINFF(N) | Identification number of loss coefficient forcing function versus Reynolds number, (defined on DRAG.5 and DRAG.6), to be used with assembly inlet loss, RAIN(N). (Default is 0, for no forcing function.) |

| Columns | Variable | Description |
|---|---|---|
| 11-15 | NOUTFF(N) | Identification number of loss coefficient forcing function versus Reynolds number, to be used with assembly outlet loss RAOUT(N). (Default is 0, for no forcing function.) |
| 16-25 | RAIN(N) | Inlet loss parameter $(ft\text{-}lbm)^{-1}$ to be applied at inlet of assembly N. |
| 26-35 | PWIN(N) | Wetted perimeter (inches) associated with inlet loss RAIN. (Used only in Reynolds number calculation when NINFF(N) > 0; default is 1.0). |
| 36-45 | HAIN(N) | Gravitational head length (inches) associated with the assembly inlet loss. |
| 46-55 | RAOUT(N) | Outlet loss parameter $(ft\text{-}lbm)^{-1}$ to be applied at outlet of assembly N. |
| 56-55 | PWOUT(N) | Wetted perimeter (inches) associated with outlet loss RAOUT(N). (Used only in Reynolds number calculation when NOUTFF(N) > 0; default is 1.0). |
| 66-75 | HAOUT(N) | Gravitational head length (inches) associated with the assembly outlet loss. |

*** DRAG.7 is read NASSEM[CHAN.1] times ***

DRAG.8 RTIN Read only if NOGRP > 0 on DRAG.1
FORMAT(F10.5)

| Columns | Variable | Description |
|---|---|---|
| 1-10 | RTIN | Loss parameter $(ft\text{-}lbm)^{-1}$ to be applied to the total flow rate (sum of all assembly flow rates); (Reynolds-number independent). |

DRAG.9 (RGIN(L),HGIN(L),RGOUT(L),HGOUT(L),L=1,NOGRP)

Read only if NOGRP > 0 on DRAG.1

FORMAT(4F10.5)

| Columns | Variable | Description |
|---|---|---|
| 1-10 | RGIN(L) | Loss parameter $(ft\text{-}lbm)^{-1}$ to be applied at assembly grouping inlet; (Reynolds number independent). |
| 11-20 | HGIN(L) | Gravitational head length (in.) associated with the inlet pressure loss for group L. |
| 21-30 | RGOUT(L) | Loss parameter $(ft\text{-}lbm)^{-1}$ to be applied at assembly grouping outlet; (Reynolds number independent). |
| 31-40 | HGOUT(L) | Gravitational head length (in.) associated with the outlet pressure loss for group L. |

*** DRAG.9 is read in NOGRP[DRAG.1] times ***

### 2.9.5 Local Blockages

This input allows the user to specify flow blockages at some axial locations in some channels. This is optional and is read only if NBLOCK is greater than zero on DRAG.1.

DRAG.10 NBLOCKA,NBLOCKC

Read only if NBLOCK > 0 on DRAG.1.

FORMAT(2I5)

| Columns | Variable | Description |
|---|---|---|
| 1-5 | NBLOCKA | Axial level where the blockage is located. |
| 6-10 | NBLOCKC | Number of channels blocked at axial level NBLOCKA. |

**DRAG.11** (IBLOCKA(I),IBLOCKC(I),I=1,NBLOCKC[DRAG.9])

Read only if NBLOCK > 0 on DRAG.1

FORMAT(16I5)

| Columns | Variable | Description |
|---|---|---|
| 1-5, 11-15, etc. | IBLOCKA(I) | Identification number of assembly containing blocked channel IBLOCKL(I). |
| 6-10, 16-20, etc. | IBLOCKC(I) | Identification number of the Ith blocked channel. |

*** DRAG.10 and DRAG.11 are read in sequence NBLOCK times to define all blocked channels ***

## 2.10 GROUP BDRY - THERMAL BOUNDARY CONDITIONS

This group defines the thermal interface between the system being modeled and the environment. It is designed to give the user a great deal of flexibility in specifying the thermal boundary conditions for a problem. Thermal boundary conditions may be specified for the side, the upper plenum, or the lower plenum. Heat is transferred to the environment through a series of boundary regions, each of which can use a different boundary connection type to define the heat transfer. Any number of boundary connection types can be defined for a given problem using the input on BDRY.2. The temperature of the environment seen by the boundary node is defined using axial profiles of boundary temperatures, read in BDRY.3. As many as are needed to characterize a given problem can be read in. Refer to Section 3.4.1 for a more complete discussion of boundary condition specification in COBRA-SFS, with illustrative examples.

Boundary conditions are defined for the sides of the system as it is assumed that the heat transfer will be primarily radial in most applications of COBRA-SFS. The side boundary conditions are defined by input on BDRY.4 and BDRY.5. Unless otherwise specified, it is assumed that the top and bottom boundaries are adiabatic for structural heat transfer, and heat can be transported across the top and bottom boundary only by flow of the coolant. But there is an option in the code to model an upper plenum, or lower plenum, or both, with specified thermal boundary conditions. These boundary conditions can be defined by input on BDRY.6 through BDRY.8.

BDRY.1 AGROUP,NBTYP,NBTEMP,NWSID,NPR
FORMAT(A4,1X,4I5)

| Columns | Variable | Description |
|---|---|---|
| 1-4 | AGROUP | Enter BDRY |
| 6-10 | NBTYP | Number of thermal boundary connection types. |
| 11-15 | NBTEMP | Number of axial boundary temperature profiles. |

| Columns | Variable | Description |
|---|---|---|
| 16-20 | NWSID | Number of solid structure nodes connected to the side thermal boundary. |
| 21-25 | NPR | Plenum model flag:<br>= 0; no plenum heat transfer model.<br>= 1; heat loss from one plenum only, either the upper or the lower plenum.<br>= 2; heat loss from both the upper and lower plenums. |

### 2.10.1 Thermal Boundary Connection Types

The thermal boundary connection types are structured to be as general as possible. They are formulated assuming that the heat flux in the boundary region can be expressed as a function of the temperature difference between the boundary nodes. The general form is

$$q''_{boundary} = C_1[C_2(T_i - T_{i+1})]^{C_3}(T_i - T_{i+1}) + \sigma\left(\frac{1}{\epsilon_i} + \frac{1}{\epsilon_{i+1}} - 1\right)^{-1}(T_i^4 - T_{i+1}^4) \tag{2.12}$$

where $C_n$ = user-defined constants

$\sigma$ = Stefan-Boltzmann constant, 0.1714(E8) Btu/h-ft$^2$-°R$^4$

$\epsilon_i$, $\epsilon_{i+1}$ = surface emissivities of boundary node i and i+1, respectively

$T_i$, $T_{i+1}$ = temperatures of node i and i+1, respectively.

The adaption of this general equation to specific boundary connection types modeling conduction, natural convection, and radiative boundary conditions is discussed in Section 3.4.1.1. Illustrative examples and modeling recommendations are given for each heat transfer mode.

BDRY.2 (I,C1(I),C2(I),C3(I),EM1(I),EM2(I),I=1,NBTYP[BDRY.1])
FORMAT(I5,3F10.0,2F5.3)

| Columns | Variable | Description |
|---|---|---|
| 1-5 | I | Thermal boundary connection type identification number. |
| 6-15 | C1(I) | Coefficients for user-defined heat flux at the |
| 16-25 | C2(I) | boundary. (Note: C1 has units of Btu/s-in.$^2$-°F |
| 26-35 | C3(I) | and C2 has units of °F$^{-1}$. C3 is dimensionless.) The defaults of C2 and C3 are zero. |
| 36-40 | EM1(I) | Surface emissivity for boundary node i of a pair connected by thermal boundary connection type N (leave blank if there is no radiation). |
| 41-45 | EM2(I) | Surface emissivity for boundary node i+1 of a pair connected by thermal boundary connection type N (default is 1.0 if EM1 > 0). |

*** BDRY.2 is read in NBTYP[BDRY.1] times ***

### 2.10.2 Boundary Axial Temperature Profiles

This input defines the temperature of the environment the system sees. A boundary temperature can be specified as uniform by entering a two-point table, with the same temperature at relative axial locations 0.0 and 1.0. A total of NBTEMP[BDRY.1] boundary temperature profiles must be entered.

BDRY.3 (I,NZONET(I),(ZENDT(I,K),BT(I,K),K=1,NZONET(I)),I=1,NBTEMP[BDRY.1])
FORMAT(2I5,6(2F5.0))

| Columns | Variable | Description |
|---|---|---|
| 1-5 | I | Side boundary temperature profile identification number. |
| 6-10 | NZONET(I) | Number of entries in the table of boundary temperature versus axial position for profile I. (Note: A table requires a minimum of two points.) |

| Columns | Variable | Description |
|---|---|---|
| 11-15, 21-25, 31-35, etc. | ZENDT(I,K) | Relative axial location (x/L) of the Kth element of boundary temperature profile I. (ZENDT must begin with 0.0 and end with 1.0) |
| 16-20, 26-30, etc. | BT(I,K) | Boundary temperature at location ZENDT (I,K). (Note: Up to 6 pairs of values for ZENDT,BT can be entered on a line. If NZONET(I) > 6, repeat this line, starting in column 11, until NZONET(I) pairs of entries have been specified.) |

*** BDRY.3 is read NBTEMP[BDRY.1] times **

### 2.10.3 Side Thermal Boundary Connections

The heat transfer connections to the boundary are defined as occurring through a series of radial regions, each of which can use a different boundary connection type to define the heat transfer. In most cases, only one region will be required to define the heat transfer from the edge of the system to the environment, (e.g., from the outer surface of the cask to the ambient air temperature). In some cases, however, there may be additional material between the boundary slab node and the environment. The effect of this material can be included by using radial boundary regions, connected by appropriately-defined boundary connection types. This input can also be used to vary the boundary connection type axially. The total number of regions connecting a given boundary node to the environment is defined by the user, in variable NHSID(I) on BDRY.4. The first region connects to the boundary node, the rest of the regions are connected in series, each by its appropriate boundary type, up to the NHSID(I)th region, which connects to the environment.

**BDRY.4** (IWSID(I),NHSID(I),AWSID(I),NBTTYP(I),QBSRC(I),I=1,NBSID[BDRY.1])
FORMAT(2I5,E5.3,I5,E5.3)

| Columns | Variable | Description |
|---|---|---|
| 1-5 | IWSID(I) | Solid structure node connected to side thermal boundary temperature. |
| 6-10 | NHSID(I) | Number of radial boundary regions connecting IWSID(I) to the boundary temperature. |
| 11-15 | AWSID(I) | Perimeter of node IWSID(I) facing the boundary (in.). |
| 16-20 | NBTTYP(I) | Identification number of boundary temperature profile seen by node IWSID(I). (Must correspond to the index of a profile entered on BDRY.3). |
| 21-25 | QBSRC(I) | Optional boundary heat flux (Btu/h-ft$^2$); applied to the outermost radial region only. (This variable can be used to model a heat source outside the system, such as solar heating on the surface, an external fire, etc.) |

**BDRY.5** (J,SPER(I,J),NZONEB(I,J),(ZENDB(I,J,K),NBCTYP(I,J,K),K=1,NZONEB(I,J)),
J=1,NHSID(I))
FORMAT(I5,F5.2,I5,6(F5.2,I5))

| Columns | Variable | Description |
|---|---|---|
| 1-5 | J | Radial boundary region associated with node IWSID(I). (Note: Boundary regions must be numbered sequentially from 1 to NHSID(I).) |
| 6-10 | SPER(I,J) | Perimeter of Jth boundary region, for node IWSID(I), normalized to AWSID(I). |
| 11-15 | NZONEB(I,J) | Number of axial zones to be read for a table of boundary connection types versus axial position for region J. (Default is 1, for an axially uniform boundary connection.) |
| 16-20, 26-30, etc. | ZENDB(I,J,K) | Relative axial location (x/L) of the end of the Kth boundary heat transfer zone in region J. If the boundary is axially uniform, ZENDB(I,J,1) = 1.0.) |

| Columns | Variable | Description |
|---|---|---|
| 21-25, 31-35, etc. | NBCTYP(I,J,K) | Boundary thermal connection type for the Kth axial segment of region J. (This index must correspond to a boundary connection type defined on BDRY.2) (Note: Up to 6 pairs of ZENDB,NBCTYP can be read on a line. If NZONEB(I,J) > 6, repeat this line, starting with column 11, until NZONEB axial regions have been defined.) |

*** BDRY.5 is read NHSID(I)[BDRY.4] times ***

*** BDRY.4 and BDRY.5 are read sequentially NBSID[BDRY.1] times ***

### 2.10.4 Plenum Boundary Connections

This input group defines the heat transfer from the upper and lower plenums to ambient conditions. This input is optional, and is read only if NPR[BDRY.1] is greater than zero. The user may chose to model the lower plenum only, the upper plenum only, or both. When the plenum models are used, it is assumed in the flow solution that all channels in the system connect to the plenum, and the flow is instantaneously and perfectly mixed within the plenum. The input in this section is concerned only with the heat transfer connections between the solid structure nodes at the top and/or bottom of the system and the plenum nodes, and the connections from the plenum nodes to the environment.

For each plenum, nominal heat transfer areas are defined for the axial and radial direction. The heat transfer paths through the plenum are defined using a series of plenum boundary regions, which connect radially or axially from the plenum fluid to the boundary. These regions are connected by thermal boundary connection types in much the same manner as the regions defined for the side boundary connections. The ambient temperature of the environment beyond the upper or lower plenum is specified in TAMBP(1,N) for the radial regions, and in TAMBP(2,N) for the axial regions. Refer to Section 3.4.1.3 for a detailed discussion of the plenum model in COBRA-SFS.

**BDRY.6** IPLENR(N),AWPS(N),AWPAX(N),NPSID(N),NPAX(N),TAMBP(1,N),TAMBP(2,N), QPSRC(1,N),QPSRC(2,N)

Read only if NPR > 0 on BDRY.1

FORMAT(I5,2F5.3,2I5,4F5.3)

| Columns | Variable | Description |
|---|---|---|
| 1-5 | IPLENR(N) | Flag for plenum region under consideration:<br>= 1; lower plenum.<br>= 2; upper plenum. |
| 6-10 | AWPS(N) | Nominal plenum radial heat transfer area (in.$^2$). |
| 11-15 | AWPAX(N) | Nominal plenum axial heat transfer area (in.$^2$). |
| 16-20 | NPSID(N) | Number of radial plenum boundary regions. |
| 21-25 | NPAX(N) | Number of axial plenum boundary regions. |
| 26-30 | TAMBP(1,N) | Plenum radial boundary temperature, (F). |
| 31-35 | TAMBP(2,N) | Plenum axial boundary temperature, (F). |
| 36-40 | QPSRC(1,N) | Optional plenum radial boundary heat flux, (Btu/h-ft$^2$) (applied to the outermost plenum radial region only). |
| 41-45 | QPSRC(2,N) | Optional plenum axial boundary heat flux, (Btu/h-ft$^2$) (applied to the outermost plenum axial region only). |

**BDRY.7** I,SPERP(I,1,IPL(N)),NPTYP(I,1,IPL(N)),NPWN,(IPINTP(I,J), MATTYPP(I,J),AREAXCP(I,J),DXPLEN(J),J=1,NPWN),I=1,NPSID(N)[BDRY.6])

Read only if NPSID(N) > 0 on BDRY.6

FORMAT(I5,F5.3,2I5,3(2I5,2F5.3))

| Columns | Variable | Description |
|---|---|---|
| 1-5 | I | Plenum radial region number. (Note: Regions must be numbered sequentially from 1 to NPSID(N).) |
| 6-10 | SPERP(I,1,IPL(N)) | Plenum radial region heat transfer area multiplier, (normalized to AWPS(N) on BDRY.6). |

| Columns | Variable | Description |
|---|---|---|
| 11-15 | NPTYP(I,1,IPL(N)) | Thermal connection type for connections between solid structure nodes and plenum radial region I. (Note: This must correspond to a boundary connection type defined on BDRY.2.) |
| 16-20 | NPWN | Number of solid structure nodes connected to plenum radial region I. |
| 21-25, 41-45, 61-65 | IPINTP(I,J) | Identification number of the Jth solid node connected to plenum radial region I. |
| 26-30, 46-50, 66-70 | MATTYPP(I,J) | Identification number of the material type for the connection between node IPINTP(I,J) and plenum axial region I. |
| 31-35, 51-55, 71-75 | AREAXCP(I,J) | Heat transfer area for connection J from solid node IPINTP(I,J) to plenum region I. (Default is node IPINTP(I,J) cross sectional area for axial conduction; WALLXC, specified on SLAB.3.) |
| 36-40, 56-60 76-80 | DXPLEN(I,J) | Length (in.) for heat transfer from node IPINTP(I,J) to the center of plenum radial region I. (Note: Up to 3 sets of values for IPINTP, MATTYPP, AREAXCP, and DXPLEN may be read on a line. If NPWN is greater than 3, repeat this line starting at column 21 as many times as necessary to define NPWN sets of values. |

*** BDRY.7 is read NPSID(N)[BDRY.6] times ***

<u>BDRY.8</u> (I,SPERP(I,2,IPL(N)),NPTYP(I,2,IPL(N)),NPWN,(IPINTP(I,J),
MATTYPP(I,J),AREAXCP(I,J),DXPLEN(J),J=1,NPWN),I=1,NPAX(N)[BDRY.6])
Read only if NPAX(N) > 0 on BDRY.6
FORMAT(I5,F5.3,2I5,3(2I5,2F5.3))

| Columns | Variable | Description |
|---|---|---|
| 1-5 | I | Plenum axial region number. (Note: Regions must be numbered sequentially from 1 to NPAX(N).) |
| 6-10 | SPERP(I,2,IPL(N)) | Plenum axial region heat transfer area multiplier, normalized to AWPAX(N) on BDRY.6. |

| Columns | Variable | Description |
|---|---|---|
| 11-15 | NPTYP(I,2,IPL(N)) | Thermal connection type for connections between solid structure nodes and plenum axial region I. (Note: This must correspond to a boundary connection type defined on BDRY.2.) |
| 16-20 | NPWN | Number of solid nodes connected to plenum axial region I. |
| 21-25, 41-45, 61-65 | IPINTP(I,J) | Identification number of the Jth solid node connected to plenum axial region I. |
| 26-30, 46-50, 66-70 | MATTYPP(I,J) | Identification number of the solid material type for the connection between IPINTP(I,J) and plenum axial region I. |
| 31-35, 51-55, 71-75 | AREAXCP(I,J) | Heat transfer area (in.$^2$) for connection from solid node IPINTP(I,J) and plenum axial region I. (Default node is IPINTP(I,J) area for axial conduction, WALLXC, specified SLAB.4). |
| 36-40, 56-60, 76-80 | DXPLEN(I,J) | Length (in.) for heat transfer from node IPINTP(I,J) to the center of plenum axial region I. (Up to 3 sets of values for IPINTP, MATTYPP, AREAXCP, DXPLEN may be entered on a line. If NPWN is greater than 3, repeat this line, starting at column 21, as many times as necessary to define NPWN sets of values.) |

*** BDRY.8 is read NPAX[BDRY.6] times ***

*** BDRY.6, BDRY.7, and BDRY.8 are read in sequence NPR[BDRY.1] times ***

## 2.11 GROUP OPER - OPERATING CONDITIONS

This group defines the initial conditions for the system, inlet and outlet conditions, and defines any transient forcing functions in the problem. The heating rates for the various assemblies in the system are also specified in this group, along with the axial heat generation profiles.

OPER.1 AGROUP,IHH,IG,ITDP,NRPF,NP,NH,NG,NGPRFL,NHX,NQ,NQPRFL,NDPA,NRAMPH,NAXP
FORMAT(A4,1X,14I5)

| Columns | Variable | Description |
|---|---|---|
| 1-4 | AGROUP | Enter OPER |
| 6-10 | IHH | Option on inlet enthalpy or temperature on inlet flow, (HIN on OPER.2):<br>= 0; average inlet enthalpy (Btu/lbm).<br>= 1; average inlet temperature (F).<br>= 2; enthalpy for each channel inlet (Btu/lbm).<br>= 3; temperature for each channel inlet (F). |
| 11-15 | IG | Option on inlet flow distribution:<br>= 0; average inlet mass flux (Mlbm/h-ft$^2$).<br>= 1; average inlet mass flux (Mlbm/h-ft$^2$), but channel inlet flows will be split to give equal dP/dx across the first node.<br>= 2; average inlet mass flux (Mlbm/h-ft$^2$), but assembly inlet flows will be determined by user-supplied flow fractions (from OPER.4) (Channel mass flux will be uniform within an assembly).<br>= 3; average inlet mass flux (Mlbm/h-ft$^2$), but channel flows in each assembly will be determined by user-supplied flow fractions (on OPER.6).<br>= 4; average inlet mass flux (Mlbm/h-ft$^2$), but flows will be determined by both assembly flow fractions (from OPER.4) and channel flow fractions on (OPER.6). |

| Columns | Variable | Description |
|---|---|---|
| 16-20 | ITDP | Flag for flow or pressure drop boundary condition:<br>= 0; specified flow boundary condition.<br>= 1; uniform pressure drop (specified in DPS on OPER.2).<br>= 2; pressure drop resulting in uniform inlet mass flux.<br>= 3; uniform pressure drop calculated for total mass flow rate (FTOTAL on OPER.2). |
| 21-25 | NRPF | Flag for assembly heating rate specification:<br>= 0; all assemblies have same average heat generation (in PDN on OPER.2).<br>= 1; average heating rate is specified in PDN on OPER.2, and relative heat generation factors normalized to PDN, are specified for each assembly on OPER.7.<br>= 2; heating rate is read for each assembly, on OPER.7. (PDN on OPER.2 is not used.) |
| 26-30 | NP | Flag for transient forcing function for system pressure. NP pairs of values for a table of system pressure factors versus time are read on OPER.9. |
| 31-35 | NH | Flag for transient forcing function for inlet enthalpy or temperature. NH pairs of values for a table of inlet enthalpy or temperature factors versus time are read on OPER.10. |
| 36-40 | NG | Flag for transient forcing function for inlet mass flux (if ITDP = 0 or 3) or pressure drop (if ITDP = 1 or 2). A table of NG time values is read on OPER.11, for tables of inlet flow (or pressure drop) factors read on OPER.11. |
| 41-45 | NGPRFL | Number of transient forcing functions for inlet mass flux or pressure drop profiles to be read on OPER.12. (Used only if NG > 0.) |

| Columns | Variable | Description |
|---|---|---|
| 46-50 | NHX | Flag for transient forcing function for exit enthalpy or temperature. NHX pairs of values for a table of exit enthalpy or temperature factor versus time are read on OPER.13. |
| 51-55 | NQ | Flag for transient forcing function for average heating rate. A table of NQ time values is read on OPER.14, for tables of heating rate factors read on OPER.15. |
| 56-60 | NQPRFL | Number of heating rate transient forcing function profiles to be read in on OPER.15. (Used only if NQ > 0.) |
| 61-65 | NDPA | Option to specify a different pressure drop boundary conditions for each assembly when using the network model, used only if NETWK = 0 on DRAG.1, and ITDP = 1 or 2):<br>= 1; assembly pressure drops specified on OPER.8.<br>= 0; uniform pressure drop or flow boundary condition. |
| 65-70 | NRAMPH | Number of iterations over which the heat generation is to be ramped in. (Default is 1.) |
| 71-75 | NAXP | Flag for axial heat generation profiles:<br>= 0; uniform axial heat generation distribution for all rods (default).<br>> 0; number of axial heat generation profile tables to be entered on OPER.16 and OPER.17. |

### 2.11.1 Operating Conditions

This input defines the steady-state system pressure, inlet flow conditions, average heat generation rate and nominal pressure drop boundary conditions on the system. The operating conditions are described in more detail in Section 3.4.2.1.

OPER.2 PEXIT,HIN,GIN,PDN,HOUT,DPS,FTOTAL
FORMAT(7F10.0)

| Columns | Variable | Description |
|---|---|---|
| 1-10 | PEXIT | System pressure (psia). Used to calculate the boiling temperature limit based on the PLIQ[PROP.2] array. (Do not specify when coolant is gas.) |
| 11-20 | HIN | Average inlet enthalpy (Btu/lbm) or temperature (°F), depending on value specified for IHH on OPER.1. |
| 21-30 | GIN | Average inlet mass flux (Mlbm/h-ft$^2$). |
| 31-40 | PDN | Nominal heating rate (MBtu/h-ft$^3$). (Note: This value is based on fuel diameter when fuel model is used and rod diameter when fuel model is not used; see NC flag on RODS.1.) |
| 41-50 | HOUT | Optional exit enthalpy (Btu/lbm) or temperature (F), depending on value specified for IHH on OPER.1. |
| 51-60 | DPS | Total system pressure drop (psia). (Used only when ITDP = 1 or 2 on OPER.1) |
| 61-70 | FTOTAL | Total inlet flow rate (lbm/s). (Used only when ITDP = 3 on OPER.1). |

### 2.11.2 Nonuniform Operating Parameter Distributions

This input is optional. It is used to specify nonuniform inlet conditions for channel flow and enthalpy (or temperature), nonuniform assembly pressure drops, and to define a nonuniform heat generation distribution among the assemblies. This input is read only when the flags IHH, IG, NRPF, or NDPA are set to appropriate values on OPER.1.

### 2.11.2.1 Inlet Enthalpy (or Temperature) Distribution

**OPER.3** (HINLET(I),I=1,NCHANL) Read only if IHH > 1 on OPER.1
FORMAT(12E5.0)

| Columns | Variable | Description |
|---|---|---|
| 1-5, 6-10, 11-15, etc. | HINLET(I) | Inlet enthalpy (if IHH = 2) or inlet temperature (if IHH = 3) for channel I. |

### 2.11.2.2 Inlet Flow Distribution by Assembly and/or Channel

**OPER.4** (GINLET(I),I=1,NASSEM[CHAN.1]) Read only if IG = 2 or IG = 4 on OPER.1
FORMAT(12E5.0)

| Columns | Variable | Description |
|---|---|---|
| 1-5, 6-10, 11-15, etc. | GINLET(I) | Inlet mass flux (normalized to GIN on OPER.2), for assembly I. |

**OPER.5** NASSIN Read only if IG = 3 or IG = 4 on OPER.1
FORMAT(I5)

| Columns | Variable | Description |
|---|---|---|
| 1-5 | NASSIN | Number of assemblies for which channel inlet flow distribution is specified. |

**OPER.6** IA,(CINC(IA,IC),IC=1,NCHANA(IA))
Read only if NASSIN > 0 on OPER.5
FORMAT(I5,12E5.0)

| Columns | Variable | Description |
|---|---|---|
| 1-5, | IA | Identification number of assembly with specified channel inlet flow distribution. |

| Columns | Variable | Description |
|---|---|---|
| 6-10, 11-15, 16-20, etc. | CINC(IA,IC) | Inlet mass flux, normalized to GIN on OPER.2, for the ICth channel of assembly IA. (Up to 12 values for CINC may be specified on a line. If NCHANA(IA) is greater than 12, repeat this line, beginning in column 6, as many times as necessary to enter NCHANA(IA) values.) |

*** OPER.6 is read NASSIN[OPER.5] times ***

#### 2.11.2.3 Assembly Heat Generation Distribution

OPER.7 (PDNA(N),N=1,NASSEM[CHAN.1]) Read only if NRPF > 0 on OPER.1
FORMAT(16E5.0)

| Columns | Variable | Description |
|---|---|---|
| 1-5, 6-10, 11-15, etc. | PDNA(N) | Heating rate for assembly N;<br>a) normalized to PDN on OPER.2 if NRPF = 1 on OPER.1.<br>b) in units MBtu/h-ft$^3$ if NRPF = 2 on OPER.1. (PDN on OPER.2 is ignored.) |

OPER.8 (DPA(I),I=1,NASSEM[CHAN.1]) Read only if NDPA > 0 on OPER.1
FORMAT(12E5.0)

| Columns | Variable | Description |
|---|---|---|
| 1-5, 6-10, etc. | DPA(I) | Pressure drop (psi) for assembly I. (Note: Supersedes DPS on OPER.2. Used only if ITDP = 1 on OPER.1 and NETWK = 0 on DRAG.1.) |

### 2.11.3 Transient Forcing Function Tables

The input on lines OPER.9 through OPER.15 specifies forcing functions on the various operating parameters. This input is optional and is read only when the appropriate flags on OPER.1 (NP,NH,NG,NHX,NQ) are nonzero.

### 2.11.3.1 System Pressure Transient

**OPER.9** (YP(I),FP(I),I=1,NP) Read only if NP > 0 on OPER.1
FORMAT(12E5.0)

| Columns | Variable | Description |
|---|---|---|
| 1-5, 11-15, etc. | YP(I) | Transient time (s) for the Ith element of system pressure transient table. |
| 6-10, 16-20, etc. | FP(I) | Fraction of steady-state system pressure at transient time YP(I). |

### 2.11.3.2 Inlet Enthalpy or Temperature Transient

**OPER.10** (YH(I),FH(I),I=1,NH) Read only if NH > 0 on OPER.1
FORMAT(12E5.0)

| Columns | Variable | Description |
|---|---|---|
| 1-5, 11-15, etc. | YH(I) | The transient time (s) for the Ith element of enthalpy (temperature) forcing function table. |
| 6-10, 16-20, etc. | FH(I) | The fraction of inlet enthalpy (if IHH = 0 or 2) or the fraction of inlet temperature (if IHH = 1 or 3), normalized to steady state HIN [OPER.2], at the transient time YH(I). |

### 2.11.3.3 Inlet Flow or Pressure Drop Transient

**OPER.11** (YG(I),I=1,NG) Read only if NG > 0 on OPER.1
FORMAT(12E5.0)

| Columns | Variable | Description |
|---|---|---|
| 1-5, 6-10, etc. | YG(I) | The transient time (s) for the Ith element of inlet flow or pressure drop forcing function tables. |

**OPER.12** ((FG(I,J),I=1,NG),J=1,NGPRFL) Read only if NG > 0 on OPER.1
FORMAT(12E5.0)

| Columns | Variable | Description |
|---|---|---|
| 1-5, 6-10, etc. | FG(I,J) | The fraction of steady-state inlet flow (or pressure drop), normalized to GIN (or DPS), at the transient time YG(I), for the Jth forcing function table. |

*** OPER.11 is read NGPRFL times ***

### 2.11.3.4 Exit Enthalpy Transient

**OPER.13** (YHX(I),FHX(I),I=1,NHX) Read only if NHX > 0 on OPER.1
FORMAT(12E5.0)

| Columns | Variable | Description |
|---|---|---|
| 1-5, 11-15, etc. | YHX(I) | The transient time (s) for the Ith element of exit enthalpy forcing function table. |
| 6-10, 16-20, etc. | FHX(I) | The fraction of steady-state exit enthalpy (if IHH = 0 or 2), or exit temperature (if IHH = 1 or 3), specified in HOUT on OPER.1, at the transient time YHX(I). |

### 2.11.3.5 Heating Rate Transient

**OPER.14** (YQ(I),I=1,NQ) Read only if NQ > 0 on OPER.1.
FORMAT(12E5.0)

| Columns | Variable | Description |
|---|---|---|
| 1-5, 6-10, etc. | YQ(I) | The transient time (s) for the Ith element of heating rate forcing function table. |

OPER.15 ((FQ(I,J),I=1,NQ),J=1,NQPRFL) Read only if NQ > 0 on OPER.1
FORMAT(12E5.0)

| Columns | Variable | Description |
|---|---|---|
| 1-5, 6-10, etc. | FQ(I,J) | The fraction of steady-state heat generation, normalized to PDN on OPER.2, at transient time YQ(I) for the Jth forcing function table. |

*** OPER.15 is read NQPRFL times ***

### 2.11.4 Axial Heat Generation Profiles

The default axial heat generation profile is a uniform distribution along the full axial length. This option is specified by entering NAXP as zero on OPER.1. Nonuniform axial heat generation profiles can be specified by setting NAXP to the number of heat generation profiles needed, and entering tables describing the axial heat generation distributions on OPER.16 and OPER.17. Axial heat generation profiles are numbered sequentially, from 1 to NAXP, in the order they are entered on OPER.16 and OPER.17. (If the default uniform profile is used, it is automatically numbered heat generation profile 1. The particular profile to be used in an assembly is specified by input on CHAN.5.)

OPER.16 NAX(I) Read only if NAXP > 0 on OPER.1
FORMAT(I5)

| Columns | Variable | Description |
|---|---|---|
| 1-5 | NAX(I) | Number of pairs of entries in the Ith axial heat generation profile table. |

OPER.17 (Y(L,I),AXIAL(L,I),L=1,NAX(I)) Read only if NAXP > 0 on OPER.1.

Read only if NAXP > 0 on OPER.1

FORMAT(12F5.3)

| Columns | Variable | Description |
|---|---|---|
| 1-5, 11-15, 21-25, etc. | Y(L,I) | Relative location (X/L) of the Lth element of axial heat generation forcing function I. (Must include endpoints 0.0 and 1.0.) |
| 6-10, 16-20, 26-30, etc. | AXIAL(L,I) | Relative heating rate at Y(I,L), normalized to average steady-state heat generation. |

*** OPER.16 and OPER.17 are read in sequence NAXP[OPER.1] times ***

## 2.12 GROUP CALC - CALCULATIONAL PARAMETERS

This group defines the calculational parameters needed to tell the code how to numerically solve the problem. The input specifies the simulation time and time step size for transients, and the various convergence limits, damping and acceleration factors, and iteration limits required for the solution.

**CALC.1** AGROUP,ISCHEME,IROLL,ITSTEP
FORMAT(A4,1X,3I5)

| Columns | Variable | Description |
|---|---|---|
| 1-4 | AGROUP | Enter CALC |
| 6-10 | ISCHEME | Transverse momentum solution flag:<br>= 0; transverse momentum solved for crossflows (default).<br>= 1; transverse flow set to zero (no solution of transverse momentum equation). |
| 11-15 | IROLL | Roll option flag:<br>= 0; no roll: all variables reside in core at all times.<br>= 1; only variables for 3 axial levels reside in core at any one time. |
| 16-20 | ITSTEP | Flag for variable time step table:<br>= 0; constant time step.<br>> 0; number of entries specify table of time step size versus time on CALC.4. |

Damping and acceleration factors used in the solution are entered on CALC.2. All factors are applied as

$$X^n = \alpha X^n + (1-\alpha) X^{n-1} \tag{2.13}$$

where X = calculational variable

$\alpha$ = damping or acceleration factor

n = current iteration number.

Convergence limits are defined in nondimensional form so that the relative magnitude of the affected variable does not affect the rate of convergence.

<u>CALC.2</u> TTIME,WERRY,FERROR,HERROR,QERROR,DAMPNG,ACCELY,ACCELF,ACCRHO,ACCELW, ACCROD,ACCAX

FORMAT(12E5.0)

| Columns | Variable | Description |
|---|---|---|
| 1-5 | TTIME | Total transient time (s). |
| 6-10 | WERRY | Inner loop convergence limit for the recirculation solution scheme. (Default is 1.0E-3.) |
| 11-15 | FERROR | External axial flow convergence limit, defined for the implicit axial momentum equation as the maximum allowable error for iterative axial flows. If the error is greater than FERROR, another iterative sweep of the entire bundle is made. (Default is 1.E-3.) |
| 16-20 | HERROR | Convergence limit for fluid enthalpy. (Default is 0.001.) |
| 21-25 | QERROR | Convergence limit for total energy. (Default is 0.001.) |
| 26-30 | DAMPNG | Damping factor for pressure drop term in the momentum equation. (Default is 1.0.) |
| 31-35 | ACCELY | Accelerator for the iterative Gauss-Siedel solution of the momentum equations. (Default is 1.6.) |
| 36-40 | ACCELF | Damping factor for iterative axial flow. (Default is 0.7.) |

| Columns | Variable | Description |
|---|---|---|
| 41-45 | ACCRHO | Damping factor for change in fluid density. (Default is 1.0.) |
| 46-50 | ACCELW | Acceleration factor for the solid structure energy equation solution. (Default is 1.2.) |
| 51-55 | ACCROD | Damping factor for the rod energy solution. (Default is 0.5.) |
| 56-60 | ACCAX | Damping factor for the axial energy rebalancing. (Default is 1.0.) |

**CALC.3** NDT,NTRIES
FORMAT(2I5)

| Columns | Variable | Description |
|---|---|---|
| 1-5 | NDT | Total number of time steps allowed. For implicit transients, the time step size is (TTIME/NDT) unless a time step table is specified by ITSTEP > 0 on CALC.1. |
| 6-10 | NTRIES | Maximum number of external iterations allowed. (Default is 20.) |

**CALC.4** (YT(I),FT(I),I=1,ITSTEP) Read only if ITSTEP > 0 on CALC.1.
FORMAT(12E5.0)

| Columns | Variable | Description |
|---|---|---|
| 1-5, 11-15, 21-25, etc. | YT(I) | Time (s) for the Ith maximum time step. (Note: Table must begin with time = 0.0 s.) |
| 6-10, 16-20, 26-30, etc. | FT(I) | Maximum time step (s) allowed at time YT(I). |

## 2.13 GROUP OUTP - OUTPUT OPTIONS

This group allows the user to select the information to be written to the output file. The default is to print everything; i.e., all channels, rods, lateral flow connections, and solid structure nodes, for every axial level, and at every time step in a transient. But for large problems, or long-running transients, the user may want to limit the output, either by restricting the number of channels, rods, lateral flow connections, or solid structure nodes for which output will be produced, or by limiting the frequency of output generated during a transient.

OUTP.1 AGROUP,NCOUT,NROUT,NGOUT,NWOUT,NALL,NSKIPX,NSKIPT,NPCHAN,NPROD,
NPNODE,NPGAP,NPAVG,NPWALL
FORMAT(A4,1X,5I1,8I5)

| Columns | Variable | Description |
|---|---|---|
| 1-4 | AGROUP | Enter OUTP |
| 6 | NCOUT | Flag for channel output:<br>= 0; no channel printout.<br>= 1; channel printout controlled by NPCHAN. |
| 7 | NROUT | Flag for rod output:<br>= 0; no rod printout.<br>= 1; rod printout controlled by NPROD. |
| 8 | NGOUT | Flag for lateral flow connection output:<br>= 0; no lateral flow connection printout.<br>= 1; lateral flow connection printout controlled by NPGAP. |
| 9 | NWOUT | Flag for solid node output:<br>= 0; no solid node printout.<br>= 1; solid node printout controlled by NPWALL. |

| Columns | Variable | Description |
|---|---|---|
| 10 | NALL | Flag for output of all information:<br>= 0; output is governed by NCOUT, etc. flags.<br>= 1; everything is printed, regardless of values assigned to other flags. |
| 11-15 | NSKIPX | Number of axial nodes to skip when printing results. |
| 16-20 | NSKIPT | Number of time steps to skip between printed results. |
| 21-25 | NPCHAN | Flag for number of channels to be printed if NCOUT = 1:<br>= 0; print all channels.<br>> 0; print NPCHAN channels, designated on OUTP.2. |
| 26-30 | NPROD | Flag for number of rods to be printed if NROUT = 1:<br>= 0; print all rods.<br>> 0; print NPROD rods, designated on OUTP.3. |
| 31-35 | NPNODE | Flag for fuel temperature node printout, if NROUT = 1:<br>= 0; print rod centerline, fuel surface and cladding surface temperatures.<br>> 0; print cladding surface temperature and temperatures of NPNODE equally spaced interior node temperatures. (Used only if the conduction model is activated; NC > 4 on RODS.1.) |
| 36-40 | NPGAP | Flag for number of lateral flow connections to be printed if NGOUT = 1:<br>= 0; print all lateral flow connections.<br>> 0; print NPGAP lateral flow connections, specified on OUTP.4. |

| Columns | Variable | Description |
|---|---|---|
| 41-45 | NPAVG | Flag for assembly average and channel exit values to be printed:<br>= 0; no additional output.<br>= 1; channel exit values printed.<br>= 2; assembly-average values printed.<br>= 3; channel exit and assembly-average values printed. |
| 46-50 | NPWALL | Flag for solid node printout if NWOUT = 1:<br>= 0; print all solid nodes.<br>> 0; print NPWALL solid nodes, specified on OUTP.5. |

### 2.13.1 Channels to be Printed

**OUTP.2** (PRINTA(I),PRINTC(I),I=1,NPCHAN)

Read only if NCOUT = 1 and NPCHAN > 0 on OUTP.1

FORMAT(16I5)

| Columns | Variable | Description |
|---|---|---|
| 1-5, 11-15, etc, | PRINTA(I) | Identification number of assembly containing channel PRINTC(I). |
| 6-10, 16-20, etc. | PRINTC(I) | Identification number of the Ith channel for which output is to be printed. |

### 2.13.2 Rods to be Printed

**OUTP.3** (PRINTA(I),PRINTR(I),1=1,NPROD)

Read only if NROUT = 1 and NPROD > 0 on OUTP.1

FORMAT(16I5)

| Columns | Variable | Description |
|---|---|---|
| 1-5, 11-15, etc. | PRINTA(I) | Identification number of assembly containing rod PRINTR(I). |
| 6-10, 16-20, etc. | PRINTR(I) | Identification number of the Ith rod for which output is to be printed. |

### 2.13.3 Lateral Flow Connections to be Printed

**OUTP.4** (PRINTA(I),PRINTG(I),I=1,NPGAP)

Read only if NGOUT = 1 and NPGAP > 0 on OUTP.1

FORMAT(16I5)

| Columns | Variable | Description |
|---|---|---|
| 1-5, 11-15, etc. | PRINTA(I) | Identification number of assembly containing lateral flow connection PRINTG(I). |
| 6-10, 16-20, etc. | PRINTG(I) | Identification number of the Ith lateral flow connection for which output is to be printed. |

### 2.13.4 Solid Nodes to be Printed

**OUTP.5** (PRINTW(I),I=1,NPWALL)

Read only if NWOUT = 1 and NPWALL > 0 on OUTP.1

FORMAT(12I5)

| Columns | Variable | Description |
|---|---|---|
| 1-5, 6-10, 11-15, etc. | PRINTW(I) | Identification number of Ith solid node for which temperatures are to be printed. |

### 2.13.5 Transient Output Interval

**OUTP.6** TRANT Read only if NSKIPT > 1 on OUTP.1

FORMAT(F5.3)

| Columns | Variable | Description |
|---|---|---|
| 1-5 | TRANT | Time interval (in seconds) between output in a transient. (Output will be produced every NSKIPT time steps, or every TRANT seconds, whichever is encountered first.) |

# 3.0 COBRA-SFS USER'S GUIDE

The line-by-line input instructions for the COBRA-SFS code are presented in Section 2.0. The input instructions specify the input format to be used and provide brief definitions of the input variables. The purpose of the user's guide presented in this section is to give a more complete explanation of the input requirements, to illustrate the models and conventions used, and to provide recommended values for specific variables when modeling certain types of spent fuel storage problems.

To perform a simulation, the user must specify four basic groups of information: the physical properties of the solid materials and working fluid, the geometry of the problem, the constitutive models for the flow and heat transfer solutions, and the boundary conditions. In addition, code parameters controlling the numerical solution procedure and code output are required. The input for material properties, which is read in group PROP, is discussed in Section 3.1. The input for problem geometry, which is read in groups CHAN, VARY, RODS, SLABS, and RADG, is discussed in Section 3.2. The input for the constitutive models, which is read in groups HEAT and DRAG, is discussed in Section 3.3. The input for boundary conditions, which is read in groups BDRY and OPER, is discussed in Section 3.4. The code control parameters, which are read in groups CALC and OUTP, are discussed in Section 3.5.

## 3.1 MATERIAL PROPERTIES

The material properties for both the fluid and solid structure materials are specified in group PROP. The fluid properties are obtained from a user-specified property table, read on input line PROP.2. A total of NPROP[PROP.1] entries are read, with variables expressed as a function of fluid temperature, TEMLIQ. The values used in the code are obtained by linear interpolation of the user specified property table based on the local fluid temperature. The saturation pressure, PLIQ, is used only to determine whether a liquid working fluid has exceeded its saturation temperature. When saturation pressure is not a concern, as in the case of a gas, PLIQ is left blank. All the other fluid properties--enthalpy (HLIQ), thermal conductivity (CONLIQ), specific

heat (CPLIQ), specific volume (VLIQ), and viscosity (VISLIQ)--are required for each problem.

The solid material properties are specified on input line PROP.3 for NSPROP[PROP.1] materials. Each solid material is assigned an identification number, AMAT, which is used to identify the material type for solid structure nodes in SLAB.3 and plenum connections in BDRY.7. Properties are assumed constant for all temperatures in this version of the code. The specific heat (CPSOL) and density (RHOSOL) are used only to calculate the transient energy storage term and may be neglected in a steady-state solution. The thermal conductivity (CONSOL) is used to calculate axial solid conduction (when the slab cross-sectional areas WALLXC[SLAB.3] are specified), solid radial conduction (when RDIMA and RDIMB in SLAB.2 are specified) and solid-to-plenum heat transfer (when AREAXCP[BDRY.7] is specified). If groups SLAB and BDRY are not read, a solid material property table is not required.

## 3.2 PROBLEM GEOMETRY

A simplified sketch of a typical spent fuel dry storage cask is shown in Figure 3.1. The cask consists of a solid structure shell and a cavity region. The cavity contains spent fuel assemblies or consolidated fuel canisters that are separated by a structural basket. Convection heat transfer within the cask removes decay heat by circulating fluid up through the heated assemblies and down through the cooler regions of the cask. When fluid exits the basket region, it enters an open region where it mixes with fluid from other assemblies before re-entering the basket region. Decay heat is also removed from the spent fuel assemblies by conduction through the fluid or solid basket and by surface-to-surface thermal radiation. The heat is then conducted through the cask shell to the outer surface, where it is removed by natural convection and radiation.

A typical COBRA-SFS cask model, illustrated in Figure 3.2, is divided into three regions: an upper plenum, a channel region, and a lower plenum. The channel region models the fuel assemblies, basket, and cask shell in the

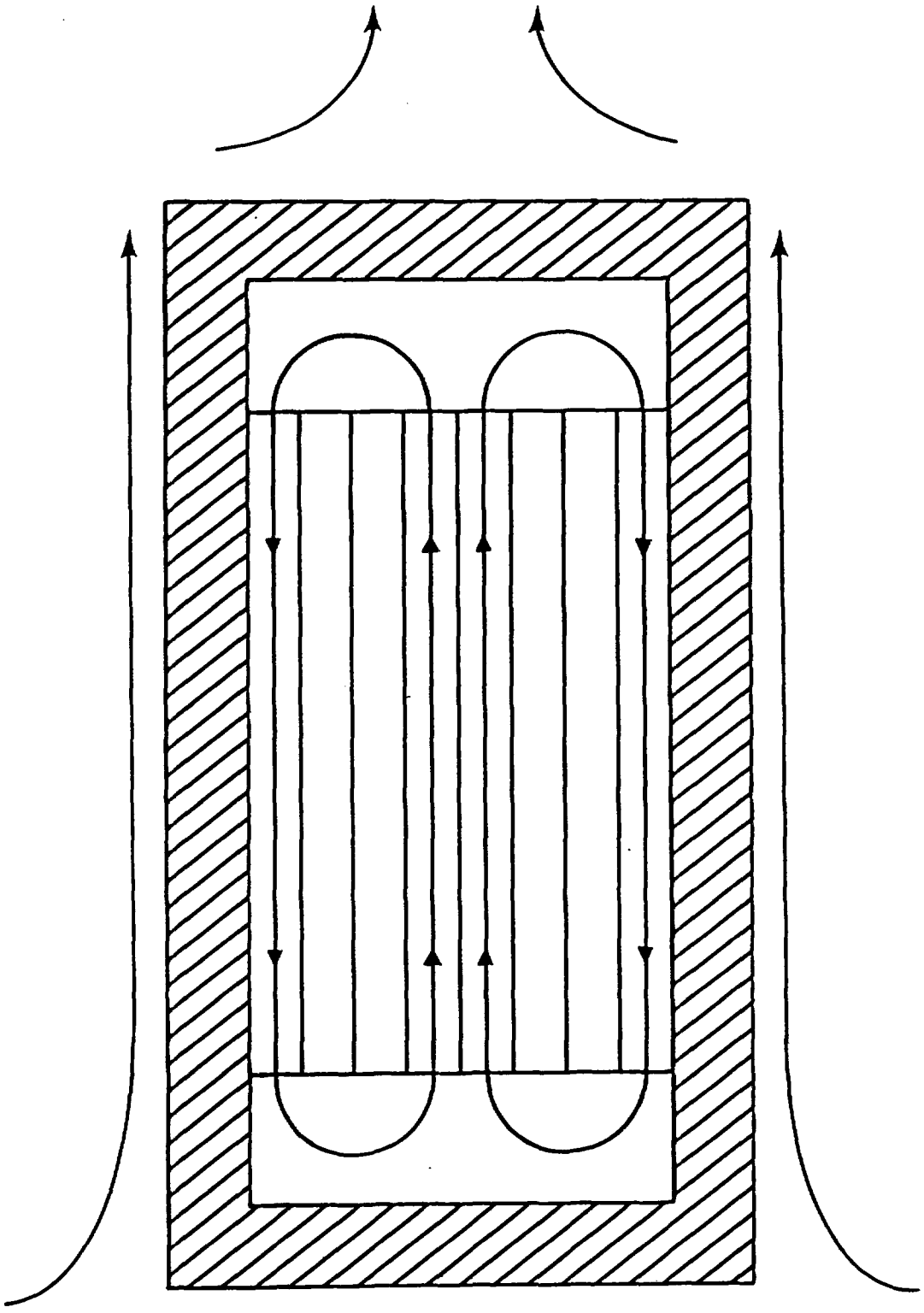

FIGURE 3.1. Cut-Away Sketch of a Typical Spent Fuel Cask

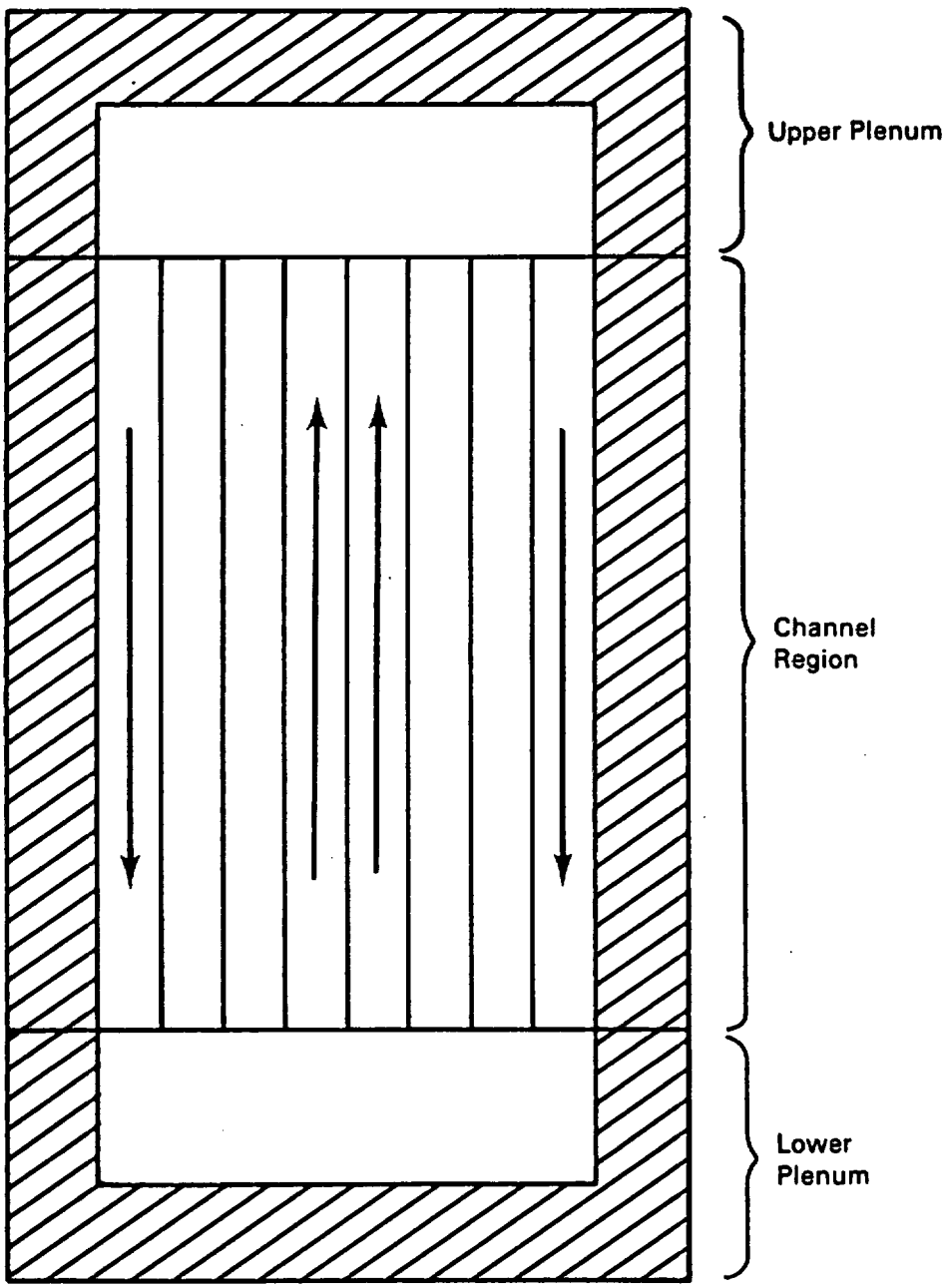


FIGURE 3.2. COBRA-SFS Model of a Spent Fuel Cask

central region of the cask. The channel region is divided into several axial levels. Each level consists of a set of fluid, solid structure, and fuel rod nodes that are used to represent the flow and temperature distribution within the cask. The fluid regions are modeled using channels that are defined in group CHAN and described in Section 3.2.1. The fuel rod models are defined in group RODS and described in Section 3.2.2. The solid structures, such as the assembly basket and cask shell, are modeled using solid structure nodes or "slabs", which are defined in group SLAB and described in Section 3.2.3. If thermal radiation is modeled, the required viewfactor information is read in group RADG and described in Section 3.2.4.

The upper and lower plenums are both defined as a common fluid region connected to channels in the problem. It is assumed that all flow entering the plenum is instantaneously and perfectly mixed. The plenum heat transfer models are described with the thermal boundary conditions in Section 3.4.1.

One important limitation of the COBRA-SFS code is that the cross sectional geometry is assumed to be axially uniform throughout the length of the subchannel model region. However, there are some exceptions. The cross sectional areas of the fluid subchannels and the gap connection between adjacent subchannels may vary as a function of axial location by specifying the appropriate values in group VARY. Other axially varying quantities are fuel rod material type [RODS.7 and 8] and side thermal boundary conditions [BDRY.5].

### 3.2.1 Flow Field Geometry

The information used to develop the flow field geometry model is read in group CHAN. The COBRA-SFS code, like all other COBRA codes, is formulated on a quasi-three-dimensional basis designed to efficiently model the flow in a rod array where the predominant direction of flow is parallel to the rods. The flow field is modeled as an array of flow channels that can communicate laterally through gaps by crossflow. The direction of flow through a gap is perpendicular to the axial flow direction, but it is not constrained to be in any particular coordinate direction. This simplification of the lateral momentum equation results in great flexibility in modeling complex geometries.

There are certain limitations to the COBRA-SFS flow field modeling capability. One is that fluid-to-fluid shear is not modeled in the momentum equations. Therefore, the code is limited to channel flows and cannot solve a free field flow problem. Another limitation is that the flow geometry is assumed to be essentially uniform throughout the length of the subchannel region, with the exception that subchannel cross sectional areas and gap widths may vary with axial location. A third limitation is that the transverse momentum equation does not have a gravitational force term in this version of the code.

#### 3.2.1.1 Axial Nodalization

The subchannel model region is divided into NDX[CHAN.1] axial nodes. Unless otherwise specified, the nodes are assumed to be of uniform length, calculated by dividing the total axial length, Z[CHAN.2], by NDX. If variable axial noding is desired, NAZONE, which is the number of variable axial zone regions, is specified in CHAN.1. Each axial zone region consists of a number of nodes, NSTEPS[CHAN.3], that have a node length VDX[CHAN.3]. Variables NSTEPS and VDX are read in pairs NAZONE times. Care must be taken so that the sum of NSTEPS equals NDX and the sum of VDX*NSTEPS equals Z.

#### 3.2.1.2 Assembly Description

An assembly is defined as a group of subchannels that may communicate laterally with each other but do not communicate directly with other assemblies. If two groups of channels communicate with each other in the subchannel model region, they should be modeled using one assembly. The number of assemblies in a problem is specified in NASSEM[CHAN.1]. The input lines containing assembly description information, CHAN.4 through CHAN.6, are read in sequence NASSEM[CHAN.1] times, once for each assembly. CHAN.4 is read to define the assembly number (NASS) and the assembly type number (ITYPA). Each assembly must have a unique number, (one through NASSEM), but any number of assemblies can be defined as the same type. An assembly type is defined by the number of channels and their interconnections, as specified by input on CHAN.6. The assembly type geometry data is entered only once, for the first assembly of that type. For subsequent assemblies of that type, it is not necessary to

enter CHAN.6; the value entered for ITYPA on CHAN.4 will be automatically recognized as a previously defined type, and the geometry data copied into the appropriate arrays. For example, sixteen BWR assemblies will require sixteen CHAN.4 lines but only one set of CHAN.5 and CHAN.6 lines if the assembly geometry does not change.

The flow and heat transfer correlations, axial heat generation profile, and transient forcing functions to be used in a particular assembly are identified by input on CHAN.5. The axial heat flux profile, which corresponds to those read in OPER.16, is read as NAFLX[CHAN.5]. The heat transfer coefficient correlation number, which corresponds to those read in HEAT.2, is read as NFLMC[CHAN.5]. The heat generation versus time forcing function number, which corresponds to those read in OPER.15, is read as NHFVT[CHAN.5]. The pressure-drop or flow-versus-time forcing function number, which corresponds to those read in OPER.11, is read as NPFVT[CHAN.5]. The default subchannel friction factor correlation number, which corresponds to those read in DRAG.2, is read as MDFLT[CHAN.5].

The flow region within an assembly is divided into an array of flow channels that can communicate laterally through gaps by crossflow. The number of channels in each assembly NASS is specified in NCHANA[CHAN.4]. The channels and connections that can be modeled with this approach are essentially arbitrary. The user can select the level of detail appropriate for the problem under consideration. The most detailed modeling for rod bundle geometries is obtained with subchannels. Less detail, usually resulting in less cost and smaller memory requirements, can be obtained by using lumped channel models. The appropriate procedure for developing lumped channel models is discussed in Section 3.2.5.

A subchannel is generally defined as the flow area between fuel rods in a regular rectangular or triangular array, as illustrated in Figure 3.3. A subchannel is uniquely identified in the code by number and assembly number,

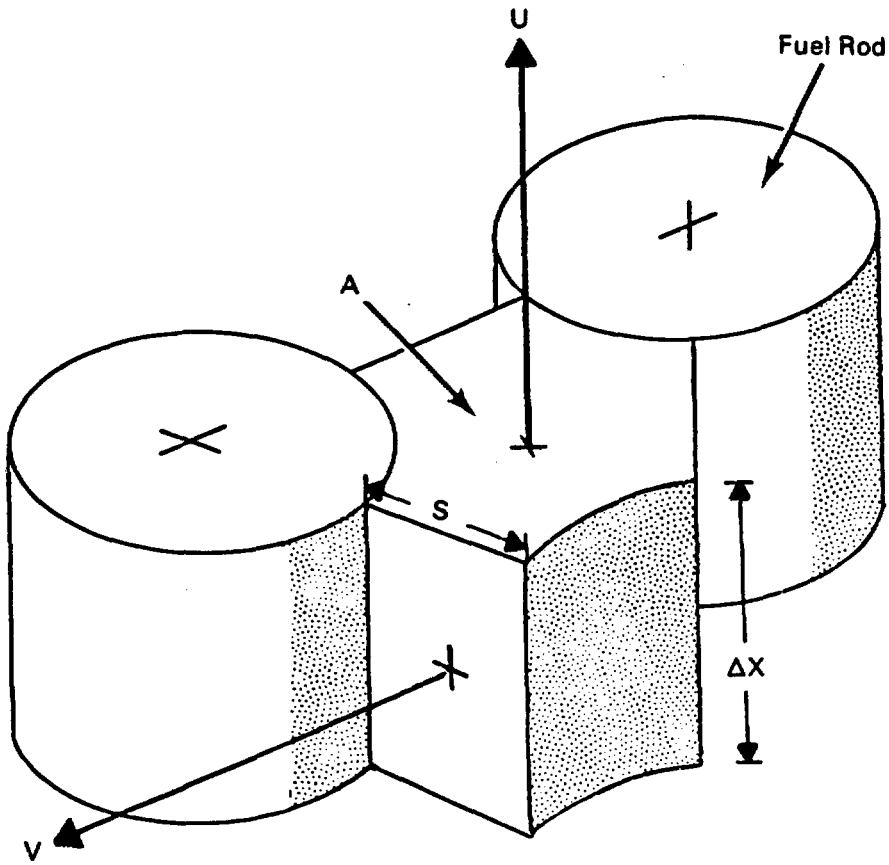


FIGURE 3.3. Subchannel Control Volume

and has associated with it a cross sectional area, wetted perimeter, and heated perimeter. The geometry input for a channel is read on CHAN.4, along with information describing its connections to adjacent channels. The channel area (AC), is simply the cross sectional area of the region defining a channel. The wetted perimeter (PW) is the sum of the perimeters of all solid surfaces facing the channel, and the heated perimeter (PH) is the sum of the perimeters of all solid heated surfaces facing the channel. A typical nodalization for an 8x8 BWR spent fuel assembly is shown in Figure 3.4 for a full assembly and in Figure 3.5 for an assembly with symmetry along the diagonal.

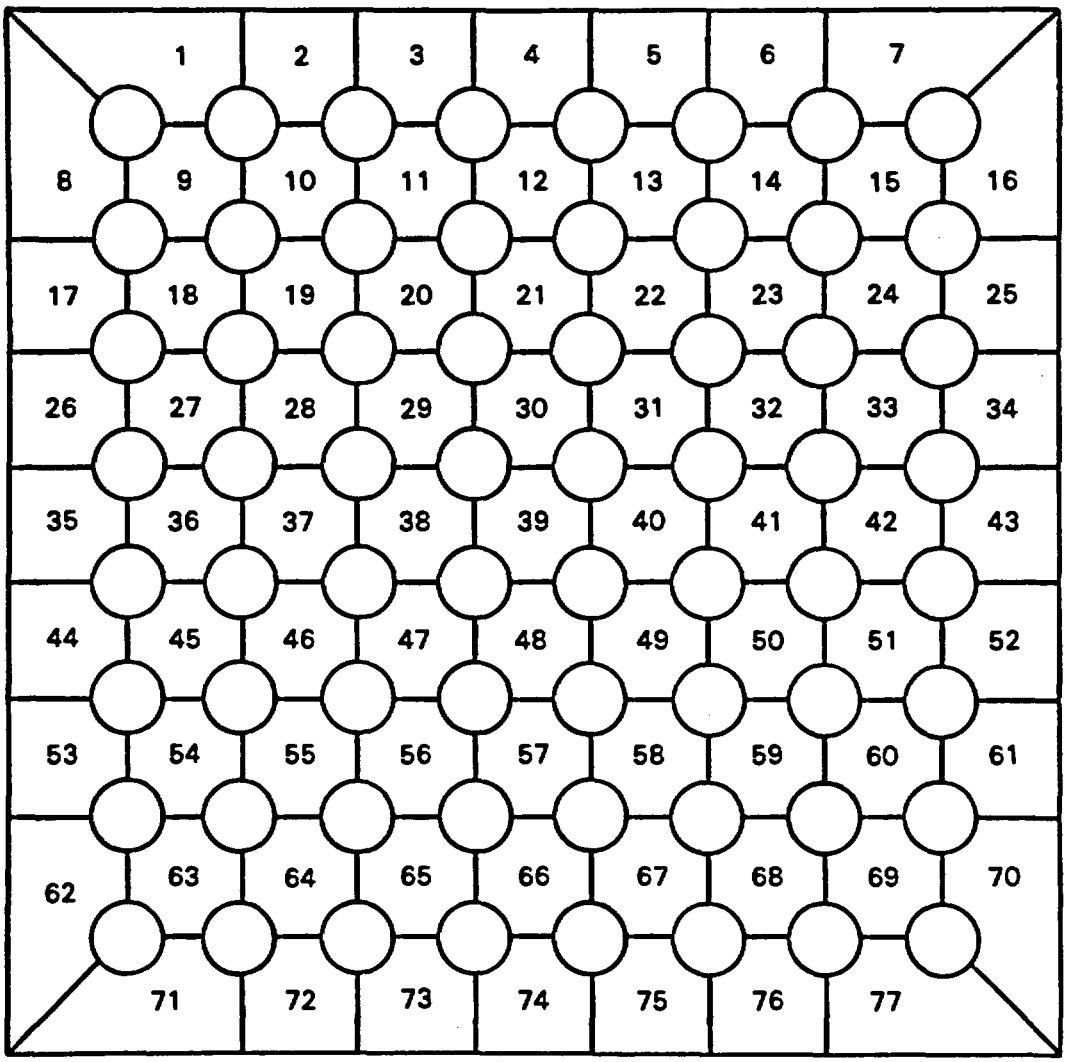


FIGURE 3.4. Subchannel Nodalization of a Typical 8x8 BWR Spent Fuel Assembly

The channel connection input consists of the index number of each adjacent channel and the geometry of the gap. The geometry of a gap is described by its lateral width (GAPS) and centroid length (DIST). Figure 3.6 shows the control volume for a gap connecting two subchannels. COBRA-SFS uses this information to number the gap connections by a simple and relatively straight forward convention. Starting with channel 1, all connections from that channel are numbered, in ascending order. The numbering continues with the connections from channel 2, again in ascending order, except for connections looking back

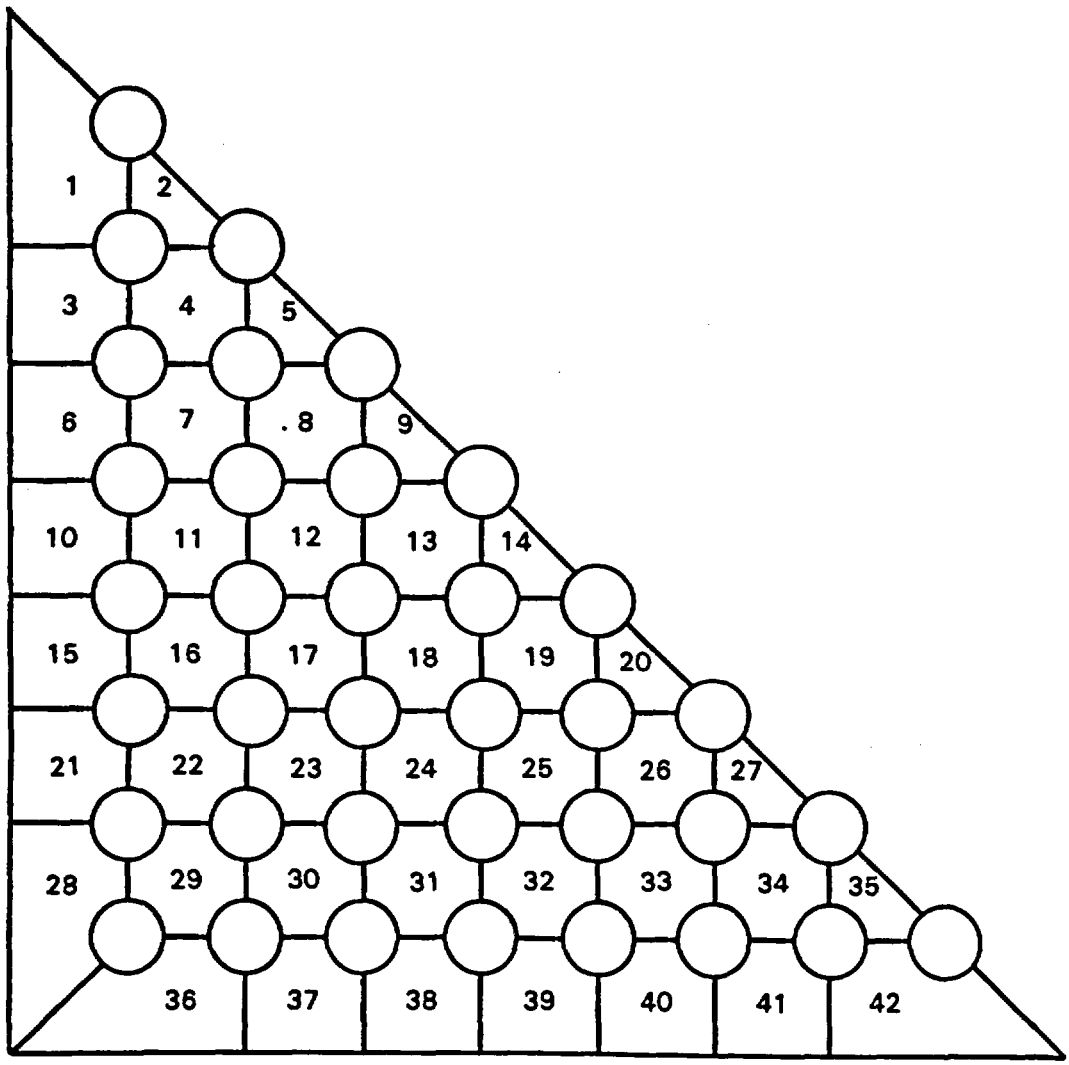


FIGURE 3.5. Subchannel Nodalization of an 8x8 BWR Spent Fuel Assembly with Symmetry Along the Diagonal

to channel 1, which already have been enumerated. Thus, gap connections are entered only once for a connecting pair, with the lower number channel always connecting to a higher number channel. The numbering proceeds through the connections for all channels in the assembly, and in this manner all connections between the channels are identified. The code numbers the gaps in the sequence they are input and fills several internal arrays that identify the connection pattern for later use.

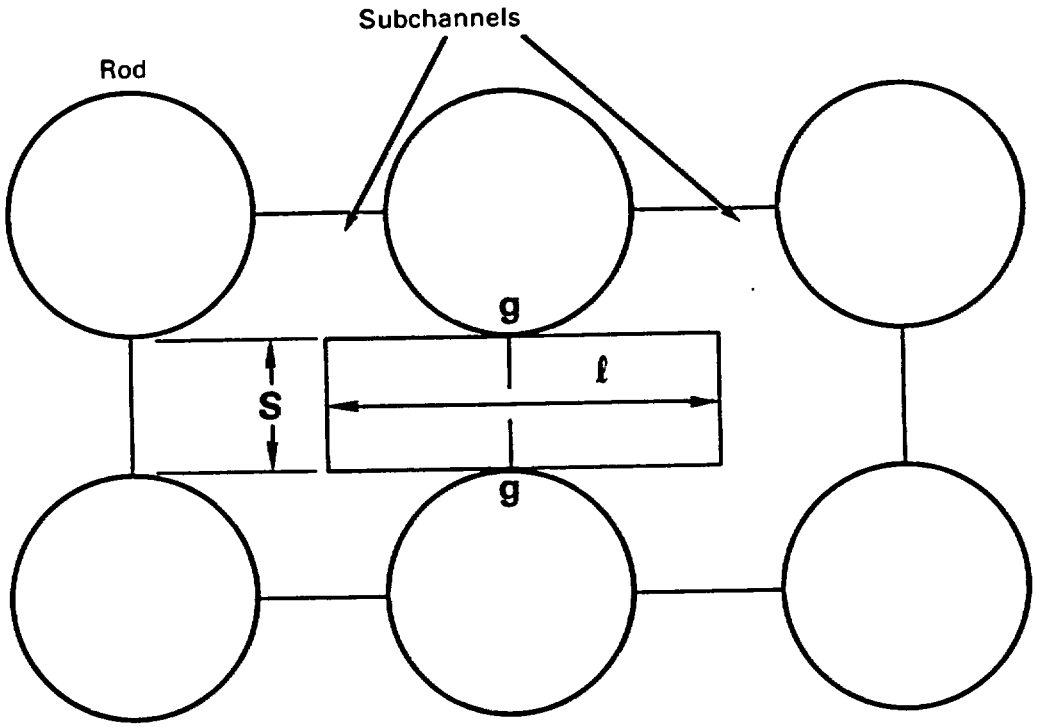


FIGURE 3.6. Transverse Flow Control Volume

COBRA-SFS checks to see if relevant dimension limits have been exceeded and looks for gaps that connect higher-numbered channels to lower-numbered channels. If such errors are encountered, appropriate error messages are printed and the run is aborted. But it is up to the user to verify that the gaps actually connect the channels in the manner desired. The number of connections to any one channel is constrained only by the dimension parameter MI (see Section 4.0).

The geometry input data that must be supplied for each gap connection is less physically obvious than that for the subchannels. The gap width and length define the control volume for crossflow between the adjacent channels. The gap width is the width of the space through which the two adjacent channels communicate, e.g., the space between two adjacent fuel rods (shown as distance S in Figure 3.6). The length of the control volume, however, is the length over which the crossflow exists, and hence is a somewhat arbitrary dimension.

The recommended length is the distance between the centroids of adjacent channels, and, for subchannels in a normal square array, this reduces to the rod pitch.

#### 3.2.1.3 Channel Area and Gap Variation

Group VARY is used to specify variations in channel flow area and lateral flow connection width as a function of axial location. If data is not entered for this group, all channel areas and lateral flow connection widths are assumed constant over the entire length of the channel region.

The number of channels with area variations is specified as NAFACT in VARY.1. The variations are read in tabular form as a function of axial location. The number of axial locations for channel area variation is specified as NAXL in VARY.1. The relative axial locations, expressed as a fraction of total axial length, are read as AXL in VARY.2. Only one axial location table is used for all channels. The assembly and channel identification numbers for each channel with area variations are read in VARY.3. A channel area variation factor, AFACT, is read in VARY.4 for each relative axial location AXL in VARY.2. The area factor, obtained by linear interpolation from the axial location table, is multiplied with the nominal subchannel area AC[CHAN.6] to obtain the local area. Lines VARY.3 and VARY.4 are read in pairs, NAFACT times.

The lateral flow connection variations are read using the same logic as the area variations. The number of lateral flow connections for which the width varies axially is NGAPS[VARY.1]. The number of axial locations for connection width variation is NGXL[VARY.1]. The relative axial locations are read as GAPXL in VARY.5. The assembly and lateral flow connection identification numbers are read in VARY.6. The lateral flow connection number is assigned sequentially as the connections are being read on CHAN.6. The lateral connection numbering scheme is described in more detail in Section 3.2.1.2. A connection width variation factor, GFACT, is read in VARY.7 for each relative axial location GAPXL in VARY.5. Lines VARY.6 and VARY.7 are read in pairs, NGAPS times.

### 3.2.2 Rod Geometry

Group RODS is used to define the geometry and material properties for the stored spent fuel rods. The rods can be thermally connected to the fluid by convection and to solid structure nodes and other rods by thermal radiation or contact conduction. The fuel rods can be modeled with temperature dependent fuel properties.

#### 3.2.2.1 Rod Models

Unlike fluid subchannel and solid structure nodes, which have an arbitrary geometry, fuel rods are assumed to be cylindrical. The number of radial finite-difference nodes used in modeling each rod, specified by NC (RODS.1), may be zero, one or several, depending on the level of detail required. Each model is described in more detail below.

The rod heat transfer model is omitted (NC=0) when cladding and fuel temperatures are not required in the calculation. This includes problems where transient effects and thermal radiation are negligible. In this case, the heat generated in the rod is simply divided uniformly among the connected fluid subchannels. Conduction through the fuel rod is not modeled.

A fuel rod with a single radial node (NC=1) is used when the cladding temperature is required in the calculation. This includes problems where the peak cladding temperature is a concern or problems where thermal radiation is important. The cladding temperature is used to calculate the convection heat transfer from the rod to the surrounding rods and solid structure nodes.

A fuel rod with several radial nodes (NC>4) is used when fuel temperatures are required in the calculation. This includes problems where the peak fuel temperature is a concern or where transient effects in the rods are important. The fuel rod is divided into one clad node and (NC-1) fuel nodes as shown in Figure 3.7 when a central void is present, and Figure 3.8 when there is no central void. The innermost and outermost fuel nodes are one-half the thickness of the other nodes and there is a fixed distance, $\Delta r$, between adjacent fuel nodes. A gap between the fuel and cladding is modeled by a user-specified heat transfer coefficient.

For some problems, a significant temperature gradient may occur around the circumference of the rod. In these cases, the rod can be divided into NTHETA(RODS.1) circumferential nodes. For most practical problems, this option is not necessary and should not be used. Special care must be taken when this option is used. This option can only be used when NC>4. Each fuel rod is divided into NTHETA segments which are numbered as individual rods. Therefore, the parameter for the number of rods, MR, must be assigned the value of the number of rods times NTHETA. In the rod-to-fluid connection table described by RODS.3, each segment is individually connected to adjacent subchannels. For problems where thermal radiation is modeled, the radiation exchange factors read in group RADG must correspond to the rod segments defined by NTHETA.

#### 3.2.2.2 Rod Configuration Description

Rods contained within spent fuel assemblies or consolidated canisters are defined by a rod configuration type, denoted by ITYPA(RODS.2). A rod configuration type is determined by the number of rods contained in the assembly, their diameters and radial heat generation factors, and the connections between the rods and channels in the assembly. More than one assembly can have the same rod configuration type. For example, in a cask containing ten 8x8 rod array boiling water reactor (BWR) spent fuel bundles with identical geometry and numbering schemes, only one rod configuration type is needed to model the system.

The rod configuration description input is read in assembly-by-assembly, on RODS.2 and RODS.3. RODS.2 and RODS.3 are read sequentially; RODS.2 defines the rod configuration type for a given assembly, and, on the first encounter of the rod configuration type number, RODS.3 is read to define that type. On subsequent encounters of that rod configuration type number for another assembly, RODS.3 is not read because the previous input describing that rod configuration type is automatically copied into the rod geometry arrays for the assembly. For an assembly that does not contain rods, RODS.2 is read with ITYPA = 0 and NORODS = 0, and RODS.3 is not read for that assembly.

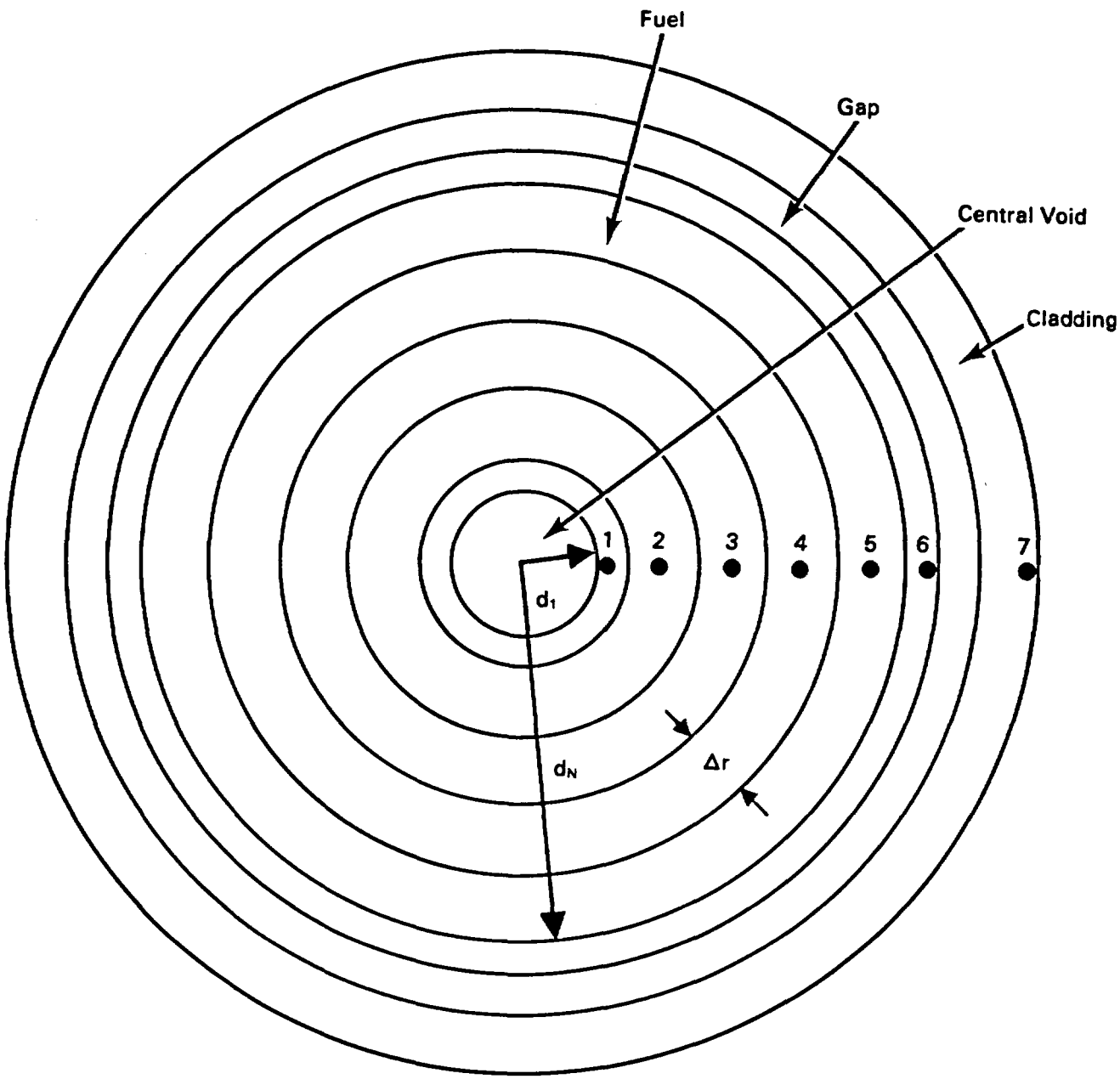


FIGURE 3.7. COBRA-SFS Finite-Difference Fuel Rod Model with Central Void

Typical rod configurations are shown for a 7x7 BWR fuel assembly in Figure 3.9 and for an assembly with symmetry along the diagonal in Figure 3.10.

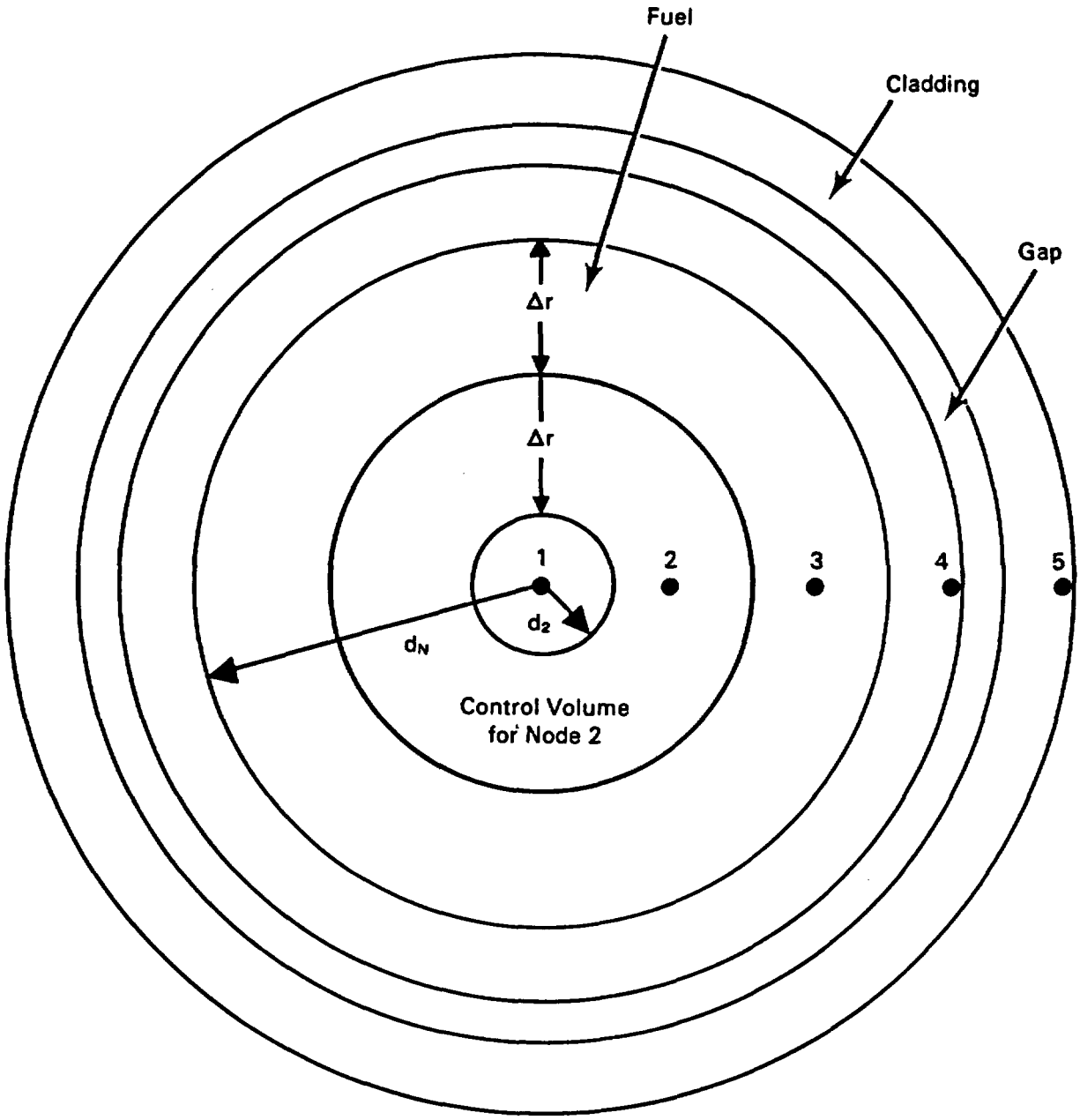


FIGURE 3.8. COBRA-SFS Finite-Difference Fuel Rod Model Without Central Void

The rod numbering is arbitrary except when using radiation exchange factors generated by the auxiliary program RADX-1. RADX-1 calculates exchange factors assuming that the rods are numbered in the sequence shown in Figures 3.9 and 3.10.

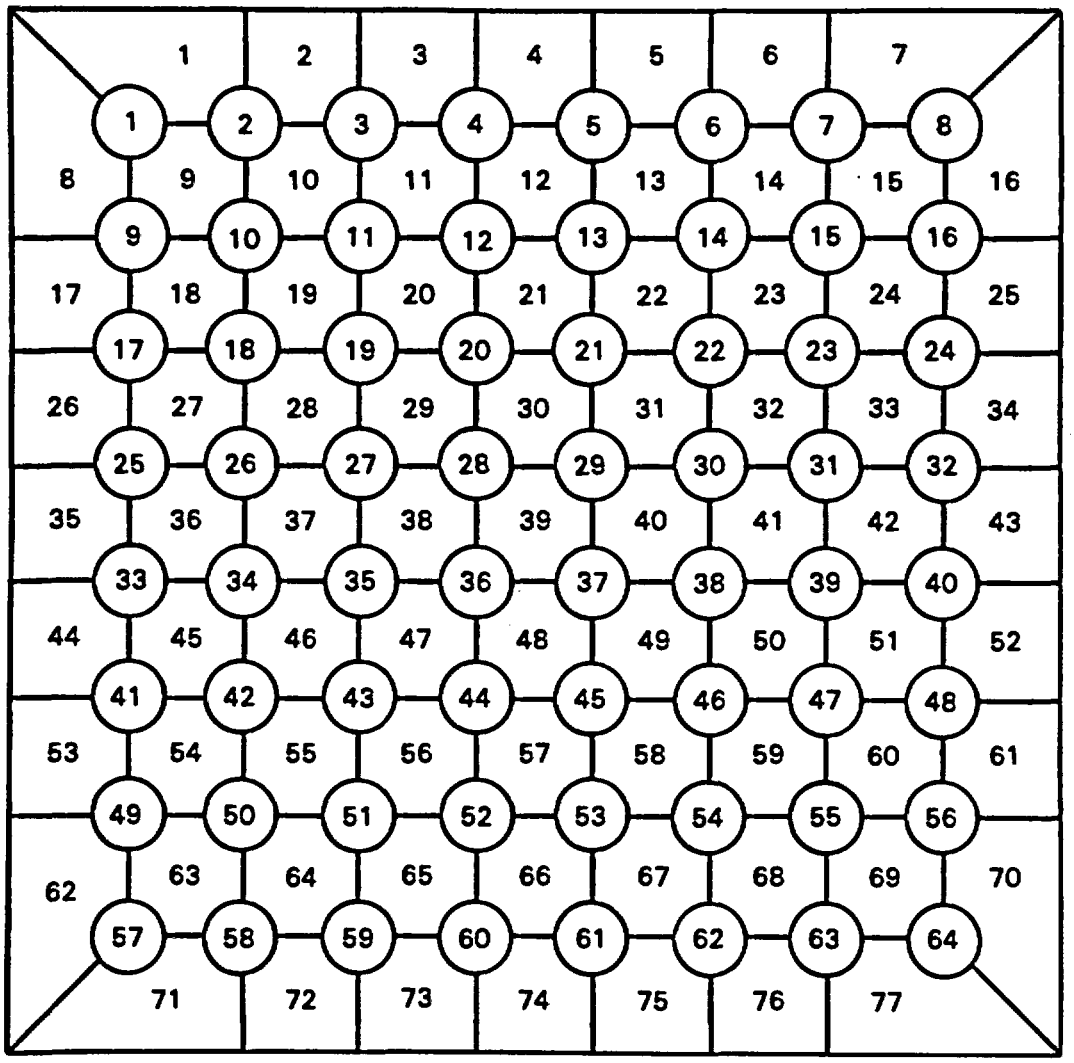


FIGURE 3.9. Rod Configuration for a Typical 8x8 BWR Spent Fuel Assembly

The fuel rod is connected to adjacent channels using the variables LR and PHI in RODS.3. The LR array contains the identification numbers of the adjacent channels and PHI is the fraction of rod perimeter connected to channel LR. For a whole rod, the PHIs must add up to 1.0. When a fraction of a rod is to be modeled, as in the case of problems that are reduced due to symmetry, the PHIs must equal the fraction of the rod being modeled. This modeling convention has the effect of automatically reducing the heat generation and heat transferred from the rod by the appropriate factor.

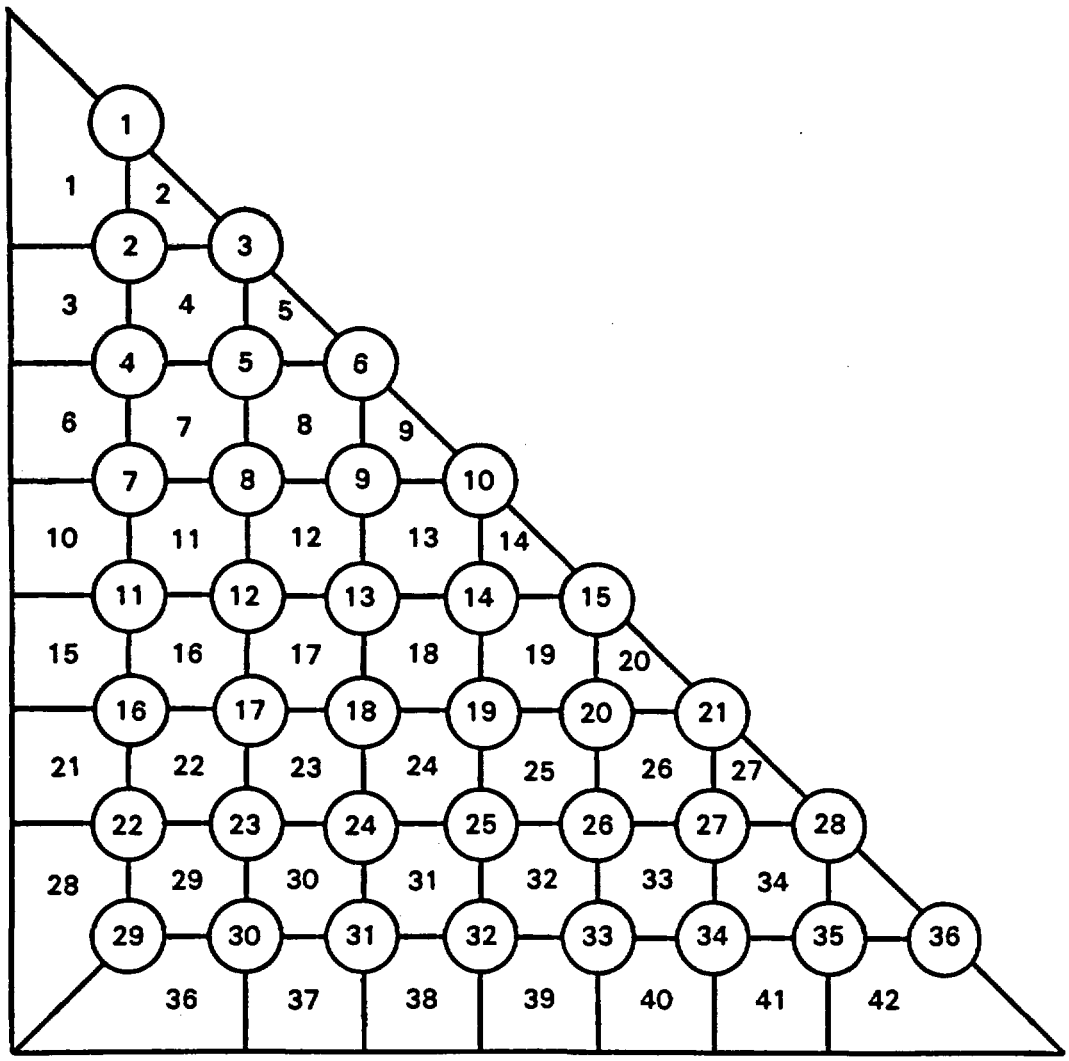


FIGURE 3.10. Rod Configuration for an 8x8 Spent Fuel Assembly with Symmetry Along the Diagonal

### 3.2.2.3 Fuel Material Properties

Fuel material properties must be entered if the detailed rod model is used, (i.e., NC > 4 on RODS.1). The fuel material types are numbered sequentially in the order they are read in on RODS.4. These index numbers are used to identify the material properties for a given rod by the value entered for N on RODS.3. NFUELT on RODS.1 specifies how many RODS.4 lines are to be read.

When using the fuel conduction model (NC>4), values are required for all the variables in RODS.4. If the fuel does not have an annular geometry, variables GEOMF and DFUELI may be left blank. When using the single node option (NC=1), only variable DROD must be specified.

Temperature-dependent fuel properties may be specified, but for fuel material type one (N=1 on RODS.3) only. The variable NTNODE in RODS.5 specifies the number of entries (RODS.6) in the temperature dependent fuel property table. The range of reference fuel temperatures, TVARY, must bound the values expected in the calculation. The fuel properties vary from rod to rod and for different axial levels but do not vary within a rod at a specific axial level. The properties are based on the calculated peak fuel temperature from the previous iteration for each rod.

Fuel rods may have different materials and internal geometries at different axial levels. The input on RODS.7 and RODS.8 may be used to describe the axial variation in fuel rods. The variations apply only to rods that have fuel material type one (N=1 on RODS.3) specified. NZONE on RODS.7 specifies the number of axial zones in a table of fuel materials versus axial distance. The variables ZEND and IZTYPE on RODS.8 are read in pairs NZONE times. ZEND is the relative axial location, expressed as a fraction of the total height, for the end of a fuel zone. The last value for ZEND should be 1.0, indicating the top of the fuel rod. The variable IZTYP is the index of material type, specified in RODS.4, in the axial fuel zone ending at ZEND.

### 3.2.3 Solid Structure Geometry

Group SLAB is used to define the geometry of the solid structures that comprise the physical storage system being analyzed. A solid structure node is termed a "slab". Solid structure nodes may be thermally connected to fluid subchannels by convection, to fuel rods by conduction and/or thermal radiation, and to other solid structure nodes by conduction and/or radiation. Solid-to-solid and solid-to-fluid thermal connections are indexed by type number, where a type is defined by the heat transfer characteristics of the connection.

### 3.2.3.1 Solid-to-Solid Thermal Connections

The solid conduction between each pair of connected slabs is modeled using a composite thermal resistance which accounts for the heat transfer area, the thermal conductivity of the slab materials, and any gap resistance or thermal radiation at the slab interface. The information used to construct these composite resistances is read in SLAB.2. A total of NKSS[SLAB.1] solid-to-solid thermal connection types are read in. Each connection type described in SLAB.2 has an identification number (IC), variables to characterize the solid conduction portion of the resistance (RDIMA, RDIMB, RSER), and optional variables to characterize the gap resistance between adjacent slabs (RPAR, EMA, EMB, ARAD).

Schematics for three different types of solid-to-solid thermal connections are shown in Figure 3.11. Figure 3.11a shows a solid-to-solid thermal connection with no gap. Figure 3.11b shows a thermal connection with conduction through a gap. Figure 3.11c shows a thermal connection with conduction and radiation through a gap.

The solid resistances, designated as $R_A$ and $R_B$, can be characterized by one of two methods. The total solid conduction resistance can be specified directly, in variable RSER on SLAB.2, expressed in units of s-ft-°F/Btu. Alternatively, the user can define the geometry of the thermal connection by entering conduction geometry factors for the two adjacent slabs in variables RDIMA and RDIMB on SLAB.2. The code will calculate the solid resistance from the geometry and the conductivity of the slab, which is identified by its material property type number (MATTYP on SLAB.3). The geometry factor $F_G$, which corresponds to variables RDIMA and RDIMB, is defined such that the thermal resistance from the center of a slab to the edge facing the adjacent slab is calculated as

$$R = F_G/k \tag{3.1}$$

where $F_G$ = geometry factor
$k$ = thermal conductivity of the material in the node (Btu/s-ft-°F).

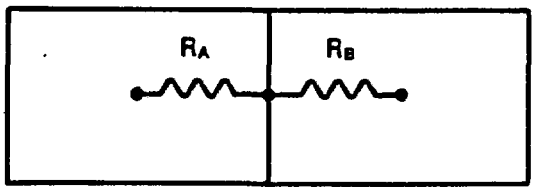


a) Solid-to-Solid Thermal Connection with no Gap

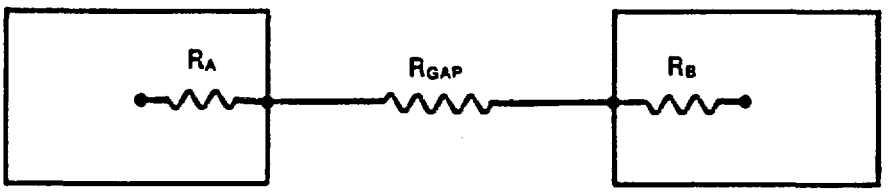


b) Solid-to-Solid Thermal Connection with Conduction Through Gap

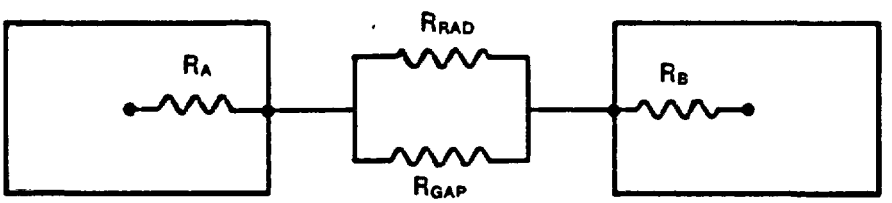


c) Solid-to-Solid Thermal Connection with Conduction and Radiation Through Gap

FIGURE 3.11. Solid-to-Solid Thermal Connection Schematics

Expressions used to calculate the geometry factor, $F_G$, are presented in Table 3.1, for different slab geometries.

TABLE 3.1. Solid Conduction Geometry Factor Definitions

| Solid Node Geometry | Figure | Geometry Factor Expression |
|---|---|---|
| Rectangle | 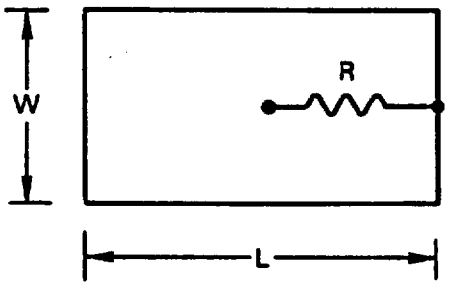  | FG = L/2W |
| Cylindrical Shell | 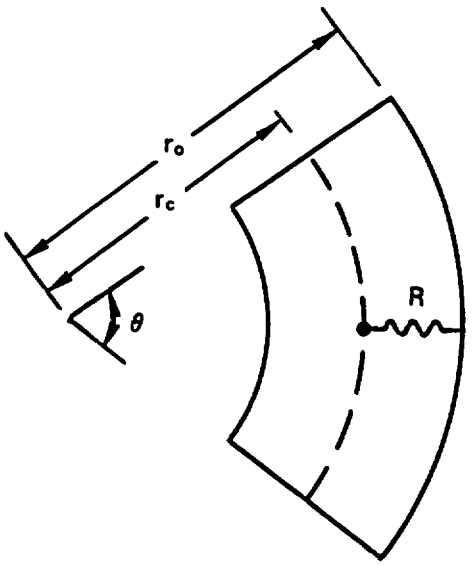  | $F_G = \frac{\ln(r_o/r_c)}{\theta}$ |

The solid conduction resistance is calculated assuming perfect contact between adjacent slabs. If there is a gap or significant contact resistance between slabs, information must be read in to characterize the gap. When only conduction or contact heat transfer occurs in the gap, as is shown in Figure 3.11b, the gap thermal resistance is specified in variable RPAR on SLAB.2, in units of s-ft-°F/Btu. When radiation heat transfer occurs through the gap, as shown in Figure 3.11c, the surface emissivities of the two slabs, variables EMA and EMB, and the radiation heat transfer area, variable ARAD,

must be specified. The gap conduction and radiation act as parallel heat transfer paths between the two surfaces.

#### 3.2.3.2 Solid Structure Node Description

The solid structure node descriptions are read in SLAB.3. One line is read for each slab in the problem for a total of NWK[SLAB.1] times. The solid structure node or "slab" input in SLAB.3 identifies the slab, specifies the material it is made of, specifies the cross sectional area for axial conduction, and describes the thermal connections with other slabs. Each slab is assigned a unique identification number, KW, which is used to describe the solid-to-solid heat transfer (SLAB.3), solid-to-fluid heat transfer (SLAB.5), and radiation heat transfer (RADG.9). The slab material type, MATTYP, must correspond to a solid material for which properties were read in PROP.3. The slab cross sectional area, WALLXC, is used to calculate axial conduction, heat generation, and transient heat storage. QSLAB and NAXK are used to specify slab heat generation.

Each slab can be thermally connected to several other slabs in the problem. By convention, a connection is identified only once by specifying it for the lower-numbered node of the pair. For example, if node 2 connects to node 7, the connection is identified on the input line for node 2. But it is <u>not</u> repeated on the input line for node 7. Only connections to higher-numbered nodes are named explicitly for a given node. The variable NSLAB is used to specify the number of thermal connections from node KW to adjacent solid nodes with index numbers greater than KW. The variables KWAL and ICON define each slab-to-slab connection. KWAL is the identification number of a slab connected to KW. ICON is the thermal connection type for the connection between KW and KWAL. ICON must correspond to one of the solid-to-solid thermal connection types defined in SLAB.2. The geometry factors RDIMA and RDIMB in SLAB.2 correspond to KW and KWAL respectively.

#### 3.2.3.3 Solid-to-Fluid Thermal Connections

The heat transfer from a slab to an adjacent fluid channel is modeled by a series resistance that includes a term for conduction from the solid structure node to the node surface that faces the channel and a term describing the

convection heat transfer from the surface to the fluid. The information used to construct these thermal connections is read in SLAB.4. A total of NKSF (SLAB.1) solid-to-fluid thermal connection types are read in. Each connection type described in SLAB.4 has an identification number (IC), a variable to describe the solid conduction part of the connection (RWAL), and a variable to describe the convection part (WID). The variable RWAL is the thermal resistance from the solid structure node to the node surface facing the channel, expressed in units of s-ft-°F/Btu. The variable WID is the perimeter of the slab that faces the channel. This is used with the Nusselt number, thermal conductivity of the fluid, and the hydraulic diameter of the channel to calculate the convection heat transfer.

The input specifying the connections between slabs and fluid channels is read on SLAB.5. Only slabs with fluid connections are identified in this input. KW is the identification number, assigned in SLAB.3, of a slab with thermal connections to fluid channels. NCHN is the number of thermal connections to adjacent channels. Variables IASSM, IKW, and ICF are read in groups where IASSM is the assembly and IKW is the local channel number of a channel connected to slab KW. ICF is the identification number of the solid-to-fluid thermal connection type for the connection between channel IKW and slab KW. ICF corresponds to the thermal connections defined in SLAB.4. This input is terminated by entering a blank line after all slabs with connections to flow channels have been identified.

### 3.2.4 Radiation Groups

Group RADG describes the radiation exchange factors used to calculate radiation heat transfer within assemblies. Radiation heat transfer is assumed to occur within individual assemblies, as defined in Group CHAN. Heat cannot be transferred directly from one assembly to another by radiation. A radiation exchange factor group consists of an array of exchange factors for every rod and slab surface in the assembly as it exchanges radiation with every other surface. The exchange factor groups are specified by type, where a type is defined by the geometry of the surfaces in the assembly and the emissivities of the surfaces. When assemblies have either different geometries or different

emissivities or both, separate radiation exchange factor groups must be specified.

3.2.4.1 Radiation Exchange Factor Groups

There are two ways the user can define a radiation exchange factor group type. For radiation groups that do not involve a rod bundle, the blackbody viewfactors and surface emissivities are specified directly in the input and the code will calculate the appropriate exchange factors for that type. For radiation groups that include a rod bundle, an auxiliary program, RADX-1, is used to generate the blackbody viewfactor array and then calculate the radiation exchange factors. The exchange factors and emissivities are read via I/O unit 10 from a file generated by RADX-1. Both options can be used in the same problem, for different assemblies.

The number of radiation exchange factor group types to be calculated directly from input of blackbody viewfactors and emissivities is specified in NRADG[RADG.1]. The input for these groups is read in RADG.2 and RADG.3, which are read sequentially, NRADG times. The input on RADG.2 includes NRAD, the radiation exchange factor group type identification number, and NSURF, the number of surfaces in the group. The number of surfaces correspond to the number of slabs that border the assembly.

The blackbody viewfactors and surface emissivities for each surface in group NRAD are read in RADG.3. Each radiation surface is arbitrarily assigned an identification number, IS, which is used in RADG.9 to correlate surface location to slab number. Each surface IS requires a radiation perimeter, AREAS, expressed in inches, and as surface emissivity, EMX. A set of blackbody viewfactors are input using variables ISX and FVW, where ISX is another radiation surface and FVW is the blackbody viewfactor from surface IS to surface ISX. NSURF pairs of ISX and FVW are read, although the pairs may be read in any order or left blank if the viewfactor is zero. If the viewfactor from surface n to surface m is entered and the viewfactor from m to n is left blank, a reciprocal viewfactor is calculated automatically in the code using the expression

$$A_n F_{nm} = A_m F_{mn} \tag{3.2}$$

where $A_n$ and $A_m$ are the surface areas and $F_{nm}$ and $F_{mn}$ are the blackbody viewfactors. The sum of blackbody viewfactors for each surface must equal 1.0. The code uses the blackbody viewfactors and emissivities to generate radiation exchange factors to model radiation heat transfer in the assembly.

The radiation exchange factor information for assemblies with rod bundles is generated using the auxiliary program RADX-1. The program RADX-1 is described in more detail in Section 6.0. This information is read from I/O unit 10 by input lines RADG.4 through RADG.8. I/O unit 10 will be read only if variable NT10 on RADG.1 is greater than zero, NT10 is the number of radiation groups to be read from I/O unit 10. A maximum of six groups can be read.

3.2.4.2 Assembly Radiation Group Information

The input in RADG.9 assigns the appropriate radiation exchange factor group type to each assembly that has radiation heat transfer. The number of assemblies with radiation groups is specified in NASSR on RADG.1. Each assembly read in RADG.9 has an identification number IASS (which corresponds to assembly number NASS defined in CHAN.4) and a radiation exchange factor group type ITYPR. A positive value for ITYPR indicates a radiation group read from I/O unit 10. The value for ITYPR must correspond to a group number MM2 on RADG.6. The maximum positive value for ITYPR is six. A negative value for ITYPR indicates a radiation group calculated from information provided in RADG.2 and RADG.3. In this case, the absolute value of ITYPR must correspond to a group type number NRAD on RADG.2.

The variables MSID and KSIDE in RADG.9 are used to correlate the radiation surface locations to slab identifications numbers for each assembly with radiation. MSID is the number of slabs with surfaces that are included in radiation exchange factor group ITYPR. For group type ITYPR with a negative value, MSID must equal NSURF in RADG.2 for that particular group. For group type ITYPR with a positive value, the value for MSID depends on the degree of symmetry assumed when the radiation exchange factors for a rod bundle are

calculated by program RADX-1. When a full rod bundle is modeled, the surrounding solid structure is divided into eight radiation exchange surfaces as shown in Figure 3.12 and MSID equals eight. When symmetry is assumed along the diagonal, the resulting half-bundle is surrounded by four radiation surfaces as shown in Figure 3.13, and MSID equals four.

KSIDE is the identification number of each slab surrounding assembly IASS, corresponding to the radiation surface locations in group ITYPR. A total of MSID values of KSIDE are read in for each assembly. For a negative value of ITYPR, a slab identification number is read for each radiation surface IS on RADG.3. For a positive value of ITYPR a slab identification number is read for each radiation surface shown on Figure 3.12 for full rod bundles or Figure 3.13 for half rod bundles.

### 3.2.5 Coarse Channel Modeling

Subchannel modeling, described in Section 3.2.1.2, affords a very detailed look at the flow and enthalpy distribution within a spent fuel assembly. Using this level of detail, the computer model of a spent fuel storage system could require a significant amount of computer capacity. The 8x8 BWR unconsolidated assembly model shown in Figure 3.14 consists of 77 subchannels and 64 rods. A 15x15 pressurized water reactor (PWR) assembly requires a model consisting of 252 subchannels and 225 rods. For consolidated fuel with a 2:1 consolidation ratio, the required number of rods and subchannels per canister more than doubles. However, the level of detail provided by detailed subchannel modeling is not always required for flow and heat transfer problems in spent fuel assemblies. Essentially the same calculational results can be obtained for these geometries using coarse channel models that require one order of magnitude fewer channel and rod nodes (Rector, Cuta, and Creer 1986).

Coarse channel models are created by using a procedure known as channel "lumping". Channel lumping proceeds from the assumption that a channel can be defined over any geometric area of the flow field where the quantities of interest--i.e., velocity, temperature, density, etc.--can be adequately represented by single average values. So, a lumped channel is, in effect, the

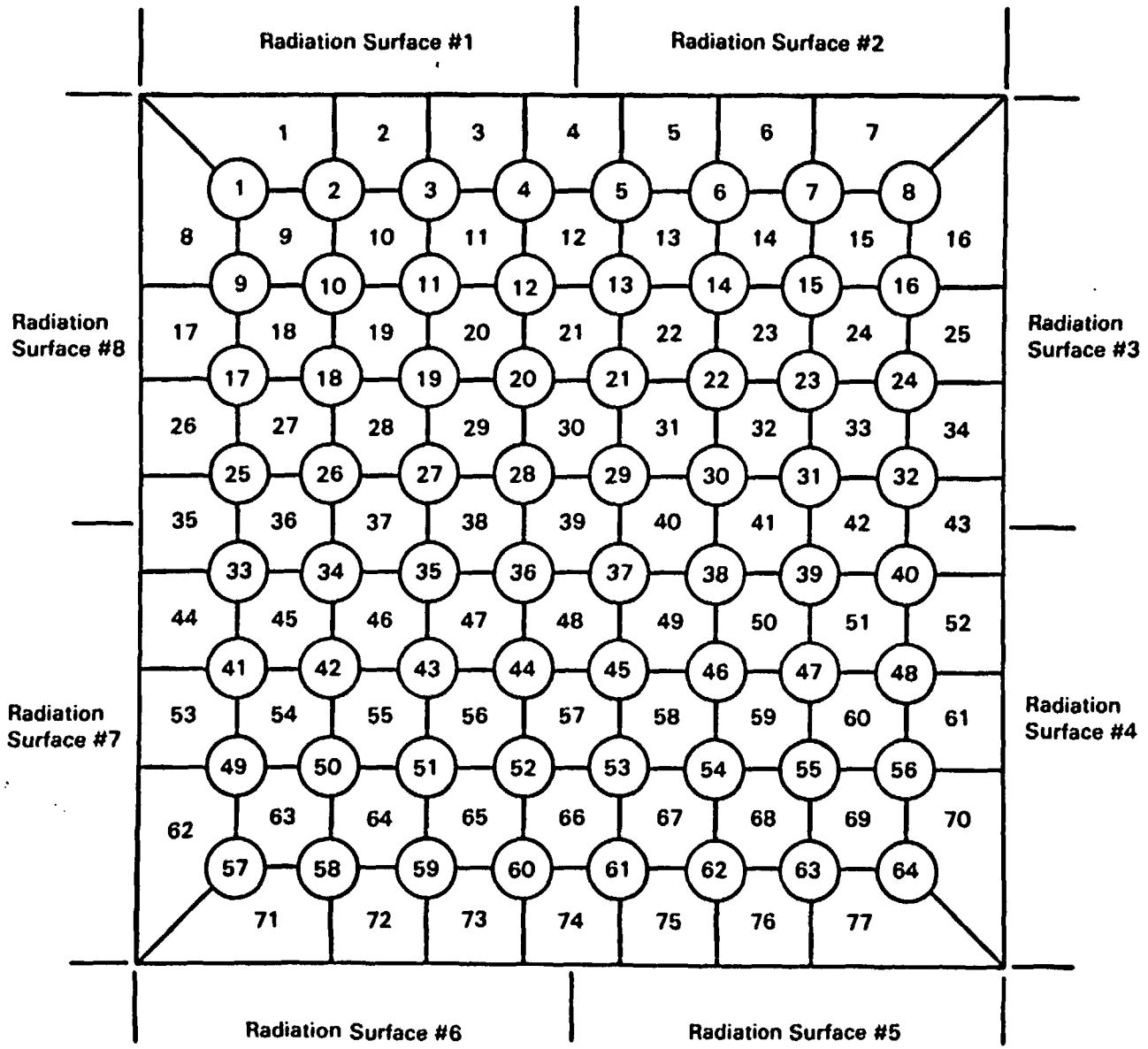


FIGURE 3.12. Radiation Surface Locations Around a Typical 8x8 BWR Assembly

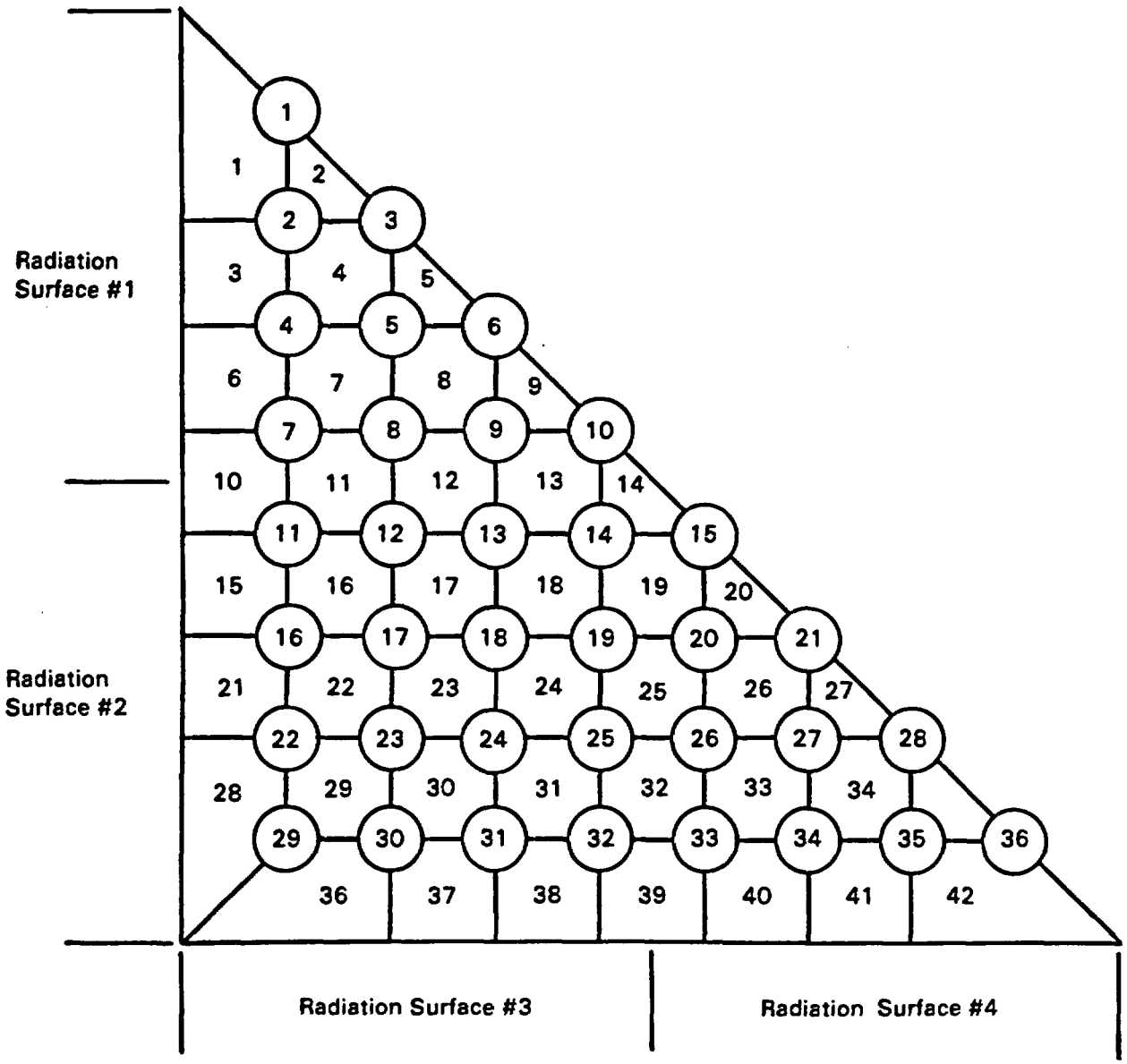


FIGURE 3.13. Radiation Surface Locations Around a Half-Symmetry 8x8 BWR Assembly

average of the individual subchannels that comprise it. The geometric characteristics of the lumped channel are relatively easy to calculate. The flow area of the lumped channel (AC[CHAN.6]) is the sum of the flow areas of the subchannels that comprise it. The same is true for the wetted (PW[CHAN.6]) and heated perimeters (PH[CHAN.6]), as shown in Figure 3.14.

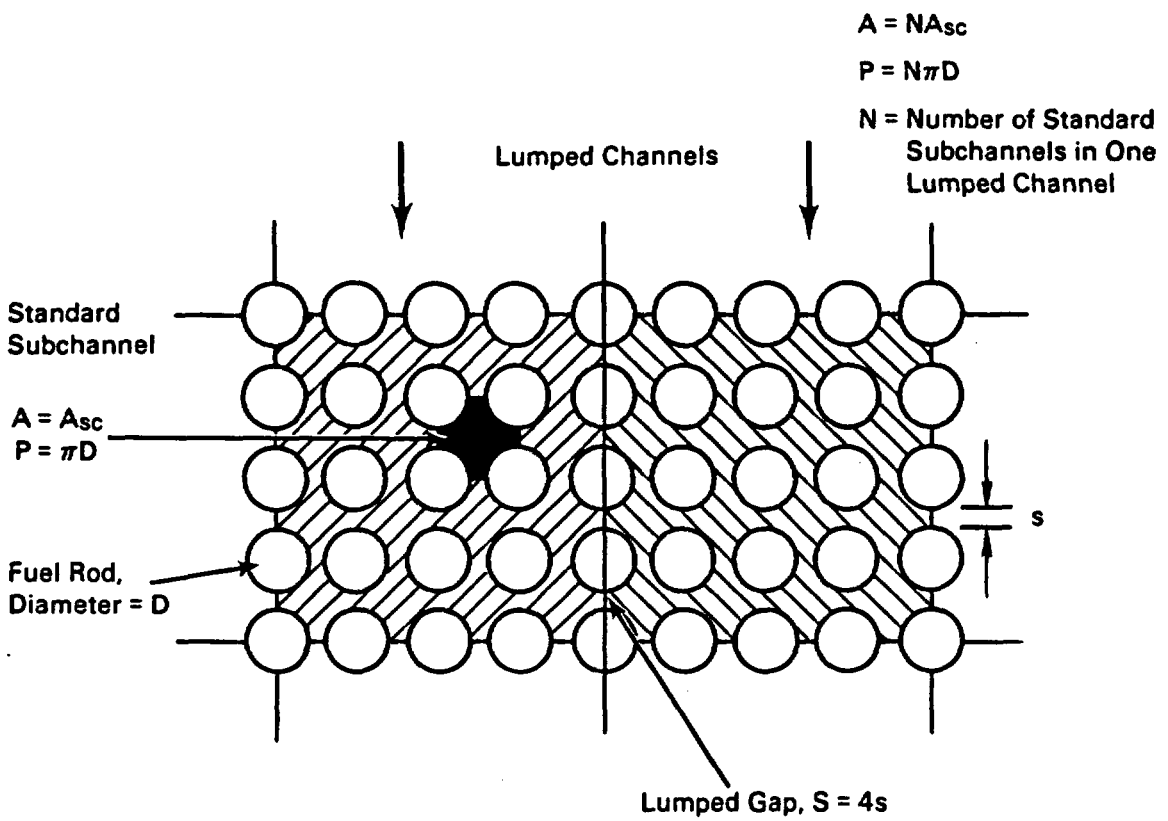


FIGURE 3.14. Lumped Channels

The input specifying the lateral flow connection between lumped channels requires special consideration. The gap width (GAPS[CHAN.6]) is the sum of the subchannel gaps through which the two lumped channels communicate. The lumped transverse control volume length (DIST[CHAN.6]) is the sum of individual transverse lengths required to travel from one channel centroid to another. For rectangular lumped channels in a square array where the individual control volume lengths are set equal to the rod-to-rod pitch, the lumped transverse length is simply the centroid-to-centroid distance.

A rod in a COBRA-SFS model is an arbitrarily defined heat transfer surface, just as channel is an arbitrarily defined control volume in the flow field. In the subchannel model, a COBRA rod models a single fuel rod. However, a COBRA rod can model any heat transfer surface or collection of surfaces. The

criterion for determining which surface or surfaces can be modeled by a single COBRA rod is the surface temperature. Surfaces at the same temperature, or nearly the same temperature, can usually be modeled with a single COBRA rod.

The number of individual rods that a lumped rod represents is determined by the sum of rod fractions (PHI[RODS.3]) connected to adjacent channels. The area for convection and radiation heat transfer and the fuel volume for heat generation are based on this sum of PHIs. The rod diameter (DR[RODS.3]) remains the same and the radial heat generation factor (RADIAL[RODS.3]) is the average of the heat generation factors for all the rods being lumped.

Radiation heat transfer is a major mode of heat transfer in spent fuel assemblies, so it is important that the geometry model take proper account of the exchange factors between heat transfer surfaces. In the detailed subchannel model, the exchange factors are calculated, rod-to-rod, rod-to-wall, and wall-to-wall, from blackbody viewfactors for quarter sections of the rod surfaces. The individual rod surface viewfactors are obtained by summing the graybody factors for the constituent quarter-section surfaces. When several individual fuel rods are modeled as a single lumped rod, the viewfactors for the individual rod surfaces are summed in much the same manner, to preserve the exchange factor relationships for all surfaces involved. If the surface temperature of the COBRA rod that models several fuel rods is essentially the same as the surface temperatures of those individual fuel rods, then the heat exchange by radiation will be satisfactorily modeled.

The primary consideration in developing a coarse channel model is to combine regions where the quantities of interest are nearly the same and to provide an adequate amount of detail to regions where significant gradients occur. The optimal coarse channel model for a spent fuel assembly may be different for forced convection and natural convection conditions. For forced convection problems, the subchannels are lumped according to fluid velocity and temperature. Subchannels with different friction factor or heat transfer correlations should be separated into different lumped channels. For natural convection problems, heat transfer in the radial direction due to conduction and radiation becomes important. Therefore, an additional consideration is to provide adequate detail to regions with significant temperature gradients.

For more information on coarse channel model development, refer to Rector, Cuta, and Creer (1986).

Before using a coarse channel model, it should be evaluated by comparing results with those obtained with a detailed rod-and-subchannel model. An evaluation of this type, performed for both unconsolidated 8x8 BWR assemblies and consolidated BWR canisters for a variety of coarse channel model is presented in Rector, Cuta, and Creer (1986).

## 3.3 CONSTITUTIVE MODELS

The energy and flow field solutions both require constitutive models to close the set of conservation equations. These constitutive models generally take the form of empirical correlations. The constitutive models for the energy solution, read in group HEAT, include convection heat transfer correlations and turbulent mixing models. The constitutive models for the flow field solution, read in group DRAG, include friction factor correlations and local pressure loss coefficients. The forms of the correlations are described and recommended values for certain types of problems are specified.

### 3.3.1 Heat Transfer Correlations

Group HEAT describes the constitutive relationships required to close the set of energy equations that are solved in the COBRA-SFS code. This group defines the heat transfer coefficient correlations for convection/conduction heat exchange between fuel rods and coolant and between solid structures and coolant. In addition, energy may be transferred between adjacent fluid channels by specifying single-phase turbulent mixing and fluid conduction.

#### 3.3.1.1 Convection Heat Transfer Coefficients

The convection heat transfer between fuel rod or solid structure surfaces and the fluid is described using a heat transfer coefficient, H. The form of each heat transfer coefficient may vary for different flow regimes. Therefore, each convection heat transfer correlation is read in HEAT.2 with a turbulent and a laminar formulation,

$$H_T = (k/D)\ [AH1(I)Re^{AH2(I)}Pr^{AH3(I)} + AH4(I)]$$

$$H_L = (k/D)\ [AHL1(I)Re^{AHL2(I)}Pr^{AHL3(I)} + AHL4(I)] \tag{3.3}$$

where Re = Reynolds number
Pr = Prandtl number
k = fluid thermal conductivity
D = hydraulic diameter

The code evaluates the heat transfer coefficient as the maximum of the two; $H = \max(H_T, H_L)$. If a problem is known to have flow only in the turbulent regime, coefficients are needed only for $H_T$, and those for $H_L$ can be left blank. Conversely, for a problem with laminar flow only, $H_T$ can be left blank, with values entered for $H_L$ only. A total of NHEAT[HEAT.1] correlation sets are read in. The correlations are identified by type number, which corresponds to the values specified for NFLMC on CHAN.5.

For spent fuel storage system problems, the flow is generally in the laminar flow regime. Analytical expressions for the Nusselt number exist for different channel shapes and different thermal boundary conditions, such as constant heat flux or constant temperature. Unfortunately, such conditions do not exist in an actual cask. Therefore, recommended values are provided based on the experience of modeling several spent fuel storage casks using the COBRA-SFS code. This experience is summarized in the Validation Report (Lombardo et al. 1986).

For storage systems backfilled with gaseous media operating in either the vertical or horizontal orientation, the heat transfer from the rods and solid structure to the fluid is prescribed using a correlation of the form Nu = 3.66 (Kays and Crawford 1980). This formulation is an exact solution of the energy equation for a circular tube with fully developed velocity and temperature profiles and a constant temperature boundary.

Storage systems that have been evacuated still have a residual amount of low-pressure gas remaining. Even at very low pressures, this fluid is still

capable of a significant amount of conduction heat transfer. Therefore, the surface heat transfer is represented by a correlation of the form Nu = 1.0, indicating conduction only. When this value is used, the rod energy equations, which are written in terms of fluid temperature, are loosely coupled to the fluid energy equation. Therefore, the rod solution damping factor, ACCROD[CALC.2], may need to be reduced.

#### 3.3.1.2 Turbulent Mixing

When turbulence occurs in a spent fuel storage system, the fluid in adjacent subchannels is mixed, resulting in the transfer of quantities such as fluid energy and axial momentum from one subchannel to another. The amount of transfer is modeled using a turbulent exchange crossflow, $W_T'$, which represents an equal mass exchange through each lateral flow connection. The form of the expression used to calculate the turbulent exchange crossflow is specified by variable NSCBC. The options include the following:

NSCBC = 0) no turbulent mixing (default)

$$
\begin{aligned}
&1)\ W_T' = \text{ABETA} * (S_K\bar{G}) \\
&2)\ W_T' = \text{ABETA} * \text{Re} ** \text{BBETA} * (S_K\bar{G}) \\
&3)\ W_T' = \text{ABETA} * \text{Re} ** \text{BBETA} * (\overline{DG}) \\
&4)\ W_T' = \text{ABETA} * \text{Re} ** \text{BBETA} * (S_K/\ell_K)\ (\overline{DG})
\end{aligned}
\tag{3.4}
$$

where $W_T'$ = turbulent crossflow

Re = Reynolds number (based on axial velocity)

$\bar{G}$ = average axial mass flux of the two channels connected by lateral flow connection K

$S_K$ = lateral flow connection width

$\bar{D}$ = average hydraulic diameter of the two channels connected by lateral flow connection K

$\ell_k$ = transverse momentum control volume length for flow connection K.

The variables ABETA and BBETA are specified in HEAT.3 for each assembly type. For most spent fuel storage systems problems, the turbulent exchange is assumed negligible and NSCBC is set equal to zero.

The turbulent exchange crossflow mixes both fluid enthalpy and axial momentum. The variable FTM, read in HEAT.4, is a correction factor between 0.0 and 1.0, applied to the momentum mixing term to account for the imperfect analogy between turbulent transport of thermal energy and momentum. The default value is zero which assumes that turbulent mixing transports enthalpy only, and not axial momentum.

#### 3.3.1.3 Fluid Conduction

The transfer of heat between adjacent channels by fluid conduction is important in many spent fuel storage problems. The variable NFCON in HEAT.1 must equal one if fluid conduction is to be modeled. Conduction heat transfer between adjacent channels is calculated based on a conduction path defined by the length, DIST[CHAN.7], and width, GAPS[CHAN.7], of the lateral control volume. The variable GK on HEAT.5 can be used to modify the conduction length for the lateral connections in a given assembly. The conduction length is defined as

$$\ell_c = \ell/GK \tag{3.5}$$

where $\ell$ is the lateral control volume length DIST[CHAN.7]. When GK is zero, there is no fluid conduction in the assembly. A value of GK is read for each assembly if NFCON equals 1. The recommended value for GK is 1.0.

### 3.3.2 Friction Factors and Loss Coefficient

Group DRAG describes the axial pressure losses due to wall friction and local obstructions in the flow field. The wall friction losses are described using friction factor correlations. The flow obstructions are described using pressure loss coefficients and local axial flow blockages. In addition, an optional network model is provided to model pressure losses that occur outside the subchannel model region of the problem.

### 3.3.2.1 Friction Factor Correlations

Wall friction losses are described using friction factors; therefore, the axial pressure gradient is given by

$$\frac{dP}{dz} = \frac{f|m|m}{2g_c D_h \rho A} \tag{3.6}$$

where f = friction factor
m = mass flow rate (lbm/s)
$\rho$ = density (lbm/ft$^3$)
$D_h$ = hydraulic diameter (ft)
A = channel area (ft$^2$)
$g_c$ = 32.2 (lbm-ft)/(lbf-s$^2$).

The friction factor, f, is determined from the Blaisus relation

$$f = aRe^b + c \tag{3.7}$$

where Re is the channel Reynold's number and a, b, and c are user-specified constants. The form of each friction factor expression may vary for different flow regimes. Therefore, each correlation is read in DRAG.2 with a turbulent and a laminar formulation,

$$f_T = AA(I)Re^{BB(I)} + CC(I)Re^{DD(I)} + EE(I) \tag{3.8}$$

$$f_L = AAL(I)Re^{BBL(I)} + CCL(I)$$

The code evaluates the friction factor as the maximum of the turbulent and laminar formulations;

$$f = \max\ (f_T,\ f_L) \tag{3.9}$$

For problems with turbulent flow only, $f_L$ can be specified as zero. Similarly, for problems with laminar flow only, $f_T$ can be specified as zero. However, the user should be aware that some laminar friction factor correlations can

produce unreasonably low friction factors at higher Reynolds numbers. The input for the turbulent correlation can be used to define a lower limit on f to provide physically meaningful results at higher flow rates. A total of NFRICT[DRAG.1] correlation sets are read in. The correlations are identified by type number, which correspond to the values specified for MDFLT(NASS) on CHAN.5 and N on CHAN.6.

Flows within a spent fuel storage system are typically in the laminar regime. For assemblies that contain rod bundles, the friction factor expression may be obtained from an analytical solution for fully developed laminar flow along cylinders arranged in square or triangular arrays (Sparrow and Loeffler 1959). The friction factor takes the form

$$f_L = AAL(I)\ Re^{-1.0} \tag{3.10}$$

where the values for AAL are shown as a function of pitch-to-diameter ratio in Figure 3.15 for square arrays and Figure 3.16 for triangular arrays. For BWR and PWR spent fuel assemblies, the laminar friction factor is approximately

$$f_L = 100/Re \tag{3.11}$$

Analytical solutions for laminar friction factor expressions are available for many other channel shapes (Kays and Crawford 1980).

3.3.2.2 Local Loss Coefficients

Hydraulic losses associated with grid spacers or other structures that causes irrecoverable axial pressure losses in a channel are modeled using pressure loss coefficients. The pressure loss is calculated as

$$\Delta P = C_D \frac{|m|m}{2\rho g_c A^2} \tag{3.12}$$

where

$C_D$ = loss coefficient

$m$ = upstream mass flow rate (lbm/s).

Local loss coefficients are specified by assembly type. NOLC in DRAG.1 is the number of assembly types for which loss coefficients are to be specified. The loss coefficient information for each assembly type is read in DRAG.3 and DRAG.4. Each assembly type with loss coefficients has an identification number NB, which corresponds to ITYPA in CHAN.4. The loss coefficients are read in using channel sets where a set is defined as a group of sequentially numbered channels that all have the same loss coefficients at the same axial locations. The input is set up so that the information from a previous channel set may be overwritten by a following set. A total of NLCOEF[DRAG.3] channel sets are read for each assembly type.

DRAG.4 contains information for each channel set specified in NLCOEF[DRAG.3]. The channel set is defined by the starting local channel number, ILCS[DRAG.4], and the ending local channel number, ILCE[DRAG.4]. The

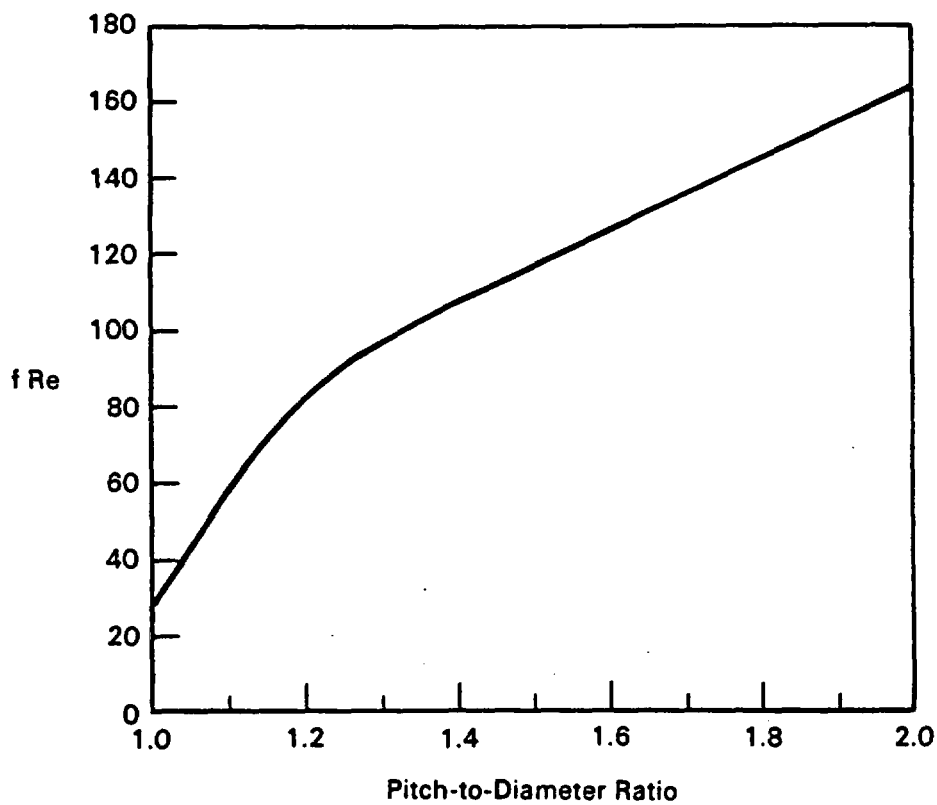


FIGURE 3.15. Friction Factor Correlation for Rods in a Square Array as a Function of Pitch-to-Diameter Ratio

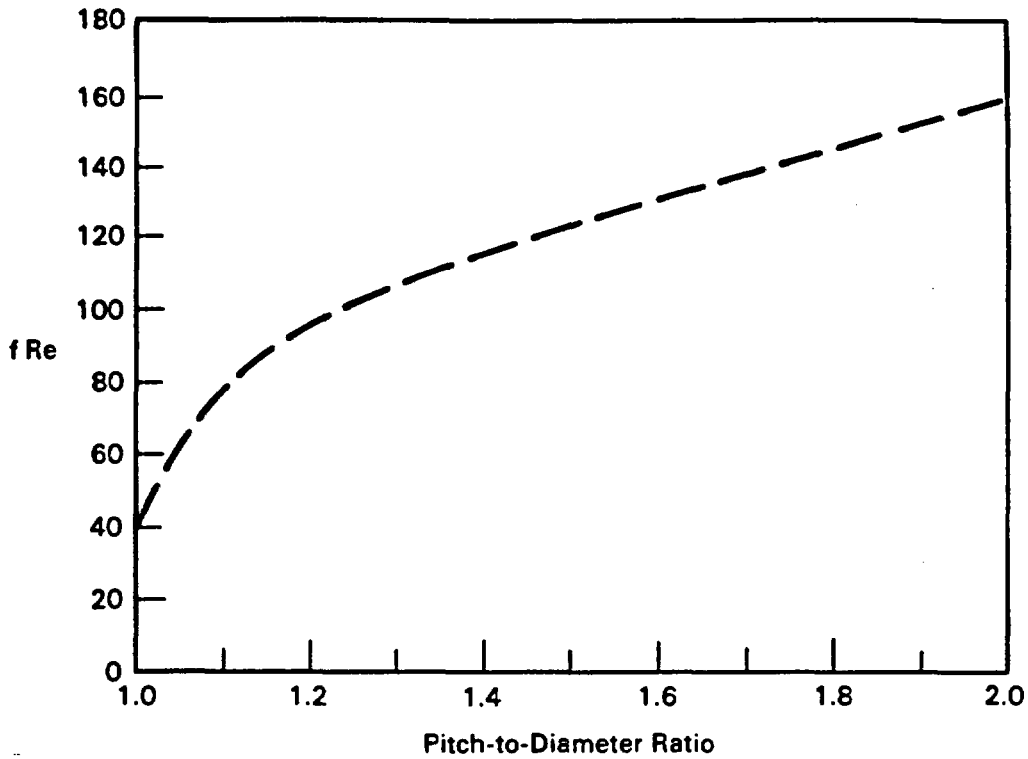


FIGURE 3.16. Friction Factor Correlation for Rods in a Triangular Array as a Function of Pitch-to-Diameter Ratio

loss coefficients for each set are specified at NLEV axial locations. Each location is identified by FACTOR, which is the relative height (X/L) as compared to the total axial length of the channel region, Z[CHAN.2]. At each axial location, the constant loss coefficient is read in variable CD. Variables FACTOR and CD are read in pairs, NLEV times.

The loss coefficients are usually expressed as constants (as CD in DRAG.4), but the user has the option of varying loss coefficients as a function of Reynolds number. The number of loss coefficients versus Reynolds number forcing functions to be read is specified in NLCFF[DRAG.1]. The Reynolds number table, with NLCFP[DRAG.1] values, is read in DRAG.5. The loss coefficient factors, which correspond to each Reynolds number are read in DRAG.6 for each forcing function profile. These profiles are referenced in LCFF[DRAG.3] for loss coefficients, and NINFF[DRAG.7] and NOUTFF[DRAG.7] for the network model.

### 3.3.2.3 Network Model

For many flow problems it may be necessary to model the pressure losses above and below the channel region described in group CHAN. The pressure loss network model, which is specified by NETWK=1 on DRAG.1, is read in DRAG.7 through DRAG.9. The network may only be used with a pressure drop boundary condition (ITDP[OPER.1]>0). Using this option, a total system pressure drop is specified and the subchannel flow rates are adjusted so that the pressure drop through each possible flow path matches the specified pressure drop. Figure 3.17 shows a schematic description of the network model for a three-assembly problem with a downcomer channel. In this particular example, assemblies 1 and 2 are assemblies connected to a common plenum and assembly 3 is an assembly connected to a separate plenum. The downcomer channel may represent an assembly with negative flow. The conservation equations are solved only for the subchannel model region as noted in Figure 3.14. This noded length normally represents the rod bundle where flow resistance is determined by friction factors and loss coefficients. The gravitational head is also accounted for in this region. Along the rest of the flow paths, a reduced momentum equation is solved, which takes into account only the flow resistance due to friction, form drag, and the static loss. No inertia terms are included. It is assumed that the transport time through the network model is zero.

The information describing the network model is read in DRAG.7 through DRAG.9. The assembly information is read in DRAG.7 for each assembly. Each assembly is assigned a group number, inlet loss parameters, and optional loss coefficient forcing functions. A loss coefficient for the total flow in all assemblies is specified on DRAG.8. Loss parameters for individual groups of assemblies are specified on DRAG.9 for NOGRP[DRAG.1] groups of assemblies.

In the example described by Figure 3.17, the resistances marked $R_{Ain}$ and $R_{Aout}$ read in DRAG.7 are the flow resistances associated with the assembly inlet and the outlet, respectively. These loss coefficients can be made dependent on the Reynolds number by specifying NINFF and NOUTFF in DRAG.7. A gravitational pressure drop can also be modeled by supplying head lengths at the inlet (HAIN) and outlet (HAOUT) as noted in Figure 3.17. The assembly

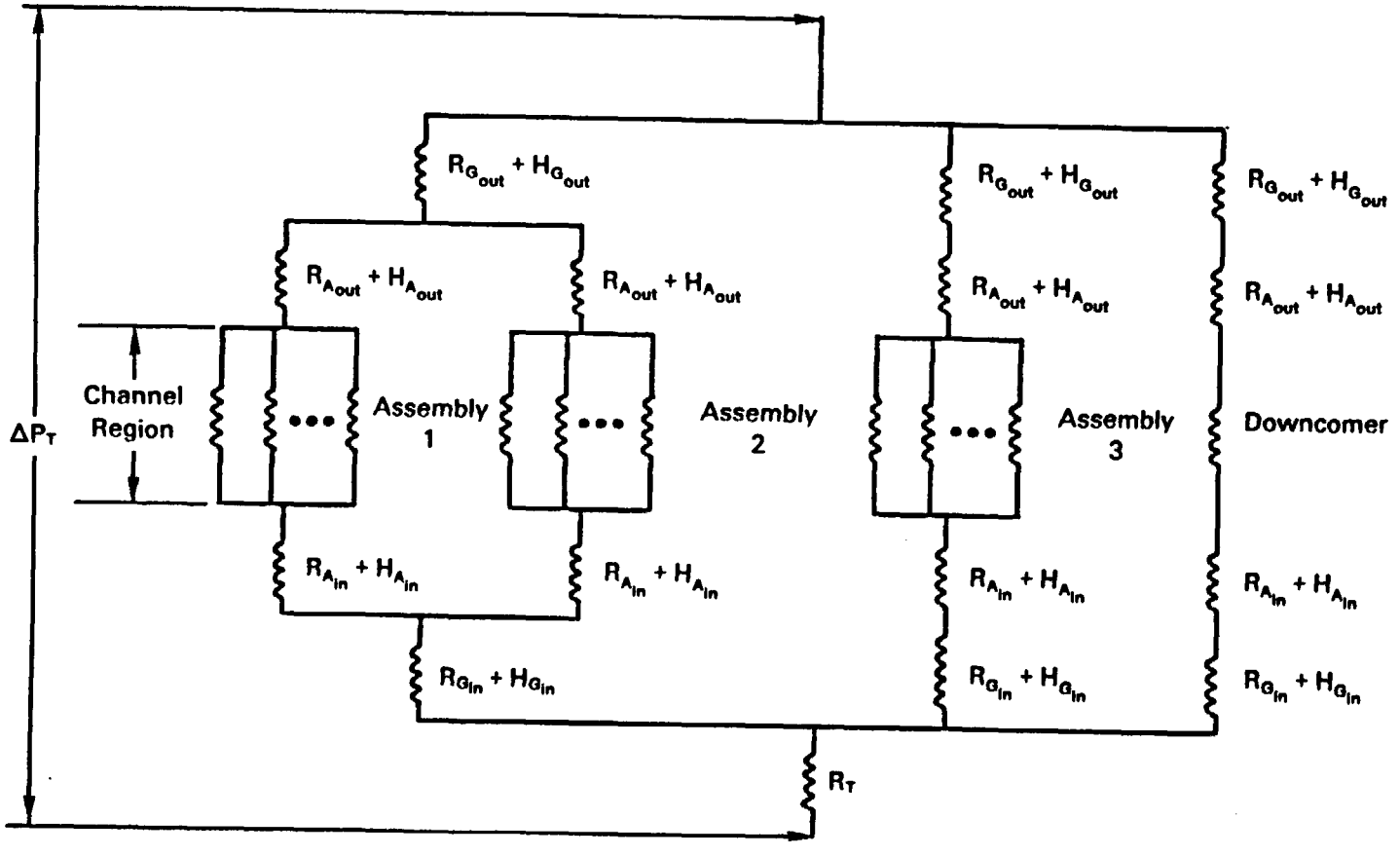


FIGURE 3.17. Schematic Description of the Network Model for Pressure Drop Through a Storage System

inlet gravitational head loss is calculated using the inlet temperature for density calculations. The outlet gravitational head loss is arrived at using the mixed mean assembly outlet temperature.

The group dynamic loss coefficients, $R_{Gin}$ and $R_{Gout}$, represent the flow resistance from a common plenum to the assembly group plenums or to the downcomer channel. The group dynamic loss coefficients are assumed to be independent of the Reynolds number. Here too, gravitational losses may be modeled by supplying the head lengths. Finally, $R_T$, read in DRAG.8, represents the dynamic loss coefficient for flow from the inlet to the common plenum.

The effective loss coefficients for assemblies, assembly groups, and the entire system are defined as:

$$R = \frac{\Delta P g_c}{m^2} \tag{3.13}$$

where $\Delta P$ has units $lbf/ft^2$, and m is in lbm/s, giving R the units of 1/ft-lbm. For each assembly that resistance coefficient $R_A$ is dependent on the Reynolds number, it is necessary to supply a wetted perimeter so the Reynolds number may be calculated from the flow rate. The wetted perimeter need not have any physical significance but should be chosen so that the correct loss is obtained for a given flow rate when using the specified resistance versus Reynolds number curve.

3.3.2.4 Local Blockages

In some channels there may be a total blockage of flow at certain axial locations. Blockage information is read in DRAG.10 and DRAG.11 only if the number of axial locations with blocked channels, read as NBLOCK on DRAG.1, is greater than zero. Each axial level where blockage occurs is specified as NBLOCKA in DRAG.10 and NBLOCKC is the number of channels blocked. The assembly and channel numbers are read in pairs in DRAG.11.

## 3.4 BOUNDARY CONDITIONS

Boundary conditions are required to solve both the energy and flow field sets of equations. The thermal boundary conditions, which are applied to the side of the channel model region and to the upper and lower plenums, are specified in group BDRY and are discussed in Section 3.4.1. The flow boundary conditions and transient forcing functions are specified in group OPER and discussed in Section 3.4.2.

### 3.4.1 Thermal Boundary Conditions

Group BDRY defines the thermal interface between the system being modeled and the environment. A typical COBRA-SFS model is divided into a maximum of three regions: an optional upper plenum, a channel region, and an optional lower plenum. Each region is connected to the environment using thermal boundary connection types, which are described in Section 3.4.1.1. Heat is transferred from the side of the channel region through a series of radial boundary regions, each of which can use a different boundary connection type to define the heat transfer. These side thermal boundary conditions are described in Section 3.4.1.2. The plenum regions model the fluid mixing and heat transfer to boundary temperatures in the regions above and below the channel region. The plenum models are usually employed when modeling a fully-enclosed system that has internal recirculation flow paths. The plenum models are described in Section 3.4.1.3.

#### 3.4.1.1 Thermal Boundary Connections

The heat transfer from a boundary surface may consist of a combination of nonlinear heat transfer modes such as natural convection or thermal radiation. This heat transfer is modeled using thermal boundary connection types, which are read in BDRY.2. These connection types are referenced in the side boundary model [BDRY.5] and plenum models [BDRY.7]. A total of NBTYP[BDRY.1] connections are read in.

The thermal boundary connection types are structured to be as general as possible. They are formulated assuming that the heat flux in the boundary region can be expressed as a function of the temperature difference between the boundary nodes. The general form is

$$q''_{boundary} = C_1 \left[C_2(T_i - T_{i+1})\right]^{C_3}(T_i - T_{i+1}) + \sigma \left(\frac{1}{\epsilon_i} + \frac{1}{\epsilon_{i+1}} - 1\right)^{-1}(T_i^4 - T_{i+1}^4) \tag{3.14}$$

where

$C_n$ = user-defined constants

$\sigma$ = Stefan-Boltzmann constant, 0.1714(E8) Btu/h-ft$^2$°R$^4$

$\epsilon_i$, $\epsilon_{i+1}$ = surface emissivities of boundary nodes i and i+1, respectively

$T_i$, $T_{i+1}$ = temperature of node i and i+1, respectively.

For a boundary region where heat transfer is by conduction only, the heat flux is

$$q'' = \frac{k}{L}(T_i - T_{i+1}) \tag{3.15}$$

where k = thermal conductivity (Btu/h-ft-°F)

L = distance between nodes i and i+1 (ft)

The thermal boundary connection defined by Equation (3.14) for this situation reduces to

$$C_1 = \frac{k}{L};\ C_2 = 0.0;\ C_3 = 0.0.$$

If the heat transfer mode through a boundary region is natural convection, the heat transfer is characterized by the Nusselt number, Nu, which generally takes the form

$$Nu = HL/k = C(PrGr)^n \tag{3.16}$$

where L = characteristic length

Pr = Prandtl number

Gr = Grashof number.

The Grashof number is defined as

$$Gr = \frac{L^3 \rho^2 \beta g}{\mu^2} \Delta T \tag{3.17}$$

where $\rho$ = density

$\beta$ = coefficient of thermal expansion

g = acceleration due to gravity

$\mu$ = fluid viscosity.

Therefore, the heat flux due to natural convection can be expressed using Equation (3.14) by specifying the constants

$$C_1 = \frac{Ck}{L};\ C_2 = Pr\ \frac{L^3 \rho^2 \beta g}{\mu^2};\ C_3 = n \tag{3.18}$$

The fluid properties used in calculating the coefficients are evaluated at a temperature calculated from the average of the temperatures at nodes i and i+1.

A recommended set of natural convection heat transfer expressions for different geometries is presented in Table 3.2. The Nusselt number for a vertical plane or cylinder such as the side of a spent fuel storage cask in a vertical orientation, or the ends of a cask in a horizontal orientation can be calculated using the expression

$$Nu = 0.13\ (PrGr)^{0.33} \tag{3.19}$$

where the characteristic length of the geometry, L, is the height of the surface.

The Nusselt number for a horizontal cylinder, such as a spent fuel storage cask in a horizontal orientation, can be calculated using the expression

$$Nu = 0.126\ (PrGr)^{0.33} \tag{3.20}$$

where the characteristic length, L, is the diameter of the cylinder.

TABLE 3.2. Natural Convection Heat Transfer Expressions

| Geometry | Expression | Range |
|---|---|---|
| Vertical plane or cylinder | $Nu = 0.13\ (PrGr)^{0.33}$ | $10^9 > PrGr < 10^{12}$ |
| Horizontal cylinder | $Nu = 0.126\ (PrGr)^{0.33}$ | $10^9 < PrGr < 10^{12}$ |
| Horizontal plate facing upward when heated or downward when cooled | $Nu = 0.14\ (PrGr)^{0.33}$ | $2x10^7 < PrGr < 10^{10}$ |
| Vertical annular region | $Nu = 0.22A^{-1/4}\ (\frac{Pr}{0.2+Pr}\ PrGr)^{0.28}$ | -- |

The Nusselt number for a horizontal plate facing upward when heated or downward when cooled, such as the ends of a spent fuel storage cask in a vertical orientation, can be calculated using the expression

$$Nu = 0.14\ (PrGr)^{0.33} \tag{3.21}$$

where the characteristic length, L, can be either the diameter or the largest dimension of a rectangular area. This expression is good for the range $2*10^7 < PrGr < 10^{10}$.

The natural convection heat transfer across a vertical annular region filled with a convecting fluid, such as a spent fuel storage cask with a liquid neutron shield, can be calculated using the Nusselt number expression

$$Nu = 0.22A^{-1/4}\ (\frac{Pr}{0.2+Pr}\ PrGr)^{0.28} \tag{3.22}$$

where A is the annulus aspect ratio, L/D (Catton 1978).

3.4.1.2 Side Thermal Boundary Condition

Heat transfer radially from the outside surface of a storage system is modeled using a series of thermal boundary connection types (described in Section 3.4.1.1) between each outside surface solid structure node and a specified boundary axial temperature profile. When no side thermal boundary

condition is specified, it is assumed that the outside radial surface of the problem is adiabatic.

The boundary axial temperature profiles are specified in BDRY.3. Each profile consists of a table of relative axial locations, specified as ZENDT, and boundary temperatures, BT, corresponding to location ZENDT. A total of NZONET[BDRY.3] pairs of ZENDT and BT are read for each profile. A boundary temperature can be specified as uniform by entering a two-point table, with the same temperature at relative axial locations 0.0 and 1.0. A total of NBTEMP[BDRY.1] boundary temperature profiles must be entered.

The thermal boundary connections between each outside surface solid structure node and a boundary axial temperature profile are specified in BDRY.4 and BDRY.5. For each solid structure node connected to the boundary IWSID[BDRY.4], a one-dimensional series of NHSID[BDRY.4] boundary regions is specified, with each region assigned a thermal boundary connection type. In addition, each surface node IWSID is assigned a boundary temperature profile NBTTYP[BDRY.4], which corresponds to the profiles read in BDRY.3. A total of NBSID[BDRY.1] sets of BDRY.4 and BDRY.5 input are read in, one for each surface solid structure node.

In most cases, only one region will be required to define the heat transfer from the edge of the system to the environment, (e.g., from the outer surface of the cask to the ambient air temperature). In some cases, however, there may be regions within the cask that require a natural convection boundary connection, (e.g., heat transfer across an annular region filled with a liquid neutron shield). In this case, the number of boundary regions would be expanded to include all regions (including those representing internal natural convection, solid conduction, external natural convection along with thermal radiation, etc.) extending from the outside row of solid structure nodes.

The information for each boundary region connected to solid structure node IWSID is specified in BDRY.5. The first region connects to surface node IWSID, the rest of the regions are connected in series, each by its appropriate boundary connection type, up to the NHSIDth region, which connects to the

boundary temperature. The heat transfer perimeter for each region is obtained by multiplying the factor SPER[BDRY.5] by the base perimeters AWSID[BDRY.4].

The thermal boundary connection types for each region may vary as a function of axial location. A table of NZONEB[BDRY.5] axial zones is read with ZENDB[BDRY.5] as the relative axial location (X/L) of the end of each zone. A boundary thermal connection type NBCTYP[BDRY.5], which corresponds to the connection types read in BDRY.2, is assigned to each axial zone defined by ZENDB. For a uniform boundary connection, NZONEB is set equal to 1 and ZENDB is set equal to 1.0.

#### 3.4.1.3 Plenum Model

A plenum is defined as a common fluid region connecting to all channels in the problem. It is assumed that all flow entering the plenum is instantaneously and perfectly mixed. When flow reversal occurs, the flow re-entering the subchannel model region has a mixed mean enthalpy. Problems with no flow reversal do not require a plenum region model.

It is assumed that each plenum has an adiabatic boundary and does not lose heat to the environment unless otherwise specified. If heat loss does occur, the input in BDRY.6 through BDRY.8 defines the heat transfer from the fluid in each plenum to boundary temperatures. The plenum heat transfer input is called by setting NPR[BDRY.1] equal to one--indicating heat loss either from the upper or lower plenum; or equal to two--indicating heat loss from both plenums. When NPR is set equal to zero, it is assumed that there is no heat transfer from the plenum fluid and BDRY.6 through BDRY.8 are not read.

The heat loss from a plenum is represented by two separate one-dimensional heat transfer paths, one in the radial direction and one in the axial direction. Each heat transfer path is defined using a series of plenum boundary regions that are modeled using the thermal boundary connection types described in Section 3.4.1.1. The heat transfer paths are similar to those used in the side thermal boundary condition.

The basic input for each plenum is provided in BDRY.6. Each heat transfer path is assigned a base heat transfer perimeter (AWPS for radial, AWPAX for axial), the number of plenum boundary regions (NPSID for radial, NPAX for

axial), a constant boundary temperature (TAMBP), and optional boundary heat flux (QPSRC). When the number of radial plenum boundary regions, NPSID[BDRY.6], is greater than zero, line BDRY.7 is read for each radial region. When the number of axial plenum boundary regions, NPAX[BDRY.6], is greater than zero, line BDRY.8 is read for each axial region.

The input in lines BDRY.7 and BDRY.8, which have identical formats, defines each plenum region. The heat transfer through each region is defined by the thermal connection types NPTYP[BDRY.7,8], and the heat transfer area. The area is obtained by multiplying the factor SPERP[BDRY.7,8] by the base area AWPS[BDRY.6] or AWPAX[BDRY.6].

Axial conduction between the solid structure nodes in the top or bottom axial level and the plenum regions can also be modeled. The variable NPWN on BDRY.7 and BDRY.8 is the number of solid structure nodes connected to either the upper or lower plenum region. Each connection is assigned a solid structure node identification number (IPINTP), a material type for the connection (MATTYPP), a heat transfer area (AREAXP), and a heat transfer length (DXPLEN). If AREAXCP is not specified, the default is the cross-sectional area of node IPINTP, as specified in WALLXC[SLAB.3].

### 3.4.2 Operating Conditions and Transient Forcing Functions

Flow boundary conditions must be specified before the momentum and continuity equations in the COBRA-SFS code can be solved. In addition, other operating conditions, such as flow inlet temperature and fuel rod heat generation distribution, must be provided. Group OPER defines the initial and operating conditions of the spent fuel storage system, and defines the transient forcing functions if the operating conditions vary as a function of time. The input specifying operating conditions is described in Section 3.4.2.1. The input specifying the transient forcing functions is described in Section 3.4.2.2.

#### 3.4.2.1 Operating Conditions

The basic operating conditions of the spent fuel storage system, which are specified in OPER.2, include the steady-state system pressure, inlet flow

conditions, average heat generation, and nominal pressure drop or total flow boundary conditions on the system.

When the operating conditions are nonuniform with respect to assembly or channel location, input lines OPER.3 through OPER.8 are used to specify the distribution. The system pressure, PEXIT[OPER.2], is used together with the fluid saturation pressure, PLIQ[PROP.2], to calculate a saturation temperature limit for the problem. When saturation condition is not a concern, as in the case of a gas, PEXIT is left blank.

The variable HIN[OPER.2] represents the average inlet enthalpy or temperature, depending on the value specified for IHH[OPER.1]. When IHH=0, the variable HIN is the average inlet enthalpy. When IHH=1, the variable HIN is the average inlet temperature. When IHH is greater than one, the inlet enthalpy (IHH=2) or inlet temperature (IHH=3) is read in OPER.3 for each channel in the problem. When a problem does not have downward flow into the lower plenum, the inlet flow enthalpy or temperature remains constant. When flow reversal does occur, a value for HIN is required to begin the calculation but a new inlet enthalpy or temperature is then calculated based on the flows entering the lower plenum.

The flow boundary condition, which is specified by ITDP[OPER.1], has several different options available, including:

- A specified flow boundary condition (ITDP=0)--The average inlet mass flux is specified as GIN[OPER.2]. If a nonuniform inlet mass flux is desired, then the flow distribution option is specified in IG[OPER.1]. When IG=0, GIN[OPER.2] is the uniform mass flux. When IG=1, GIN is the average inlet mass flux, but the flow is split to give an equal pressure drop across the first axial node. When IG=2, GIN is the average inlet mass flux, but the flows for each assembly are determined by user-specified flow fractions in OPER.4. When IG=3, the channel flows are determined by user-specified flow fractions in OPER.6.
- Uniform pressure drop boundary condition (ITDP=1)--The total system pressure drop is specified as DPS[OPER.2]. The flow fields are adjusted to give a uniform pressure drop across the problem. A similar option

(ITDP=2) requires a uniform inlet mass flux as well as pressure drop. (This option should only be used with crossflows ISCHEME[CALC.1]=0.) When nonuniform pressure drops are desired, NDPA is set equal to one and pressure drops for each assembly are read in OPER.8. Note that when the network model is used (NETWK[DRAG.1]=1), the pressure DPS[OPER.2] is across the entire pressure network.

- Total flow boundary condition (ITDP=3)--A uniform pressure drop is calculated to give the total flow rate specified in FTOTAL[OPER.2].

When modeling a spent fuel storage cask, specify the total flow boundary condition (ITDP=3) and set the total flow FTOTAL[OPER.2] equal to zero. In all cases, an inlet mass flux, GIN, is required to start the problem. If no value is specified for a pressure drop or total flow problem (ITDP > 0), a default value will be calculated.

The variable PDN[OPER.2] is the nominal heating rate applied to the fuel in the system. The fuel volume is based on the fuel diameter DFUEL[RODS.4], when a rod model is specified (NC[RODS.1]>0), or the rod diameter DR[RODS.3], when a rod model is not used (NC[RODS.1]=0). When a nonuniform heating rate is desired, NRPF is set greater than zero and the heating rate information for each assembly is read on OPER.7. When NRPF=1, the values for PDNA[OPER.7] are factors that are multiplied with PDN in OPER.2. When NRPF=2, the values for PDNA[OPER.7] are the actual heating rates and PDN[OPER.2] is ignored.

The axial heat generation distribution in each fuel rod assembly is specified using an axial heat generation profile read in OPER.16 and OPER.17. The number of axial heat generation profiles to be entered is specified in NAXP[OPER.1]. The heat generation profiles are numbered sequentially, from 1 to NAXP, in the order they are entered. A heat generation profile must be specified for each assembly with fuel rods in NAFLX on CHAN.5. The profile consists of a table of relative axial locations (Y[OPER.17]) and relative heat generation factors (AXIAL[OPER.17]) read in pairs. A total of NAX[OPER.16] pairs are read for each profile.

#### 3.4.2.2 Transient Forcing Functions

The COBRA-SFS code is structured to perform both steady-state and transient calculations. However, the transient capability has not yet been validated. The operating conditions described in Section 3.4.2.1 are adequate to define a steady-state problem. In a transient problem, however, one or more of these operating conditions may vary as a function of time. The input on lines OPER.9 through OPER.15 specifies transient forcing functions on the various operating parameters. The functions are expressed as a table of fractions of the steady-state value. This input is optional, and is read only when the appropriate flags on OPER.1(NP,NH,NG,NHX,NQ) are nonzero.

## 3.5 CODE CONTROL PARAMETERS

In this section, the parameters controlling the operation of the code are described. The parameters controlling the numerical solution procedure are specified in group CALC and discussed in Section 3.5.1. The parameters controlling the options available for output are specified in group OUTP and discussed in Section 3.5.2.

### 3.5.1 Calculational Parameters

Group CALC defines the calculational parameters needed to tell the code how to numerically solve the problem. The input specifies the simulation time and time step size for transients, the various convergence limits, damping and acceleration factors, and iteration limits required for the solution. A description of the numerical methods used to solve the flow and energy equations is found in Volume I (Rector, Wheeler, and Lombardo 1986) of this report.

The flow field within a spent fuel storage system is represented by channel axial flows and crossflows between channels. When the solution for crossflows is not desired, ISCHEME[CALC.1] is set equal to one, reducing the flow solution to parallel isolated channels. The elimination of crossflow usually has little noticeable effect on the temperature distribution within storage systems.

Some very large COBRA-SFS storage system models may exceed the storage capacity of some nonvirtual memory computers (such as a CDC (Control Data Corporation) machine). For this reason, the capability is provided to store

much of the problem data outside core memory on peripheral storage during execution. This capability is known as the "Roll Option" and is used when IROLL[OPER.1] is set equal to one. A more complete description of the ROLL option is found in Section 5.2.

The COBRA-SFS code has transient capabilities, but these have not been validated. If a transient calculation is desired, the total transient time TTIME[CALC.2] is specified and the type of time step used is determined by the flag ITSTEP[CALC.1]. When ITSTEP equals zero, the time steps are assumed to be uniform where NDT[CALC.3] is the number of time steps and the time step size is (TTIME/NDT). A variable time step table can be specified by setting ITSTEP $>$ 0. A table of time step size versus time is read on CALC.4 with ITSTEP entries. The transient forcing functions specified in group OPER must extend over the total transient time specified in TTIME[CALC.2].

For a steady-state problem, or for each time step in a transient, the problem is ended when certain convergence criteria are satisfied. These convergence criteria include the convergence limits for the recirculation solution scheme (WERRY[CALC.2]), for axial flow (FERROR[CALC.2]) for fluid enthalpy (HERROR[CALC.2]), and for total energy (QERROR[CALC.2]). Convergence limits are defined in nondimensional form so that the relative magnitude of the variable does not affect the rate of convergence. If these and other criteria are not met, the problem is ended based on the maximum number of external iterations allowed specified in NTRIES[CALC.3]. The default value for NTRIES is 20. The actual number required for a given problem will depend on its size and complexity. If a problem does not converge in the specified number of iterations, the restart option can be used to continue the calculation for additional iterations.

The damping and acceleration factors used to control various aspects of the numerical solution are entered on CALC.2. All factors are applied as

$$X^n = \alpha X^n + (1 - \alpha)\, X^{n-1} \tag{3.23}$$

where X = calculational variable

$\alpha$ = damping or acceleration factor

n = current iteration number.

Factors are read for the pressure drop term in the transverse momentum equation (DAMPNG), the Gauss-Siedel solution of the momentum equations (ACCELY), axial flow (ACCELF), fluid density (ACCRHO), the solid structure energy equation solution (ACCELW), the rod energy equation (ACCROD), and the axial energy rebalancing (ACCAX).

The damping factor for fluid density (ACCRHO) may be important for problems where the flow field and energy solutions are tightly coupled, such as in a problem dominated by natural convection. When small changes in the fluid energy solution result in dramatic changes in the flow field solution, a small value for ACCRHO can be used to stabilize the problem by gradually introducing the change in flow due to the energy solution.

The damping factor for the rod energy solution (ACCROD) may be important for problems where the rod and fluid energy equations are loosely coupled, i.e., where there is a small rod-to-fluid heat transfer coefficient. The rod equation is written in terms of fluid temperature and a small heat transfer coefficient may result in large rod temperature fluctuations during the iterative solution procedure. A small (~0.1) value for ACCROD may be used to stabilize the rod energy solution.

The axial energy rebalancing was developed to quickly reduce the total energy error of the problem. It is applied on the upsweep of every third iteration. If rebalancing is not desired, it may be removed by specifying a small value for ACCAX.

### 3.5.2 Output Options

Group OUTP allows the user to select the information to be written to the output file. The default is to print everything; i.e., information on all channels, rods, lateral flow connections, and solid structure nodes, for every axial level and at every time step in a transient. For large problems, or long-running transients, the amount of output generated may be extremely large. In this case, the user may want to limit the output, either by

restricting the number of channels, rods, lateral flow connections, or solid structure nodes for which output will be produced, or by limiting the frequency of output generated during a transient.

The flags for each output group are specified in OUTP.1. These include the flags for channel output (NCOUT), rod output (NROUT), lateral flow connection output (NGOUT), and solid node output (NWOUT). When any of these flags are set equal to zero, there is no output for that group. When NALL[OUTP.1] is set equal to one, it is the same as if all the individual output group flags were set equal to one.

When an output group is specified, it is assumed that the entire group will be printed. When only selected members of a group are desired, a flag specifying the number of members to be printed is specified in OUTP.1. The number of channels to be printed is specified in NPCHAN[OUTP.1] and the individual channels are listed in OUTP.2. The number of individual rods to be printed is specified in NPROD[OUTP.1] and the individual rods are listed in OUTP.3. The number of lateral flow connections to be printed is specified in NPGAP[OUTP.1] and the individual connections are listed in OUTP.4. The lateral flow connections are not printed when crossflows are not calculated (ISCHEME[CALC.1]=1). The number of solid structure nodes to be printed is specified in NPWALL[OUTP.1] and the individual solid nodes are listed in OUTP.5.

The output may also be reduced by printing results for a limited number of axial levels or time steps in a transient. The number of axial levels to be printed may be reduced by specifying NSKIPX[OUTP.1], which is the number of axial nodes to skip when printing results. For example, the printing of results for every third axial level may be specified. The number of time steps printouts may be reduced by either specifying NSKIPT[OUTP.1], which is the number of time steps to skip between printed results, or TRANT[OUTP.6], which is the time interval between output in a transient.

Output summaries for assembly-average values and/or channel exit values are specified using the flag NPAVG[OUTP.1]. The assembly average summary provides the total assembly flow, as well as the average enthalpy, temperature, mass flux, velocity, etc., for each assembly at each axial level. The channel

exit summary provides the fluid enthalpy and flow for each channel at the top axial level. The channel exit summary is especially useful for forced convection problems where the peak temperature occurs at the top of the problem.

## 4.0 DIMENSION PARAMETERS

The dimensions of the arrays in COBRA-SFS are defined with PARAMETER statements in COMDECK SPECS. The required values for the dimensions on the various arrays in the code are problem-dependent, and the user can change the dimensions by changing the PARAMETER statements via UPDATE. There are 43 dimension parameters that must be specified by the user, (or, the user must verify that the existing value in the PARAMETER statement is adequate for the given problem). These parameters are listed below, with their definitions and standard values. The user must specify each of these dimensions at a value appropriate to his problem. There are error-checks in the subroutines that process the input stream for the code and look for dimension errors, but these checks can only catch the errors that the code developers had the foresight to anticipate.

In addition to the user-specified parameters listed below, COMDECK SPECS contains a large number of parameters that are calculated by the code using the user-specified dimensions. These parameters are used to dimension solution arrays, and to define the equivalencing locations for the large storage arrays, such as SAVEAL, used with the ROLL option. DO NOT MAKE CHANGES TO CODE CALCULATED PARAMETERS.

The user-specified dimension parameters for COBRA-SFS are defined as follows:

MA - Maximum number of channels that can have area variations. (For arrays read in group VARY; checked against NAFACT on VARY.1.)

MC - Maximum number of channels. (For arrays read in group CHAN; checked against the sum of NCHANA on CHAN.4 for all assemblies.)

LIROLL - Roll option flag. If LIROLL equals 0, the roll option cannot be used. If LIROLL equals 1, dimensioning and equivalencing parameters will be calculated for the ROLL option. (Note: If LIROLL is 1, the ROLL option <u>must</u> be specified in the input file; see input line CALC.1.)

MG - Maximum number of channel gap connections. (For arrays read in group CHAN; checked against the total number of entries in the LC, GAPS, DIST arrays on CHAN.6 for all assemblies.)

MH - Maximum number of connections between a given wall node and other wall nodes for conduction heat transfer. (For arrays read in group SLAB; checked against NSLAB on SLAB.3 plus all reciprocal connections for each node.)

MI - Maximum number of connections between a channel and other lateral channels, for flow. (Flow connections are specified on CHAN.6. MI must be greater than the maximum number of entries in the LC array on CHAN.4 for any given channel.)

MJ - Maximum number of assembly groups in network model. (For arrays defined in group DRAG; checked against NOGRP on DRAG.1.)

MK - Maximum number of axial locations with local axial loss coefficients. (For arrays defined in group DRAG; checked against the maximum value of NLEV on DRAG.4.)

ML - Maximum number of axial locations for lateral flow connection width or channel area variations. (For arrays read in group VARY; checked against NAXL and NGXL on VARY.1.)

LMM - Maximum number of points in tables for

- loss coefficient versus Reynolds number (NLCFF on DRAG.1)
- inlet mass flux or pressure drop versus time (NG on OPER.1)
- heating rate versus time (NQ on OPER.1)
- system pressure versus time (NP on OPER.1)
- inlet or exit enthalpy versus time (NH and NHX on OPER.1).

MN - Maximum number of fuel nodes at an axial level within a rod, plus 2. (For arrays read in group RODS; checked against one plus NC on RODS.1.)

MP - Maximum number of entries in tables for
- fluid properties (NPROP on PROP.1)
- axial heat flux profile (maximum value of NAX(I) on OPER.16)
- variable time step size versus time (ISTEP on CALC.1).

MQ - Maximum number of channel groups used to specify axial loss coefficients in any one assembly type. (For arrays defined by in group DRAG; checked against the maximum value of NLCOEF in DRAG.4.)

MR - Maximum number of fuel rods. (For arrays defined in group RODS; checked against sum of NORODS, read on RODS.2, for all assemblies.)

MS - Maximum number of lateral flow connections that can have width variations. (For arrays read in group VARY; checked against NGAPS on VARY.1.)

MT - Maximum number of fuel types. (For arrays read in group RODS; checked against NFUELT on RODS.1.)

MV - Maximum number of axial heat flux profiles. (For arrays read in group OPER; checked against NAXP on OPER.1.)

MW - Maximum number of wall nodes. (For arrays read in group SLAB; checked against NWK on SLAB.1.)

MX - Maximum number of axial levels. (For all arrays indexed by axial level; checked against 1 plus NDX on CHAN.1.)

ME - Maximum number of axial levels for arrays stored in the ROLL option. (See parameter LIROLL.) If the ROLL option is <u>not</u> used, (LIROLL=0), ME must equal MX. If the ROLL option is used (LIROLL=1), ME must equal 3.

MY - Maximum number of zones for axial fuel type variations. (For arrays defined in group RODS; checked against NZONE on RODS.7.)

ND - Maximum number of channels connected to a given wall node. (For arrays defined in group SLAB; checked against the maximum value of NCHN on SLAB.5.)

NO - Maximum number of axial boundary temperature profiles. (For arrays defined in group BDRY; checked against NBTEMP on BDRY.1.)

NV - Maximum number of user-defined radiation groups. (For array FVW, defined in group RADG; checked against NRADG on RADG.1.)

LNZ - Maximum number of surfaces in a user-defined radiation group. (For array FVW, defined in group RADG; checked against maximum value of NSURF on RADG.2.)

ID - Maximum number of solid material property types. (For arrays defined in group PROP; checked against NSPROP on PROP.1.)

IH - Maximum number of second-order connections to a channel. (Second-order connections are defined as connections from a channel to another channel by heat transfer through a rod. This can be illustrated by referring to Figure 4.1. (In Figure 4.1(a), channel 5 has second-order connections to channels 1, 3, 7, and 9. For this case, IH = 4. In Figure 4.1(b), channel 6 has second-order connections to channels 1, 2, and 3 through rod 1, to channels 4, 9, and 10 through rod 2, and to channels 8, 12, and 13 through rod 3. For this case, IH = 9.)

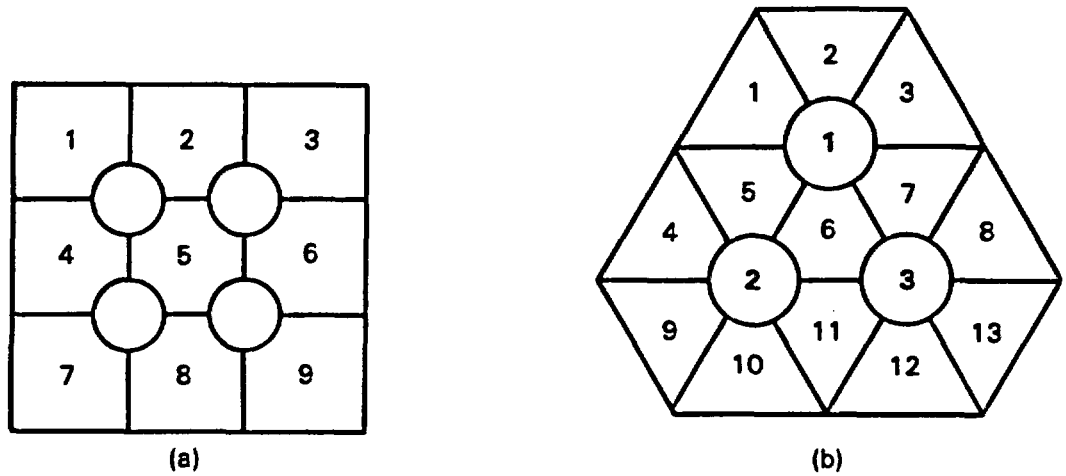


FIGURE 4.1. Subchannel Geometries Illustrating Second-Order Thermal Connections

IE - Bandwidth of coefficient matrix for the energy and momentum solutions. This parameter must be specified as the maximum of the following terms:

- maximum width of the crossflow connection matrix, defined by (2*IWIDE+1), where IWIDE is the maximum difference between the indices of two channels with a lateral flow connection
- (MI+IH+1).

LIF - Maximum number of boundary connection types. (For arrays defined in group BDRY; checked against NBTYP on BDRY.1.)

LIP - Maximum number of radial boundary regions plus one. (For arrays defined in group BDRY; must be greater than the maximum value of NHSID(I) on BDRY.4.)

IQ - Maximum number of side boundary nodes. (For arrays defined in group BDRY; checked against NWSID on BDRY.1.)

LIR - Maximum number of rods connected to a channel. (For arrays defined in group RODS; checked against the number of occurrences of any channel number in the LR array on RODS.3.)

LIT - Maximum number of assembly types. (For arrays defined in group CHAN; checked against the maximum value of ITYPA on CHAN.4.)

IU - Maximum number of assemblies. (For arrays defined in group CHAN; checked against NASSEM on CHAN.1.)

LIW - Maximum of the following three terms:
- number of entries in loss coefficient forcing function tables (NLCFP on DRAG.1)
- number of friction factor correlations (NFRICT on DRAG.1)
- number of heat transfer correlations (NHEAT on HEAT.1).

LIX - Maximum number of separated flow regions within an assembly. (For arrays defined in group CHAN. Separated regions are defined by groups of channels within an assembly that have no lateral flow connections between them.)

LIZ - Maximum number of connection types for wall-to-wall or wall-to-fluid heat transfer. (For arrays defined in group SLAB; checked against the maximum of NKSS and NKSF, on SLAB.1.)

LA - Number of surfaces for radiation exchange in enclosure type 1. (On tape 10, read in group RADG; checked against MM1 for MM2 = 1 on RADG.6.)

LB — Number of surfaces for radiation exchange in enclosure type 2. (On tape 10, read in group RADG; checked against MM1 for MM2 = 2 on RADG.6.)

LLC - Number of surfaces for radiation exchange in enclosure type 3. (On tape 10, read in group RADG; checked against MM1 for MM2 = 3 on RADG.6.)

LD - Number of surfaces for radiation exchange in enclosure type 4. (On tape 10, read in group RADG; checked against MM1 for MM2 = 4 on RADG.6.)

LE - Number of surfaces for radiation exchange in enclosure type 5. (On tape 10, read in group RADG; checked against MM1 for MM2 = 5 on RADG.6.)

LF - Number of surfaces for radiation exchange in enclosure type 6. (On tape 10, read in group RADG; checked against MM1 for MM2 = 6 on RADG.6.)

The standard version of COBRA-SFS has the following values for the user-specified parameters in COMDECK SPECS:

```
PARAMETER(MA=1,MC=95,MX=34,ME=MX,LIROLL=1,MG=160)
PARAMETER(MI=7,MJ=1,MK=1,ML=1,LMM=29)
PARAMETER(MN=5,MP=31,MQ=1,MR=80)
PARAMETER(MS=1,MT=10,MV=2,MW=60,MH=1)
PARAMETER(MY=4,ND=1,NO=1,NV=1)
PARAMETER(LNZ=16,ID=1,IE=21,LIF=1)
PARAMETER(LIP=1,IQ=8,LIR=6,LIT=7,IU=7)
PARAMETER(LIW=3,LIX=1,LIZ=1,IH=6)
PARAMETER(LA=57,LB=57,LD=72,LE=72,LF=72)
```

# 5.0 COBRA-SFS FEATURES

## 5.1 OVERALL CODE DESCRIPTION

The main program and executive routine in the COBRA-SFS code is called COBRA. COBRA transfers control to various subroutines to read input, solve the conservation equations, and print results. COBRA also handles most of the boundary condition specification. A flow chart indicating the function of the COBRA program is given in Figure 5.1. COBRA reads the first input card to determine if the run is to be a restart (i.e., pick up the results from an old solution and continue calculations, possibly with minor input changes), or a new case in which all the calculational variables are initially zeroed. An input card image listing is then generated for user debugging. If new input is to be read, COBRA calls the input routines, which are described in Section 5.1.1. Once the input has been read and the problem geometry and operating conditions established, COBRA begins the transient time loop with one pass through the loop for each time step. The first pass through this loop obtains a steady-state solution for the problem, which then serves as the initial condition for the transient. This steady-state solution is accomplished simply by setting the time step to a large number ($\Delta t = 10^6$) and solving it as though it were any other time step. Setting the time step to a large number effectively eliminates any contribution of the storage terms in the conservation equations.

Within the transient time loop in COBRA, the boundary conditions corresponding to the elapsed transient time are set. This includes setting the inlet temperature and the pressure drop or inlet flow for each subchannel. The appropriate routines for solving the conservation equations are then called. These routines are described to some extent in Appendix A, but this section describes them in terms of their interaction with other parts of the code. When control is returned to program COBRA, a solution to the conservation equations has been obtained for that time step. A routine is then called to print the desired results and the calculations continue with the next time step.

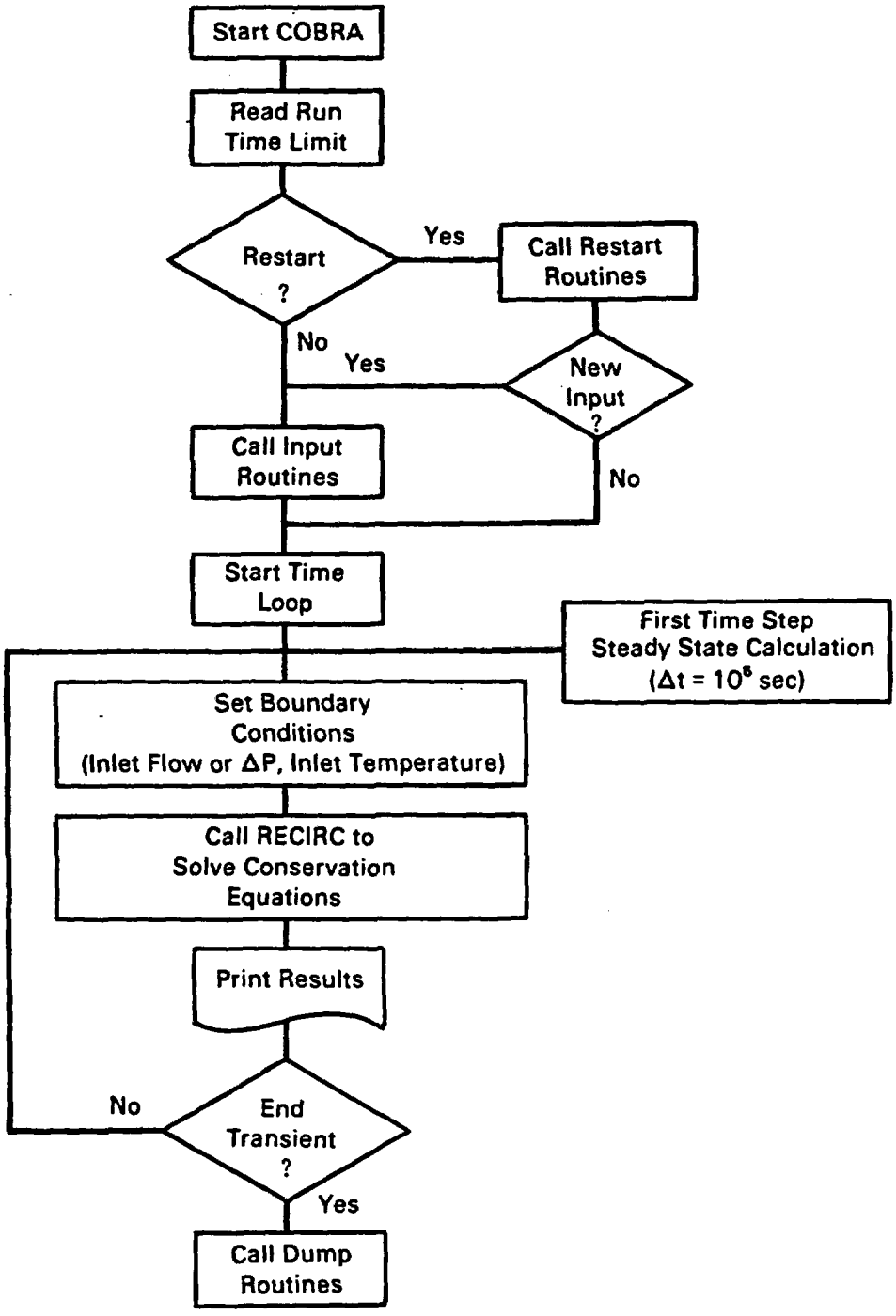


FIGURE 5.1. Flow Chart for COBRA

### 5.1.1 Input Subroutines

The input subroutines have been split into three parts: SETUP, SETIN and SETOUT. Subroutine SETUP, which is the routine called by program COBRA, does not read any input but acts as the input executive routine. SETUP first calls subroutine SETIN, which manages all data input. Each group is headed by a group card that provides information to subroutine SETIN for transferring control to a part of the subroutine that processes the rest of the information in that group. When all groups have been processed, control is returned to SETUP where some further calculations are done to establish all the parameters necessary to start the run. Subroutine SETOUT is then called to print out all the information generated by SETIN and SETUP. This printout provides the user with an easy means for checking to see that the code is running the problem that he intended to run. Following this, control is returned to SETUP and then back to COBRA to begin the time loop.

### 5.1.2 Solution of the Conservation Equations

At each time step, control is passed to subroutine RECIRC for solution of the conservation equations. Figure 5.2 lists the program flow for subroutine RECIRC. A call to subroutine PREFIX is necessary to calculate the constant matrix elements used in the energy equation solution scheme and to establish the indexing arrays for the rod and subchannel connections. The first pass through all of the axial levels is then started with calls to REHEAT and ENERGY, which calculate the variable matrix elements for the energy solution and solve the energy equations for the first level of computational cells. A call to PROP gives the fluid densities, subchannel heat transfer coefficients, and friction factors. HOTROD is called to update the rod temperatures. The tentative axial and transverse flow rates, based on the current pressure distributions, are calculated in subroutine MOMENT.

Once the axial sweep has been completed, the flow and pressure field are solved for simultaneously in subroutine RECIRC. The iterative solution procedure performs alternate sweeps through the axial levels and through the channels. The flow field solution is described in more detail in Volume 1 (Rector, Wheeler, and Lombardo 1986) of this set.

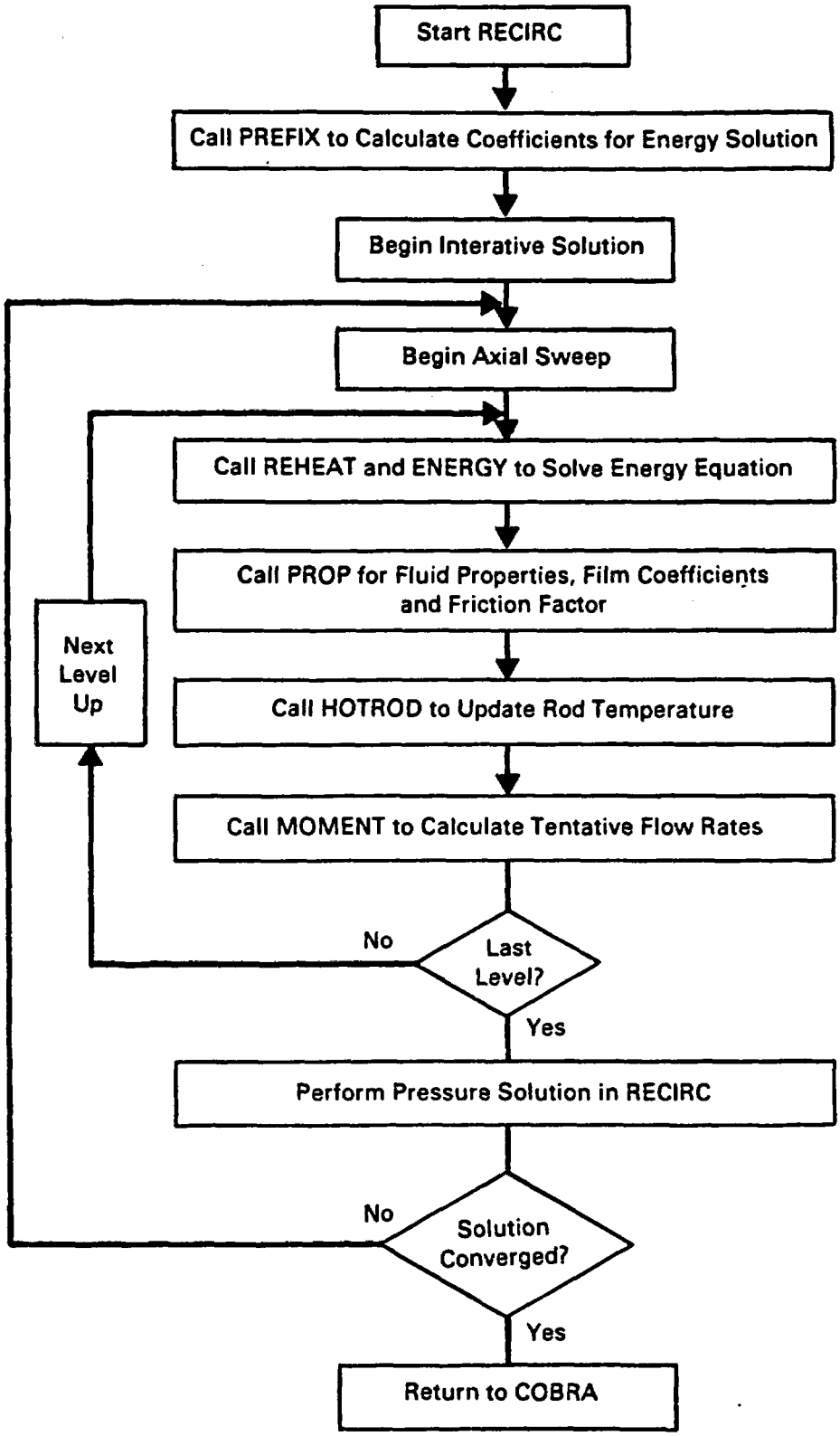


FIGURE 5.2. Flow Chart for Subroutine RECIRC

If a flow reversal occurs, a reverse axial sweep is performed, calling all the same subroutines as the upsweep (except MOMENT) to solve the energy equations.

When an iteration has been completed, the convergence is checked at this point. If the percent change in any of the axial flows, enthalpies, or temperatures is greater than the user-specified convergence criteria, then all the levels are swept through again. When convergence has been obtained, control is returned to program COBRA for the next time step.

## 5.2 ADDITIONAL DATA STORAGE OPTION

Simulations modeling very large casks with the COBRA-SFS code may exceed the storage capacity of some nonvirtual memory computers (such as the CDC 7600 computer system). For this reason, the capability is provided to store much of the problem data outside core memory on peripheral storage during execution. Data is transferred to and from the peripheral files using the large array SAVEAL, which stores the solution arrays in proper sequence using variable equivalencing. The location of the beginning point at which each of the various arrays is equivalenced to SAVEAL is computed automatically from the user-defined parameters, described in Section 4.0. The user does not need to concern himself about these parameters; the description given here is for information only. The only dimension parameter considerations in selecting the ROLL option that the user must be cognizant of are that parameter ME must be set equal to 3, and parameter LIROLL must be 1. When the ROLL option is <u>not</u> used, then ME must be set equal to MX and LIROLL must be equal to zero. (There are error checks in the code to ensure that this stricture is observed.) This capability is known as the "Roll Option".

Since the calculations necessary to solve the conservation equations at any axial level require only information for that level and the levels above and below it, only that information is made available in core if the ROLL option is requested. Data for all other levels is stored on peripheral files. As the solution algorithm moves from one level to the next, information from the J-1 level is written out to the peripheral file space and data for the

J+1 level is read into the core. These data transfers are taken care of by the subroutines ROLLIT, IMAGE, and entry COPY.

Twenty-two arrays are equivalenced to the SAVEAL array to store the solution variables for the ROLL option. These variables are listed in Table 5.1, with their locations in SAVEAL indicated, along with the length stored for a given level. The gap variables, W, WOLD, GAP, and DWDP, are stored for all possible gaps (dimension parameter MG). The structural node variables, TWALL and TWOLD, are stored for all possible structural nodes (dimension parameter MW). The rod variables, IFTYP, FLUX, and HSURF, are stored for all possible rods (dimension parameter MR), with the rod temperature array, TROD, stored for all possible nodes in all rods, (dimension parameters MN times MR). The channel variables, P, F, RHO, HOLD, A, DHYD, H, FOLD, RHOOLD, RHOBAR, DFDP, and APP, are stored for all possible channels, (dimension parameter MC). The total length of the SAVEAL array is calculated from the user-defined parameters MG, MW, MR, MN, and MC to be large enough to hold three levels of each of these 22 arrays. The arrays SAVEA1, SAVEA2, and SAVEA3 are used to read and write the values in level (j-1), level j, and level (j+1), respectively, to and from the peripheral files. These arrays are dimensioned by parameter M1, which is calculated from the user-defined parameters MG, MW, MR, MN, and MC to be at least as large as (4*MG+2*MW+(4+MN)*MR+12*MC). The SAVEA1, SAVEA2, and SAVEA3 arrays are equivalenced to the SAVEAL array at the beginning locations shown in Table 5.2.

The ROLL option also entails a data overlay in the pressure solution that uses SAVEAL to store the pressure solution variables for all channels and gaps at all axial levels. These variables include arrays for the pressure, the axial flow, the axial flow derivative with respect to pressure, the crossflow, and the crossflow pressure derivative. The values for these variables obtained in the level-by-level solution are saved on a peripheral file by copying then to the SAVRI array, and writing them out. The SAVEAL array can them be employed, using the equivalencing shown in Table 5.3. The channel arrays, PR, FR, DFDPR, and DELR are stored for all possible channels and axial levels, (MC*MX), and the gap arrays, WR and DWDP, are stored for all possible gaps and axial levels (MG*MX). Because it serves this dual

purpose, the dimension of the SAVEAL array must be great enough to accommodate both sets of overlays. The SAVEAL array is dimensioned by parameter M2, which is calculated from the user-specified parameters as the maximum of M1 and [4*MC*MX+2*MG*MX].

TABLE 5.1. SAVEAL Array Equivalencing for Level-by-Level Solution

| Variable Equivalenced | Length | Dimensions |
|---|---|---|
| SAVEAL(1) = W(1,1) | MG | W(M1,ME) |
| SAVEAL(ME) = WOLD(1,1) | MG | WOLD(M1,ME) |
| SAVEAL(LM4) = GAP(1,1) | MG | GAP(M1,ME) |
| SAVEAL(M5) = DWDP(1,1) | MG | DWDP(M1,ME) |
| SAVEAL(NY) = TWAL(1,1) | MW | TWALL(M1,ME) |
| SAVEAL(LNU) = TWOLD(1,1) | MW | TWOLD(M1,ME) |
| SAVEAL(M9) = IFTYP(1,1) | MR | IFTYP(M1,ME) |
| SAVEAL(LMB) = FLUX(1,1) | MR | FLUX(M1,ME) |
| SAVEAL(MD) = HSURF(1,1) | MR | HSURF(M1,ME) |
| SAVEAL(MF) = TROD(1,1,1) | MN*MR | TROD(MN,LN4,ME) |
| SAVEAL(MU) = P(1,1) | MC | P(M1,ME) |
| SAVEAL(LNP) = F(1,1) | MC | F(M1,ME) |
| SAVEAL(LNC) = RHO(1,1) | MC | RHO(M1,ME) |
| SAVEAL(LNG) = HOLD(1,1) | MC | HOLD(M1,ME) |
| SAVEAL(LNS) = A(1,1) | MC | A(M1,ME) |
| SAVEAL(NL) = DHYD(1,1) | MC | DHYD(M1,ME) |
| SAVEAL(LNA) = H(1,1) | MC | H(M1,ME) |
| SAVEAL(NX) = FOLD(1,1) | MC | FOLD(M1,ME) |
| SAVEAL(LNN) = RHOOLD(L,1) | MC | RHOOLD(M1,ME) |
| SAVEAL(LNT) = RHOBAR(1,1) | MC | RHOBAR(M1,ME) |
| SAVEAL(LNR) = DFDP(1,1) | MC | DFDP(M1,ME) |
| SAVEAL(NE) = APP(1,1) | MC | APP(M1,ME) |

TABLE 5.2. Roll Option Utility Arrays

| Variable Equivalenced | Length | Dimensions |
|---|---|---|
| SAVEAL(1) = SAVEA1(1) | M1 | SAVEA1(M1) |
| SAVEAL(LNK) = SAVEA2(1) | M1 | SAVEA2(M1) |
| SAVEAL(NW) = SAVEA3(1) | M1 | SAVEA3(M1) |

TABLE 5.3. SAVEAL Array Equivalencing for the Pressure Solution

| Variable Equivalenced | Length | Dimensions |
|---|---|---|
| SAVEAL(1) = PR(1,1) | MC*MX | PR(IL,IM1) |
| SAVEAL(LI1) = FR(1,1) | MC*MX | FR(IL,IM1) |
| SAVEAL(LI2) = DFDPR(1,1) | MC*MX | DFDPR(IL,IM1) |
| SAVEAL(LI3) = DELR(1,1) | MC*MX | DELR(IL,IM1) |
| SAVEAL(LI4) = WR(1,1) | MG*MX | WR(IN,IM1) |
| SAVEAL(LI5) = DWDPR(1,1) | MG*MX | DWDPR(IN,IM1) |

## 5.3 DUMP AND RESTART

The COBRA-SFS code also has the ability to store, or dump, all necessary information at the end of a computation for use at a later time to restart and continue the calculation. The dump and restart capability can be used to continue iterating to a steady-state solution or to extend a transient calculation for additional time steps.

In running the code to a steady-state solution, the calculation may terminate before convergence if more than a user-specified maximum computation time has been used or if convergence has not been achieved in a specified number of iterations. If the user takes the necessary steps to permanently store the dumped information (which is written to I/O unit 8), he can restart the solution and continue iterating toward a converged solution at a later time. At the time of restart the user may also change some of the problem

input, in which case the dumped solution may be used as a first guess for the solution to the new problem.

In running a transient calculation, the dump and restart capability can be used to break up a long calculation into more manageable jobs. It also enables the user to monitor the progress of the simulation. In this case, the user specifies a number of time steps or transient seconds to be run before dumping the solution. The user may then continue the transient run, with or without making changes to the input, by using the restart option.

At the time a run is completed, a call to subroutine DUMPIT writes out all of the necessary information stored in the core and on external devices to a file identified by I/O unit 8. When a restart run is made at a later time, subroutine RESTRT is called to read the contents of the dump file into the variables stored in the core, and put the necessary information on the external devices.

The dump/restart option is extremely simple to use in COBRA-SFS. The dump file I/O unit 8 is automatically written at the end of a calculation, so all the user has to do to preserve the results for later use is save the file on unit 8 in some permanent form. To restart the calculation requires only a minimal input file consisting of the restart flag (a negative value entered for MAXT on input line COBRA.1; see Section 2.1), one line of restart input data (input line COBRA.2), and the case title card (COBRA.3), followed by an ENDD card. The user must exercise some care, however, in determining that the file currently available on I/O unit 8 when the restart is executed is the correct one. Also, if the original dump tape is to be preserved for later restarts, it must be saved under a different name or on some appropriate permanent file storage space. The restarted calculation will, in turn, write a dump file to I/O unit 8, overwriting the file read at the beginning of the calculation.

## 5.4 CODE CONVERSION

The COBRA-SFS code has been developed to operate on either CDC or CRAY computer systems. In order to convert the code from one machine to the other, changes must be made to the source coding. The lines that are affected have been identified with the character string XCDC (for the CDC version of the code) or XCRA (for the CRAY version of the code) in columns 73-76 of the line. The code is converted by deactivating (commenting out or deleting) lines associated with the other version while activating lines associated with the desired version. For example, when converting from a CDC to CRAY version, comment out the lines with the character string XCDC and remove comments from lines with the character string XCRA.

## 6.0 RADX-1 - RADIATION EXCHANGE FACTOR GENERATOR

The thermal radiation heat transfer models used in the COBRA-SFS code require a set of graybody exchange factors, $F_{ij}$, which describe the amount of energy transferred from each surface to every other surface in an enclosure. These exchange factors are obtained from the input read in group RADG. For simple enclosures with relatively few surfaces, the exchange factors may be calculated from blackbody viewfactors and surface emissivities, which are input directly in lines RADG.2 and RADG.3. However, for a rod bundle with hundreds of radiation surfaces, this would be an extremely arduous task. For this reason, a support computer program, RADX-1, was developed to generate graybody exchange factors for rods in square arrays. A description of the theory behind the program RADX-1 is found in Volume I of this set (Rector, Wheeler, and Lombardo 1986). The input for program RADX-1 is presented below.

RADX-1.1 NROWS,PDR,EMROD,EMWALL,IFULL,IHALF,IEIGHT,IALL
FORMAT(I5,3F5.3,1X,4I1)

| Columns | Variable | Description |
|---|---|---|
| 1-5 | NROWS | Number of rows of rods. |
| 6-10 | PDR | Pitch-to-diameter ratio ($1<PDR\leq\sqrt{2}$). |
| 11-15 | EMROD | Surface emissivity of the fuel rods. |
| 16-20 | EMWALL | Emissivity of all the surrounding solid surfaces (if no value is read, the emissivities for each surface is read on RADX-1.2). |
| 22 | IFULL | Flag for printing the full bundle exchange factors:<br>= 0; do not print<br>= 1; print exchange factors |
| 23 | IHALF | Flag for printing the exchange factors for a half bundle with symmetry along the diagonal:<br>= 0; do not print<br>= 1; print exchange factors |

| Columns | Variable | Description |
|---|---|---|
| 24 | IEIGHT | Flag for printing the eighth bundle symmetry exchange factors:<br>= 0; do not print<br>= 1; print exchange factors. |
| 25 | IALL | Flag for printing all exchange factor groups:<br>= 0; output is controlled by IFULL, IHALF, and IEIGHT.<br>= 1; print exchange factor groups for full, half, and eighth bundle symmetry. |

RADX-1.2 (EMW(I),I=1,8) Read only if EMWALL=0 on RADX-1.1
FORMAT(8F5.3)

| Columns | Variable | Description |
|---|---|---|
| 1-5, 6-10, etc. | EMW(I) | Emissivity of each solid surface surrounding the rod bundle. |

The basic geometry input for the bundle includes the number of rows of rods (NROWS), the pitch-to-diameter ratio (PDR), and the flags for bundle symmetry (ISYM). The radiation surface locations associated with the graybody exchange factors are assigned internally in the program. It is assumed that the solid surface surrounding a full rod bundle is divided into eight radiation surface locations. The radiation surface location numbering scheme for a typical 8x8 rod bundle is shown in Figure 6.1 for a full bundle (IFULL=1) and Figure 6.2 for a half bundle with symmetry along the diagonal (IHALF=1). Figure 6.3 shows the numbering scheme for an eight-bundle symmetry (IEIGHT=1) of a typical 15x15 rod bundle.

The surface emissivities are read in EMROD, for the fuel rods, and EMWALL, for the surrounding solid surfaces. A value of 0.8 is recommended for the fuel rod emissivity. If a particular spent fuel assembly is surrounded by a variety of solid materials or surface finishes, resulting in different

emissivities, the variable EMWALL is left blank and emissivity values for each solid surface location are read in RADX-1.2. The radiation surface locations correspond to those shown in Figures 6.1 through 6.3.

The graybody exchange factors calculated in RADX-1 are based on quarter rod segments. For a full rod geometry, the exchange factors for the quarter rod segments are combined to provide full rod exchange factors.

In a COBRA-SFS problem with more than one type of fuel or fuel enclosure, the TAPE10 file created by a single execution of RADS-1 will not provide sufficient input for the viewfactor information needed in the code. An example of this is a problem containing both 7 x 7 and 8 x 8 fuel assemblies. The graybody viewfactors for these two geometries can be determined by two separate executions of RADX-1. The user must then combine the two resultant TAPE10 files to make a single file, corresponding to the RADG.4 through RADG.8 format, suited to the problem. The only information read in RADG.4 that is used in the COBRA-SFS calculations is EMR[RADG.4], the rest is for information only.

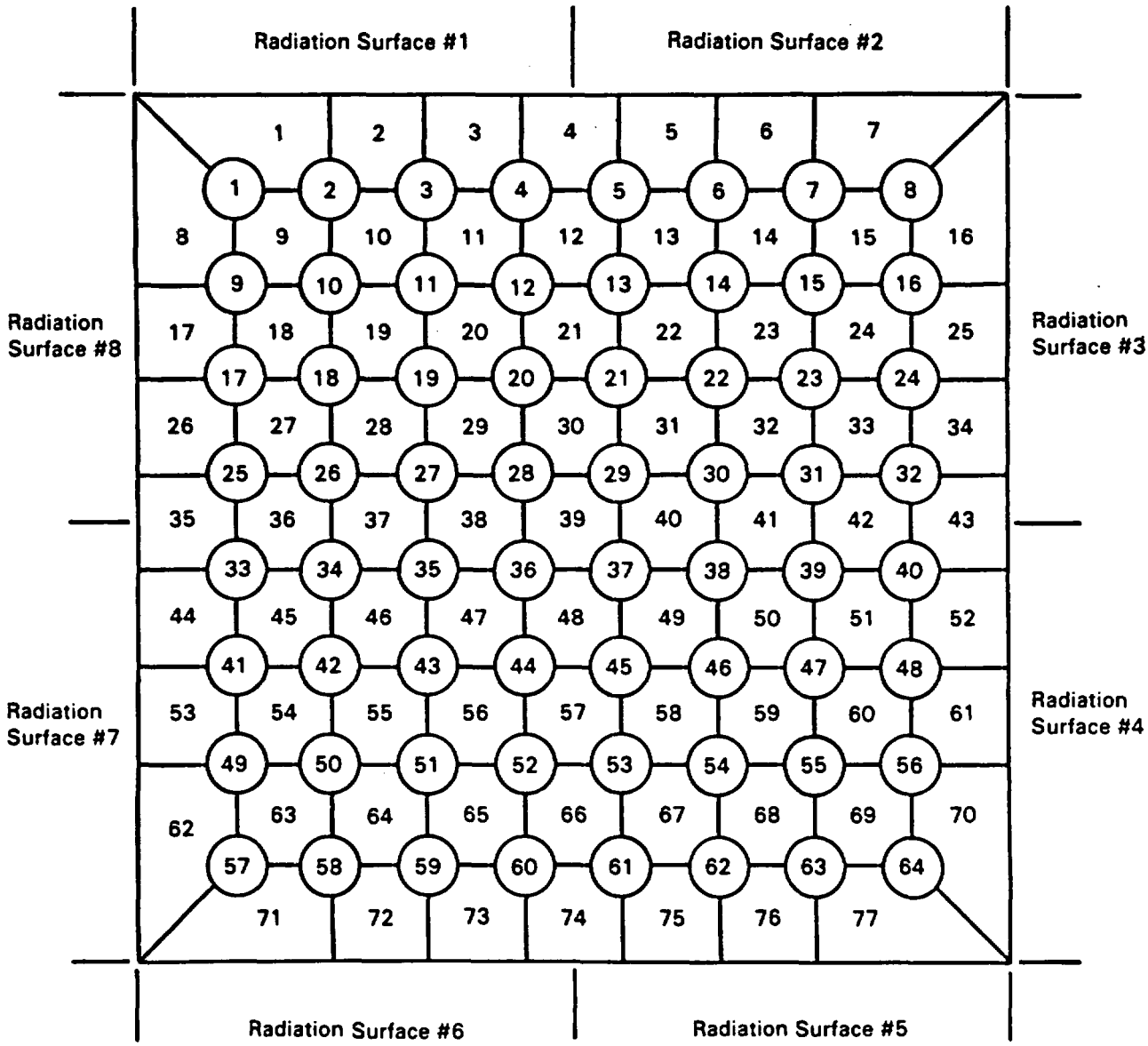


FIGURE 6.1. Radiation Surface Locations for a Full 8x8 Rod Bundle

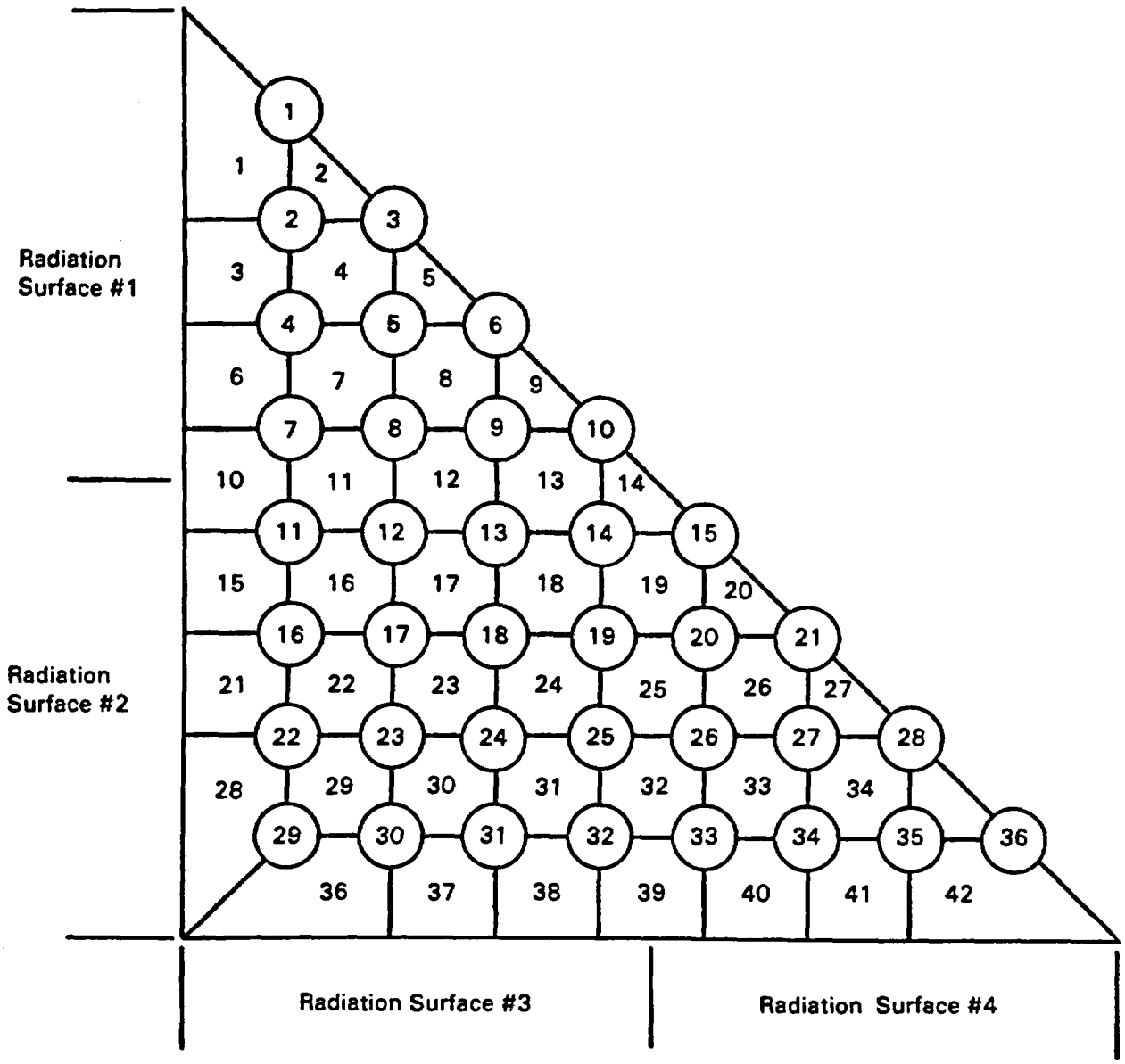


FIGURE 6.2. Radiation Surface Locations for a Half 8x8 Rod Bundle with Symmetry Along the Diagonal

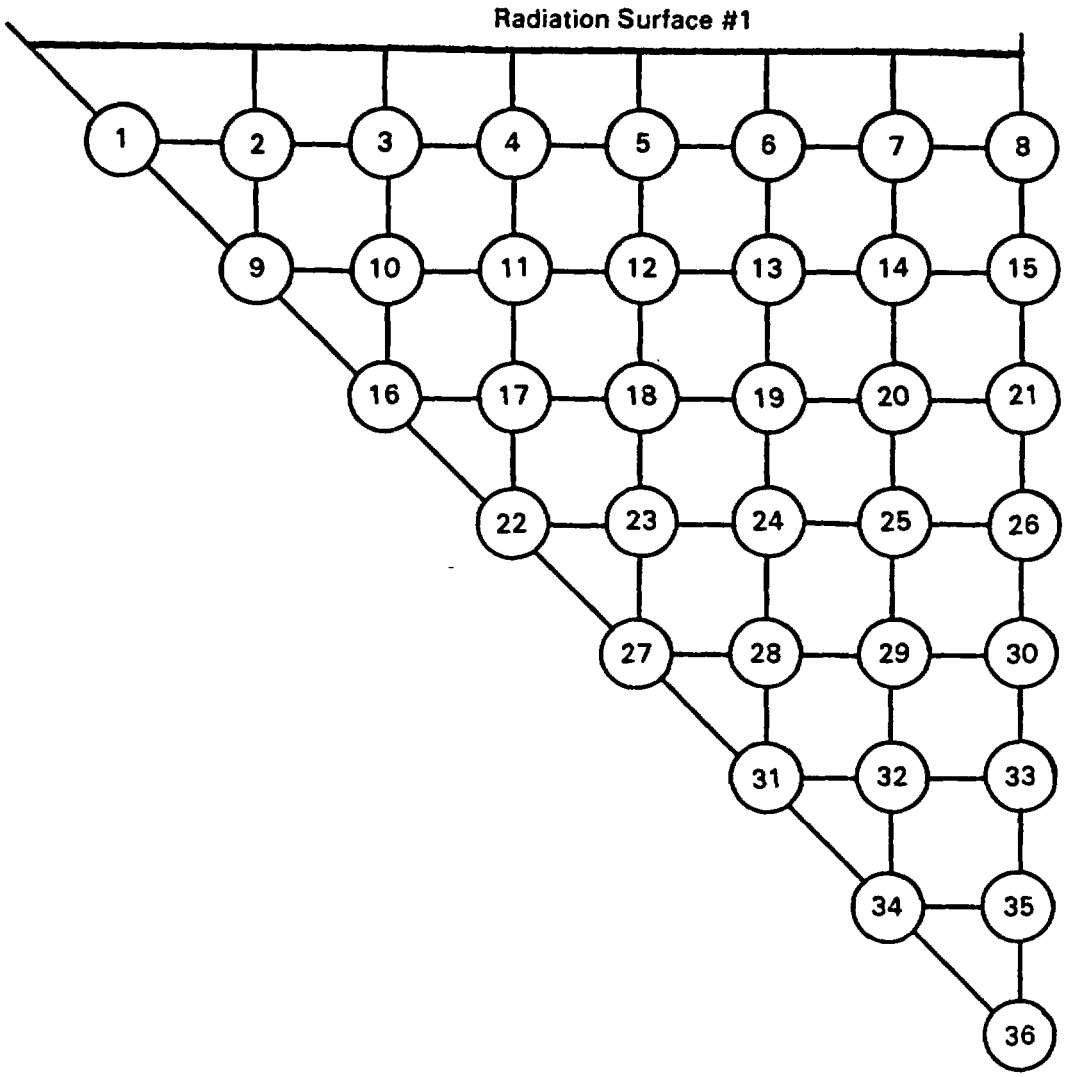


FIGURE 6.3. Radiation Surface Locations for a 15x15 Rod Bundle with Eighth Symmetry

# 7.0 SAMPLE PROBLEMS

This section contains two sample problems illustrating applications of the COBRA-SFS code. The sample problems serve two main purposes. First, they provide the user with examples that can be followed to help explain and clarify the relatively complicated input required to adequately describe a problem for the code. Second, they provide convenient test cases against which a user can benchmark his version of the COBRA-SFS code. This is not a comprehensive test, of course, but getting the same output for these problems from the same input should give the user some confidence that the code is correctly installed on his own computer system and is functioning in the same manner as the original.

Sample problem 1 consists of the thermal analysis of a hypothetical spent fuel cask. The sample cask and the COBRA-SFS model of the system are described in Section 7.1. Sample problem 2 is a liquid metal test assembly with natural convection as the dominant mode of heat transfer. This problem is discussed in detail in Section 7.2.

## 7.1 SAMPLE PROBLEM 1: THERMAL ANALYSIS OF A HYPOTHETICAL SPENT FUEL CASK

This sample problem consists of a hypothetical spent fuel cask with a greatly simplified geometry. The intent is to reduce the size of the problem to more easily manageable proportions, yet retain the degree of structural complexity typical of a spent fuel cask, so that this example will be relevant to real-world applications. Figure 7.1 shows a cross section of the cask at the midplane, and a vertical cross section of the axial length of the cask.

The cask contains four fuel assemblies, each consisting of four rods, in a 2x2 array. (This is the smallest possible array size that will produce subchannel geometry within the fuel assemblies.) The rods are 0.563 in. in diameter, and the array pitch is 0.740 in. The fuel assemblies fit into an aluminum basket contained within the inner cavity of the cask. The

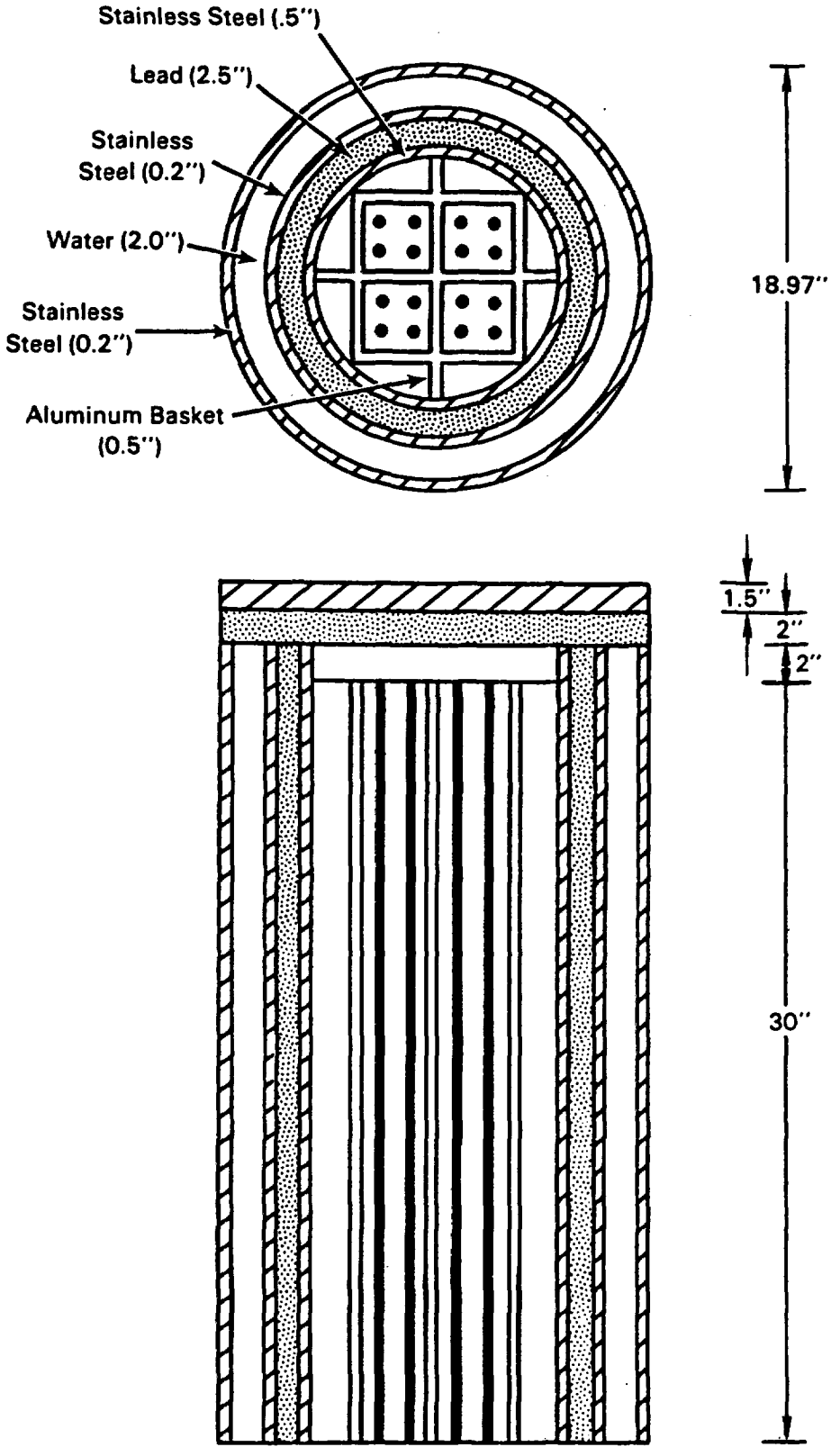


FIGURE 7.1. Geometry of a Sample Cask

cask body consists of a stainless steel shell 0.5 in. thick, surrounded by a 2.5-in. thick lead jacket for gamma shielding. The lead jacket is, in turn, surrounded by a stainless steel shell 0.2-in. thick. The outer surface of the cask consists of another stainless steel shell 0.2 in. thick. There is a 2-in. wide annular gap between these two shells filled with water to form a neutron shield.

The top of the cask is sealed by a lid consisting of a sheet of lead 2.0 in. thick, and a sheet of stainless steel 1.5 in. thick. The bottom of the cask is assumed to be adiabatic. (This is for convenience only, to further reduce the size of the problem. The code can model heat transfer through the bottom of a cask, as well as at the top.)

The basic structure of this sample cask is essentially what would be encountered in a real system. A real system would be more complex, with many more details to be accounted for, but the requirements for modeling a real system would be essentially the same as those outlined here.

### 7.1.1 COBRA-SFS Model for the Sample Spent Fuel Cask

The geometry of the sample cask is symmetrical around two axes (as shown in Figure 7.1), the decay heat generation of the spent fuel and the ambient boundary temperature seen from the outside surface of the cask are both assumed uniform, so the cask can be modeled for the code using a section of symmetry. A half-section was chosen, as illustrated in Figure 7.2. (A quarter-section would have been sufficient, but the half-section enables this problem to illustrate the correct input for multiple assemblies and fuel rod configuration types.) The COBRA-SFS model includes the fuel assemblies, the basket, and the inner cask body structure (including the lead shield and its outer stainless steel shell). The neutron shield and cask outer wall are modeled using the side boundary condition specification capability, and the top lid is modeled with the plenum heat transfer model using the input options available in input group BDRY.

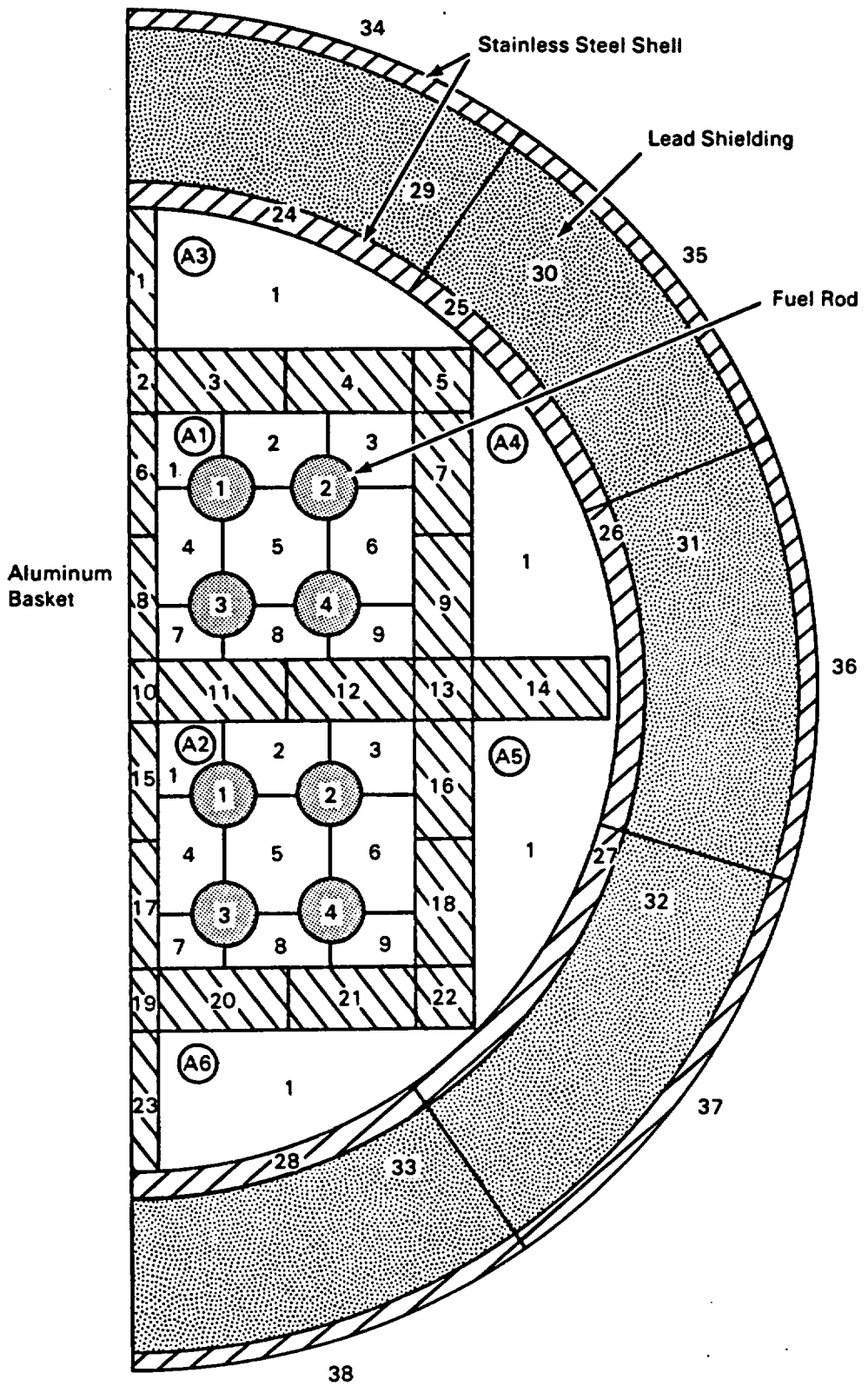


FIGURE 7.2. COBRA-SFS Model of Sample Cask

The two assemblies containing fuel rods (labeled A1 and A2 on Figure 7.2) are modeled with subchannels, numbered as indicated in Figure 7.2. The gaps between the rectilinear basket structure and the cylindrical inner shell are modeled using assemblies that do not contain fuel rods (labeled A3 through A6 in Figure 7.2). Assemblies A1 and A2 contain nine subchannels each, while the assemblies A3 through A6 are modeled with a single channel each. Table 7.1 lists the geometric parameters of the channels for each assembly. The information in this table is used to construct the channel input required for group CHAN. The axial length of the system is the distance from the bottom of the cask to the top of the fuel rods, (30.0 in., as shown in Figure 7.1).

The solid structure of the cask--the basket, steel shells, and lead shielding--were modeled using the heat transfer slab input in group SLAB. The aluminum plates constituting the basket were divided into 23 nodes, as shown by the numbering in Figure 7.2. Each node represents a point at which the code will solve for a temperature. This noding scheme yields a temperature in the basket at a point opposite each rod, at each corner of the basket, and in the basket plates separating the empty assemblies. The inner stainless steel shell, lead gamma shield, and outer stainless steel shell were divided into 5 nodes each, as illustrated in Figure 7.2, making a total of 38 nodes modeling the solid structure of the body of the cask.

TABLE 7.1. Channel Geometry for Sample Cask

| Assembly Number | Channel Number | Flow Area ($in.^2$) | Wetted Perimeter (in.) | Wetted Perimeter (in.) |
|---|---|---|---|---|
| A1,A2 | 1,3,7,9 | 0.4278 | 1.842 | 0.4422 |
| | 2,4,6,8 | 0.3936 | 1.624 | 0.8844 |
| | 5 | 0.2987 | 1.769 | 1.769 |
| A3-A6 | 1 | 2.086 | 6.790 | 0.0 |

The solid nodes of the basket and the inner shell have thermal connections to flow channels and to other solid nodes. The nodes representing the lead shield and outer shell connect only to other solid structure nodes. The solid-to-fluid connections are represented by 12 different thermal connection types, and the solid-to-solid connections are modeled with 14 different connection types for this geometry. Table 7.2 lists each of the solid-to-solid connection types, and identifies which solid nodes they apply to. Table 7.3 lists the solid-to-fluid connection types, and identifies the channels and solid nodes they connect.

Graybody viewfactors generated by program RADX-1 (see Section 6.0) were stored on I/O unit 10 for the assemblies containing rods (assemblies A1 and A2 on Figure 7.2). This radiation group was identified as radiation group number one. Blackbody viewfactors were calculated for two user-specified radiation group types to model radiation exchange in assemblies A3 through A6. Table 7.4 lists the blackbody viewfactors used for each type of enclosure. (These values were calculated using the Hottel crossed-string correlation method.) Emissivities were assumed to be 0.2 for the aluminum basket, and 0.25 for the stainless steel shell.

A critical step in supplying blackbody viewfactors for a radiation group type is that of specifying the actual heat transfer nodes that correspond to the surfaces identified for the blackbody exchange factors. Each node must be correlated with the correct surface. Table 7.5 shows the correspondence between the surfaces as named in the blackbody factor group types and the nodes that model the system. The information in these tables is used to supply the input for group RADG. The numbering convention used in viewfactor groups from RADX-1 (on I/O unit 10) is to number the wall surfaces facing the assembly from 1 to 8, starting on the left-hand side of the top surface. For user-defined groups, the numbering is arbitrary, and at the user's discretion.

The boundary specification options in COBRA-SFS are used to define the rest of the sample cask for this problem. Four side boundary types are used to define the connection from the stainless steel outer shell of the cask body to the ambient boundary temperature. In the upper plenum model, six radial boundary types and four axial boundary types are used to define the connection

TABLE 7.2. Solid-to-Solid Connection Types for Sample Cask

| Connection Type Number | Material | Thermal Resistance of Connection $(Btu/s\text{-}ft\text{-}°F)^{-1}$ | Nodal Connections[a] (from-to) | Structure |
|---|---|---|---|---|
| 1 | aluminum | 102.8 | 1→2,19→23 | basket |
| 2 | aluminum | 47.50 | 2→3,10→11,19→20 | basket |
| 3 | aluminum | 64.74 | 3→4,7→9,11→12, 16→18,20→21 | basket |
| 4 | aluminum | 47.50 | 4→5,5→7,9→13, 12→13,18→22,21→22 13→16 | basket |
| 5 | aluminum | 95.00 | 2→6,10→15,8→10, 17→19 | basket |
| 6 | aluminum | 129.5 | 6→8,15→17 | basket |
| 7 | aluminum | 51.40 | 13→14 | basket |
| 8 | stainless steel | 2089.0 | 24→25,25→26,26→27, 27→28 | innermost shell circumfer-ential connections) |
| 9 | stainless steel - lead | 99.6 | 24→29,25→30,26→31, 27→32,28→33 | innermost shell (radial connections) |
| 10 | lead | 273.2 | 29→30,30→31,31→32, 32→33 | lead shielding (circum-ferential connections) |
| 11 | stainless steel | 8655.0 | 34→35,35→36,36→37, 37→38 | outer shell (circum-ferential connections) |

(a) Refer to Figure 7.2 for node numbering scheme

TABLE 7.2. (contd)

| Connection Type Number | Material | Thermal Resistance of Connection $(Btu/s\text{-}ft\text{-}°F)^{-1}$ | Nodal Connections[b] (from-to) | Structure |
|---|---|---|---|---|
| 12 | aluminum - stainless steel | 504.0 | 1→24,23→28 | basket to inner shell $R_{gap}$ = 172.2; $\epsilon_{basket}$ = 0.20; $\epsilon_{wall}$ = 0.25; $A_{rad}$ = 0.25 |
| 13 | aluminum - stainless steel | 252.0 | 14→26 | basket to inner shell $R_{gap}$ = 86.40; $A_{rad}$ = 0.50 |
| 14 | lead - stainless steel | 66.24 | 29→34,30→35,31→36, 32→37,33→38 | lead shielding to outer shell |

(b) Refer to Figure 7.2 for node numbering scheme

TABLE 7.3. Solid-to-Fluid Connection Types for Sample Cask

| Connection Type Number | Thermal Resistance in Solid Node $(Btu/s\text{-}ft\text{-}°F)^{-1}$ | Perimeter (inches) | Connection(s) (Channel (assembly)→node) | Description |
|---|---|---|---|---|
| 1 | 11.16 | 0.70 | 1(1)→3,1(2)→11<br>3(1)→4,3(2)→12<br>3(1)→7,3(2)→16<br>7(1)→11,7(2)→20<br>9(1)→9,9(2)→18<br>9(1)→12,9(2)→21 | corner subchannels to adjacent basket nodes |
| 2 | 20.88 | 0.37 | 2(1)→3,2(2)→11<br>2(1)→4,2(2)→12<br>6(1)→7,6(2)→16<br>6(1)→9,6(2)→18<br>8(1)→11,8(2)→20<br>8(1)→12,8(2)→21 | side subchannels to adjacent basket nodes |
| 3 | 5.76 | 0.70 | 1(1)→6,1(2)→15<br>7(1)→8,7(2)→17 | corner subchannels to basket nodes on half-symmetry plate |
| 4 | 10.44 | 0.37 | 4(1)→6,4(2)→15<br>4(1)→8,4(2)→17 | side subchannels to basket nodes on half-symmetry plate |
| 5 | 7.28 | 1.07 | 1(3)→3,1(6)→20<br>1(3)→4,1(6)→21<br>1(4)→7,1(5)→16<br>1(4)→9,1(5)→18 | empty assemblies to basket side nodes |
| 6 | 3.27 | 1.19 | 1(3)→1,1(6)→23 | empty assemblies to basket nodes on half-symmetry plate |
| 7 | 6.48 | 1.19 | 1(4)→14,1(5)→14 | empty assemblies to ends of basket plate |
| 8 | 124.6 | 1.034 | 1(4)→26,1(5)→26 | empty assemblies to inner steel shell |
| 9 | 52.56 | 1.926 | 1(4)→25,1(5)→27 | empty assemblies to inner steel shell |

TABLE 7.3. (contd)

| Connection Type Number | Thermal Resistance in Solid Node $(Btu/s\text{-}ft\text{-}°F)^{-1}$ | Perimeter (inches) | Connection(s) (Channel (assembly)→node) | Description |
|---|---|---|---|---|
| 10 | 157.7 | 0.642 | 1(3)→25,1(6)→27 | empty assemblies to inner steel shell |
| 11 | 48.24 | 2.320 | 1(3)→24,1(6)→28 | empty assemblies to inner steel shell |
| 12 | 15.48 | 0.500 | 1(3)→5,1(4)→5<br>1(5)→22,1(6)→22 | empty assemblies to corner basket nodes |

TABLE 7.4. Blackbody Radiation Viewfactors for Cask Sample Problem

Group 1: Assemblies A3 and A6

| Surface Number | Perimeter (inches) | Emissivity | Blackbody Viewfactors to Surface N[a] 1 | 2 | 3 | 4 | 5 | 6 |
|---|---|---|---|---|---|---|---|---|
| 1 | 1.19 | 0.20 | 0.0 | 0.277 | 0.93 | 0.23 | 0.53 | 0.554 |
| 2 | 1.07 | 0.20 | 0.0 | 0.0 | 0.0 | 0.0 | 0.072 | 0.620 |
| 3 | 1.07 | 0.20 | 0.0 | 0.0 | 0.0 | 0.0 | 0.047 | 0.850 |
| 4 | 0.50 | 0.20 | 0.0 | 0.0 | 0.0 | 0.0 | 0.750 | 0.195 |
| 5 | 0.642 | 0.25 | 0.0 | 0.0 | 0.0 | 0.0 | 0.120 | 0.0 |
| 6 | 2.32 | 0.25 | 0.0 | 0.0 | 0.0 | 0.0 | 0.0 | 0.0 |
| Group 2: Assemblies A4 and A5 | | | | | | | | |
| 1 | 1.19 | 0.20 | 0.0 | 0.277 | 0.93 | 0.023 | 0.299 | 0.317 |
| 2 | 1.07 | 0.20 | 0.0 | 0.0 | 0.0 | 0.0 | 0.370 | 0.322 |
| 3 | 1.07 | 0.20 | 0.0 | 0.0 | 0.0 | 0.0 | 0.690 | 0.210 |
| 4 | 0.50 | 0.20 | 0.0 | 0.0 | 0.0 | 0.0 | 0.815 | 0.130 |
| 5 | 1.926 | 0.25 | 0.0 | 0.0 | 0.0 | 0.0 | 0.10 | 0.01 |
| 6 | 1.034 | 0.25 | 0.0 | 0.0 | 0.0 | 0.0 | 0.0 | 0.01 |

(a) Note: Reciprocal viewfactors are calculated within the code based on area ratios

TABLE 7.5. Heat Transfer Surfaces for Radiation Exchange Factor Groups

| Radiation Exchange Factor Group Number | Viewfactor Source | Group Surface Number | Corresponding Solid Surface Node Numbers for Assembly: A1 | A2 | A3 | A4 | A5 | A6 |
|---|---|---|---|---|---|---|---|---|
| 1 | I/O unit 10 | 1 | 3 | 11 | | | | |
| | | 2 | 4 | 12 | | | | |
| | | 3 | 7 | 16 | | | | |
| | | 4 | 9 | 18 | | | | |
| | | 5 | 12 | 21 | | | | |
| | | 6 | 11 | 20 | | | | |
| | | 7 | 8 | 17 | | | | |
| | | 8 | 6 | 15 | | | | |
| -1 | user-input | 1 | | | 1 | | | 23 |
| | | 2 | | | 3 | | | 20 |
| | | 3 | | | 4 | | | 21 |
| | | 4 | | | 5 | | | 22 |
| | | 5 | | | 25 | | | 27 |
| | | 6 | | | 24 | | | 28 |
| -2 | user-input | 1 | | | | 14 | 14 | |
| | | 2 | | | | 9 | 16 | |
| | | 3 | | | | 7 | 18 | |
| | | 4 | | | | 5 | 22 | |
| | | 5 | | | | 25 | 27 | |
| | | 6 | | | | 26 | 26 | |

from the upper plenum to the ambient boundary temperature. These connections are shown for the cask side and lid in Figure 7.3.

The thirteen boundary connection types required to model the heat transfer paths shown in Figure 7.3 are listed in Table 7.6. The side boundary connection types model heat transfer from the stainless steel shell to the neutron shield, through the water to the cask wall, and through the cask wall to the atmosphere. The axial boundary types model heat transfer through the cask lid. These are essentially conduction paths, with some contribution of convection possible in the water and on the vertical side of the cask. The ambient temperature for this problem was assumed to be 125°F.

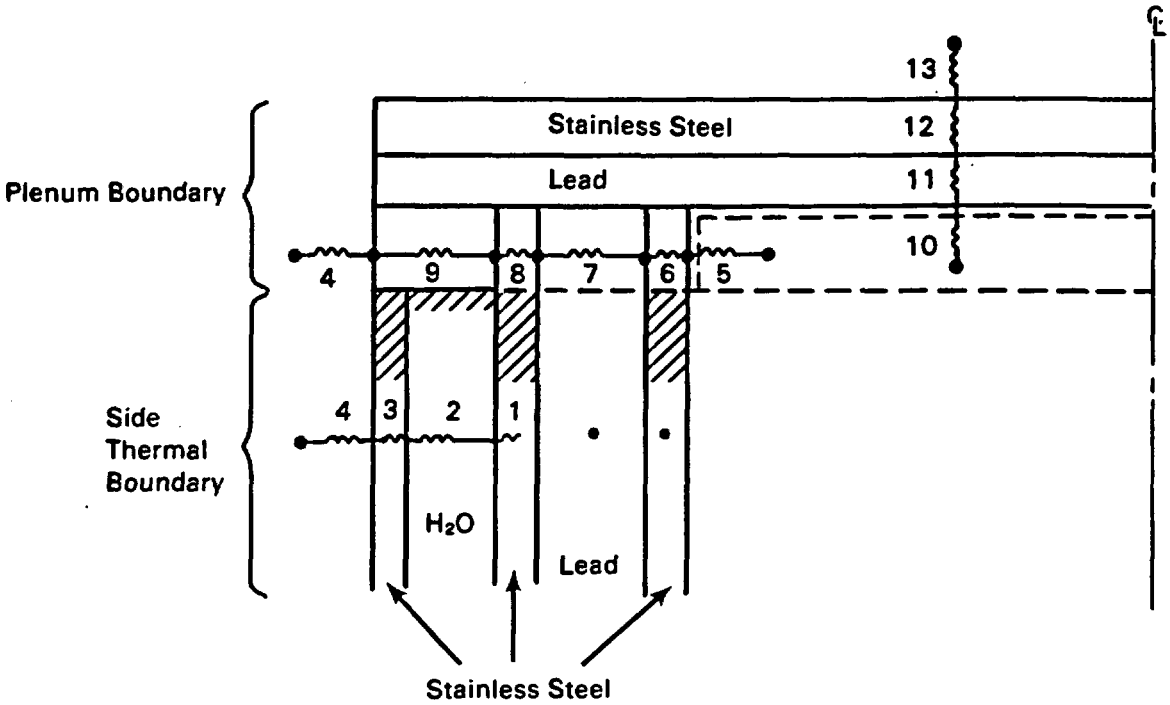


FIGURE 7.3. Cask Plenum Heat Transfer Model

The nodes of the outer shell of the cask body are connected to the ambient conditions by the boundary connections listed in Table 7.7. Table 7.8 lists the wall connections for the axial and radial boundary connections in the upper plenum. The information in these tables is used to construct the input required for group BDRY.

The energy equation is solved in the boundary region using the various heat transfer coefficients supplied in the boundary types, and the material properties associated with each region. Within the cask, the energy equation is solved in the structural nodes and rods, and both momentum and energy are solved for the fluid in the channels. Heat transfer from the structure nodes and rods to the fluid is calculated using a heat transfer coefficient that is constant at 3.66 Btu/h-ft$^2$-°F. Axial friction losses for the momentum equation were calculated using wall friction factors of f = 100/Re for flow in the open

TABLE 7.6. Boundary Types for Sample Cask

| Boundary Type Number | Heat Transfer Correlation Coefficients C1 (Btu/s-in.$^2$-°F) | C2 (°F$^{-}$) | C3 | Description |
|---|---|---|---|---|
| 1 | 0.0022 | 0.0 | 0.0 | Conduction from the outer stainless steel shell of the cask body model to the water neutron shield |
| 2 | 5.13e-7 | 1.26e+7 | 0.28 | Conduction and convection through the water neutron shield |
| 3 | 0.0011 | 0.0 | 0.0 | Conduction through the stainless steel wall of the cask body |
| 4 | 1.44e-9 | 1.92e+7 | 0.333 | Conduction, convection and radiation to air at the cask outer surface |
| 5 | 0.0001 | 0.0 | 0.0 | Conduction and convection in the cask upper plenum to the inner steel shell |
| 6 | 0.00044 | 0.0 | 0.0 | Radial conduction through the inner steel shell |
| 7 | 0.00018 | 0.0 | 0.0 | Radial conduction through lead shielding |
| 8 | 0.0011 | 0.0 | 0.0 | Radial conduction through the outer steel shell of the cask body model |
| 9 | 0.0001 | 0.0 | 0.0 | Radial conduction through the stainless steel lip of the end cap |
| 10 | 0.00046 | 0.0 | 0.0 | Conduction and convection in the upper plenum to the inner surface of the cask lid |

TABLE 7.6. (contd)

| Boundary Type Number | Heat Transfer Correlation Coefficients C1 (Btu/s-in.$^2$-°F) | C2 (°F$^{-}$) | C3 | Description |
|---|---|---|---|---|
| 11 | 0.00022 | 0.0 | 0.0 | Conduction through the lead sheild in the cask lid |
| 12 | 0.00015 | 0.0 | 0.0 | Conduction through the steel plate of the cask lid |
| 13 | 2.90e-9 | 2.94e+6 | 0.333 | Conduction, convection and radiation to air on the top of the cask lid |

TABLE 7.7. Side Boundary Connections for Sample Cask

| Boundary Region | Connection Type | Perimeter/ node (inches) | Solid Node(s) Connected to Region | Description |
|---|---|---|---|---|
| 1 | 1 | 4.579 | 34,35,36,37,38 | outer shell |
| 2 | 2 | 7.436 | | neutron shield |
| 3 | 3 | 7.761 | | cask wall |
| 4 | 4 | 7.761 | | ambient |

TABLE 7.8. Axial and Radial Boundary Connections for Upper Plenum of Sample Cask

| Boundary Region | Connection Type | Radial Heat Transfer Area (in.$^2$) | Solid Node(s) Connected to Region | Axial Heat Transfer Area/Node (in.$^2$) | Axial Length for Heat Transfer (inches) | Description |
|---|---|---|---|---|---|---|
| Axial connections: | | | | | | |
| 1 | 5 | 12.8 | | | | upper plenum |
| 2 | 6 | 12.8 | 24,25,26,27,28 | 1.363 | 2.25 | inner shell |
| 3 | 7 | 12.8 | 29,30,31,32,33 | 9.169 | 2.25 | lead shield |
| 4 | 8 | 12.8 | 34,35,36,37,38 | 9.5467 | 2.25 | outer shell |
| 5 | 9 | 12.8 | | | | lip of end cap |
| 6 | 4 | 12.8 | | | | ambient |
| Radial connections: | | | | | | |
| 1 | 10 | | | 26.2 | | upper plenum |
| 2 | 11 | | | 26.2 | 2.0 | lead cap |
| 3 | 12 | | | 26.2 | 1.5 | steel cap |
| 4 | 13 | | | 26.2 | | ambient |

assemblies with rods (A1 and A2), and f = 64./Re for flow in the open assemblies without rods (A3 through A6). Turbulent exchange was neglected, but conduction in the fluid for the assemblies containing subchannels was included in the calculation. (These options are specified by input in group HEAT.)

### 7.1.2 Results for Sample Problem 1

The complete input for this sample problem is listed in Table 7.9. The output produced by COBRA-SFS for this case is included in Appendix E. The peak rod surface temperature is 462.0°F. The peak temperature in the aluminum basket is 215.3°F. The maximum outside surface temperature of the cask is 200.3°F.

## TABLE 7.9. Input for Sample Problem 1

```
 +50                                                                    cobr.1
   1          EXAMPLE PROBLEM  1 FOR COBRA-SFS                          cobr.1
prop    11    3                                                         prop.1
        0.      100.     133.9     .0154     .240     14.08     .0463
        0.      200.     157.9     .0174     .241     16.67     .0518
        0.      300.     182.1     .0193     .243     19.23     .0580
        0.      400.     206.5     .0212     .245     21.74     .0630
        0.      500.     231.1     .0231     .247     24.27     .0680
        0.      600.     256.0     .0250     .250     26.81     .0720
        0.      700.     281.1     .0268     .253     29.33     .0770
        0.      800.     306.7     .0286     .256     31.85     .0810
        0.      900.     332.5     .0303     .259     34.36     .0850
        0.     1000.     358.6     .0319     .262     36.90     .0889
        0.     2000.     617.2     .0471     .286     62.11     .1242
   1 alum        0.        0.      119.                                prop.3
   2 sstl        0.        0.       9.4
   3 lead        0.        0.      19.0
chan     6   12                                                         chan.1
    30.00        0.                                                     chan.2
   1    1    9                                                          chan.4
   1    1    0    0    1                                               chan.5
   1.42781.842.4422    2.4185.7250    4.4185.7250                      chan.6
   2.39361.624.8844    3.4185.7250    5.1770.7250
   3.42781.842.4422    6.4185.7250
   4.39361.624.8844    5.1770.7250    7.4185.7250
   5.29871.7691.769    6.1770.7250    8.1770.7250
   6.39361.624.8844    9.4185.7250
   7.42781.842.4422    8.4185.7250
   8.39361.624.8844    9.4185.7250
   9.42781.842.4422
   2    1    9                                                          chan.4
   1    1    0    0    1                                               chan.5
   3    2    1                                                          chan.4
   1    1    0    0    2                                               chan.5
   12.0866.790                                                          chan.6
   4    2    1                                                          chan.4
   1    1    0    0    2                                               chan.5
   5    2    1                                                          chan.4
   1    1    0    0    2                                               chan.5
   6    2    1                                                          chan.4
   1    1    0    0    2                                               chan.5
                                                                        chan.7
rods     1    1    1    0    0                                          rods.1
   1    1    4                                                          rods.2
   1 .563   1.    1  .25    2  .25    4  .25    5  .25                  rods.3
   2 .563   1.    2  .25    3  .25    5  .25    6  .25                  rods.3
   3 .563   1.    4  .25    5  .25    7  .25    8  .25                  rods.3
   4 .563   1.    5  .25    6  .25    8  .25    9  .25                  rods.3
```

TABLE 7.9. (contd)

```
   2   1   4                                                          rods.2
   3   0   0                                                          rods.2
   4   0   0                                                          rods.2
   5   0   0                                                          rods.2
   6   0   0                                                          rods.2
 1.0 1.0 1.0 .563 1.0 1.0 1.0 1.0 1.0 .563                            rods.4
slab  14  12  38                                                      slab.1
   1                    102.8                                         slab.2
   2                    47.50
   3                    64.74
   4                    47.50
   5                    95.00
   6                    129.5
   7                    51.40
   8                    2089.
   9                    99.60
  10                    273.2
  11                    8855.
  12                    504.     172.2  .20  .25  .25
  13                    252.     86.40  .20  .25  .50
  14                    66.24
   1   1.1488           2   2   1   24  12                            slab.3
   2   1.1250           2   3   2   6   5
   3   1.5350           1   4   3
   4   1.5350           1   5   4
   5   1.2500           1   7   4
   6   1.2675           1   8   6
   7   1.5350           1   9   3
   8   1.2675           1  10   5
   9   1.5350           1  13   4
  10   1.1250           2  11   2   15  5
  11   1.5350           1  12   3
  12   1.5350           1  13   4
  13   1.2500           2  14   7   16  4
  14   1.2975           1  26  13
  15   1.2675           1  17   6
  16   1.5350           1  18   3
  17   1.2675           1  19   5
  18   1.5350           1  22   4
  19   1.1250           2  20   2   23  1
  20   1.5350           1  21   3
  21   1.5350           1  22   4
  22   1.2500
  23   1.1488           1  28  12
  24   21.363           2  25   8   29  9
  25   21.363           2  26   8   30  9
  26   21.363           2  27   8   31  9
```

TABLE 7.9. (contd)

| | | | | | | | | | | | | | | |
|---|---|---|---|---|---|---|---|---|---|---|---|---|---|---|
| 27 | 21.363 | | | | 2 | 28 | 8 | 32 | 9 | | | | | |
| 28 | 21.363 | | | | 1 | 33 | 9 | | | | | | | |
| 29 | 39.169 | | | | 2 | 30 | 16 | 34 | 14 | | | | | |
| 30 | 39.169 | | | | 2 | 31 | 16 | 35 | 14 | | | | | |
| 31 | 39.169 | | | | 2 | 32 | 16 | 36 | 14 | | | | | |
| 32 | 39.169 | | | | 2 | 33 | 16 | 37 | 14 | | | | | |
| 33 | 39.169 | | | | 1 | 38 | 14 | | | | | | | |
| 34 | 2.5467 | | | | 1 | 35 | 11 | | | | | | | |
| 35 | 2.5467 | | | | 1 | 36 | 11 | | | | | | | |
| 36 | 2.5467 | | | | 1 | 37 | 11 | | | | | | | |
| 37 | 2.5467 | | | | 1 | 38 | 11 | | | | | | | |
| 38 | 2.5467 | | | | | | | | | | | | | |
| 1 | 11.16 | | .70 | | | | | | | | | | | slab.4 |
| 2 | 20.88 | | .37 | | | | | | | | | | | |
| 3 | 5.76 | | .70 | | | | | | | | | | | |
| 4 | 10.44 | | .37 | | | | | | | | | | | |
| 5 | 7.28 | | 1.07 | | | | | | | | | | | |
| 6 | 3.27 | | 1.19 | | | | | | | | | | | |
| 7 | 6.48 | | 1.19 | | | | | | | | | | | |
| 8 | 124.6 | | 1.034 | | | | | | | | | | | |
| 9 | 52.56 | | 1.926 | | | | | | | | | | | |
| 10 | 157.7 | | .642 | | | | | | | | | | | |
| 11 | 48.24 | | 2.320 | | | | | | | | | | | |
| 12 | 15.48 | | .500 | | | | | | | | | | | |
| 1 | 1 | 3 | 1 | 6 | | | | | | | | | | slab.5 |
| 3 | 3 | 1 | 1 | 1 | 1 | 2 | 2 | 3 | 1 | 5 | | | | |
| 4 | 3 | 1 | 2 | 2 | 1 | 3 | 1 | 3 | 1 | 5 | | | | |
| 5 | 2 | 3 | 1 | 12 | 4 | 1 | 12 | | | | | | | |
| 6 | 2 | 1 | 1 | 3 | 1 | 4 | 4 | | | | | | | |
| 7 | 3 | 1 | 3 | 1 | 1 | 6 | 2 | 4 | 1 | 5 | | | | |
| 8 | 2 | 1 | 4 | 4 | 1 | 7 | 3 | | | | | | | |
| 9 | 3 | 1 | 6 | 2 | 1 | 9 | 1 | 4 | 1 | 5 | | | | |
| 11 | 4 | 1 | 7 | 1 | 1 | 8 | 2 | 2 | 1 | 1 | 2 | 2 | 2 | |
| 12 | 4 | 1 | 8 | 2 | 1 | 9 | 1 | 2 | 2 | 2 | 2 | 3 | 1 | |
| 14 | 2 | 4 | 1 | 7 | 5 | 1 | 7 | | | | | | | |
| 15 | 2 | 2 | 1 | 3 | 2 | 4 | 4 | | | | | | | |
| 16 | 3 | 2 | 3 | 1 | 2 | 6 | 2 | 5 | 1 | 5 | | | | |
| 17 | 2 | 2 | 4 | 4 | 2 | 7 | 3 | | | | | | | |
| 18 | 3 | 2 | 6 | 2 | 2 | 9 | 1 | 5 | 1 | 5 | | | | |
| 20 | 3 | 2 | 7 | 1 | 2 | 8 | 2 | 6 | 1 | 5 | | | | |
| 21 | 3 | 2 | 8 | 2 | 2 | 9 | 1 | 6 | 1 | 5 | | | | |
| 22 | 2 | 5 | 1 | 12 | 6 | 1 | 12 | | | | | | | |
| 23 | 1 | 6 | 1 | 6 | | | | | | | | | | |
| 24 | 1 | 3 | 1 | 11 | | | | | | | | | | |
| 25 | 2 | 3 | 1 | 10 | 4 | 1 | 9 | | | | | | | |
| 26 | 2 | 4 | 1 | 8 | 5 | 1 | 8 | | | | | | | |
| 27 | 2 | 5 | 1 | 9 | 6 | 1 | 10 | | | | | | | |

TABLE 7.9. (contd)

```
  28    1    6    1   11

radg    6    1    2                                                    radg.1
   1    6                                                             radg.2
   1 1.19  .20    1    0    2 .277    3 .093    4 .023    5 .053    6 .554   radg.3
   2 1.07  .20    1    0    2    0    3    0    4    0    5 .072    6  .62
   3 1.07  .20    1    0    2    0    3    0    4    0    5 .047    6  .05
   4 .500  .20    1    0    2    0    3    0    4    0    5 .750    6 .195
   5 .642  .25    1    0    2    0    3    0    4    0    5  .12    6  .00
   6 2.32  .25    1    0    2    0    3    0    4    0    5    0    6  .00
   2    6                                                             radg.2
   1 1.19  .20    1    0    2 .277    3 .093    4 .023    5 .290    6 .317   radg.3
   2 1.07  .20    1    0    2    0    3    0    4    0    5 .370    6 .322
   3 1.07  .20    1    0    2    0    3    0    4    0    5 .690    6  .21
   4 .500  .20    1    0    2    0    3    0    4    0    5 .815    6 .130
   51.926  .25    1    0    2    0    3    0    4    0    5  .01    6  .01
   61.034  .25    1    0    2    0    3    0    4    0    5    0    6  .01
   1    1    8    3    4    7    9   12   11    8    6
   2    1    8   11   12   16   18   21   20   17   15
   3   -1    6    1    3    4    5   25   24
   4   -2    6   14    9    7    5   25   26
   5   -2    6   14   15   18   22   27   26
   6   -1    6   23   20   21   22   27   28
heat    1    0    1                                                    heat.1
              3.66              3.66                                   heat.2
  1.0  1.0                                                             heat.4
drag    2                                                              drag.1
                       100.0 -1.0                                      drag.2
                        64.0 -1.0
bdry   13    1    5    1                                              bdry.1
   1     .0022                                                         bdry.2
   2  5.13e-7  1.26e+7       .28                                        bdry.2
   3     .0011                                                         bdry.2
   4  1.44e-9  1.92e+7      .333  .25                                      bdry.2
   5    .00011                                                         bdry.2
   6    .00044                                                         bdry.2
   7    .00018                                                         bdry.2
   8     .0011                                                         bdry.2
   9     .0001                                                         bdry.2
  10    .00048                                                         bdry.2
  11    .00022                                                         bdry.2
  12    .00015                                                         bdry.2
  13  2.90e-9  2.94e+6      .333  .25                                      bdry.2
   1    2  0.0 125.  1.0 125.                                          bdry.3
  34    44.579    1                                                    bdry.4
   11.0      1  1.0    1                                               bdry.5
   21.624    1  1.0    2                                               bdry.5
```

TABLE 7.9. (contd)

```
    31.695    1  1.0    3                                                  bdry.5
    41.695    1  1.0    4                                                  bdry.5
   35    44.579    1                                                       bdry.4
    11.0      1  1.0    1                                                  bdry.5
    21.624    1  1.0    2                                                  bdry.5
    31.695    1  1.0    3                                                  bdry.5
    41.695    1  1.0    4                                                  bdry.5
   36    44.579    1                                                       bdry.4
    11.0      1  1.0    1                                                  bdry.5
    21.624    1  1.0    2                                                  bdry.5
    31.695    1  1.0    3                                                  bdry.5
    41.695    1  1.0    4                                                  bdry.5
   37    44.579    1                                                       bdry.4
    11.0      1  1.0    1                                                  bdry.5
    21.624    1  1.0    2                                                  bdry.5
    31.695    1  1.0    3                                                  bdry.5
    41.695    1  1.0    4                                                  bdry.5
   38    44.579    1                                                       bdry.4
    11.0      1  1.0    1                                                  bdry.5
    21.624    1  1.0    2                                                  bdry.5
    31.695    1  1.0    3                                                  bdry.5
    41.695    1  1.0    4                                                  bdry.5
    2 12.0 26.2    0    4 125. 125.                                        bdry.6
    1  1.0    5                                                            bdry.7
    2  1.0    6    5   24    2     2.25   25    2     2.25   26    2     2.25bdry.7
                       27    2     2.25   28    2     2.25                 bdry.7
    3  1.0    7    5   29    3     2.25   30    3     2.25   31    3     2.25bdry.7
                       32    3     2.25   33    3     2.25                 bdry.7
    4  1.0    8    5   34    2     2.25   35    2     2.25   36    2     2.25bdry.7
                       37    2     2.25   38    3     2.25                 bdry.7
    5  1.0    9                                                            bdry.7
    6  1.0    4                                                            bdry.7
    1  1.0   10                                                            bdry.7
    2  1.0   11                                                            bdry.7
    3  1.0   12                                                            bdry.7
    4  1.0   13                                                            bdry.7
calc     1                                                                  calc.1
   0.                                                                       calc.2
       30                                                                   calc.8
oper     1    0    3                                                  1    oper.1
       0.     200.0      0.      .0198     200.0                            oper.2
    2                                                                       oper.16
   0.  1.0  1.0  1.0                                                        oper.17
outp     1                                                                  outp.1
endd
```

## 7.2 SAMPLE PROBLEM 2: THERMAL ANALYSIS OF A TEST LOOP MODULE

This sample problem is based on a design of a Fast Flux Test Facility (FFTF) test assembly that uses lithium as a coolant in a natural convection mode. The test assembly consisted of a 19-pin fuel bundle in a sealed container inside a concentric housing that could be inserted into a hexagonal channel in the FFTF core. Figure 7.4 shows an axial view of the test section, and illustrates the main paths for natural circulation of the lithium coolant. Figure 7.5 shows a half-section of symmetry of a cross section of the test assembly at the midplane of the fuel bundle.

As shown in Figure 7.5, the outer-most wall of the test section is cooled by forced convection of liquid sodium through the hexagonal channel. Within the test section, lithium is free to circulate by natural convection, up through the test section and down the annulus between the wall of the assembly and the inner can containing the fuel assembly. The inner can consists of two stainless steel shells with argon gas sealed in the gap between them. The wall of the test section also consists of two concentric shells, with helium gas sealed in the gap. There is also an annular gap containing stagnant liquid sodium in the wall of the test section.

Although this test section is not a spent fuel storage cask, it has many characteristics in common with such a system. The modes of heat transfer and the patterns of fluid flow are very similar to what is encountered in a cask, and the geometry is of the same basic configuration. COBRA-SFS can model this system without any modification to the code's input requirements or solution procedure.

### 7.2.1 COBRA-SFS Model of Test Assembly

The COBRA-SFS model consists of a half-section of symmetry that includes the test section out to the outermost wall, and extends axially from the bottom of the fuel bundle to the top of the inner shroud (refer to Figure 7.4). The regions above and below this segment of the test section are modeled as adiabatic boundaries, and it is assumed that any fluid leaving the central channel enters the annulus, and vice versa.

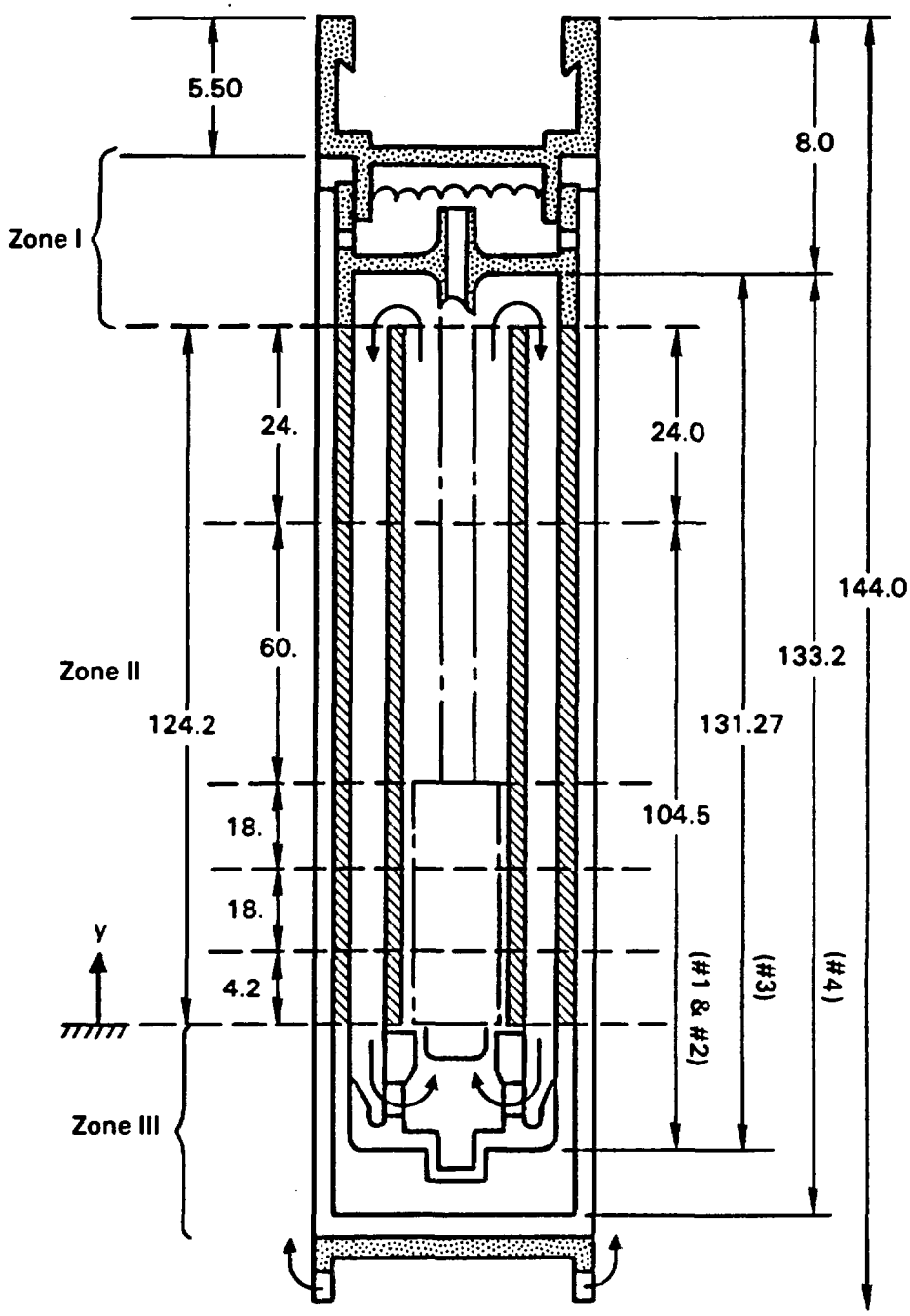


FIGURE 7.4. Axial Geometry of Test Loop Module

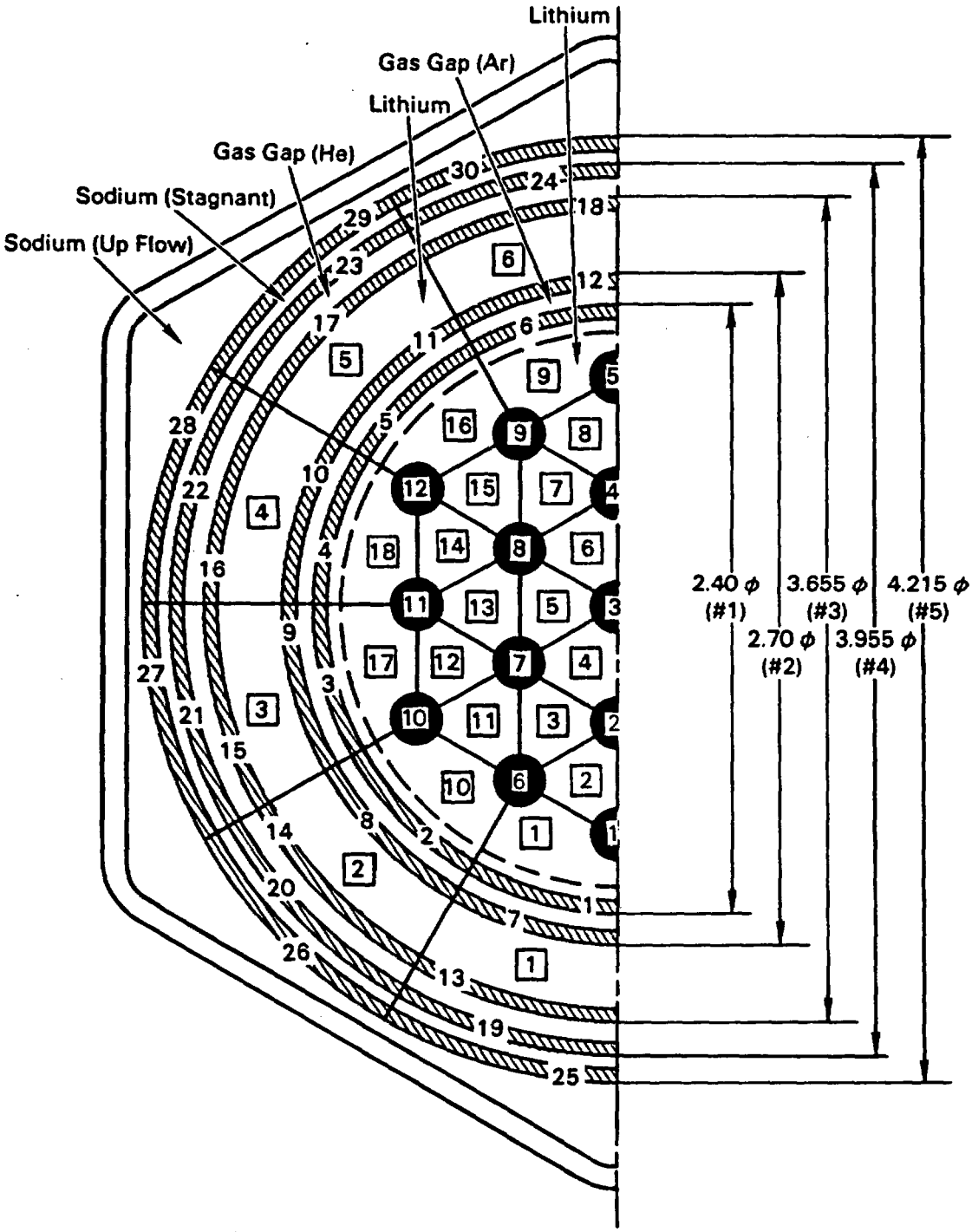


FIGURE 7.5. Cross Section of Fuel Assembly Region for Test Loop Module

The geometry of the system is based on the cross section of the test section through the fuel bundle. It is modeled with two assemblies, one for the region containing the fuel pins, and one for the downcomer annulus. Assembly 1 models the fuel bundle on a subchannel basis with 18 subchannels, and assembly 2 is divided into 6 channels. Table 7.10 summarizes the flow geometry for the channels, which is used to generate the input for group CHAN. The optional input group VARY was used to specify the axial variation in flow area over the length of the test section. Table 7.11 lists the variation functions used for channels in assembly 1. The nominal areas were based on flow areas in the fuel bundle.

TABLE 7.10. Flow Geometry for Test Section Model

| Assembly | Channel | Flow Area ($in.^2$) | Wetted Perimeter (inches) | Wetted Perimeter (inches) |
|---|---|---|---|---|
| 1 | 1,9,10,16,17,18 | 0.1605 | 1.048 | 0.4325 |
| 1 | 2-8,11-15 | 0.658 | 0.3707 | 0.3707 |
| 2 | 1-6 | 0.2748 | 1.72 | 0.0 |

The fuel rods were modeled with the radial heat generation distribution shown in Table 7.12. The diameter for each rod was 0.236 in. and the rod pitch was 0.450 in. The conduction model for the fuel rods included the clad only. With this option, the rod is treated as a heat source, and the energy equation is solved in the clad only, to yield a surface temperature for the specified rod heat generation. The overall length of the rods was 40.2 in., with an active fuel length of 18 in. and an average heat generation rate of 7 kW/ft.

The solid structure of the test section was modeled using the noding illustrated in Figure 7.5 for the bundle cross section. Thirty nodes were used; twelve for the inner wall and eighteen for the outer wall. The

TABLE 7.11. Axial Variation of Flow Geometry in Assembly 1

Flow Area Variations:

| Relative Axial Location | Area Variation (Relative to Nominal) For Triangular Channels | For Peripheral Channels | For Center Channels(4,5,6) |
|---|---|---|---|
| 0.0 | 1.0 | 1.0 | 1.0 |
| 0.320 | 1.0 | 1.0 | 1.0 |
| 0.330 | 1.333 | 1.333 | 1.015 |
| 1.0 | 1.333 | 1.333 | 1.015 |

Lateral Flow Connection Width Variations:

| Relative Axial Location | Width Variation (Relative to Nominal) For Connections Between Triangular Channels | For Connections Between Peripheral Channels | For Connections Between Center Channels |
|---|---|---|---|
| 0.0 | 1.0 | 1.0 | 1.0 |
| 0.320 | 1.0 | 1.0 | 1.0 |
| 0.330 | 2.103 | 1.66 | 1.136 |
| 1.0 | 2.103 | 1.66 | 1.136 |

interconnections among the solid nodes were described with eight solid-to-solid connection types, and the heat transfer from the fluid to the solid nodes required three connection types. The solid-to-solid connection types are described in Table 7.13, and the solid-to-fluid connections types are given in Table 7.14.

The boundary condition options in COBRA-SFS were used to define the boundary condition on the sides of the test section; the top and bottom of the system were assumed adiabatic. The side boundary was specified using a boundary connection type that modeled convection heat transfer to liquid sodium flowing on the outside of the

TABLE 7.12. Radial Heat Generation Distribution for Sample Problem 2

| Rod Number | Heating Rate Factor |
|---|---|
| 1 | 1.05 |
| 2 | 1.025 |
| 3 | 1.00 |
| 4 | 0.975 |
| 5 | 0.950 |
| 6 | 1.038 |
| 7 | 1.013 |
| 8 | 0.987 |
| 9 | 0.962 |
| 10 | 1.025 |
| 11 | 1.00 |
| 12 | 0.975 |

test section. The boundary type was specified with C1 = 0.008 Btu/s-in.$^2$-°F, C2 = C3 = 0.0, and C4 = 1.0.

Heat transfer to the fluid was calculated using a heat transfer coefficient of 15.0 Btu/h-ft$^2$-°F in the channels of assembly 1, and 8.45 Btu/h-ft$^2$-°F in the channels of assembly 2. Friction losses due to wall drag were calculated using f = 66/Re in assembly 1, and f = 88/Re in assembly 2. Radial conduction in the fluid was included in the solution of the energy equation, but turbulent momentum exchange was neglected.

TABLE 7.13. Solid-to-Solid Connection Types for Sample Problem 2

| Connection Type Number | Thermal Resistance of Material in the Connection $(Btu/s\text{-}ft\text{-}^{o}F)^{-1}$ | Gap in Connection: Thermal Resistance of Gap $(Btu/s\text{-}ft\text{-}^{o}F)$ | Gap in Connection: Emissivity in Gap: Surface1 | Gap in Connection: Emissivity in Gap: Surface2 | Gap in Connection: Gap Area$(in.^2)$ | Description |
|---|---|---|---|---|---|---|
| 1 | 1286 | -- | -- | -- | -- | circumferential connections of inner shell of inner wall |
| 2 | 7.85 | 22,930 | 0.30 | 0.30 | 0.628 | argon gas gap |
| 3 | 1445 | -- | -- | -- | -- | circumferential connections of outer shell of inner wall |
| 4 | 1977 | -- | -- | -- | -- | circumferential connections of inner shell of outer wall |
| 5 | 5.28 | 1600 | 0.30 | 0.30 | 0.983 | Helium gas gap |
| 6 | 2138 | -- | -- | -- | -- | circumferential connections of center shell of outer wall |
| 7 | 12.67 | 6.2 | -- | -- | 1.075 | stagnant sodium |
| 8 | 9538 | -- | -- | -- | -- | circumferential connections of outer shell of outer wall |

TABLE 7.14. Solid-to-Fluid Connection Types for Sample Problem 2

| Connection Type Number | Thermal Resistance Btu/s-ft-°F)$^{-1}$ | Perimeter (inches) | Connection(s) (Channel (Assembly)→Node) | Description |
|---|---|---|---|---|
| 1 | 3.68 | 0.707 | 1(2)→7<br>2(2)→8<br>3(2)→9<br>4(2)→10<br>5(2)→11<br>6(2)→12 | annulus to outer shell of inner wall |
| 2 | 2.80 | 0.931 | 1(2)→13<br>2(2)→14<br>3(2)→15<br>4(2)→16<br>5(2)→17<br>6(2)→18 | annulus to inner shell of outer wall |
| 3 | 4.33 | 0.602 | 1(1)→1<br>10(1)→2<br>17(1)→3<br>18(1)→4<br>16(1)→5<br>9(1)→6 | peripheral subchannels to inner wall |

### 7.2.2 Results for Sample Problem 2

The complete input for this sample problem is listed in Table 7.15. The output produced for this case by COBRA-SFS is included in Appendix F.

## TABLE 7.15. Input for Sample Problem 2

```
 +100                                                                    cobr.1
   2          EXAMPLE PROBLEM  2 FOR COBRA-SFS                           cobr.2
prop     2    5                                                          prop.1
       0.      400.      399.      25.5      .998      .032      .87      prop.2
       0.     4000.     4599.      45.0      .998      .092      .35
   1 zirk      0.0       0.0      34.8                                   prop.3
   2 sstl      0.0       0.0       8.1
   3 helm      0.0       0.0      .200
   4 sodm      0.0       0.0      43.8
   5 argn      0.0       0.0      .025
chan     2   18    5                                                     chan.1
    124.2        0.                                                      chan.2
   2  2.1    4  4.5    4  4.5    3  8.0    5  12.                        chan.3
   1    1   18                                                           chan.4
   1    1    0    0    1                                                 chan.5
   1.16051.048.4325    2.2140.2476   10.1776.5013                       chan.7
   2.0658.3707.3707    3.2140.2598
   3.0658.3707.3707    4.2140.2598   11.2140.2598
   4.0658.3707.3707    5.2140.2598
   5.0658.3707.3707    6.2140.2598   13.2140.2598
   6.0658.3707.3707    7.2140.2598
   7.0658.3707.3707    8.2140.2598   15.2140.2598
   8.0658.3707.3707    9.2140.2476
   9.16051.048.4325   10.1776.5013
  10.16051.048.4325   11.2140.2476   17.0570.5013
  11.0658.3707.3707   12.2140.2598
  12.0658.3707.3707   13.2140.2598   17.2140.2476
  13.0658.3707.3707   14.2140.2598
  14.0658.3707.3707   15.2140.2598   18.2140.2476
  15.0658.3707.3707   16.2140.2476
  16.16051.048.4325   18.0570.5013
  17.16051.048.4325   18.1776.5013
  18.16051.048.4325                                                      chan.4
   2    2    6                                                           chan.5
   1    2    0    0    2                                                 chan.7
   1.2748 1.72         2.4275.8188
   2.2748 1.72         3.4275.8188
   3.2748 1.72         4.4275.8188
   4.2748 1.72         5.4275.8188
   5.2748 1.72         6.4275.8188
   6.2748 1.72                                                           chan.8
vary    18    4    1   24    4                                           vary.1
  0.0 .320 .330  1.0                                                     vary.2
    1    1                                                               vary.3ΔΔ
  1.0  1.01.1591.159                                                     vary.4
    1    2
```

TABLE 7.15. (contd)

```
1.0  1.01.3331.333
  1    3
1.0  1.01.3331.333
  1    4
1.0  1.01.0151.015
  1    5
1.0  1.01.0151.015
  1    6
1.0  1.01.0151.015
  1    7
1.0  1.01.3331.333
  1    8
1.0  1.01.3331.333
  1    9
1.0  1.01.1591.159
  1   10
1.0  1.01.1591.159
  1   11
1.0  1.01.3331.333
  1   12
1.0  1.01.3331.333
  1   13
1.0  1.01.3331.333
  1   14
1.0  1.01.3331.333
  1   15
1.0  1.01.3331.333
  1   16
1.0  1.01.1591.159
  1   17
1.0  1.01.1591.159
  1   18
1.0  1.01.1591.159
0.0 .320 .330  1.0                                   vary.5
  1    1                                             vary.6
1.0  1.02.1032.103                                   vary.7
  1    2
1.0  1.0 1.66 1.66
  1    3
1.0  1.02.1032.103
  1    4
1.0  1.02.1032.103
  1    5
1.0  1.02.1032.103
  1    6
1.0  1.01.1361.136
  1    7
```

TABLE 7.15. (contd)

```
  1.0  1.02.1032.103
    1    8
  1.0  1.01.1361.136
    1    9
  1.0  1.02.1032.103
    1   10
  1.0  1.02.1032.103
    1   11
  1.0  1.02.1032.103
    1   12
  1.0  1.02.1032.103
    1   13
  1.0  1.0 1.66 1.66
    1   14
  1.0  1.02.1032.103
    1   15
  1.0  1.0 4.38 4.38
    1   16
  1.0  1.02.1032.103
    1   17
  1.0  1.02.1032.103
    1   18
  1.0  1.02.1032.103
    1   19
  1.0  1.02.1032.103
    1   20
  1.0  1.02.1032.103
    1   21
  1.0  1.02.1032.103
    1   22
  1.0  1.02.1032.103
    1   23
  1.0  1.0 4.38 4.38
    1   24
  1.0  1.0 1.66 1.66
rods    1    1    1    0    0                                          rods.1
   1    1   12                                                         rods.2
   1 .236 1.05    1  .33    2 .167                                     rods.3
   2 .2361.025    2 .167    3 .167    4 .167
   3 .236 1.00    4 .167    5 .167    6 .167
   4 .236 .975    6 .167    7 .167    8 .167
   5 .236 .950    8 .167    9 .330
   6 .2361.038    1 .250    2 .167    3 .167   10 .250   11 .167
   7 .2361.013    3 .167    4 .167    5 .167   11 .167   12 .167   13 .167
   8 .236 .987    5 .167    6 .167    7 .167   13 .167   14 .167   15 .167
   9 .236 .962    7 .167    8 .167    9 .250   15 .167   16 .250
  10 .2361.025   10 .333   11 .167   12 .167   17 .333
```

TABLE 7.15. (contd)

```
   11 .236 1.00   12 .167   13 .167   14 .167   17 .250   18 .250
   12 .236 .975   14 .167   15 .167   16 .833   18 .833
    2   0   0                                                          rods.2
  1.0 1.0 1.0 .236 1.0 1.0 1.0 1.0 1.0 .236                             rods.4
slab    6   3  30                                                       slab.1
    1                        1286.                                      slab.2
    2                         7.85    22930.  .30  .30 .628
    3                        1445.
    4                        1977.
    5                         5.28     1600.  .30  .30 .983
    6                        2138.
    7                        12.67      6.20         1.075
    8                        9538.
    1   1.0308             2   2   1   7   2                           slab.3
    2   1.0308             2   3   1   8   2
    3   1.0308             2   4   1   9   2
    4   1.0308             2   5   1  10   2
    5   1.0308             2   6   1  11   2
    6   1.0308             1  12   2
    7   1.0347             1   8   3
    8   1.0347             1   9   3
    9   1.0347             1  10   3
   10   1.0347             1  11   3
   11   1.0347             1  12   3
   12   1.0347
   13   1.0472             2  14   4  19   5
   14   1.0472             2  15   4  20   5
   15   1.0472             2  16   4  21   5
   16   1.0472             2  17   4  22   5
   17   1.0472             2  18   4  23   5
   18   1.0472             1  24   5
   19   1.0511             2  20   6  25   7
   20   1.0511             2  21   6  26   7
   21   1.0511             2  22   6  27   7
   22   1.0511             2  23   6  28   7
   23   1.0511             2  24   6  29   7
   24   1.0511             1  30   7
   25   2.0545             1  26   8
   26   2.0545             1  27   8
   27   2.0545             1  28   8
   28   2.0545             1  29   8
   29   2.0545             1  30   8
   30   2.0545
    1     3.68      .707                                               slab.4
    2     2.00      .931
    3     4.33      .602
    1   1   1   1   3                                                  slab.5
```

TABLE 7.15. (contd)

```
   2    1    1   10    3
   3    1    1   17    3
   4    1    1   18    3
   5    1    1   16    3
   6    1    1    9    3
   7    1    2    1    1
   8    1    2    2    1
   9    1    2    3    1
  10    1    2    4    1
  11    1    2    5    1
  12    1    2    6    1
  13    1    2    1    2
  14    1    2    2    2
  15    1    2    3    2
  16    1    2    4    2
  17    1    2    5    2
  18    1    2    6    2

heat    2    0    1                                                  heat.1
   0    0    0                  15.0                                heat.2
   0    0    0                  8.45
 1.0  1.0                                                             heat.4
drag    2                                                             drag.1
                         66. -1.0                                    drag.2
                         88. -1.0
bdry    1    1    6   0                                              bdry.1
   1 .000                                                            bdry.2
   1    5  0.0 600.  .25 710.  .50 740.  .75 770.  1.0 800.           bdry.3
  25    11.104    1
   11.104    1  1.0    1                                             bdry.5
  26    11.104    1
   11.104    1  1.0    1
  27    11.104    1
   11.104    1  1.0    1
  28    11.104    1
   11.104    1  1.0    1
  29    11.104    1
   11.104    1  1.0    1
  30    11.104    1
   11.104    1  1.0    1
calc    0                                                             calc.1
  0.                                                                  calc.2
      30                                                              calc.8
```

TABLE 7.15. (contd)

```
oper     1    0    3                                                  1     oper.1
       0.0    1500.0      .100      39.3    1680.0                          oper.2
    6                                                                        oper.16
   0.  0.0 .033  0.0 .034  1.0.1790  1.0.1792  0.0  1.0  0.0               oper.17
outp     1                                                                  outp.1
endd
```

# 8.0 REFERENCES


Catton, I. 1978. "Natural Convection in Enclosures." In Proceedings, Sixth International Heat Transfer Conference, Vol. 6, pp. 13-31.

Cuta, J. M. and J. M. Creer. 1986. "Comparisons of COBRA-SFS Calculations to Data from Electrically Heated Test Sections Simulating Unconsolidated and Consolidated BWR Spent Fuel," EPRI-NP-4593, Electric Power Research Institute, Palo Alto, California.

George, T. L., et al. 1980. COBRA-WC: A Version of COBRA for Single-Phase Multiassembly Thermal-Hydraulic Transient Analysis. PNL-2359, Pacific Northwest Laboratory, Richland, Washington.

Kays, W. M. and M. E. Crawford. 1980. Convective Heat and Mass Transfer, McGraw-Hill, Inc., New York.

Lombardo, N. J., et al. 1986. COBRA-SFS Spent Fuel Storage Thermal-Hydraulic Analysis Computer Program: Volume III - Validation Assessments. PNL-6049, Pacific Northwest Laboratory, Richland, Washington.

Rector, D. R., R. A. McCann, U. P. Jenquin, C. M. Heeb, J. M. Creer, and C. L. Wheeler. 1986. CASTOR-1C Spent Fuel Storage Cask Decay Heat, Heat Transfer, and Shielding Analysis. PNL-5974, Pacific Northwest Laboratory, Richland, Washington.

Rector, D. R., C. L. Wheeler, and N. J. Lombardo. 1986. COBRA-SFS Spent Fuel Storage Thermal-Hydraulic Analysis Computer Program: Volume I - Mathematical Models and Numerical Methods. PNL-6049, Pacific Northwest Laboratory, Richland, Washington.

Rector, D. R., J. M. Cuta, and N. J. Lombardo. 1986. COBRA-SFS Thermal-Hydraulic Analysis of the CASTOR-1C and REA 2023 BWR Storage Casks Containing Consolidated Spent Fuel. PNL-5802, Pacific Northwest Laboratory, Richland, Washington.

Rowe, D. S. 1973. COBRA-III C: A Digital Computer Program for Steady-State and Transient Thermal Hydraulic Analysis of Rod Bundle Nuclear Fuel Elements. BNWL-1695, Pacific Northwest Laboratory, Richland, Washington.

Sparrow, E. M. and A. L. Loeffler, Jr. 1959. "Longitudinal Laminar Flow Between Cylinders Arranged in Regular Array", AIChE Journal, Vol. 5, No. 3, pp. 325-330.

Stewart, C. W., et al. 1977. COBRA-IV: The Model and the Method. BNWL-2214, Pacific Northwest Laboratory, Richland, Washington.

Wheeler, C. L. et al. 1976. COBRA-IV-I: An Interim Version of COBRA for Thermal-Hydraulic Analysis of Rod Bundles, Nuclear Fuel Elements and Cores.

Wiles, L. E., et al. 1986. BWR Spent Fuel Storage Cask Performance Test: Volume II - Pre- and Post-Test Decay Heat, Heat Transfer, and Shielding Analyses. PNL-5777, Vol. II, Pacific Northwest Laboratory, Richland, Washington.

# APPENDIX A

## SUBROUTINE DESCRIPTIONS

# APPENDIX A

## SUBROUTINE DESCRIPTIONS

### Subroutine AREA (J, JX)

This subroutine calculates subchannel area, gap, and hydraulic diameter variations by using a tabular list of area and gap variations as a function of axial distance as input. Linear interpolation is used to select value from these tables. J and JX are the calculational level and the axial node, respectively. For nonrolled problems, J = JX. For rolled problems, J = 2. Subroutine AREA is called by subroutines RECIRC and SCHEME.

### Subroutine CLEAR

Subroutine CLEAR is used to selectively zero COMMON prior to execution. The size of any COMMON area to be zeroed is computed using the CDC and CRAY system routine LOCF. If the code is to be used on a system other than CDC, this routine may have to be changed to remove the calls to the LOCF routine. Subroutine CLEAR is called by the main program, COBRA.

### Program COBRA

The main program performs variables initialization either by setting the variable to zero or by calling the RESTRT routine that initializes variables to the values saved from a previous run. It also controls input and output via the subroutines SETUP and RESULT. The user specified solution option for the conservation equations is initiated with a call to RECIRC. The transient boundary conditions and forcing functions are set in COBRA at the beginning of each timestep.

### Subroutine COLOC (IA, ISYM, KK, RMIN, RMAX)

For the finite-difference fuel model, subroutine COLOC computes the fuel node geometric information necessary in REHEAT. Subroutine COLOC is called by subroutine SETIN.

Entry COPY (KEYS, LU, RECORD)

COPY is used to write data from variable array RECORD in computer memory to record KEYS of peripheral storage file LU. RECORD can correspond, through equivalencing, to the set of field variables at one of the three calculational levels in core, J-1, J, or J+1. Thus COPY, in conjunction with subroutine IMAGE can swap a recently calculated set of variables at calculational level J-1 that are in core with a set of previous iterate values at level J+2 from peripheral storage as the calculation level proceeds up the axial mesh.

Entry COPY is an entry point in subroutine IMAGE and is called by most of the major subroutines.

Subroutine Curve (FX, X, F, Y, N, ISAVE)

This subroutine performs linear interpolation of tabulated data. The variables in the argument list are defined as:

FX = quantity to be found
X = independent variable
F = input array of values of the dependent variable
Y = input array of values of the independent variable
N = number of F values in table
J = error signal
ISAVE = Table search switch. For ISAVE = 1, a complete table search on the independent variable is done. For ISAVE = 2, the location in the table which brackets the independent variable is known from a previous call to curve, and the table search is not performed.

Subroutine CURVE is called by all the major subroutines in COBRA-WC.

Subroutine DIFFER (IPART, J, JX)

Subroutine DIFFER is divided into four parts as indicated by the variable IPART.

Part 1 is called by subroutine RECIRC for each axial level at the beginning of the outer iteration loop. The fluid lateral conduction terms for the energy equation are determined based on previous iterate enthalpies. If the wall heat

transfer model is used, the overall wall-to-coolant heat transfer coefficient UWALL is determined.

Part 2 calculates the diversion crossflow resistance, Cij, and is called by subroutine MOMENT.

Part 3 calculates the irreversible pressure loss coefficient, DPK(I), due to friction and drag for the axial momentum equation. The other components of the pressure gradient are computed, with the exception of the diversion crossflow terms, and are designated as DPDX(I). Part 3 is called by subroutine SPLIT.

Part 4 calculates the irreversible pressure loss coefficient, DPK(I), due to friction and drag for the RECIRC formulation of the axial momentum equation. Part 4 is called by MOMENT.

Subroutine DUMPIT

This subroutine is used to store all labeled and blank COMMON on logical unit 8. This routine allows the user to save the current computed values, look at the results, and, then, if desired, continue the solution.

Subroutine DUMPIT is called by the main program, COBRA.

Subroutine ECHO (IPR, ICR, IFL)

Subroutine ECHO reads the COBRA-WC input from logical unit ICR and prints alphanumeric card images to logical unit IFL and the printer IPR. These printer card images can be used by the user to debug the input data deck. At the end of ECHO, logical unit IFL is rewound and is used as the input file for subroutine SETIN. Subroutine ECHO is called as an option by subroutine COBRA.

Subroutine ENERGY (J, JP1, JM1, JX)

Subroutine ENERGY sets up and solves the combined rod, solid structure, and coolant energy equations at axial level J using the method of successive overrelaxation to determine the coolant enthalpy distribution. The fluid energy equation coefficient matrix is designated as HAH and the source vector as DHDX. The solid structure energy equation coefficient matrix is designated UWAL and the source vector as WWAL. Subroutine ENERGY is called by subroutine RECIRC.

Subroutine EXPROP (J)

Subroutine EXPROP determines the average enthalpy, density, and viscosity in the plenum regions. These properties are used for flow re-entering the channel region. Subroutine EXPROP is called by subroutine ENERGY.

Subroutine FORCE (J, JX)

Subroutine FORCE sets up the arrays that contain flow blockage information. Subroutine FORCE is called by subroutine RECIRC.

Subroutine GROUP4 (ERROR)

Subroutine GROUP4 reads all group CHAN data cards and computes the necessary geometric parameters and coefficients while setting up the global numbering scheme used internally. Subroutine GROUP4 is called by subroutine SETIN.

Subroutine HOTROD (J)

HOTROD calculates the rod temperature field given a fluid energy solution. The updated cladding temperatures are then used in calculating the terms describing radiation heat transfer in the energy equations. Subroutine HOTROD is called by subroutine RECIRC.

Subroutine IMAGE (KEYS, LU, RECORD)

IMAGE is used to write data from record KEYS of peripheral storage file LU to the variable array RECORD in computer memory. RECORD can correspond, through equivalencing, to the set of field variables at one of the three calculational levels in core; J-1, J, or J+1. Thus IMAGE, when used in conjunction with entry COPY, can swap a recently calculated set of variables at calculational level J-1 that are in core with a set of previous iterate values at level J+2 from peripheral storage as the calculation level proceeds up the axial mesh. Subroutine IMAGE is called by most of the major subroutines.

Subroutine LIMITS (NUM, MIN, MAX, AVAR, APAR, GROUP, CARD, ERROR)

This routine is designed for use within subroutine SETIN to enhance the editing of input data. Its function is to guarantee that the number of values read into an array are within the dimensioned limits of the code. If not, the parameter NUM is changed only for the convenience of editing; however, the case

will be terminated after the input is edited. In addition, a limit of 25 accumulated errors are allowed, after which the editing will cease.

NUM = input parameter to be checked
MIN = minimum allowable value for NUM
MAX = maximum allowable value for NUM
AVAR = name of variable being checked
APAR = number of parameter representing the maximum limit
GROUP = card group identified for editing diagnostics
CARD = input card counter; for labeling which card may be in error
ERROR = alphanumeric flag for editing. If ERROR = "yes", the code will terminate following the editing of input.

Subroutine LOAD (X, Y, Z, MIN, MAX, LIMIT, STEP, IMAGE, CARD, LU)

LOAD is used to replace redundant logic within subroutine SETIN. It is designed to allow the loading of input data only after the following group card parameters have been verified.

X = first variable to be loaded (Step = 1)
Y = second variable to be loaded (Step = 2)
Z = third variable to be loaded (Step = 3)
STEP = the number of variables to be loaded sequentially. (1 STEP 3)
MIN = the maximum allowable sets of (X,Y,Z) which can be loaded
MAX = the number of sets of (X,Y,Z) the user attempts to load.

If (MAX > MIN), then a dummy read is used to account for remaining cards. This allows subsequent input to be edited.

LIMIT = the maximum number of data values per card which can be loaded via the formatted IMAGE
IMAGE = the variable FORMAT to be used for loading input data
CARD = input card counter for labeling which card may be in error
LU = input device used for reading input data.

Subroutine MIX (J)

MIX calculates the turbulent mixing parameter $W_T$, which is designated by WP(K). The various forms of user input correlations that are available are

described in Section 3.3.1.2 and the input instructions. Subroutine MIX is called by subroutine RECIRC.

Subroutine MOMENT (JX, J, JMI, JPI, IPART)

MOMENT calculates the tentative axial and lateral subchannel flow rates for a given pressure field at computational level J from the linearized momentum equations. The partial derivatives $\partial w/\partial P$ and $\partial m/\partial P$ are also calculated for use by RECIRC in the solution of the continuity and linearized momentum equations. Subroutine MOMENT is called by subroutine RECIRC.

Subroutine NETWORK (ITER)

When the pressure boundary condition network model is specified, subroutine NETWORK calculates the contribution by network orifice and head losses to the total specified problem pressure boundary condition. These losses are based on the latest assembly flow rates.

Subroutine NETWORK is called by subroutines RECIRC and RESULT.

Subroutine ONED (IPART)

ONED forms a one-dimensional approximation to the multidimensional continuity and momentum solution at a given level and solves it using direct inversion. Subroutine ONED is called by RECIRC.

Subroutine PREFIX

PREFIX is used to compute the constant fuel rod coefficients. The coefficients are used to implicitly link the fuel and coolant energy equations. PREFIX is called by RECIRC.

Subroutine PROP (IPART, J, JX, JMI, JPI)

PROP consists of two parts. The first part uses the fluid property table to build the physical property arrays stored in variable DATA. Part 2 calculates fluid properties, the friction factor, and the film coefficient for a given set of fluid conditions. Subroutine PROP is called by subroutines COBRA, RECIRC, SETIN and SPLIT.

Subroutine RECIRC (JUMP, ISTART, JUMPS)

RECIRC is the managing subroutine for the solution scheme. It calls the subroutines that solve the energy momentum and state equations while solving the continuity equation internally. JUMP is the flow convergence flag; ISTART is the starting iteration number; and JUMPS is the indicator for convergence on pressure drop boundary condition problems.

Subroutine REHEAT (J, JX)

REHEAT computes the heat-flux-dependent terms in the rod energy equation. These terms are used to implicitly link the fuel and coolant energy equations. The subroutine is divided into sections for the different types of fuel model. Subroutine REHEAT is called by subroutines RECIRC.

Subroutine RESTRT (NTSTRT, ISTART)

This routine initializes variables to the values that were saved by subroutine DUMPIT from a previous solution. The first function of RESTRT is to retrieve the previously saved solution and initialize COMMON to the stored values. Next, a RESTRT data card is read defining the type of restart desired. In addition to the restart data read, certain values from the previous solution dictate how the solution may be restarted. RESTART is called by subroutine COBRA.

Subroutine RESULT (NT)

All printing of the results is done by this subroutine. NT is the current time increment number.

Subroutine RESULT is called by subroutine COBRA.

Subroutine ROLLIT (J, JX, SAVEA1, SAVEA2, SAVEA3, NWR, NDXP1, LUO, LUI)

This subroutine is used in conjunction with the roll option to input and output temporary storage values of the axial dependent variables. J is the current calculation level, and JX is the physical axial level. The variables SAVEA1, SAVEA2, and SAVEA3 are vectors of length NWR, which are equivalenced to the axial dependent variables at the axial levels J-1, J, and J+1, respectively. NDXP1 and LUI are the number of axial nodes plus one, and the logical unit, respectively. ROLLIT calls subroutines IMAGE and COPY to

accomplish the actual data transfer. ROLLIT is called by subroutines SCHEME and RECIRC.

Subroutine SETIN (IGPERR, ERROR)

SETIN is used to input the COBRA-WC data, perform error checks, and initialize variables. Subroutine SETIN is called by subroutine SETUP.

Subroutine SETOUT

SETOUT prints out the input read in SETIN. Subroutine SETOUT is called by subroutine SETUP.

Subroutine SETUP

SETUP is the driver routine for the data input phase. It also performs some variable manipulation and initialization. Subroutine SETUP is called by the main program, COBRA.

Subroutine SOLVER

SOLVER performs a direct Gaussian elimination solution for banded matrices and is used in the WC solution of the momentum and continuity equations. Subroutine SOLVER is called by subroutine RECIRC and MOMENT.

Subroutine SPLIT (GIN)

SPLIT corrects the input flow by an extrapolation/interpolation iteration procedure until an equal pressure drop across the first node is found. The procedure assumes that no diversion crossflow occurs within the first node. Total bundle inlet flow is conserved. Subroutine SPLIT is called by subroutine SETIN.

Subroutine VARPRP (RC, K, TZ, NT, JX)

VARPRP calculates the fuel properties $\rho C_p/\Delta T$ and $k/\Delta R$ as a function of temperature for use with the finite-difference fuel model. Subroutine VARPRP is called by subroutine REHEAT.

# APPENDIX B

## VARIABLE DESCRIPTIONS

# APPENDIX B

## VARIABLE DESCRIPTIONS

| Variables | | Principal Definition | COMDECK |
|---|---|---|---|
| A(M1,ME) | Subchannel flow area ($ft^2$) | AREA | FIELDS |
| AA(LIW) | Coefficient for turbulent friction factor correlation | DRAG | DRAGS |
| AAD(IE,MC) | Coefficient matrix for the solution of banded matrices | SOLVER | FIELDS |
| AAL(LIW) | Coefficient for laminar friction factor correlation | DRAG | DRAGS |
| ABAR(MC) | Subchannel exit density ($lbm/ft^3$) | EXPROP | GEOM |
| AC(MC) | Subchannel nominal flow area ($in.^2$) | Group CHAN | GEOM |
| ACCELF | External acceleration factor for axial flowGroup | CALC | TIME |
| ACCELH | Internal acceleration factor for combined energy equation | Group CALC | TIME |
| ACCELW | Acceleration factor for slab energy equation | Group CALC | TIME |
| ACCELY | Internal acceleration factor for pressure solution | Group CALC | TIME |
| ACCRHO | Damping factor for change in fluid density | Group CALC | TIME |
| AFACT(ML,MA) | Relative subchannel area variation | Group VARY | GEOM |
| AHL1-AHL4(LIW) | Coefficients for laminar heat transfer coefficient equation | Group HEAT | DROPS |
| AH1-AHR(LIW) | Coefficients for turbulent heat transfer coefficient equation | Group HEAT | DROPS |
| ALLF | Total problem flow rate(lbm/sec) | NETWORK | DRAGS |
| AMIX(LIT) | Coefficient for turbulent mixing correlation | Group HEAT | DROPS |
| AN(MC) | Subchannel nominal flow area ($ft^2$) | SETIN | GEOM |
| APP(M1,ME) | Average of the area at the current node, J, and at the previous node, J-1 ($ft^2$) | AREA | FIELDS |
| ATOTAL | Summation of all subchannel flow areas ($ft^2$) | SETIN | GEOM |
| AXIAL(MP,MV) | Relative axial power distributions | GROUP3 | TIME |

| Variables | | Principal Definition | COMDECK |
|---|---|---|---|
| AXL(ML) | Relative axial location of channel area variations | Group VARY | GEOM |
| BB(LIW) | Coefficient for turbulent friction factor correlation | Group DRAG | DRAGS |
| BBL(LIW) | Coefficient for laminar friction factor correlation | Group DRAG | DRAGS |
| BMIX(LIT) | Coefficient for turbulent mixing correlation | Group HEAT | PROPS |
| BX(2,MN,MR) | Coefficient array for finite-difference fuel model | REHEAT | FUELS |
| CARD | Input data card counter | SETIN | |
| CC(LIW) | Coefficient for turbulent friction factor correlation | Group DRAG | DRAGS |
| CC(LIW) | Coefficient for turbulent friction factor correlation | Group DRAG | DRAGS |
| CCL(LIW) | Coefficient for laminar friction factor correlation | Group DRAG | DRAGS |
| CCLAD(MT) | Specific heat of the cladding material (Btu/lbm-$^{o}$F) | Group RODS | FUELS |
| CD(MK,MQ) | Channel loss coefficient | Group DRAG | DRAGS |
| CFUEL(MT) | Specific heat of fuel material (Btu/lbm-$^{o}$F) | Group RODS | FUELS |
| CIJ(MG) | Crossflow resistance | DIFFER | DRAGS |
| CON(MC) | Fluid thermal conductivity (Btu/hr-ft-$^{o}$F) | PROP | PROPS |
| CONK(MG) | Fluid lateral conduction term | DIFFER | FIELDS |
| CONLIQ(MP) | Property table fluid thermal conductivity entry (Btu/hr-ft-$^{o}$F) | Group PROPS | PROPS |
| CONS(MX) | Source vector for calculating average $\delta P$'s | ONED | FIELDS |
| CONSOL(ID) | Solid structure thermal conductivity (Btu/s-ft$^{o}$F) | Group PROP | PROPS |
| CONST(LIB) | Source vector for calculating axial flows | MOMENT | FIELDS |
| CP(MC) | Fluid specific heat (Btu/lbm-$^{o}$F) | PROP | PROPS |
| CPLIQ(MP) | Property table fluid specific heat entry (Btu/lbm-$^{o}$F) | Group PROP | PROPS |
| CPSOL(ID) | Solid structure specific heat (Btu/lbm-$^{o}$F) | Group PROP | PROPS |
| D(MR) | Rod diameter, DR/12 (ft) | SETIN | FUELS |
| DAMPNG | Damping factor on crossflow | Group CALC | TIME |

| Variables | | Principal Definition | COMDECK |
|---|---|---|---|
| DC(MC) | Subchannel hydraulic diameter, 4AC/PW (in.) | SETIN | GEOM |
| DELR(IL,IM1) | Distance from the surface of a finite-difference fuel node to the center of the node where the material properties are calculated | COLOC | FIELDS |
| DELRAD(MT) | The thickness of the finite-difference fuel node which is constant for a given fuel type | COLOC | FUELS |
| DD(LIW) | Coefficient for turbulent friction factor correlation | Group DRAG | DRAGS |
| DDD | Outside diameter of finite-difference fuel node i (ft) | COLOC | |
| DDUCT(IU,LIX) | Array which gives the flow separated regions within one assembly | SETIN | GEOM |
| DFDP(M1,ME) | $\partial F/\partial P$, derivative of axial flow with respect to pressure | Group MOMENT | FIELDS |
| DFDPD(MX) | Diagonal terms in tridiagonal matrix for solution of $\delta P$ | ONED | FIELDS |
| DFDPO(MX) | Off-diagonal terms in tridiagonal matrix for solution of $\delta P$ | ONED | FIELDS |
| DFDPR(IL,IM1) | Same as DFDP, used with the roll option | RECIRC | FIELDS |
| DFDX(IU) | | NETWORK | FIELDS |
| DFUEL(MT) | Diameter of the fuel pellet, (ft) | Group RODS | FUELS |
| DHDX(IU) | dH/dX, derivative of fluid enthalpy with respect to distance | ENERGY | FIELDS |
| DHYD(M1,ME) | Local subchannel hydraulic diameter (ft) | SETIN | FIELDS |
| DHYDN(MC) | Nominal hydraulic diameter (ft) | SETIN | GEOM |
| DIST(MC,4) | Transverse momentum control volume length, (in.) | Group CHAN | GEOM |
| DODR(MN,MT) | DDD/DELRAD | COLOC | FUELS |
| DPA(IU) | Static pressure drop ($lbf/ft^2$) or assembly pressure drop | Group OPER | DRAGS |
| DPDX(MC) | Axial pressure gradient ($lbf/ft^3$) | NETWORK | FIELDS |
| DPK(MC) | Losses due to friction and local loss coefficient | DIFFER | FIELDS |
| DPPRI(IU) | Old iterate value for bundle pressure drop ($lbf/in.^2$) | NETWORK | DRAGS |
| DPS | Desired total pressure drop ($lbf/in.^2$) | Group OPER | TIME |

| Variables | | Principal Definition | COMDECK |
|---|---|---|---|
| DPT(IU) | Desired bundle total pressure drop ($lbf/ft^2$) | NETWORK | DRAGS |
| DR(M6) | Rod diameter including cladding, (in.) | Group RODS | GEOM |
| DROD(MT) | Rod diameter including cladding for a particular material type, (in.) | Group RODS | FUELS |
| DSQR(MN,MT) | Finite-difference fuel node: ($OD^2$-$ID^2$) divided by four ($ft^2$) | COLOR | FUELS |
| DT | Nominal time step (sec) | Group CALC | TIME |
| DTGC | DT*GC | COBRA | GEOM |
| DTII(MG) | Temporary storage of channel IK(K) crossflow coefficients in momentum equation solution | MOMENT | FIELDS |
| DTIMP | Implicit time step | COBRA | TIME |
| DTJJ(MG) | Same as DTII for JK(K) | MOMENT | FIELDS |
| DTMAXE | Maximum allowable explicit time step | RECIRC | TIME |
| DWDP(M1,ME) | Change in crossflow with respect to pressure change | MOMENT | FIELDS |
| DWDPR(IN,IM1) | Same as DWDP, used with the roll option | RECIRC | FIELDS |
| DX(MX) | Axial node length for node J (ft) | Group CHAN | GEOM |
| EE(LIW) | Coefficient for turbulent friction factor correlation | Group DRAG | DRAGS |
| ELEV | Gravity, COS(THETA) | SETIN | GEOM |
| END1-END19 | Common block end points for determining common length | | |
| ERROR | Input data error flag | SETIN | |
| ETIME | Elapsed transient time (sec) | COBRA | TIME |
| F(M1,ME) | Subchannel local mass flow (lbm/sec) | RECIRC | FIELDS |
| FACTOR(MX,MX) | Relative height at which loss coefficient is to be applied | Group DRAG | DRAGS |
| FDIV(MG) | Flag for forced crossflow; FDIV=1.0, crossflow is forced | FORCE | DRAGS |
| FERROR | Flow convergence criteria | Group CALC | SPEC2 |
| FFLC(LMM,LIW) | Loss coefficient forcing function profile | Group DRAG | TIME |

| Variables | | Principal Definition | COMDECK |
|---|---|---|---|
| FFOLD(MC,2) | Old iterate value for subchannel inlet flow rate (lbm/sec) | RECIRC | DRAGS |
| FQ(LMM,LIW) | Forcing function for steady state flow or pressure drop at transient time, YQ | Group OPER | TIME |
| FH(LMM) | Forcing function for inlet enthalpy or temperature at transient time, YH | Group OPER | TIME |
| FHX(LMM) | Forcing function for steady state exit enthalpy at transient time, YHX | Group OPER | TIME |
| FINLET(MC) | Subchannel inlet flow (lbm/sec) | SETIN | FIELDS |
| FLO(IU) | Total assembly flow (lbm/sec) | NETWORK | DRAGS |
| FLOG(MJ) | Total group flow (lbm/sec) | NETWORK | DRAGS |
| FLOW(MC) | Sum crossflows to a particular channel (lbm/sec) | ENERGY | FIELDS |
| FOLD(M1,ME) | Mass flow from the previous time step (lbm/sec) | COBRA | FIELDS |
| FP(LMM) | Forcing function for steady state system pressure at transient time, YP | Group OPER | TIME |
| FPRI(IU) | Old iterate assembly pressure drop ($lbf/ft^2$) | NETWORK | DRAGS |
| FQ(LMM,LIW) | Forcing function for steady state heat flux at transient time, YQ | Group OPER | TIME |
| FR(IL,IM1) | Same as F, used with the roll option in subroutine RECIRC | RECIRC | FIELDS |
| FSP(MC) | Friction factor | PROP | FIELDS |
| FT(MP) | Maximum time step size at transient time, YT | Group CALC | TIME |
| FTEMP(MC) | Old iterate value of axial flow (lbm/sec) | MOMENT | FIELDS |
| FTM | Turbulent momentum parameter | Group CHAN | GEOM |
| FTOTAL | Specified total flow rate (lbm/s) | Group OPER | TIME |
| FV1(LA,LA)-FV6(LF,LF) | Graybody radiation exchange factors | Group RADG | WALLS |
| GAP(M1,ME) | Local gap spacing between adjacent channels (ft) | SETIN | FIELDS |
| GAPN(MG) | Nominal gap spacing, GAPS/12 (ft) | SETIN | GEOM |
| GAPS(MC,4) | Nominal gap spacing between adjacent channels (in.) | Group CHAN | GEOM |

| Variables | | Principal Definition | COMDECK |
|---|---|---|---|
| GAPXL(ML) | Relative axial locations of gap width variation | Group VARY | GEOM |
| GC | 32.2 lbm-ft/lbf-sec$^2$ | COBRA | GEOM |
| GEOMF(MT) | Fuel rod geometry indicator | Group RODS | FUELS |
| GFACT(ML,MS) | Relative gap width variation | Group VARY | GEOM |
| GIN | Bundle inlet mass flux (lbm/hr-ft$^2$) | Group OPER | TIME |
| GK(LIT) | Geometry factor for conduction | Group HEAT | GEOM |
| H(M1,ME) | Local subchannel enthalpy (Btu/lbm) | ENERGY | FIELDS |
| HAH(IE,MC) | Energy equation coefficient matrix | ENERGY | FIELDS |
| HAIN(IU) | Static head length associated with assembly inlet loss (in.) | Group CHAN | DRAGS |
| HAOUT(IU) | Static head length associated with assembly outlet loss (in.) | Group CHAN | DRAGS |
| HERROR | Energy equation allowable external convergence error | Group CALC | TIME |
| HEXIT(MC) | Enthalpy at the bundle exit (Btu/lbm) | COBRA | WALLS |
| HFILM(MC) | Heat transfer coefficient (Btu/hr-ft$^2$-$^o$F) | PROP | FIELDS |
| HGAP(MT) | Gap conductance coefficient between fuel and cladding (Btu/hr-ft$^2$-$^o$F) | Group RODS | FUELS |
| HGIN(MJ) | Static head length associated with group inlet loss (in.) | Group DRAG | DRAGS |
| HGOUT(MJ) | Static head length associated with group outlet loss (in.) | Group DRAG | DRAGS |
| HIN | Inlet enthalpy (Btu/lbm) or temperature ($^o$F) | Group OPER | TIME |
| HINLET(MC) | Subchannel inlet enthalpy (Btu/lbm) or temperature ($^o$F) | Group OPER | FIELDS |
| HLIQ(MP) | Property table fluid enthalpy entry (Btu/lbm) | Group PROP | PROPS |
| HOLD(M1,ME) | Local enthalpy at previous time step (Btu/lbm) | COBRA | FIELDS |
| HOUT | Problem exit enthalpy (Btu/lbm) | Group OPER | TIME |
| HPERIM(MC) | Heated perimeter, PH/12(ft) | SETIN | GEOM |
| HSURF(M1,ME) | Average rod surface heat transfer coefficient (Btu/hr-ft$^2$-$^o$F) | PROP | FIELDS |

| Variables | | Principal Definition | COMDECK |
|---|---|---|---|
| IBWL | Left matrix band width | SOLVER | GEOM |
| IBWR | Right matrix band width | SOLVER | GEOM |
| ICHAN(LNB,MC) | Storage array for the number of first- and second-order channel connections to a given channel | PREFIX | FIELDS |
| ICF(ND,MW) | Array identifying slab-to-channel connection types | Group SLAB | WALLS |
| ICON(MH,MW) | Array identifying slab-to-slab connection types | Group SLAB | WALLS |
| IDAREA(MC) | Identification number for a subchannel that has a area variations | SETIN | GEOM |
| IDFUEL(MR) | Rod type for property designation | Group RODS | FUELS |
| IDGAP(MG) | Identification number for a gap that has gap variations | SETIN | GEOM |
| IDTGC | 1/(DT*GC) | COBRA | GEOM |
| IDTYP(MT) | Flag for fuel shape and collocation order | SETIN | FUELS |
| IE | SPECSET parameter - width HAH matrix (two times the largest numerical difference between any two adjacent subchannel identification numbers plus 1) | SETIN | FUELS |
| IERROR | Error flag; if > 1, print error messages | COBRA | GEOM |
| IEXP | Flag to set implicit or explicit mode in RECIRC | COBRA RECIRC | GEOM |
| IFTYP(M1,ME) | Fuel type identifier | COBRA | FIELDS |
| IG | Option for specifying inlet mass flux | Group OPER | FIELDS |
| IHH | Option for specifying inlet enthalpy | Group OPER | TIME |
| IHALT | Maximum number of inner energy equation iterations at each level | SETIN | TIME |
| IHIGH | = IE | PREFIX | TIME |
| IK(MG) | Identifies subchannels adjacent to a gap when paired with JK | SETIN | GEOM |
| IKW(ND,MW) | Array identifying channels connected to a slab | Group SLAB | GEOM |
| ILOC(LNB) | Singly dimensioned ILOCS | SETIN | GEOM |

| Variables | | Principal Definition | COMDECK |
|---|---|---|---|
| ILOCS(LN1,MC) | Array to identify gaps and walls connected to subchannel I | SETIN | GEOM |
| ILOW | = MI+1 | PREFIX | TIME |
| ILOWP1 | = ILOW+1 | PREFIX | TIME |
| IM(MS) | Identifies subchannels on opposite sides of a gap with gap variations | SETIN | TIME |
| IMP(10) | Dummy variable used in printout of crossflow information | RESULT | TIME |
| IPOINT(IU,8) | For each assembly, identifies assembly type, first and last channel number, first and last gap number, and the first and last rod number | SETIN | FIELDS |
| IPRNTA | Flag specifying the assembly average exit value printout option | SETIN | TIME |
| IPRNTE | Flag specifying the subchannel exit value printout option | SETIN | TIME |
| IR | Dimension parameter - maximum number of rods interacting with a channel | | FIELDS |
| IROLL | Data storage option; if 1, the option is used | Group CALC | GEOM |
| ISCHEME | Solution option to be used | Group CALC | GEOM |
| ISTAR(MG) | Number of the donor channel for crossflow through gap K | DIFFER | PROPS |
| IT | Dimension parameter - maximum number of assembly types | RESRTR | FIELDS |
| ITERAT | Loop counter for the external iteration loop | RECIRC | GEOM |
| ITSAVE | Number of iterations per implicit time step the code is taking | RECIRC | GEOM |
| ITSTEP | Number of elements in variable maximum timestep table | Group CALC | TIME |
| ITYPIN(LIT,3) | For each assembly type, identifies first assembly number of that type, number of channels, and number of gaps | SETIN | FIELDS |
| IU | Dimension parameter - maximum number of assemblies | | SPEC19 |
| IV | Dimension parameter - maximum number of channels on an assembly face + 4 | | SPEC19 |
| IW | Dimension parameter - maximum number of loss coefficient forcing function profiles | | FIELDS |

| Variables | | Principal Definition | COMDECK |
|---|---|---|---|
| IWIDE | Matrix band width | | FIELDS |
| IZTYP(MT,MY) | Identification number of the fuel type in each fuel zone | Group RODS | FUELS |
| I2 | Logical unit for input, defaulted to 5 | COBRA | TIME |
| I3 | Logical unit for printout, defaulted to 6 | COBRA | TIME |
| I8 | Logical unit for restart dump input and output, defaulted to 8 | COBRA | TIME |
| JK(MG) | See IK | SETIN | GEOM |
| JLC(1) | Axial node number at which loss coefficient, FACTOR, is applied | SETUP | DRAGS |
| JM(MS) | See IM | | TIME |
| J | J = JX for nonroll problems. J = 2 (1/JX) for roll problems | RECIRC | |
| JMP(10) | See IMP | RESULT | TIME |
| JUMP | Solution convergence flag; if JUMP = 2, convergence is met | RECIRC | |
| JX | Axial node level | RECIRC | |
| J1 | Directs printout of input data | COBRA | GEOM |
| J6 | Flags wire wrap and loss coefficient options | GROUP7 | DRAGS |
| KCLAD(MT) | Thermal conductivity of cladding material (Btu/hr-ft-$^{o}$F) | Group RODS | FUELS |
| KFUEL(MT) | Thermal conductivity of fuel material (Btu/hr-ft-$^{o}$F) | Group RODS | FUELS |
| KIJ | Crossflow resistance coefficient | Group CHAN | DRAGS |
| KSIDE(IV,M11) | Slab corresponding to radiation group location | Group RADG | WALLS |
| KWAL(MH,MW) | Array identifying slabs connected to a slab | Group SLAB | WALLS |
| K10 | Option for pressure drop boundary condition transients | GROUP11 | TIME |
| LAMNF(LIW) | Flags when laminar friction factors are input | SETIN | DRAGS |
| LAMNH(LIW) | Flags when laminar heat transfer coefficients are input | SETIN | DRAGS |
| LC(MC,4) | Adjacent subchannel, LC(I,J), is the Jth subchannel adjacent to subchannel | Group CHAN | GEOM |

| Variables | | Principal Definition | COMDECK |
|---|---|---|---|
| LCASS(IU) | Indicates if loss coefficients are applied to a particular assembly | FORCED | DRAGS |
| LCFF(MK) | Loss coefficient forcing function number applied to a given loss coefficient | Group DRAG | DRAGS |
| LENGTH(MG) | Transverse momentum control volume length, (ft) | SETIN | GEOM |
| LR(MR,6) | Identification number of subchannel facing rod N | Group RODS | FUELS |
| LRI(IR,MC) | Identification number of rod facing channel I | PREFIX | FUELS |
| LUI | READ/WRITE device for roll option | COBRA | FIELDS |
| MA | Dimension parameter - maximum number of subchannels with area variation | | SPEC19 |
| MAXT | Maximum computer execution time allowable before dump | COBRA | DRAGS |
| MAXTYP | Total number of assembly types | SETIN | FIELDS |
| MC | Dimension parameter - maximum number of subchannels | | SPEC19 |
| ME | Dimension parameter - MX if no peripheral storage, three if roll option is used | | SPEC19 |
| MFLAG(MC) | Interpolation/extrapolation scheme indicator for equal flow split option | SPLIT | FIELDS |
| MG | Dimension parameter - maximum number of subchannel gap connections | | SPEC19 |
| MI | Dimension parameter - maximum number of thermal and flow connections to a channel | | SPEC19 |
| MJ | Dimension parameter - maximum number of assembly groupings | | SPEC19 |
| MK | Dimension parameter - maximum number of loss coefficients | | SPEC19 |
| ML | Dimension parameter - maximum number of axial locations for gap and area variations | | SPEC19 |
| MLEN | Length of I/O records when using the roll option with RECIRC | COBRA | FIELDS |
| MM | Dimension parameter - maximum number of points in the temporal profile | | FIELDS |

| Variables | | Principal Definition | COMDECK |
|---|---|---|---|
| MN | Dimension parameter - number of finite-difference fuel nodes plus two | | SPEC19 |
| MP | Dimension parameter - maximum number of entries in property table, and forcing function versus time table | | SPEC19 |
| MR | Dimension parameter - maximum number of fuel rods | | SPEC19 |
| MS | Dimension parameter - maximum number of gaps with gap variations | | SPEC19 |
| MT | Dimension parameter - maximum number of fuel types | | SPEC19 |
| MV | Dimension parameter - maximum number of heat flux profiles | | SPEC19 |
| MW | Dimension parameter - maximum number of solid structure nodes | | SPEC19 |
| MX | Dimension parameter - maximum number of axial nodes plus one | | SPEC19 |
| MY | Dimension parameter - maximum number of fuel type divisions | | SPEC19 |
| MZ | Dimension parameter - computed width of SAVEA1, SAVEA2, and SAVEA3 arrays | | SPEC19 |
| NAAA | Maximum width of AAA matrix | COBRA | GEOM |
| NAAAP1 | NAAA + 1 | COBRA | GEOM |
| NAAH | Maximum number of connections to a channel plus one | COBRA | GEOM |
| NAAHP1 | NAAH + 1 | COBRA | GEOM |
| NACH(MC) | Assembly number that channel I is a part of | SETIN | FIELDS |
| NAFACT | Total number of subchannel area variations | Group VARY | GEOM |
| NAFLX(IU) | Axial heat flux profile associated with assembly NASS | Group CHAN | TIME |
| NARAMP | Number of iterations for inserting area variations | Group VARY | GEOM |
| NASSEM | Total number of assemblies | Group CHAN | FIELDS |
| NAX | Number of entries in each axial heat flux table | GROUP3 | TIME |
| NAXL | Number of axial positions for subchannel area variations | Group VARY | GEOM |
| NAZONE | Number of axial zones for variable axial time step size | Group CHAN | |

| Variables | | Principal Definition | COMDECK |
|---|---|---|---|
| NC | Number of nodes in the fuel + 11 for the finite-difference method | Group RODS | FUELS |
| NCH(NA) | Global channel number for which area variation is specified | SETIN | GEOM |
| NCHANA | Number of channels in assembly type ITYPA | Group CHAN | FIELDS |
| NCHANL | Total number of channels | SETIN | FIELDS |
| NCHAN1 | First channel number in assembly NASS | SETIN | FIELDS |
| NCHAN2 | Last channel number in assembly NASS | SETIN | FIELDS |
| NCOUNT(MR) | Number of channels connected to rod N | PREFIX | TIME |
| NDT | Number of timesteps for transient | Group CALC | TIME |
| NDTP1 | NDT + 1 | SETIN | TIME |
| NDX | Number of axial nodes | Group CHAN | FIELDS |
| NDXP1 | NDX + 1 | Group CHAN | FIELDS |
| NETGRP(IU) | Assembly with grouping number to be used with assembly NASS during network option | Group CHAN | DRAGS |
| NETWK | Pressure boundary condition network model option | Group CHAN | DRAGS |
| NFLGC | Print flag for crossflow results | GROUP12 | TIME |
| NFLGR | Print flag for rod temperature results | Group OUTP | TIME |
| NFLGS | Print flag for subchannel results | Group OUT | TIME |
| NFLGW | Print flag for wall temperature results | Group OUTP | TIME |
| NFLMC(IU) | Heat transfer coefficient correlation number to be used with NASS | Group CHAN | PROPS |
| NFRICT | Total number of friction factor correlation sets | Group DRAG | DRAGS |
| NFUELT | Number of integrating points used in variable fuel property option | Group RODS | FUELS |
| NG | Number of entries in inlet mass flux or pressure drop transient forcing function table | Group OPER | TIME |
| NGAP(MS) | Gap number for which gap width variation occurs | Group VARY | GEOM |

| Variables | | Principal Definition | COMDECK |
|---|---|---|---|
| NGAPS | Total number of gaps for which gap variations occur | Group VARY | GEOM |
| NGAP1 | First gap number in assembly NASS | SETIN | FIELDS |
| NGAP2 | Last gap number in assembly NASS | SETIN | FIELDS |
| NGPRFL | Total number of transient forcing function profiles for inlet massflux or pressure drop | Group OPER | TIME |
| NGXL | Maximum number of positions for gap variations | Group VARY | GEOM |
| NH | Number of entries in the inlet enthalpy versus time forcing function table | Group OPER | TIME |
| NHEAT | Total number of heat transfer correlation sets | Group HEAT | PROPS |
| NHFT | Total number of axial heat flux forcing function tables | | TIME |
| NHFVT(IU) | Heat flux versus time profile associated with assembly NASS | CHAN | FUELS |
| NHIGH(MC) | Number of higher order thermal connections to subchannel I | PREFIX | TIME |
| NHX | Number of elements in exit enthalpy transient table | Group OPER | TIME |
| NINFF(IU) | Loss coefficient forcing function number associated with assembly inlet loss, RAIN | Group CHAN | DRAGS |
| NJUMP | Restart option flag; = 1 problem is restarted | RESTRT | TIME |
| NK | Total number of gap connections | SETIN | FIELDS |
| NLCFF | Total number of loss coefficient forcing function profiles | Group DRAG | TIME |
| NLCFP | Number of entries in loss coefficient forcing function profiles | Group DRAG | TIME |
| NLOW(MC) | Number of lower order thermal connections to channel I | PREFIX | TIME |
| NOGRP | Number of assembly groupings for network model | Group DRAG | DRAGS |
| NOLC | Number of subchannel loss coefficients, CD | Group DRAG | TIME |
| NOUT | Output options for subchannel, rod, crossflow, and wall results or any combination | Group OUTP | TIME |
| NOUTFF(IU) | Loss coefficient forcing function number associated with assembly outlet loss, RAOUT | Group CHAN | DRAGS |
| NP | Number of elements in pressure transient tables | Group OPER | TIME |

| Variables | | Principal Definition | COMDECK |
|---|---|---|---|
| NPCHAN | Output option, number of channels to be printed | Group OUTP | TIME |
| NPFVT(IU) | Pressure drop or flow versus time profile number associated with assembly NASS | Group CHAN | TIME |
| NPGAP | Output option, number of gaps to be printed | Group OUTP | TIME |
| NPNODE | Output option, radial nodes for which fuel temperatures will be printed | Group OUTP | TIME |
| NPOINT | = IE | PREFIX | TIME |
| NPROD | Output option, number of rods to be printed | Group OUTP | TIME |
| NPROP | Number of entries in property table | Group PROP | PROPS |
| NPWALL | Output option, number of walls to be printed | Group OUTP | TIME |
| NQ | Number of entries in the average heat flux transient table | Group OPER | TIME |
| NQAX | Axially temperature dependent fuel property option | Group RODS | FUELS |
| NQPRFL | Total number of heat flux transient forcing function profiles | Group OPER | TIME |
| NRAMP | Number of iterations to insert the effect of wires or loss coefficients | Group DRAG | SPEC6 |
| NRC | = NR | PREFIX | GEOM |
| NROD | Total number of rods | SETIN | FUELS |
| NRODTP | Option for axially varying fuel material | Group RODS | FUELS |
| NROW | Number of rows in matrix to be solved | SOLVER | GEOM |
| NRPF | Option to specify individual assembly power densities | Group OPER | WALLS |
| NSCBC | Subcooled mixing option | Group HEAT | GEOM |
| NSKIPT | Output option, print every NSKIPT timesteps | Group OUTP | TIME |
| NSKIPX | Output option, print every NSKIPX axial nodes | Group OUTP | TIME |
| NTNODE | Number of entries in the temperature dependent fuel property table | Group RODS | PROPS |
| NTRIES | Maximum number of external iterations | Group CALC | TIME |

| Variables | | Principal Definition | COMDECK |
|---|---|---|---|
| NTYPE(MC) | Friction factor correlation number associated with channel I | Group SETIN | PROPS |
| NVISCW | Option for wall viscosity correction to the friction factor | Group DRAG | PROPS |
| NWK | Number of wall connections | Group SLAB | GEOM |
| NWR | Maximum number connections to a channel (thermal + flow) | COBRA | FIELDS |
| NZONE(MT) | Number of fuel zones | Group RODS | FUELS |
| OUTPUT(12) | Array used to print output | RESULT | TIME |
| P(M1,ME) | Relative pressure at axial location J in subchannel I ($lbf/ft^2$) | RECIRC | FIELDS |
| PDN | Nominal power density ($MBtu/hr\text{-}ft^3$) | Group OPER | PROPS |
| PDNA(IU) | Relative assembly power or absolute assembly power density (MBtu/hr-ft) | Group OPER | PROPS |
| PDROP | Old time total pressure drop ($lbf/ft^2$) | COBRA | DRAGS |
| PERIM(MC) | Wetted perimeter PW/12(ft) | SETIN | GEOM |
| PEXIT | System operating pressure, (psia) | Group OPER | WALLS |
| PH(MC) | Subchannel heated perimeter, (in.) | Group CHAN | GEOM |
| PHEAD | Total static pressure drop across network model ($lbf/ft^3$) | NETWORK | DRAGS |
| PHI(MR,6) | Fraction of the heated perimeter of rod N facing subchannel I | Group RODS | FUELS |
| PHITOT(MR) | 1/PHTOT (1/ft) | PREFIX | FUELS |
| PI | Constant = 3.14159 | COBRA | GEOM |
| PLIQ(MP) | Pressure entries in the fluid property table (psia) | Group PROP | PROPS |
| POWR(IJ) | Assembly transient power factor | COBRA | FUELS |
| PR(IL,IM1) | Same as P used with roll option in RECIRC | RECIRC | FIELDS |
| PREF | System pressure ($lbf/in.^2$) | Group OPER | PROPS |
| PRINT(12) | Logical variables; directs output of selected input data groups | SETIN | TIME |

| Variables | | Principal Definition | COMDECK |
|---|---|---|---|
| PRINTC(MC) | Channel numbers for which information will be printed | Group OUTP | TIME |
| PRINTG(MG) | Gap numbers for which information will be printed | Group OUTP | TIME |
| PRINTN(10) | Array for radial fuel node printing | SETIN | TIME |
| PRINTR(MR) | Rod numbers for which information will be printed | Group OUTP | TIME |
| PRINTW(MW) | Wall node numbers for which information will be printed | Group OUTP | TIME |
| PW(MC) | Subchannel wetted perimeter (in.) | Group CHAN | GEOM |
| PWIN(IU) | Wetted perimeter associated with the network model assembly inletloss coefficient (in.) | Group CHAN | DRAGS |
| PWOUT(IU) | Wetted perimeter associated with the network model assembly outlet loss coefficient (in.) | Group CHAN | DRAGS |
| QAX | Interpolated local power factor obtained from axial heat flux table | REHEAT | TIME |
| QQH | Maximum error in energy solution | ENERGY | DRAGS |
| QPRIM(MC) | Source term in energy equation | DIFFER | FIELDS |
| QTOTAL | Total heat generation in the problem (Btu/s) | REHEAT | FUELS |
| QWAL(MW) | Source vector for the slab energy equation (Btu/s-ft) | ENERGY | WALLS |
| RADIAL(MR) | Radial power factor of rod N | Group RODS | FUELS |
| RAIN(IU) | Network model assembly inlet loss parameter (1/ft-lbm) | Group CHAN | DRAGS |
| RAOUT(IU) | Network model assembly outlet loss parameter (1/ft-lbm) | Group CHAN | DRAGS |
| RCCLAD(MT) | Product of cladding density and specific heat (Btu/ft$^3$-$^o$F) | PREFIX | FUELS |
| RCFUEL(MT) | Product of fuel density and specific heat (Btu/ft$^3$-$^o$F) | | FUELS |
| RCLAD(MT) | Density of cladding material (lbm/ft$^3$) | Group RODS | FUELS |
| RECALL | If RECALL = 0.0, solution is not converged. If RECALL = 1.0, solution is converged and rod temperatures are then calculated | RECIRC | FUELS |
| RECL(LMM) | Reynolds number entries in loss coefficient forcing function tables | Group DRAG | TIME |
| RFUEL(MT) | Density of fuel material (lbm/ft$^3$) | Group RODS | FUELS |

| Variables | | Principal Definition | COMDECK |
|---|---|---|---|
| RGIN(MJ) | Network model group inlet loss parameter (1/ft-lbm) | Group DRAG | DRAGS |
| RGOUT(MJ) | Network model group outlet loss parameter (1/ft-lbm) | Group DRAGS | DRAGS |
| RHO(M1,ME) | Local density (lbm/ft$^3$) | RECIRC | |
| RHOBAR(M1,ME) | Average density $0.5*(\rho_j + \rho_{j+1})$ | Group RPROP | FIELDS |
| RHOOLD(M1,ME) | Density at the previous time step (lbm/ft$^3$) | COBRA | FIELDS |
| RHOSOL(ID) | Solid structure density (lbm/ft$^3$) | Group PROP | PROPS |
| RMUINLT | Inlet viscosity used in network model calculation (lbm/ft-sec) | COBRA | DRAGS |
| RTIN | Network model total flow loss parameter (1/ft-lbm) | Group DRAG | DRAGS |
| RWALL(ND,MW) | Wall thermal resistance (ft$^2$-sec-$^o$F/Btu) | Group SLAB | PROPS |
| R2KF(MT) | DFUEL$^2$/(4*KFUEL) | PREFIX | FUELS |
| SAVEAL(M2) | Equivalenced array for peripheral storage of axially dimensioned variables | COBRA | FIELDS |
| SAVEA1(M1) | Dummy array that stores variables for the J-1 level during option | COBRA | FIELDS |
| SAVEA2(M1) | Dummy array that stores variables for the J-level during option | COBRA | FIELDS |
| SAVEA3(M1) | Dummy array that stores variables for the J+1 level during option | COBRA | FIELDS |
| SAVRES(LNS) | Dummy array used for output | RESULT | FIELDS |
| SAVRI(LIO) | Dummy array used for roll I/O in RECIRC | RECIRC | FIELDS |
| SCLADMX | Maximum cladding temperature ($^o$F) | REHEAT | FUELS |
| SFOLD(MC,2) | Old iterate value of flow in equal pressure drop flow split calculation (lbm/sec) | SPLIT | FIELDS |
| SIGNAL(18) | Alphanumeric variable that names subroutine in which error has occurred | SETUP | TIME |
| SL | Transverse momentum parameter, S/L | Group CHAN | GEOM |
| SPOLD(MC,2) | Old iteration value of node pressure drop in equal pressure drop flow split calculation | SPLIT | FIELDS |

| Variables | | Principal Definition | COMDECK |
|---|---|---|---|
| T(MC) | Subchannel coolant temperature (°F) | PROP | PROPS |
| TCLAD(MT) | Cladding thickness, (ft) | Group RODS | FUELS |
| TEMLIQ(MP) | Temperature entry in fluid property table (°F) | Group PROP | PROPS |
| TERM1(MC) | Utility array | | FIELDS |
| TERM2(MC) | Utility array | | FIELDS |
| TEXT(17) | Alphanumeric problem identifier | | TIME |
| THETA | Subchannel orientation from vertical (degrees) | Group CHAN | GEOM |
| TIN | Nominal inlet coolant temperature (°F) | SETIN | TIME |
| TINLET(MC) | Subchannel inlet coolant temperature (°F) | SETIN | FIELDS |
| TMH(MC) | Correction to coolant temperature for fluid conduction heat transfer (°F) | DIFFER | FIELDS |
| TPRINT | Total time to next printout of transient results | RESULTS | TIME |
| TRANT | Transient time printout interval, (sec) | Group OUTP | TIME |
| TREF | Reference temperature for table lookup | PROP | SPEC12 |
| TROD(MN,LN4,ME) | Rod temperatures at selected internal points | HOTROD | FIELDS |
| TSAVE(M7,MR) | Temporary value of rod temperatures | HOTROD | FUELS |
| TS(IQ,LIP,MX) | Side boundary temperatures (°F) | ENERGY | WALLS |
| TTIME | Total transient time (sec) | Group CALC | TIME |
| TTOP(LIP,2,2) | Plenum boundary temperatures (°F) | EXPROP | WALLS |
| TVARY(MP) | Temperature entry in temperature dependent fuel property table (°F) | Group RODS | PROPS |
| TWALL(M1,ME) | Temperature of the solid structure node (°F) | ENERGY | FIELDS |
| TWOLD(M1,ME) | Slab temperature at previous time step (°)F | COBRA | FIELDS |
| T4(M6) | Cladding or slab temperature to the fourth power | REHEAT | WALLS |
| UWALL(ND,MW) | Total wall-to-coolant resistance (Btu/s-ft$^2$-°F) | Group SLAB | PROPS |
| UWCP(ND,MW) | UWALL/coolant heat capacity | DIFFER | PROPS |

| Variables | | Principal Definition | COMDECK |
|---|---|---|---|
| V(MG) | Specific heat volume ($ft^3/lbm$) | PROP | FIELDS |
| VARYCP(MP) | Specific heat entry in temperature dependent fuel property table ($Btu/lbm-^oF$) | Group RODS | PROPS |
| VARYK(MP) | Thermal conductivity entry in temperature dependent fuel property table ($Btu/hr-ft-^oF$) | Group RODS | PROPS |
| VISC(MC) | Coolant viscosity (lbm/sec-ft) | PROP | PROPS |
| VISCW(MC) | Wall viscosity correction to friction factor (lbm/ft-sec) | PROP | PROPS |
| VISLIQ(MP) | Viscosity entry in property table (lbm/ft-sec) | Group PROP | PROPS |
| VLIQ(MP) | Specific volume entry in property table ($ft^3/lbm$) | Group PROP | PROPS |
| VP(MC) | Same as V ($ft^3/lbm$) | PROP | PROPS |
| VWAL(MH,MW) | Slab energy coefficient matrix ($Btu/s-ft^oF$) | ENERGY | WALLS |
| W(M1,ME) | Crossflow (lbm/ft-sec) | RECIRC | FIELDS |
| WALLS(IU) | Utility array | | DRAGS |
| WERRY | Convergence criteria | Group CALC | DRAGS |
| WIDTH(ND,MV) | Width of wall connection (in.) | Group SLAB | GEOM |
| WOLD(M1,ME) | Crossflow from previous time step (lbm/ft-sec) | COBRA | FIELDS |
| WP(MG) | Turbulent crossflow (lbm/ft-sec) | DIFFER | FIELDS |
| WPP(MG) | Total of turbulent and conduction energy transfer | DIFFER | FIELDS |
| WR(IN,IM1) | Same as W, used with roll option in RECIRC | RECIRC | FIELDS |
| WTEMP(MG) | Old iterate value of crossflow | MOMENT | FIELDS |
| X(MX) | Axial distance from bundle entrance (in.) | SETUP | GEOM |
| Y(MP) | Relative axial location for axial heat flux table | Group OPER | TIME |
| YG(MM) | Time axis for inlet flow or pressure drop forcing function (sec) | Group OPER | TIME |
| YH(LMM) | Time axis for inlet enthalpy forcing function (sec) | Group OPER | TIME |
| YHX(LMM) | Time axis for exit enthalpy forcing function (sec) | Group OPER | TIME |

| Variables | | Principal Definition | COMDECK |
|---|---|---|---|
| YP(LMM) | Time axis for system pressure forcing function (sec) | Group OPER | TIME |
| YQ(LMM) | Time axis for heat flux forcing function (sec) | Group OPER | TIME |
| YT(MP) | Time axis for maximum time step forcing function (sec) | Group CALC | TIME |
| Z | Total axial length (ft) | Group CHAN | GEOM |
| ZEND(MT,MY) | Relative axial location of the end of a fuel zone | Group RODS | FUELS |
| ZX(MN,MR) | Intermediate solution vector used with finite-difference fuel model | REHEAT | FUELS |
| ZZ | Total axial length (in.) | Group CHAN | |

# APPENDIX C

## COMDECK LISTING

APPENDIX C

## COMDECK LISTING

```
*comdeck geom
      dimension ac(mc),pw(mc),ph(mc),dc(mc),
     1          lc(mc,4),gaps(mc,4),dist(mc,4),
     2          datin(ln2),iloc(ln8)
c
      common /geom/ gbeg1(1),ik(mg),jk(mg),length(mg),
     1              ikw(nd,mw),z,ftm,theta,atotal,
     2              elev,sl,dx(mx),gk(lit),ibandw(iu),
     3              an(mc),dhydn(mc),ilocs(ln1,mc),perim(mc),
     4              hperim(mc),dduct(iu,lix),abar(mc),endg1
c
      common /flags/ gbeg2(1),ierror,j1,iterat,nrc,nwk,
     1               iroll,naah,naahp1,nspec(20),
     2               isolve,iass,itsave,nfcon,nscbc,nramph,
     3               ischeme,ibwl,ibwr,ic,iwide,
     4               isym,nrow,iexp,i3post,endg2
c
      common /const/ pi,dtgc,gc,idtgc,dti,sb
c
      common /barea/ gbeg3(1),afact(ml,ma),gfact(ml,ms),axl(ml),x(mx),
     1               gapxl(ml),naramp,nafact,naxl,ngxl,ngaps,nch(ma),
     2               ngap(ms),idarea(mc),idgap(mg),gapn(mg),endg3
c
      equivalence (datin(1),ac(1)),(iloc(1),ilocs(1,1)),
     1            (pw(1),dpk(1)),(ph(1),flow(1)),
     2            (dc(1),qprim(1)),
     3            (gaps(1,1),visc(1)),(dist(1,1),vp(1)),
     4            (term2(1),ac(1)),(lc(1,1),hfilm(1))
c
      real idtgc,length
c
c     level 2, /geom/                                                  xcdc
c     level 2, /flags/                                                 xcdc
*comdeck fields
      common /field1/ fbeg1(1),saveal(m2),wtemp(mg),
     1                wp(mg),dfdpd(mx),dfdpo(mx),dtii(mg),
     2                dtjj(mg),endf1
c
      dimension p(ml,me),f(ml,me),fold(ml,me),h(ml,me),hold(ml,me),
     1          rho(ml,me),rhoold(ml,me),rhobar(ml,me),w(ml,me),
     2          wold(ml,me),dfdp(ml,me),dwdp(ml,me)
c
      dimension twall(ml,me),twold(ml,me),iftyp(ml,me),flux(ml,me),
```

```
     1          hsurf(m1,me),trod(mn,ln4,me)
c
      dimension a(m1,me),dhyd(m1,me),gap(m1,me),app(m1,me)
c
      equivalence (w(1,1),saveal(1)),(wold(1,1),saveal(m3)),
     1            (gap(1,1),saveal(lm4)),(dwdp(1,1),saveal(m5)),
     2            (twall(1,1),saveal(ny)),(twold(1,1),saveal(lnu))
c
      equivalence (iftyp(1,1),saveal(m9)),(flux(1,1),saveal(lmb)),
     1            (hsurf(1,1),saveal(md)),(trod(1,1,1),saveal(mf))
c
      equivalence (p(1,1),saveal(mu)),(f(1,1),saveal(lnp)),
     1            (rho(1,1),saveal(lnc)),(hold(1,1),saveal(lng)),
     2            (a(1,1),saveal(lns)),(dhyd(1,1),saveal(nl)),
     3            (h(1,1),saveal(lna)),(fold(1,1),saveal(nx)),
     4            (rhoold(1,1),saveal(lnn)),(rhobar(1,1),saveal(lnt)),
     5            (dfdp(1,1),saveal(lnr)),(app(1,1),saveal(ne))
c
      dimension pr(il,im1),fr(il,im1),wr(in,im1),delr(il,im1),
     1          dfdpr(il,im1),dwdpr(in,im1)
c
      equivalence (pr(1,1),saveal(1)),(fr(1,1),saveal(li1)),
     $            (dfdpr(1,1),saveal(li2)),(delr(1,1),saveal(li3)),
     $            (wr(1,1),saveal(li4)),(dwdpr(1,1),saveal(li5))
c
      common /field2/ fbeg2(1),hah(ie,mc),savri(lio),saver(mc),
     1                flow(mc),qprim(mc),term2(mc),ichan(ln6,mc),
     2                hfilm(mc),tmh(mc),ftemp(mc),fsp(mc),
     2                tinlet(mc),finlet(mc),hinlet(mc),
     3                fmomf(mc),dpk(mc),dpdx(mc),relxi(mc),
     4                dhdx(iu),dfdx(iu),v(mc),cons(mx),
     5                nach(mc),itypin(lit,3),endf2
c
      common /bundle/ fbeg3(1),mlen,ipoint(iu,8),ngap1,ngap2,
     1                nchan1,nchan2,nchana,nassem,nchanl,
     2                mm,it,ip,ia,iw,iz,ix,ir,if,nz,nu,nk,
     3                maxtyp,nwr,ndxp1,ndx,lui,endf3
c
      dimension savres(ln5),savea1(m1),savea2(m1),savea3(m1)
c
      dimension term1(mc),mflag(mc),dpbar(iu),
     1          wpp(mg),spold(mc,2),sfold(mc,2),aad(ie,mc),
     2          const(lib),conk(mg)
c
      equivalence  (savea1(1),saveal(1)),(savea2(1),saveal(lnk)),
     1             (savea3(1),saveal(nw)),(savres(1),savea2(1))
c     level 2, /field1/                                              xcdc
c     level 2, /field2/                                              xcdc
      logical mflag
      equivalence (mflag(1),term2(1)),(dpbar(1),hah(1,1)),
```

```
     2            (spold(1,1),hah(1,1)),(sfold(1,1),hah(1,is)),
     3            (aad(1,1),hah(1,1)),(const(1),term2(1)),
     4            (conk(1),hah(1,1))
c
      equivalence (wp(1),wpp(1)),(ftemp(1),term1(1))
c
*comdeck props
c
      common /prop1/ pbeg1(1),pliq(mp),temliq(mp),hliq(mp),conliq(mp),
     1               cpliq(mp),visliq(mp),vliq(mp),tvary(mp),varyk(mp),
     2               varycp(mp),varyr(mp),ntnode,nprop,nviscw,
     3               endp1
c
      common /prop2/ pbeg2(1),pref,lamnh(liw),nheat,nflmc(iu),ah1(liw),
     1               ah2(liw),ah3(liw),ah4(liw),ah11(liw),ah12(liw),
     2               ah13(liw),ah14(liw),istar(mg),endp2
c
      common /prop3/ pbeg3(1),visc(mc),viscw(mc),con(mc),
     1               cp(mc),vp(mc),t(mc),vscm(mc),cip(mc),
     2               ntype(mc),amix(lit),bmix(lit),
     3               endp3
c
      common /matprp/ pbeg4(1),uwcp(nd,mw),uwall(nd,mw),
     1                areaxcp(mw2),mattypp(mw2),tpsave(mw2),
     2                npwcon,consol(id),cpsol(id),
     3                rhosol(id),rdima(liz),rdimb(liz),
     4                aname(id),amat(id),pdna(iu),pdn,nsprop,endp4
c
      logical lamnf
      logical lamnh
c
c     level 2, /prop3/                                                  xcdc
*comdeck drags
c
      common /drag/ dbeg1(1),dpa(iu),kij,cij(mg),ffold(mc,1),
     1              aa(liw),bb(liw),cc(liw),dd(liw),ee(liw),
     2              aa1(liw),bb1(liw),cc1(liw),lamnf(liw),
     3              nfrict,endd1
c
      common /bgrid/ dbeg2(1),jlc(1),factor(lit,mq,mx),ilce(lit,mq),
     1               lcass(iu),lcff(mk),lcasst(mk),ifact(mq,mx),
     2           fdiv(mg),nlevel(lit,mq),cd(lit,mq,mx),xcd(lit,mq,mx),
     3               naramps,ifb(mc),nblock,flo(iu),allf,nb1(lit),
     4               flog(mj),jcon(iu),pwin(iu),pwout(iu),rain(iu),
     5               raout(iu),rgin(mj),rgout(mj),netgrp(iu),
     6               noutff(iu),dpt(iu),rmuinlt,nogrp,pdrop,
     7               netwk,fpri(iu),dppri(iu),lblok(mk,2),
     8               iblokt,rtin,hgin(mj),hgout(mj),hain(iu),
     9               ghead(mc),dpcor(mc),walls(iu),ilcs(lit,mq),
     1               nramp,ninff(iu),phead,haout(iu),ibloka(mc),
```

```
     2                iblokc(mc),endd2
c
      real kij
      logical lcass,jcon
      logical nflag
c     level 2, /bgrid/                                                  xcdc
*comdeck time
c
      common /times/ tbeg1(1),dt,dtmaxe,dtimp,iprnte,iprnta,ttime,
     1               etime,clock(8),maxt,ndt,ndtp1,itstep,endt1
c
      common /outout/ tbeg2(1),output(12),print(14),text(17),tdumy(10),
     1                tprint,trant,naxp,nout,npchan,npgap,i2,i3,
     2                npnode,nprod,printn(10),nskipt,nskipx,nq,ng,ig,
     3                nh,ihh,np,im(ms),jm(ms),imp(10),jmp(10),i8,
     4                kase,printc(mc),printg(mg),printr(mr),ipreb,
     5                ncout,nrout,ngout,nwout,npwall,printw(mw),
     6                signal(18),h1,h2,h3,h4,h5,h6,h7,h8,endt2
c
      common /tables/ tbeg3(1),yp(lmm),fp(lmm),yg(lmm),fg(lmm,liw),
     1                fh(lmm),yq(lmm),fq(lmm,liw),yt(mp),yh(lmm),
     2                fhx(lmm),yhx(lmm),ft(mp),y(mp,mv),axial(mp,mv),
     3                naflx(iu),tmncvl(iu),recl(lmm),fflc(lmm,liw),
     4                nax(mv),nlcfp,nolc,nlcff,nhx,endt3
c
      common /bound/ tbeg4(1),hout,njump,k10,ntries,hin,gin,tin,
     1               itdp,ngprfl,nqprfl,npfvt(iu),dps,exith,exitmu,
     2               exitt,negf(iu),negflo,ibdf,ftotal,endt4
c
      common /index/ tbeg5(1),nhigh(mc),nlow(mc),ncount(mr),ihigh,
     1               ilow,ilowp1,npoint,ihalt,endt5
c
      common /convrg/ tbeg6(1),qoh,accely,werry,accelf,qax,ferror,qerror
     1                ,dampng,accelh,accrho,accelw,herror,qor,endt6
c
      integer printc,printg,printn,printr,printw
      logical print
c
*comdeck fuels
c
      common /fuel/ flbeg1(1),kfuel(mt),kclad(mt),rfuel(mt),rclad(mt),
     1              cfuel(mt),cclad(mt),tclad(mt),hgap(mt),powr(ij),
     2              ntheta,nrdthta,nqax,nc,nrod,nrodtp,nfuelt,recall,
     3              bx(2,mn,mr),zx(mn,mr),qtotal,scladmx,
     4              scldmxo,cladmx,acladmx(2),rcladmx(2),zcladmx(2),
     5              lr(mr,6),dfuel(mt),phi(mr,6),radial(mr),d(mr),
     6              idfuel(mr),nhfvt(iu),sparev(20),qvoid(mr),
     7              idtyp(mt),nzone(mt),iztyp(mt,my),zend(mt,my),
     8              rcon,wcon,nrr(mr),nrw(mr),nclad(mr,6),nwall(mr,2),
     8              delrad(mt),dodr(mn,mt),dsqr(mn,mt),endfl1
```

```
c
      common /repeat/ flbeg2(1),drod(mt),geomf(mt),dfueli(mt),
     1                rcfuel(mt),rcclad(mt),r2kf(mt),
     2                phitot(mr),ring(mr),rang(mr),rung(mr),
     3                hgap1(mt),lri(lir,mc),tsave(m7,mr),endfl2
c
      real kfuel,kclad
      integer acladmx, rcladmx, zcladmx
c     level 2, /fuel/                                                   xcdc
c     level 2, /repeat/                                                 xcdc
*comdeck walls
c
      common /walls/ wbeg1(1),kside(iu,m11),uwal(mh1,mw1),qwal(mw),
     1               kwal(mh,mw),icf(nd,mw),twsave(mw),
     2               icon(mh,mw),rwal(liz),wid(liz),mattyp(mw),
     3               nsidf(mw),nsidw(mw),relxk(mw),nkss,nksf,
     4               wallxc(mw),nrpf,qslab(mw),naxk(mw),endw1
c
      common /radi8/ wbeg2(1),rser(liz),rpar(liz),ema(liz),emb(liz),
     1               arad(liz),radsav(2,mw),sumsav(iu,m11),t4(m6),
     2               radgap(liz),emx(lnz),brad(lnz,m8),areas(nv,lnz),
     3               fv1(la,la),fv2(lb,lb),fv3(llc,llc),fv4(ld,ld),
     4               fv5(le,le),fv6(lf,lf),rratio(6,8),irad,msid(iu),
     5               itypr(iu),fvw(nv,lnz,lnz),sumr(mr),emv(6,8),
     6               t10sav(5),radc(mr),sumrg(lnz,nv),endw2
c
      common /walbnd/ wbeg3(1),cs1(lif),cs2(lif),ems(lif),ts(iq,lip,mx),
     1                nzoneb(lip,iq),nbctyp(lip,iq,mx),zendb(lip,iq,mx),
     2                bndsav(iq),nzonet(no),zendt(mx,no),bt(mx,no),
     3                nbttyp(iq),nbtemp,nbcont,qbsrc(iq),qpsrc(2,2),
     4                ncontyp,tamb(iq,mx),sper(lip,iq),qside(mx),
     5                nhsid(iq),nwsid,iwsid(iq),awsid(iq),nbtyp,endw3
c
      common /plena/ wbeg4(1),npr,iplenr(2),awps(lip),awpax(lip),
     1               npsid(2),npax(2),tambp(2,2),nptyp(lip,2,2),
     2               sperp(lip,2,2),ttop(lip,2,2),qtop(2),
     3               sumc(2),npw(2,2),exitsav(2),cpsav(2),
     4               exittod(2),pexit,hexit(mc),exitd,
     5               dxwall,dxplen(mw2),ipw(mw),ipointp(2,mw),
     6               hplen,itpset(2),endw4
c
c     level 2, /walls/                                                  xcdc
c     level 2, /radi8/                                                  xcdc
c     level 2, /walbnd/                                                 xcdc
c     level 2, /plena/                                                  xcdc
*comdeck rebal
c
      common /rebal/ rbeg1(1),qcoef(iu),coefh(mc),coefw(iu,lnz),
     1               caxld(mx2,3),qres(mx2),dtax(mx2),resum(iu),
     2               qcon(iu),creb(iu),endr1
```

```
c
c     level 2, /rebal/                                                  xcdc
c
*comdeck spec20
      dimension savea1(m1),savea2(m1),savea3(m1)
c     level 2, savea1,savea2,savea3                                     xcdc
*comdeck spec30
      dimension record(1)
c     level 2, record                                                   xcdc
```

# APPENDIX D

## INPUT/OUTPUT FILES FOR COBRA-SFS

# APPENDIX D

## INPUT/OUTPUT FILES FOR COBRA-SFS

| Logical Unit | Local File | Description |
|---|---|---|
| 5 | INPUT | COBRA-SFS formatted input file; read only |
| 6 | OUTPUT | COBRA-SFS formatted output file; write-only |
| 7 | TAPE7 | Binary input file after input echo |
| 8 | TAPE8 | Binary file containing common data to be saved for a subsequent restart run |
| 10 | TAPE10 | Formatted file containing radiation exchange factor input generated by program RADX-1 |
| 12 | TAPE12 | Binary file containing flow field variables for use in the pressure solution when the roll option is used |
| 16 | TAPE16 | Binary file containing axial level information when the roll option is used |
| 27 | TTY | Brief printed messages are written to this file during COBRA-SFS execution |

# APPENDIX E

## SAMPLE PROBLEM NUMBER 1 OUTPUT

# APPENDIX E

## SAMPLE PROBLEM NUMBER 1 OUTPUT

```
1          * * * * * * * * * * * * * * * * * * * * * * * * * * * * * * * * * * * * * * * * * *
           this is the cobra-sfs (spent fuel storage) code for multiassembly spent fuel cask analysis
                      written  at pacific northwest laboratory 1982-1986
                      creation date for this version (cycle  0) - 11-01-86

           * * * * * * * * * * * * * * * * * * * * * * * * * * * * * * * * * * * * * * * * * *
                      contact d.r. rector (509) 375-2300
                              c.l. wheeler (509) 375-2681
                              n.j. lombardo (509) 375-3644
                              t.e. michener (509) 375-2162
```

cobra dimension parameters:

| | | | | | |
|---|---|---|---|---|---|
| id= | 6 | ie= | 40 | lif= | 15 |
| ih= | 9 | lip= | 8 | iq= | 7 |
| ir= | 9 | lit= | 3 | iu= | 6 |
| liw= | 6 | ix= | 8 | liz= | 15 |
| la= | 15 | lb= | 1 | llc= | 1 |
| ld= | 1 | le= | 1 | lf= | 1 |
| ma= | 20 | mc= | 30 | me= | 40 |
| mg= | 55 | mh= | 11 | mi= | 12 |
| mj= | 1 | mk= | 3 | ml= | 9 |
| lmm= | 29 | mn= | 6 | mp= | 31 |
| mq= | 40 | mr= | 50 | ms= | 30 |
| mt= | 10 | mw= | 60 | mx= | 40 |
| my= | 4 | nd= | 9 | no= | 1 |
| nv= | 2 | lnz= | 10 | | |

```
1***** the following is an image listing of the cobra-sfs input cards *****
        radx generated input is not included
0       0       1       2       3       4       5       6       7       8
        12345678901234567890123456789012345678901234567890123456789012345678901234567890

  2       1          EXAMPLE PROBLEM  1 FOR COBRA-SFS
  3    prop    11    3
  4            0.     100.     133.9    .0154     .240    14.08    .0463
  5            0.     200.     157.9    .0174     .241    16.67    .0518
  6            0.     300.     182.1    .0193     .243    19.23    .0580
  7            0.     400.     206.5    .0212     .245    21.74    .0630
  8            0.     500.     231.1    .0231     .247    24.27    .0680
  9            0.     600.     256.0    .0250     .250    26.81    .0720
 10            0.     700.     281.1    .0268     .253    29.33    .0770
 11            0.     800.     306.7    .0286     .256    31.85    .0810
 12            0.     900.     332.5    .0303     .259    34.36    .0850
 13            0.    1000.     358.6    .0319     .262    36.90    .0889
 14            0.    2000.     617.2    .0471     .286    62.11    .1242
 15        1 alum       0.       0.     119.
 16        2 sstl       0.       0.      9.4
 17        3 lead       0.       0.     19.0
 18    chan     6   12
 19         30.00       0.
 20        1    1    9
 21        1    1    0    0    1
 22        1.42781.842.4422   2.4185.7250   4.4185.7250
 23        2.39361.624.8844   3.4185.7250   5.1770.7250
 24        3.42781.842.4422   6.4185.7250
 25        4.39361.624.8844   5.1770.7250   7.4185.7250
 26        5.29871.7691.769   6.1770.7250   8.1770.7250
 27        6.39361.624.8844   9.4185.7250
 28        7.42781.842.4422   8.4185.7250
 29        8.39361.624.8844   9.4185.7250
 30        9.42781.842.4422
 31        2    1    9
 32        1    1    0    0    1
 33        3    2    1
 34        1    1    0    0    2
 35        12.0866.790
```

```
 36        4    2    1
 37        1    1    0    0    2
 38        5    2    1
 39        1    1    0    0    2
 40        6    2    1
 41        1    1    0    0    2
 42
 43     rods    1    1    1    0    0
 44        1    1    4
 45        1 .563   1.    1  .25    2  .25    4  .25    5  .25
 46        2 .563   1.    2  .25    3  .25    5  .25    6  .25
 47        3 .563   1.    4  .25    5  .25    7  .25    8  .25
 48        4 .563   1.    5  .25    6  .25    8  .25    9  .25
 49        2    1    4
 50        3    0    0
 51        4    0    0
0        0        1        2        3        4        5        6        7        8
         12345678901234567890123456789012345678901234567890123456789012345678901234567890

1
0        0        1        2        3        4        5        6        7        8
         12345678901234567890123456789012345678901234567890123456789012345678901234567890

 52        5    0    0
 53        6    0    0
 54      1.0  1.0  1.0 .563  1.0  1.0  1.0  1.0  1.0 .563
 55     slab   14   12   38
 56        1                        102.8
 57        2                        47.50
 58        3                        64.74
 59        4                        47.50
 60        5                        95.00
 61        6                        129.5
 62        7                        51.40
 63        8                        2089.
 64        9                        99.60
 65       10                        273.2
 66       11                        8655.
 67       12                        504.     172.2  .20  .25  .25
```

| | | | | | | | | | | | |
|---|---|---|---|---|---|---|---|---|---|---|---|
| 68 | 13 | | | 252. | | 86.40 | .20 | .25 | .50 | | |
| 69 | 14 | | | 66.24 | | | | | | | |
| 70 | 1 | 1.1488 | | 2 | 2 | 1 | 24 | 12 | | | |
| 71 | 2 | 1.1250 | | 2 | 3 | 2 | 6 | 5 | | | |
| 72 | 3 | 1.5350 | | 1 | 4 | 3 | | | | | |
| 73 | 4 | 1.5350 | | 1 | 5 | 4 | | | | | |
| 74 | 5 | 1.2500 | | 1 | 7 | 4 | | | | | |
| 75 | 6 | 1.2675 | | 1 | 8 | 6 | | | | | |
| 76 | 7 | 1.5350 | | 1 | 9 | 3 | | | | | |
| 77 | 8 | 1.2675 | | 1 | 10 | 5 | | | | | |
| 78 | 9 | 1.5350 | | 1 | 13 | 4 | | | | | |
| 79 | 10 | 1.1250 | | 2 | 11 | 2 | 15 | 5 | | | |
| 80 | 11 | 1.5350 | | 1 | 12 | 3 | | | | | |
| 81 | 12 | 1.5350 | | 1 | 13 | 4 | | | | | |
| 82 | 13 | 1.2500 | | 2 | 14 | 7 | 16 | 4 | | | |
| 83 | 14 | 1.2975 | | 1 | 26 | 13 | | | | | |
| 84 | 15 | 1.2675 | | 1 | 17 | 6 | | | | | |
| 85 | 16 | 1.5350 | | 1 | 18 | 3 | | | | | |
| 86 | 17 | 1.2675 | | 1 | 19 | 5 | | | | | |
| 87 | 18 | 1.5350 | | 1 | 22 | 4 | | | | | |
| 88 | 19 | 1.1250 | | 2 | 20 | 2 | 23 | 1 | | | |
| 89 | 20 | 1.5350 | | 1 | 21 | 3 | | | | | |
| 90 | 21 | 1.5350 | | 1 | 22 | 4 | | | | | |
| 91 | 22 | 1.2500 | | | | | | | | | |
| 92 | 23 | 1.1488 | | 1 | 28 | 12 | | | | | |
| 93 | 24 | 21.363 | | 2 | 25 | 8 | 29 | 9 | | | |
| 94 | 25 | 21.363 | | 2 | 26 | 8 | 30 | 9 | | | |
| 95 | 26 | 21.363 | | 2 | 27 | 8 | 31 | 9 | | | |
| 96 | 27 | 21.363 | | 2 | 28 | 8 | 32 | 9 | | | |
| 97 | 28 | 21.363 | | 1 | 33 | 9 | | | | | |
| 98 | 29 | 39.169 | | 2 | 30 | 10 | 34 | 14 | | | |
| 99 | 30 | 39.169 | | 2 | 31 | 10 | 35 | 14 | | | |
| 100 | 31 | 39.169 | | 2 | 32 | 10 | 36 | 14 | | | |
| 101 | 32 | 39.169 | | 2 | 33 | 10 | 37 | 14 | | | |
| 102 | 33 | 39.169 | | 1 | 38 | 14 | | | | | |
| 103 | 34 | 2.5467 | | 1 | 35 | 11 | | | | | |
| 104 | 35 | 2.5467 | | 1 | 36 | 11 | | | | | |
| 105 | 36 | 2.5467 | | 1 | 37 | 11 | | | | | |
| 0 | 0 | 1 | 2 | 3 | | 4 | | 5 | 6 | 7 | 8 |

```
         12345678901234567890123456789012345678901234567890123456789012345678901234567890

1
0        0        1        2        3        4        5        6        7        8
         12345678901234567890123456789012345678901234567890123456789012345678901234567890

  106       37   2.5467                1   38   11
  107       38   2.5467
  108        1    11.16       .70
  109        2    20.88       .37
  110        3     5.76       .70
  111        4    10.44       .37
  112        5     7.28      1.07
  113        6     3.27      1.19
  114        7     6.48      1.19
  115        8    124.6     1.034
  116        9    52.56     1.926
  117       10    157.7      .642
  118       11    48.24     2.320
  119       12    15.48      .500
  120        1    1    3    1    6
  121        3    3    1    1    1    1    2    2    3    1    5
  122        4    3    1    2    2    1    3    1    3    1    5
  123        5    2    3    1   12    4    1   12
  124        6    2    1    1    3    1    4    4
  125        7    3    1    3    1    1    6    2    4    1    5
  126        8    2    1    4    4    1    7    3
  127        9    3    1    6    2    1    9    1    4    1    5
  128       11    4    1    7    1    1    8    2    2    1    1    2    2    2
  129       12    4    1    8    2    1    9    1    2    2    2    2    3    1
  130       14    2    4    1    7    5    1    7
  131       15    2    2    1    3    2    4    4
  132       16    3    2    3    1    2    6    2    5    1    5
  133       17    2    2    4    4    2    7    3
  134       18    3    2    6    2    2    9    1    5    1    5
  135       20    3    2    7    1    2    8    2    6    1    5
  136       21    3    2    8    2    2    9    1    6    1    5
  137       22    2    5    1   12    6    1   12
  138       23    1    6    1    6
```

```
139        24    1    3    1   11
140        25    2    3    1   10    4    1    9
141        26    2    4    1    8    5    1    8
142        27    2    5    1    9    6    1   10
143        28    1    6    1   11
144
145     radg     6    1    2
146         1    6
147         1 1.19  .20    1    0    2 .277    3 .093    4 .023    5 .053    6 .554
148         2 1.07  .20    1    0    2    0    3    0    4    0    5 .072    6  .62
149         3 1.07  .20    1    0    2    0    3    0    4    0    5 .047    6  .85
150         4 .500  .20    1    0    2    0    3    0    4    0    5 .750    6 .195
151         5 .642  .25    1    0    2    0    3    0    4    0    5  .12    6  .00
152         6 2.32  .25    1    0    2    0    3    0    4    0    5    0    6  .00
153         2    6
154         1 1.19  .20    1    0    2 .277    3 .093    4 .023    5 .290    6 .317
155         2 1.07  .20    1    0    2    0    3    0    4    0    5 .370    6 .322
156         3 1.07  .20    1    0    2    0    3    0    4    0    5 .690    6  .21
157         4 .500  .20    1    0    2    0    3    0    4    0    5 .815    6 .130
158         51.926  .25    1    0    2    0    3    0    4    0    5  .01    6  .01
159         61.034  .25    1    0    2    0    3    0    4    0    5    0    6  .01
0        0        1        2        3        4        5        6        7        8
         12345678901234567890123456789012345678901234567890123456789012345678901234567890

1
0        0        1        2        3        4        5        6        7        8
         12345678901234567890123456789012345678901234567890123456789012345678901234567890

160         1    1    8    3    4    7    9   12   11    8    6
161         2    1    8   11   12   16   18   21   20   17   15
162         3   -1    6    1    3    4    5   25   24
163         4   -2    6   14    9    7    5   25   26
164         5   -2    6   14   16   18   22   27   26
165         6   -1    6   23   20   21   22   27   28
166     heat     1    0    1
167                   3.66                 3.66
168       1.0  1.0
169     drag     2
170                            100.0 -1.0
```

```
                                  64.0 -1.0
    bdry    13    1    5    1
       1     .0022
       2   5.13e-7   1.26e+7       .28
       3     .0011
       4   1.44e-9   1.92e+7      .333  .25
       5    .00011
       6    .00044
       7    .00018
       8     .0011
       9     .0001
      10    .00046
      11    .00022
      12    .00015
      13   2.90e-9   2.94e+6      .333  .25
       1    2  0.0 125.  1.0 125.
      34    44.579    1
       11.0      1  1.0    1
       21.624    1  1.0    2
       31.695    1  1.0    3
       41.695    1  1.0    4
      35    44.579    1
       11.0      1  1.0    1
       21.624    1  1.0    2
       31.695    1  1.0    3
       41.695    1  1.0    4
      36    44.579    1
       11.0      1  1.0    1
       21.624    1  1.0    2
       31.695    1  1.0    3
       41.695    1  1.0    4
      37    44.579    1
       11.0      1  1.0    1
       21.624    1  1.0    2
       31.695    1  1.0    3
       41.695    1  1.0    4
      38    44.579    1
       11.0      1  1.0    1
       21.624    1  1.0    2
```

```
 210        31.695    1  1.0    3
 211        41.695    1  1.0    4
 212        2 12.8 26.2    6    4 125. 125.
 213        1  1.0    5
0        0       1        2        3        4        5        6        7        8
         12345678901234567890123456789012345678901234567890123456789012345678901234567890

1
0        0       1        2        3        4        5        6        7        8
         12345678901234567890123456789012345678901234567890123456789012345678901234567890

 214        2  1.0    6    5   24    2     2.25   25    2     2.25   26    2     2.25
 215                            27    2     2.25   28    2     2.25
 216        3  1.0    7    5   29    3     2.25   30    3     2.25   31    3     2.25
 217                            32    3     2.25   33    3     2.25
 218        4  1.0    8    5   34    2     2.25   35    2     2.25   36    2     2.25
 219                            37    2     2.25   38    3     2.25
 220        5  1.0    9
 221        6  1.0    4
 222        1  1.0   10
 223        2  1.0   11
 224        3  1.0   12
 225        4  1.0   13
 226    calc     1
 227       0.
 228           30
 229    oper     1    0    3                                                  1
 230            0.     200.0       0.      .0198     200.0
 231       2
 232       0.  1.0  1.0  1.0
 233    outp     1
 234    endd
0        0       1        2        3        4        5        6        7        8
         12345678901234567890123456789012345678901234567890123456789012345678901234567890

1input for case     1         EXAMPLE PROBLEM  1 FOR COBRA-SFS                          date  86/11/25 time  15:58:31

 summary of input options
 group  n1   n2   n3   n4   n5   n6   n7   n8   n9  n10  n11  n12  n13  n14  n15
```

| | | | | | | | | | | | | | | | |
|---|---|---|---|---|---|---|---|---|---|---|---|---|---|---|---|
| prop | 11 | 3 | 0 | 0 | 0 | 0 | 0 | 0 | 0 | 0 | 0 | 0 | 0 | 0 | 0 |
| chan | 6 | 12 | 0 | 0 | 0 | 0 | 0 | 0 | 0 | 0 | 0 | 0 | 0 | 0 | 0 |
| rods | 1 | 1 | 1 | 0 | 0 | 0 | 0 | 0 | 0 | 0 | 0 | 0 | 0 | 0 | 0 |
| slab | 14 | 12 | 38 | 0 | 0 | 0 | 0 | 0 | 0 | 0 | 0 | 0 | 0 | 0 | 0 |
| radg | 6 | 1 | 2 | 0 | 0 | 0 | 0 | 0 | 0 | 0 | 0 | 0 | 0 | 0 | 0 |
| heat | 1 | 0 | 1 | 0 | 0 | 0 | 0 | 0 | 0 | 0 | 0 | 0 | 0 | 0 | 0 |
| drag | 2 | 0 | 0 | 0 | 0 | 0 | 0 | 0 | 0 | 0 | 0 | 0 | 0 | 0 | 0 |
| bdry | 13 | 1 | 5 | 1 | 0 | 0 | 0 | 0 | 0 | 0 | 0 | 0 | 0 | 0 | 0 |
| calc | 1 | 0 | 0 | 0 | 0 | 0 | 0 | 0 | 0 | 0 | 0 | 0 | 0 | 0 | 0 |
| oper | 1 | 0 | 3 | 0 | 0 | 0 | 0 | 0 | 0 | 0 | 0 | 0 | 0 | 1 | 0 |
| outp | 1 | 0 | 0 | 0 | 0 | 0 | 0 | 0 | 0 | 0 | 0 | 0 | 0 | 0 | 0 |
| endd | 0 | 0 | 0 | 0 | 0 | 0 | 0 | 0 | 0 | 0 | 0 | 0 | 0 | 0 | 0 |

fluid property table

| pliq (psia) | temliq (f) | hliq (btu/lbm) | conliq (btu/hr-ft-f) | cpliq (btu/lbm-f) | vliq (ft3/lbm) | visliq (lbm/hr-ft) |
|---|---|---|---|---|---|---|
| 0.0000 | 100.0000 | 133.9000 | 0.0154 | 0.2400 | 14.0800 | 0.0463 |
| 0.0000 | 200.0000 | 157.9000 | 0.0174 | 0.2410 | 16.6700 | 0.0518 |
| 0.0000 | 300.0000 | 182.1000 | 0.0193 | 0.2430 | 19.2300 | 0.0580 |
| 0.0000 | 400.0000 | 206.5000 | 0.0212 | 0.2450 | 21.7400 | 0.0630 |
| 0.0000 | 500.0000 | 231.1000 | 0.0231 | 0.2470 | 24.2700 | 0.0680 |
| 0.0000 | 600.0000 | 256.0000 | 0.0250 | 0.2500 | 26.8100 | 0.0720 |
| 0.0000 | 700.0000 | 281.1000 | 0.0268 | 0.2530 | 29.3300 | 0.0770 |
| 0.0000 | 800.0000 | 306.7000 | 0.0286 | 0.2560 | 31.8500 | 0.0810 |
| 0.0000 | 900.0000 | 332.5000 | 0.0303 | 0.2590 | 34.3600 | 0.0850 |
| 0.0000 | 1000.0000 | 358.6000 | 0.0319 | 0.2620 | 36.9000 | 0.0889 |
| 0.0000 | 2000.0000 | 617.2000 | 0.0471 | 0.2860 | 62.1100 | 0.1242 |

solid property table

| type | material | consol (btu/hr-ft-f) | cpsol (btu/hr-f) | rhosol (lbm/ft5) |
|---|---|---|---|---|
| 1 | alum | 119.00 | 0.0000 | 0.0000 |
| 2 | sstl | 9.40 | 0.0000 | 0.0000 |
| 3 | lead | 19.00 | 0.0000 | 0.0000 |

friction factor correlations

```
type  1   f=max of (   0.000*re**( 0.000) +   0.000*re**( 0.000) + 0.0000) or ( 100.000*re**(-1.000) +   0.000)
type  2   f=max of (   0.000*re**( 0.000) +   0.000*re**( 0.000) + 0.0000) or (  64.000*re**(-1.000) +   0.000)
```

heat transfer correlations

type 1 h= max of ( k/d(0.000*re**(0.000)*pr**(0.000) + 3.660) or ( k/d(0.000*re**(0.000)*pr**(0.000) + 3.660)

assembly number 1 input description

---

axial heat flux profile number 1 heat transfer correlation number 1

heat flux vs. time profile number 0 inlet flow vs. time profile number 0

subchannel input data for assembly number 1

| loc. ch. no. | glb. ch. no. | frictn factor type | area (sq-in) | wetted perim. (in) | heated perim. (in) | hydraulic diameter (in) | (adjacent channel no., momentum control volume width and length) | | | |
|---|---|---|---|---|---|---|---|---|---|---|
| 1 | 1 | 1 | 0.4278 | 1.8420 | 0.4422 | 0.9290 | ( 2, 0.418, 0.725) | ( 4, 0.418, 0.725) | ( 0, 0.000, 0.000) | ( 0, 0.000, 0.000) |
| 2 | 2 | 1 | 0.3936 | 1.6240 | 0.8844 | 0.9695 | ( 3, 0.418, 0.725) | ( 5, 0.177, 0.725) | ( 0, 0.000, 0.000) | ( 0, 0.000, 0.000) |
| 3 | 3 | 1 | 0.4278 | 1.8420 | 0.4422 | 0.9290 | ( 6, 0.418, 0.725) | ( 0, 0.000, 0.000) | ( 0, 0.000, 0.000) | ( 0, 0.000, 0.000) |
| 4 | 4 | 1 | 0.3936 | 1.6240 | 0.8844 | 0.9695 | ( 5, 0.177, 0.725) | ( 7, 0.418, 0.725) | ( 0, 0.000, 0.000) | ( 0, 0.000, 0.000) |
| 5 | 5 | 1 | 0.2987 | 1.7690 | 1.7690 | 0.6754 | ( 6, 0.177, 0.725) | ( 8, 0.177, 0.725) | ( 0, 0.000, 0.000) | ( 0, 0.000, 0.000) |
| 6 | 6 | 1 | 0.3936 | 1.6240 | 0.8844 | 0.9695 | ( 9, 0.418, 0.725) | ( 0, 0.000, 0.000) | ( 0, 0.000, 0.000) | ( 0, 0.000, 0.000) |
| 7 | 7 | 1 | 0.4278 | 1.8420 | 0.4422 | 0.9290 | ( 8, 0.418, 0.725) | ( 0, 0.000, 0.000) | ( 0, 0.000, 0.000) | ( 0, 0.000, 0.000) |
| 8 | 8 | 1 | 0.3936 | 1.6240 | 0.8844 | 0.9695 | ( 9, 0.418, 0.725) | ( 0, 0.000, 0.000) | ( 0, 0.000, 0.000) | ( 0, 0.000, 0.000) |
| 9 | 9 | 1 | 0.4278 | 1.8420 | 0.4422 | 0.9290 | ( 0, 0.000, 0.000) | ( 0, 0.000, 0.000) | ( 0, 0.000, 0.000) | ( 0, 0.000, 0.000) |

rod input data for assembly number 1

| local rod no. | global rod no. | type no. | diam (in) | radial power factor | fraction of power to adjacent channels (adj. channel no.) | | | | | |
|---|---|---|---|---|---|---|---|---|---|---|
| 1 | 1 | 1 | 0.0469 | 1.0000 | 0.2500 ( 1) | 0.2500 ( 2) | 0.2500 ( 4) | 0.2500 ( 5) | 0.0000 ( 0) | 0.0000 ( 0) |
| 2 | 2 | 1 | 0.0469 | 1.0000 | 0.2500 ( 2) | 0.2500 ( 3) | 0.2500 ( 5) | 0.2500 ( 6) | 0.0000 ( 0) | 0.0000 ( 0) |
| 3 | 3 | 1 | 0.0469 | 1.0000 | 0.2500 ( 4) | 0.2500 ( 5) | 0.2500 ( 7) | 0.2500 ( 8) | 0.0000 ( 0) | 0.0000 ( 0) |
| 4 | 4 | 1 | 0.0469 | 1.0000 | 0.2500 ( 5) | 0.2500 ( 6) | 0.2500 ( 8) | 0.2500 ( 9) | 0.0000 ( 0) | 0.0000 ( 0) |

assembly number 2 input description

---

axial heat flux profile number 1 heat transfer correlation number 1

heat flux vs. time profile number 0 inlet flow vs. time profile number 0

subchannel input data for assembly number 2

| loc. ch. no. | glb. ch. no. | frictn factor type | area (sq-in) | wetted perim. (in) | heated perim. (in) | hydraulic diameter (in) | (adjacent channel no., momentum control volume width and length) | | | |
|---|---|---|---|---|---|---|---|---|---|---|
| 1 | 10 | 1 | 0.4278 | 1.8420 | 0.4422 | 0.9290 | ( 2, 0.418, 0.725) | ( 4, 0.418, 0.725) | ( 0, 0.000, 0.000) | ( 0, 0.000, 0.000) |
| 2 | 11 | 1 | 0.3936 | 1.6240 | 0.8844 | 0.9695 | ( 3, 0.418, 0.725) | ( 5, 0.177, 0.725) | ( 0, 0.000, 0.000) | ( 0, 0.000, 0.000) |
| 3 | 12 | 1 | 0.4278 | 1.8420 | 0.4422 | 0.9290 | ( 6, 0.418, 0.725) | ( 0, 0.000, 0.000) | ( 0, 0.000, 0.000) | ( 0, 0.000, 0.000) |
| 4 | 13 | 1 | 0.3936 | 1.6240 | 0.8844 | 0.9695 | ( 5, 0.177, 0.725) | ( 7, 0.418, 0.725) | ( 0, 0.000, 0.000) | ( 0, 0.000, 0.000) |
| 5 | 14 | 1 | 0.2987 | 1.7690 | 1.7690 | 0.6754 | ( 6, 0.177, 0.725) | ( 8, 0.177, 0.725) | ( 0, 0.000, 0.000) | ( 0, 0.000, 0.000) |
| 6 | 15 | 1 | 0.3936 | 1.6240 | 0.8844 | 0.9695 | ( 9, 0.418, 0.725) | ( 0, 0.000, 0.000) | ( 0, 0.000, 0.000) | ( 0, 0.000, 0.000) |
| 7 | 16 | 1 | 0.4278 | 1.8420 | 0.4422 | 0.9290 | ( 8, 0.418, 0.725) | ( 0, 0.000, 0.000) | ( 0, 0.000, 0.000) | ( 0, 0.000, 0.000) |
| 8 | 17 | 1 | 0.3936 | 1.6240 | 0.8844 | 0.9695 | ( 9, 0.418, 0.725) | ( 0, 0.000, 0.000) | ( 0, 0.000, 0.000) | ( 0, 0.000, 0.000) |
| 9 | 18 | 1 | 0.4278 | 1.8420 | 0.4422 | 0.9290 | ( 0, 0.000, 0.000) | ( 0, 0.000, 0.000) | ( 0, 0.000, 0.000) | ( 0, 0.000, 0.000) |

rod input data for assembly number 2

| local rod no. | global rod no. | type no. | diam (in) | radial power factor | fraction of power to adjacent channels (adj. channel no.) | | | | | |
|---|---|---|---|---|---|---|---|---|---|---|
| 1 | 5 | 1 | 0.0469 | 1.0000 | 0.2500 ( 1) | 0.2500 ( 2) | 0.2500 ( 4) | 0.2500 ( 5) | 0.0000 ( 0) | 0.0000 ( 0) |
| 2 | 6 | 1 | 0.0469 | 1.0000 | 0.2500 ( 2) | 0.2500 ( 3) | 0.2500 ( 5) | 0.2500 ( 6) | 0.0000 ( 0) | 0.0000 ( 0) |
| 3 | 7 | 1 | 0.0469 | 1.0000 | 0.2500 ( 4) | 0.2500 ( 5) | 0.2500 ( 7) | 0.2500 ( 8) | 0.0000 ( 0) | 0.0000 ( 0) |
| 4 | 8 | 1 | 0.0469 | 1.0000 | 0.2500 ( 5) | 0.2500 ( 6) | 0.2500 ( 8) | 0.2500 ( 9) | 0.0000 ( 0) | 0.0000 ( 0) |

assembly number 3 input description

---

axial heat flux profile number 1 heat transfer correlation number 1

heat flux vs. time profile number 0 inlet flow vs. time profile number 0

subchannel input data for assembly number 3

| loc. ch. no. | glb. ch. no. | frictn factor type | area (sq-in) | wetted perim. (in) | heated perim. (in) | hydraulic diameter (in) | (adjacent channel no., momentum control volume width and length) | | | |
|---|---|---|---|---|---|---|---|---|---|---|
| 1 | 19 | 2 | 2.0860 | 6.7900 | 0.0000 | 1.2289 | ( 0, 0.000, 0.000) | ( 0, 0.000, 0.000) | ( 0, 0.000, 0.000) | ( 0, 0.000, 0.000) |

rod input data for assembly number 3

| local rod no. | global rod no. | type no. | diam (in) | radial power factor | fraction of power to adjacent channels (adj. channel no.) |
|---|---|---|---|---|---|

```
assembly number   4 input description
---------------------------------------
axial heat flux profile number     1          heat transfer correlation number    1
heat flux vs. time profile number  0          inlet flow vs. time profile number  0

subchannel input data for assembly number    4
loc. glb. frictn  area     wetted   heated  hydraulic     (adjacent channel no., momentum control volume width and length)
ch.  ch.  factor  (sq-in)  perim.   perim.  diameter
no.  no.   type            (in)     (in)     (in)
  1   20    2    2.0860   6.7900   0.0000   1.2289    (  0, 0.000, 0.000)(  0, 0.000, 0.000)(  0, 0.000, 0.000)(  0, 0.000, 0.000)

rod input data for assembly number   4
local    global   type  diam  radial power      fraction of power to adjacent channels (adj. channel no.)
rod no.  rod no.   no.  (in)     factor
```

```
assembly number   5 input description
---------------------------------------
axial heat flux profile number     1          heat transfer correlation number    1
heat flux vs. time profile number  0          inlet flow vs. time profile number  0

subchannel input data for assembly number    5
loc. glb. frictn  area     wetted   heated  hydraulic     (adjacent channel no., momentum control volume width and length)
ch.  ch.  factor  (sq-in)  perim.   perim.  diameter
no.  no.   type            (in)     (in)     (in)
  1   21    2    2.0860   6.7900   0.0000   1.2289    (  0, 0.000, 0.000)(  0, 0.000, 0.000)(  0, 0.000, 0.000)(  0, 0.000, 0.000)

rod input data for assembly number   5
local    global   type  diam  radial power      fraction of power to adjacent channels (adj. channel no.)
rod no.  rod no.   no.  (in)     factor
```

```
assembly number   6 input description
---------------------------------------
axial heat flux profile number     1          heat transfer correlation number    1
```

heat flux vs. time profile number 0 inlet flow vs. time profile number 0

subchannel input data for assembly number 6

| loc. ch. no. | glb. ch. no. | frictn factor type | area (sq-in) | wetted perim. (in) | heated perim. (in) | hydraulic diameter (in) | (adjacent channel no., momentum control volume width and length) |
|---|---|---|---|---|---|---|---|
| 1 | 22 | 2 | 2.0000 | 6.7900 | 0.0000 | 1.2289 | ( 0, 0.000, 0.000)( 0, 0.000, 0.000)( 0, 0.000, 0.000)( 0, 0.000, 0.000) |

rod input data for assembly number 6

| local rod no. | global rod no. | type no. | diam (in) | radial power factor | fraction of power to adjacent channels (adj. channel no.) |
|---|---|---|---|---|---|

thermal properties of fuel material 1 order of collocation

| | fuel properties | | | | clad properties | | | | | | | | | | |
|---|---|---|---|---|---|---|---|---|---|---|---|---|---|---|---|
| type no. | cond. (b/hr-ft-f) | sp. heat (b/lb-f) | density (lb/ft3) | thick. (in.) | gap cond. (b/hr-ft-f) | (b/lb-f) | (lb/ft3) | (in.) | (b/hr-ft2-f) | (in.) | col geom | sym | idtyp, | rod diam | |
| 1 | 1.00 | 1.0000 | 1.0 | 0.5630 | 1.00 | 1.0000 | 1.0 | 1.0000 | 1.00 | 1 | 1 | 1 | 1 | 0.5630 | |

1

solid-to-fluid thermal connection type table

| connection type | slab-fluid resistance (ft-f-s/btu) | slab wetted perimeter (in) |
|---|---|---|
| 1 | 11.16 | 0.70 |
| 2 | 20.88 | 0.37 |
| 3 | 5.76 | 0.70 |
| 4 | 10.44 | 0.37 |
| 5 | 7.28 | 1.07 |
| 6 | 3.27 | 1.19 |
| 7 | 6.48 | 1.19 |
| 8 | 124.60 | 1.03 |
| 9 | 52.56 | 1.93 |
| 10 | 157.70 | 0.64 |
| 11 | 48.24 | 2.32 |
| 12 | 15.48 | 0.50 |

1

solid-to-solid thermal connection type table

| connection type | slab-slab resistance -series- (ft-f-s/btu) | slab-slab resistance -parallel- (ft-f-s/btu) | em1 | em2 | arad (in) |
|---|---|---|---|---|---|
| 1 | 102.80 | 0.00 | 0.00 | 0.00 | 0.00 |
| 2 | 47.50 | 0.00 | 0.00 | 0.00 | 0.00 |
| 3 | 64.74 | 0.00 | 0.00 | 0.00 | 0.00 |
| 4 | 47.50 | 0.00 | 0.00 | 0.00 | 0.00 |
| 5 | 95.00 | 0.00 | 0.00 | 0.00 | 0.00 |
| 6 | 129.50 | 0.00 | 0.00 | 0.00 | 0.00 |
| 7 | 51.40 | 0.00 | 0.00 | 0.00 | 0.00 |
| 8 | 2089.00 | 0.00 | 0.00 | 0.00 | 0.00 |
| 9 | 99.60 | 0.00 | 0.00 | 0.00 | 0.00 |
| 10 | 273.20 | 0.00 | 0.00 | 0.00 | 0.00 |
| 11 | 8655.00 | 0.00 | 0.00 | 0.00 | 0.00 |
| 12 | 504.00 | 172.20 | 0.20 | 0.25 | 0.25 |
| 13 | 252.00 | 86.40 | 0.20 | 0.25 | 0.50 |
| 14 | 66.24 | 0.00 | 0.00 | 0.00 | 0.00 |

1

slab thermal connections

| slab no. | mat. typ. | area (in2) | heat gen. (btu/cu.ft.-s) | power profile | solid connections (connected node,type) | | | | fluid connections (adjacent assembly,channel,type) | | |
|---|---|---|---|---|---|---|---|---|---|---|---|
| 1 | 1 | 0.149 | 0.000 | 0 | ( 2, 1) | ( 24, 12) | ( 0, 0) | ( 0, 0) | ( 3, 1, 6) | ( 0, 0, 0) | ( 0, 0, 0) |
| 2 | 1 | 0.125 | 0.000 | 0 | ( 3, 2) | ( 6, 5) | ( 1, 1) | ( 0, 0) | ( 0, 0, 0) | ( 0, 0, 0) | ( 0, 0, 0) |
| 3 | 1 | 0.535 | 0.000 | 0 | ( 4, 3) | ( 2, 2) | ( 0, 0) | ( 0, 0) | ( 1, 1, 1) | ( 1, 2, 2) | ( 3, 1, 5) |
| 4 | 1 | 0.535 | 0.000 | 0 | ( 5, 4) | ( 3, 3) | ( 0, 0) | ( 0, 0) | ( 1, 2, 2) | ( 1, 3, 1) | ( 3, 1, 5) |
| 5 | 1 | 0.250 | 0.000 | 0 | ( 7, 4) | ( 4, 4) | ( 0, 0) | ( 0, 0) | ( 3, 1,12) | ( 4, 1,12) | ( 0, 0, 0) |
| 6 | 1 | 0.267 | 0.000 | 0 | ( 8, 6) | ( 2, 5) | ( 0, 0) | ( 0, 0) | ( 1, 1, 3) | ( 1, 4, 4) | ( 0, 0, 0) |
| 7 | 1 | 0.535 | 0.000 | 0 | ( 9, 3) | ( 5, 4) | ( 0, 0) | ( 0, 0) | ( 1, 3, 1) | ( 1, 6, 2) | ( 4, 1, 5) |
| 8 | 1 | 0.267 | 0.000 | 0 | ( 10, 5) | ( 6, 6) | ( 0, 0) | ( 0, 0) | ( 1, 4, 4) | ( 1, 7, 3) | ( 0, 0, 0) |
| 9 | 1 | 0.535 | 0.000 | 0 | ( 13, 4) | ( 7, 3) | ( 0, 0) | ( 0, 0) | ( 1, 6, 2) | ( 1, 9, 1) | ( 4, 1, 5) |
| 10 | 1 | 0.125 | 0.000 | 0 | ( 11, 2) | ( 15, 5) | ( 8, 5) | ( 0, 0) | ( 0, 0, 0) | ( 0, 0, 0) | ( 0, 0, 0) |

| | | | | | | | | | | | | |
|---|---|---|---|---|---|---|---|---|---|---|---|---|
| 11 | 1 | 0.535 | 0.000 | 0 | ( 12, 3) | ( 10, 2) | ( 0, 0) | ( 0, 0) | ( 1, 7, 1) | ( 1, 8, 2) | ( 2, 1, 1) |
| | | | | | ( 0, 0) | ( 0, 0) | ( 0, 0) | ( 0, 0) | ( 2, 2, 2) | ( 0, 0, 0) | ( 0, 0, 0) |
| 12 | 1 | 0.535 | 0.000 | 0 | ( 13, 4) | ( 11, 3) | ( 0, 0) | ( 0, 0) | ( 1, 8, 2) | ( 1, 9, 1) | ( 2, 2, 2) |
| | | | | | ( 0, 0) | ( 0, 0) | ( 0, 0) | ( 0, 0) | ( 2, 3, 1) | ( 0, 0, 0) | ( 0, 0, 0) |
| 13 | 1 | 0.250 | 0.000 | 0 | ( 14, 7) | ( 16, 4) | ( 9, 4) | ( 12, 4) | ( 0, 0, 0) | ( 0, 0, 0) | ( 0, 0, 0) |
| 14 | 1 | 0.297 | 0.000 | 0 | ( 26, 13) | ( 13, 7) | ( 0, 0) | ( 0, 0) | ( 4, 1, 7) | ( 5, 1, 7) | ( 0, 0, 0) |
| 15 | 1 | 0.267 | 0.000 | 0 | ( 17, 6) | ( 10, 5) | ( 0, 0) | ( 0, 0) | ( 2, 1, 3) | ( 2, 4, 4) | ( 0, 0, 0) |
| 16 | 1 | 0.535 | 0.000 | 0 | ( 18, 3) | ( 13, 4) | ( 0, 0) | ( 0, 0) | ( 2, 3, 1) | ( 2, 6, 2) | ( 5, 1, 5) |
| 17 | 1 | 0.267 | 0.000 | 0 | ( 19, 5) | ( 15, 6) | ( 0, 0) | ( 0, 0) | ( 2, 4, 4) | ( 2, 7, 3) | ( 0, 0, 0) |
| 18 | 1 | 0.535 | 0.000 | 0 | ( 22, 4) | ( 16, 3) | ( 0, 0) | ( 0, 0) | ( 2, 6, 2) | ( 2, 9, 1) | ( 5, 1, 5) |
| 19 | 1 | 0.125 | 0.000 | 0 | ( 20, 2) | ( 23, 1) | ( 17, 5) | ( 0, 0) | ( 0, 0, 0) | ( 0, 0, 0) | ( 0, 0, 0) |
| 20 | 1 | 0.535 | 0.000 | 0 | ( 21, 3) | ( 19, 2) | ( 0, 0) | ( 0, 0) | ( 2, 7, 1) | ( 2, 8, 2) | ( 6, 1, 5) |
| 21 | 1 | 0.535 | 0.000 | 0 | ( 22, 4) | ( 20, 3) | ( 0, 0) | ( 0, 0) | ( 2, 8, 2) | ( 2, 9, 1) | ( 6, 1, 5) |
| 22 | 1 | 0.250 | 0.000 | 0 | ( 18, 4) | ( 21, 4) | ( 0, 0) | ( 0, 0) | ( 5, 1,12) | ( 6, 1,12) | ( 0, 0, 0) |
| 23 | 1 | 0.149 | 0.000 | 0 | ( 28, 12) | ( 19, 1) | ( 0, 0) | ( 0, 0) | ( 6, 1, 6) | ( 0, 0, 0) | ( 0, 0, 0) |
| 24 | 2 | 1.363 | 0.000 | 0 | ( 25, 8) | ( 29, 9) | ( 1, 12) | ( 0, 0) | ( 3, 1,11) | ( 0, 0, 0) | ( 0, 0, 0) |
| 25 | 2 | 1.363 | 0.000 | 0 | ( 26, 8) | ( 30, 9) | ( 24, 8) | ( 0, 0) | ( 3, 1,10) | ( 4, 1, 9) | ( 0, 0, 0) |
| 26 | 2 | 1.363 | 0.000 | 0 | ( 27, 8) | ( 31, 9) | ( 14, 13) | ( 25, 8) | ( 4, 1, 8) | ( 5, 1, 8) | ( 0, 0, 0) |
| 27 | 2 | 1.363 | 0.000 | 0 | ( 28, 8) | ( 32, 9) | ( 26, 8) | ( 0, 0) | ( 5, 1, 9) | ( 6, 1,10) | ( 0, 0, 0) |
| 28 | 2 | 1.363 | 0.000 | 0 | ( 33, 9) | ( 23, 12) | ( 27, 8) | ( 0, 0) | ( 6, 1,11) | ( 0, 0, 0) | ( 0, 0, 0) |
| 29 | 3 | 9.169 | 0.000 | 0 | ( 30, 10) | ( 34, 14) | ( 24, 9) | ( 0, 0) | ( 0, 0, 0) | ( 0, 0, 0) | ( 0, 0, 0) |
| 30 | 3 | 9.169 | 0.000 | 0 | ( 31, 10) | ( 35, 14) | ( 25, 9) | ( 29, 10) | ( 0, 0, 0) | ( 0, 0, 0) | ( 0, 0, 0) |
| 31 | 3 | 9.169 | 0.000 | 0 | ( 32, 10) | ( 36, 14) | ( 26, 9) | ( 30, 10) | ( 0, 0, 0) | ( 0, 0, 0) | ( 0, 0, 0) |
| 32 | 3 | 9.169 | 0.000 | 0 | ( 33, 10) | ( 37, 14) | ( 27, 9) | ( 31, 10) | ( 0, 0, 0) | ( 0, 0, 0) | ( 0, 0, 0) |
| 33 | 3 | 9.169 | 0.000 | 0 | ( 38, 14) | ( 28, 9) | ( 32, 10) | ( 0, 0) | ( 0, 0, 0) | ( 0, 0, 0) | ( 0, 0, 0) |
| 34 | 2 | 0.547 | 0.000 | 0 | ( 35, 11) | ( 29, 14) | ( 0, 0) | ( 0, 0) | ( 0, 0, 0) | ( 0, 0, 0) | ( 0, 0, 0) |
| 35 | 2 | 0.547 | 0.000 | 0 | ( 36, 11) | ( 30, 14) | ( 34, 11) | ( 0, 0) | ( 0, 0, 0) | ( 0, 0, 0) | ( 0, 0, 0) |
| 36 | 2 | 0.547 | 0.000 | 0 | ( 37, 11) | ( 31, 14) | ( 35, 11) | ( 0, 0) | ( 0, 0, 0) | ( 0, 0, 0) | ( 0, 0, 0) |
| 37 | 2 | 0.547 | 0.000 | 0 | ( 38, 11) | ( 32, 14) | ( 36, 11) | ( 0, 0) | ( 0, 0, 0) | ( 0, 0, 0) | ( 0, 0, 0) |
| 38 | 2 | 0.547 | 0.000 | 0 | ( 33, 14) | ( 37, 11) | ( 0, 0) | ( 0, 0) | ( 0, 0, 0) | ( 0, 0, 0) | ( 0, 0, 0) |

boundary thermal input data

---

boundary thermal connection type table

| type | conduction/convection component (btu/s) | radiation component (btu/s) |
|---|---|---|
| 1 | q = 3.16800e-01 *(dt** 1.000) | q = sigma * 0.000 * (ts**4 - tamb**4) |
| 2 | q = 7.18760e-03 *(dt** 1.280) | q = sigma * 0.000 * (ts**4 - tamb**4) |
| 3 | q = 1.58400e-01 *(dt** 1.000) | q = sigma * 0.000 * (ts**4 - tamb**4) |
| 4 | q = 5.52159e-05 *(dt** 1.333) | q = sigma * 0.250 * (ts**4 - tamb**4) |

| | | |
|---|---|---|
| 5 | q = 1.58400e-02 *(dt** 1.000) | q = sigma * 0.000 * (ts**4 - tamb**4) |
| 6 | q = 6.33600e-02 *(dt** 1.000) | q = sigma * 0.000 * (ts**4 - tamb**4) |
| 7 | q = 2.59200e-02 *(dt** 1.000) | q = sigma * 0.000 * (ts**4 - tamb**4) |
| 8 | q = 1.58400e-01 *(dt** 1.000) | q = sigma * 0.000 * (ts**4 - tamb**4) |
| 9 | q = 1.44000e-02 *(dt** 1.000) | q = sigma * 0.000 * (ts**4 - tamb**4) |
| 10 | q = 6.62400e-02 *(dt** 1.000) | q = sigma * 0.000 * (ts**4 - tamb**4) |
| 11 | q = 3.16800e-02 *(dt** 1.000) | q = sigma * 0.000 * (ts**4 - tamb**4) |
| 12 | q = 2.16000e-02 *(dt** 1.000) | q = sigma * 0.000 * (ts**4 - tamb**4) |
| 13 | q = 5.95278e-05 *(dt** 1.333) | q = sigma * 0.250 * (ts**4 - tamb**4) |

boundary temperature type table 1

| x/l | tamb |
|---|---|
| 0.000 | 125.0 |
| 1.000 | 125.0 |

boundary node data

| boundary node | heated perim | heat flux (b/hr-ft2) | boundary temp. type | boundary region no. | interface area multiplier | axial zone end elevation (x/l),boundary thermal, connection type) |
|---|---|---|---|---|---|---|
| 34 | 4.58 | 0.000 | 1 | 1 | 1.000 | (1.000, 1) (0.000, 0) (0.000, 0) (0.000, 0) (0.000, 0) (0.000, 0) |
| | | | | 2 | 1.624 | (1.000, 2) (0.000, 0) (0.000, 0) (0.000, 0) (0.000, 0) (0.000, 0) |
| | | | | 3 | 1.695 | (1.000, 3) (0.000, 0) (0.000, 0) (0.000, 0) (0.000, 0) (0.000, 0) |
| | | | | 4 | 1.695 | (1.000, 4) (0.000, 0) (0.000, 0) (0.000, 0) (0.000, 0) (0.000, 0) |
| 35 | 4.58 | 0.000 | 1 | 1 | 1.000 | (1.000, 1) (0.000, 0) (0.000, 0) (0.000, 0) (0.000, 0) (0.000, 0) |
| | | | | 2 | 1.624 | (1.000, 2) (0.000, 0) (0.000, 0) (0.000, 0) (0.000, 0) (0.000, 0) |
| | | | | 3 | 1.695 | (1.000, 3) (0.000, 0) (0.000, 0) (0.000, 0) (0.000, 0) (0.000, 0) |
| | | | | 4 | 1.695 | (1.000, 4) (0.000, 0) (0.000, 0) (0.000, 0) (0.000, 0) (0.000, 0) |
| 36 | 4.58 | 0.000 | 1 | 1 | 1.000 | (1.000, 1) (0.000, 0) (0.000, 0) (0.000, 0) (0.000, 0) (0.000, 0) |
| | | | | 2 | 1.624 | (1.000, 2) (0.000, 0) (0.000, 0) (0.000, 0) (0.000, 0) (0.000, 0) |
| | | | | 3 | 1.695 | (1.000, 3) (0.000, 0) (0.000, 0) (0.000, 0) (0.000, 0) (0.000, 0) |
| | | | | 4 | 1.695 | (1.000, 4) (0.000, 0) (0.000, 0) (0.000, 0) (0.000, 0) (0.000, 0) |
| 37 | 4.58 | 0.000 | 1 | 1 | 1.000 | (1.000, 1) (0.000, 0) (0.000, 0) (0.000, 0) (0.000, 0) (0.000, 0) |
| | | | | 2 | 1.624 | (1.000, 2) (0.000, 0) (0.000, 0) (0.000, 0) (0.000, 0) (0.000, 0) |
| | | | | 3 | 1.695 | (1.000, 3) (0.000, 0) (0.000, 0) (0.000, 0) (0.000, 0) (0.000, 0) |
| | | | | 4 | 1.695 | (1.000, 4) (0.000, 0) (0.000, 0) (0.000, 0) (0.000, 0) (0.000, 0) |
| 38 | 4.58 | 0.000 | 1 | 1 | 1.000 | (1.000, 1) (0.000, 0) (0.000, 0) (0.000, 0) (0.000, 0) (0.000, 0) |
| | | | | 2 | 1.624 | (1.000, 2) (0.000, 0) (0.000, 0) (0.000, 0) (0.000, 0) (0.000, 0) |
| | | | | 3 | 1.695 | (1.000, 3) (0.000, 0) (0.000, 0) (0.000, 0) (0.000, 0) (0.000, 0) |
| | | | | 4 | 1.695 | (1.000, 4) (0.000, 0) (0.000, 0) (0.000, 0) (0.000, 0) (0.000, 0) |

plenum region boundary data

upper plenum
side h. t. area (in2) = 12.800
side heat flux (b/hr-ft2) = 0.000
side boundary temp. (f) =125.000
side boundary region data

| region no. | area mult. | conn. type |
|---|---|---|
| 1 | 1.000 | 5 |
| 2 | 1.000 | 6 |
| 3 | 1.000 | 7 |
| 4 | 1.000 | 8 |
| 5 | 1.000 | 9 |
| 6 | 1.000 | 4 |

upper plenum
axial h. t. area (in2) = 26.200
axial heat flux (b/hr-ft2) = 0.000
axial boundary temp. (f) =125.000
axial boundary region data

| region no. | area mult. | conn. type |
|---|---|---|
| 1 | 1.000 | 10 |
| 2 | 1.000 | 11 |
| 3 | 1.000 | 12 |
| 4 | 1.000 | 13 |

plenum-slab axial heat transfer data

| plenum | location | region no. | material type | connected slab node | h.t. area (in2) | connection length (in) |
|---|---|---|---|---|---|---|
| upper | side | 2 | 2 | 24 | 1.363 | 2.250 |
| upper | side | 2 | 2 | 25 | 1.363 | 2.250 |
| upper | side | 2 | 2 | 26 | 1.363 | 2.250 |
| upper | side | 2 | 2 | 27 | 1.363 | 2.250 |
| upper | side | 2 | 2 | 28 | 1.363 | 2.250 |
| upper | side | 3 | 3 | 29 | 9.169 | 2.250 |
| upper | side | 3 | 3 | 30 | 9.169 | 2.250 |
| upper | side | 3 | 3 | 31 | 9.169 | 2.250 |
| upper | side | 3 | 3 | 32 | 9.169 | 2.250 |

| | | | | | | |
|---|---|---|---|---|---|---|
| upper | side | 3 | 3 | 33 | 9.169 | 2.250 |
| upper | side | 4 | 2 | 34 | 0.547 | 2.250 |
| upper | side | 4 | 2 | 35 | 0.547 | 2.250 |
| upper | side | 4 | 2 | 36 | 0.547 | 2.250 |
| upper | side | 4 | 2 | 37 | 0.547 | 2.250 |
| upper | side | 4 | 3 | 38 | 0.547 | 2.250 |

assembly radiation summary

---

| assembly no. | radiation group type | radiation surface slab no. ( 1) | ( 2) | ( 3) | ( 4) | ( 5) | ( 6) | ( 7) | ( 8) | ( |
|---|---|---|---|---|---|---|---|---|---|---|
| 1 | 1 | 3 | 4 | 7 | 9 | 12 | 11 | 8 | 6 | |
| 2 | 1 | 11 | 12 | 16 | 18 | 21 | 20 | 17 | 15 | |
| 3 | -1 | 1 | 3 | 4 | 5 | 25 | 24 | | | |
| 4 | -2 | 14 | 9 | 7 | 5 | 25 | 26 | | | |
| 5 | -2 | 14 | 16 | 18 | 22 | 27 | 26 | | | |
| 6 | -1 | 23 | 20 | 21 | 22 | 27 | 28 | | | |

calculation parameters

| | |
|---|---|
| lateral resistance factor | 0.5000 |
| s/l parameter | 0.5000 |
| turbulent momentum factor | 0.0000 |
| channel orientation (degrees) | 0.0000 |
| channel length (inches) | 30.0000 |
| number of axial nodes | 12 |
| total transient time (seconds) | 0.0000 |
| number of time steps | 0 |
| nominal time step (seconds) | ********* |
| roll option (0 - no roll) | 0 |

data for implicit solution

| | |
|---|---|
| external iteration limit | 30 |
| convergence factors | |
| internal (dp/p) | 0.00100 |
| energy (dh/h) | 0.00100 |
| acceleration factors | |
| crossflow solution | 1.60000 |

| | |
|---|---|
| lateral delta-p | 0.80000 |
| flow | 0.70000 |
| density | 1.00000 |
| slab energy | 1.20000 |

axial noding

| node no. | integral height (in.) | nodal length (in.) | node no. | integral height (in.) | nodal length (in.) | node no. | integral height (in.) | nodal length (in.) |
|---|---|---|---|---|---|---|---|---|
| 1 | 0.0- 2.5 | 2.500 | 2 | 2.5- 5.0 | 2.500 | 3 | 5.0- 7.5 | 2.500 |
| 4 | 7.5- 10.0 | 2.500 | 5 | 10.0- 12.5 | 2.500 | 6 | 12.5- 15.0 | 2.500 |
| 7 | 15.0- 17.5 | 2.500 | 8 | 17.5- 20.0 | 2.500 | 9 | 20.0- 22.5 | 2.500 |
| 10 | 22.5- 25.0 | 2.500 | 11 | 25.0- 27.5 | 2.500 | 12 | 27.5- 30.0 | 2.500 |

0mixing parameters

| assembly type no. | mixing correlation | mixing coefficients abeta | bbeta | conduction mixing geometry factor |
|---|---|---|---|---|
| 1 | 0 | 0.000 | 0.000 | 1.000 |
| 2 | 0 | 0.000 | 0.000 | 1.000 |

operating conditions

| | | |
|---|---|---|
| system pressure | = | 0.0 psia |
| inlet enthalpy | = | 157.9 btu/lbm |
| inlet temperature | = | 200.000 degrees f |
| nominal mass flux | = | 0.000 million lbm/ft2-hr |
| nominal power density | = | 0.0198 million btu/hr-ft3 |
| exit enthalpy | = | 200.0 btu/lbm |

uniform inlet temperature

specified total flow = 0.000 lbm/sec, equal pressure drop along each flow path

1

parameter summary

| parameter | description | dimensioned for | amount used |
|---|---|---|---|
| id | max. no. of solid material property types | 6 | 3 |
| if | max. no. of boundary thermal connection types | 15 | 13 |
| lip | max. no. of radial boundary regions | 8 | 7 |

| | | | |
|---|---|---|---|
| iq | max. no. of circumferential boundary nodes | 7 | 5 |
| lit | max. no. of assembly types | 3 | 2 |
| iu | max. no. of assemblies | 6 | 6 |
| iw | max. no. of loss coeff. profiles, friction factor or heat transfer corr. | 6 | 2 |
| iz | max. no. of slab-slab and slab-fluid connection types | 15 | 14 |
| ma | max. no. of channels with area variations | 20 | 0 |
| mc | max. no. of channels | 30 | 22 |
| me | mx if not using roll option; 3 if roll is used | 40 | 13 |
| mg | max. no. of channel gap connections | 55 | 24 |
| mh | max. no. of slab-slab solid connections | 11 | 2 |
| mj | max. no. of assembly groupings in network model | 1 | 0 |
| mk | max. no. of loss coefficients | 3 | 0 |
| ml | max. no. of axial locations for gap and area variations | 9 | 0 |
| lmm | max. no. of points in selected profile tables | 29 | 0 |
| mn | max. no. of fuel nodes in a rod | 6 | 2 |
| mp | max. no. of entries in property, axial heat flux or transient tables | 31 | 11 |
| mq | max. no. of channel groups that have local axial losses | 40 | 0 |
| mr | max. no. of fuel rods | 50 | 8 |
| ms | max. no. of gaps that can have gap spacing variations | 30 | 0 |
| mt | max. no. of fuel types | 10 | 1 |
| mv | max. no. of axial heat flux profiles | 6 | 1 |
| mw | max. no. of slab nodes | 60 | 38 |
| mx | max. no. of axial nodes plus one | 40 | 13 |
| my | max. no. of axial fuel type divisions | 4 | 0 |
| nd | max. no. of fluid channels connected to a wall node | 9 | 4 |
| no | max. no. of boundary temperature types | 1 | 1 |
| nv | max. no. of user-defined radiation groups | 2 | 2 |
| lnz | max. no. of surfaces in a user-defined radiation group | 10 | 6 |
| la | no. of radiation surfaces in enclosure type 1 | 15 | 12 |
| lb | no. of radiation surfaces in enclosure type 2 | 1 | 0 |
| llc | no. of radiation surfaces in enclosure type 3 | 1 | 0 |
| ld | no. of radiation surfaces in enclosure type 4 | 1 | 0 |
| le | no. of radiation surfaces in enclosure type 5 | 1 | 0 |
| lf | no. of radiation surfaces in enclosure type 6 | 1 | 0 |

total heat generation in the problem is 0.19017 btu/sec or 0.20059 kw

data from iterative solution using the recirculation module

time = 0.0000 dt = ****** implicit dt = 0.0000 explicit dt = 0.1976 mode = 0

| iteration no. | sweep no. | peak clad temp(f) | peak clad fluid | peak clad rod | peak clad ass. | total flow (lbm/s) | pressure drop(psi) | error total energy | error flow | error fluid energy | error rod energy |
|---|---|---|---|---|---|---|---|---|---|---|---|
| 1 | 1 | 475.7 | 13 | 1 | 2 | 0.707e-12 | 0.0010115 | -0.0053 | 1.0391 | 0.1343 | 0.0038 |
| | 2 | 475.8 | 13 | 1 | 2 | | | -0.0010 | 1.0391 | 0.1362 | 0.0021 |
| 2 | 1 | 475.7 | 13 | 1 | 2 | 0.376e-12 | 0.0010332 | 0.0255 | 1.8751 | 0.1023 | 0.0026 |
| | 2 | 447.4 | 13 | 3 | 1 | | | 0.0073 | 1.8751 | 0.0069 | 0.0015 |
| 3 | 1 | 448.4 | 13 | 3 | 1 | 0.211e-12 | 0.0010101 | 0.0022 | 0.3508 | 0.0192 | 0.0002 |
| | 2 | 457.3 | 13 | 3 | 1 | | | -0.0012 | 0.3508 | 0.0013 | 0.0004 |
| 4 | 1 | 457.1 | 13 | 3 | 1 | 0.720e-13 | 0.0010093 | 0.0185 | 0.1923 | 0.0026 | 0.0002 |
| | 2 | 457.3 | 13 | 3 | 1 | | | 0.0157 | 0.1923 | 0.0005 | 0.0001 |
| 5 | 1 | 457.4 | 13 | 3 | 1 | -0.193e-13 | 0.0010086 | 0.0146 | 0.1109 | 0.0014 | 0.0000 |
| | 2 | 458.5 | 13 | 3 | 1 | | | 0.0131 | 0.1109 | 0.0003 | 0.0001 |
| 6 | 1 | 458.5 | 13 | 3 | 1 | -0.601e-13 | 0.0010089 | 0.0121 | 0.0636 | 0.0011 | 0.0000 |
| | 2 | 459.4 | 13 | 3 | 1 | | | 0.0110 | 0.0636 | 0.0002 | 0.0000 |
| 7 | 1 | 459.6 | 13 | 3 | 1 | -0.662e-13 | 0.0010088 | 0.0060 | 0.0513 | 0.0006 | 0.0001 |
| | 2 | 460.5 | 13 | 3 | 1 | | | 0.0048 | 0.0513 | 0.0002 | 0.0000 |
| 8 | 1 | 460.6 | 13 | 3 | 1 | -0.550e-13 | 0.0010088 | 0.0043 | 0.0349 | 0.0007 | 0.0000 |
| | 2 | 461.0 | 13 | 3 | 1 | | | 0.0036 | 0.0349 | 0.0002 | 0.0000 |
| 9 | 1 | 461.0 | 13 | 3 | 1 | -0.394e-13 | 0.0010089 | 0.0031 | 0.0219 | 0.0005 | 0.0000 |
| | 2 | 461.3 | 13 | 3 | 1 | | | 0.0026 | 0.0219 | 0.0002 | 0.0000 |
| 10 | 1 | 461.3 | 13 | 3 | 1 | -0.259e-13 | 0.0010088 | -0.0006 | 0.0153 | 0.0004 | 0.0000 |

| | | | | | | | | | | | |
|---|---|---|---|---|---|---|---|---|---|---|---|
| | 2 | 461.6 | 13 | 3 | 1 | | | -0.0009 | 0.0153 | 0.0002 | 0.0000 |
| 11 | 1 | 461.6 | 13 | 3 | 1 | -0.156e-13 | 0.0010089 | -0.0011 | 0.0099 | 0.0003 | 0.0000 |
| | 2 | 461.8 | 13 | 3 | 1 | | | -0.0014 | 0.0099 | 0.0001 | 0.0000 |
| 12 | 1 | 461.8 | 13 | 3 | 1 | -0.887e-14 | 0.0010090 | -0.0015 | 0.0068 | 0.0002 | 0.0000 |
| | 2 | 461.9 | 13 | 3 | 1 | | | -0.0017 | 0.0068 | 0.0001 | 0.0000 |
| 13 | 1 | 461.9 | 13 | 3 | 1 | -0.465e-14 | 0.0010092 | -0.0018 | 0.0047 | 0.0001 | 0.0000 |
| | 2 | 461.9 | 13 | 3 | 1 | | | -0.0009 | 0.0047 | 0.0001 | 0.0000 |
| 14 | 1 | 461.9 | 13 | 3 | 1 | -0.239e-14 | 0.0010092 | -0.0009 | 0.0034 | 0.0002 | 0.0000 |
| | 2 | 462.0 | 13 | 3 | 1 | | | -0.0009 | 0.0034 | 0.0001 | 0.0000 |

cobra-sfs code results
case 1 EXAMPLE PROBLEM 1 FOR COBRA-SFS date 86/11/25 time 16:00:41

calculated fluid conditions at time = 0.0000 seconds pressure = 0.0 psia
channel 1
assembly 1

| distance (in.) | delta-p (psi) | enthalpy (btu/lb) | temperature (deg-f) | density (lb/cu-ft) | flow (lb/sec) | mass flux (mlb/hr-ft2) | velocity (ft/sec) | area (sq-in) |
|---|---|---|---|---|---|---|---|---|
| 0.0 | 0.0010092 | 159.52 | 206.68 | 0.0603 | 0.0000837 | 0.0001015 | 0.4673487 | 0.42780 |
| 2.5 | 0.0009181 | 162.61 | 219.47 | 0.0591 | 0.0000837 | 0.0001015 | 0.4766058 | 0.42780 |
| 5.0 | 0.0008312 | 165.18 | 230.08 | 0.0582 | 0.0000837 | 0.0001015 | 0.4842604 | 0.42780 |
| 7.5 | 0.0007453 | 167.34 | 239.00 | 0.0574 | 0.0000837 | 0.0001015 | 0.4906933 | 0.42780 |
| 10.0 | 0.0006603 | 169.18 | 246.60 | 0.0568 | 0.0000837 | 0.0001015 | 0.4961749 | 0.42780 |
| 12.5 | 0.0005761 | 170.76 | 253.16 | 0.0563 | 0.0000837 | 0.0001015 | 0.5009073 | 0.42780 |
| 15.0 | 0.0004925 | 172.15 | 258.88 | 0.0558 | 0.0000837 | 0.0001015 | 0.5050369 | 0.42780 |
| 17.5 | 0.0004094 | 173.37 | 263.92 | 0.0554 | 0.0000837 | 0.0001015 | 0.5086748 | 0.42780 |
| 20.0 | 0.0003268 | 174.45 | 268.39 | 0.0551 | 0.0000837 | 0.0001015 | 0.5118960 | 0.42780 |
| 22.5 | 0.0002446 | 175.41 | 272.36 | 0.0547 | 0.0000837 | 0.0001015 | 0.5147599 | 0.42780 |

| | | | | | | | | |
|---|---|---|---|---|---|---|---|---|
| 25.0 | 0.0001627 | 176.26 | 275.88 | 0.0545 | 0.0000837 | 0.0001015 | 0.5173024 | 0.42780 |
| 27.5 | 0.0000812 | 177.01 | 278.98 | 0.0542 | 0.0000837 | 0.0001015 | 0.5195395 | 0.42780 |
| 30.0 | 0.0000000 | 177.67 | 281.68 | 0.0540 | 0.0000837 | 0.0001015 | 0.5214865 | 0.42780 |

calculated fluid conditions at time = 0.0000 seconds pressure = 0.0 psia
channel 2
assembly 1

| distance (in.) | delta-p (psi) | enthalpy (btu/lb) | temperature (deg-f) | density (lb/cu-ft) | flow (lb/sec) | mass flux (mlb/hr-ft2) | velocity (ft/sec) | area (sq-in) |
|---|---|---|---|---|---|---|---|---|
| 0.0 | 0.0010092 | 159.52 | 206.68 | 0.0603 | 0.0001460 | 0.0001923 | 0.8858695 | 0.39360 |
| 2.5 | 0.0009088 | 163.76 | 224.22 | 0.0587 | 0.0001460 | 0.0001923 | 0.9099057 | 0.39360 |
| 5.0 | 0.0008209 | 167.63 | 240.19 | 0.0573 | 0.0001460 | 0.0001923 | 0.9317498 | 0.39360 |
| 7.5 | 0.0007346 | 171.12 | 254.64 | 0.0561 | 0.0001460 | 0.0001923 | 0.9515059 | 0.39360 |
| 10.0 | 0.0006495 | 174.26 | 267.61 | 0.0551 | 0.0001460 | 0.0001923 | 0.9692493 | 0.39360 |
| 12.5 | 0.0005657 | 177.07 | 279.21 | 0.0542 | 0.0001460 | 0.0001923 | 0.9851014 | 0.39360 |
| 15.0 | 0.0004828 | 179.56 | 289.52 | 0.0535 | 0.0001460 | 0.0001923 | 0.9992046 | 0.39360 |
| 17.5 | 0.0004008 | 181.78 | 298.67 | 0.0528 | 0.0001460 | 0.0001923 | 1.0117153 | 0.39360 |
| 20.0 | 0.0003195 | 183.74 | 306.72 | 0.0522 | 0.0001460 | 0.0001923 | 1.0227226 | 0.39360 |
| 22.5 | 0.0002389 | 185.47 | 313.82 | 0.0517 | 0.0001460 | 0.0001923 | 1.0323398 | 0.39360 |
| 25.0 | 0.0001588 | 187.00 | 320.09 | 0.0513 | 0.0001460 | 0.0001923 | 1.0407450 | 0.39360 |
| 27.5 | 0.0000792 | 188.35 | 325.60 | 0.0510 | 0.0001460 | 0.0001923 | 1.0481284 | 0.39360 |
| 30.0 | 0.0000000 | 189.53 | 330.44 | 0.0507 | 0.0001460 | 0.0001923 | 1.0546129 | 0.39360 |

calculated fluid conditions at time = 0.0000 seconds pressure = 0.0 psia
channel 3
assembly 1

| distance (in.) | delta-p (psi) | enthalpy (btu/lb) | temperature (deg-f) | density (lb/cu-ft) | flow (lb/sec) | mass flux (mlb/hr-ft2) | velocity (ft/sec) | area (sq-in) |
|---|---|---|---|---|---|---|---|---|
| 0.0 | 0.0010092 | 159.52 | 206.68 | 0.0603 | 0.0000839 | 0.0001016 | 0.4681614 | 0.42780 |
| 2.5 | 0.0009181 | 162.62 | 219.49 | 0.0591 | 0.0000839 | 0.0001016 | 0.4774514 | 0.42780 |
| 5.0 | 0.0008312 | 165.19 | 230.12 | 0.0582 | 0.0000839 | 0.0001016 | 0.4851312 | 0.42780 |
| 7.5 | 0.0007453 | 167.35 | 239.05 | 0.0574 | 0.0000839 | 0.0001016 | 0.4915833 | 0.42780 |
| 10.0 | 0.0006603 | 169.19 | 246.66 | 0.0568 | 0.0000839 | 0.0001016 | 0.4970799 | 0.42780 |

| | | | | | | | | |
|---|---|---|---|---|---|---|---|---|
| 12.5 | 0.0005761 | 170.78 | 253.22 | 0.0563 | 0.0000839 | 0.0001016 | 0.5018241 | 0.42780 |
| 15.0 | 0.0004924 | 172.17 | 258.95 | 0.0558 | 0.0000839 | 0.0001016 | 0.5059632 | 0.42780 |
| 17.5 | 0.0004094 | 173.39 | 263.99 | 0.0554 | 0.0000839 | 0.0001016 | 0.5096083 | 0.42780 |
| 20.0 | 0.0003268 | 174.47 | 268.46 | 0.0550 | 0.0000839 | 0.0001016 | 0.5128349 | 0.42780 |
| 22.5 | 0.0002446 | 175.43 | 272.42 | 0.0547 | 0.0000839 | 0.0001016 | 0.5157016 | 0.42780 |
| 25.0 | 0.0001627 | 176.28 | 275.94 | 0.0545 | 0.0000839 | 0.0001016 | 0.5182440 | 0.42780 |
| 27.5 | 0.0000812 | 177.03 | 279.03 | 0.0542 | 0.0000839 | 0.0001016 | 0.5204767 | 0.42780 |
| 30.0 | 0.0000000 | 177.67 | 281.71 | 0.0540 | 0.0000839 | 0.0001016 | 0.5224146 | 0.42780 |

calculated fluid conditions at time = 0.0000 seconds pressure = 0.0 psia
channel 4
assembly 1

| distance (in.) | delta-p (psi) | enthalpy (btu/lb) | temperature (deg-f) | density (lb/cu-ft) | flow (lb/sec) | mass flux (mlb/hr-ft2) | velocity (ft/sec) | area (sq-in) |
|---|---|---|---|---|---|---|---|---|
| 0.0 | 0.0010092 | 159.52 | 206.68 | 0.0603 | 0.0001461 | 0.0001925 | 0.8866215 | 0.39360 |
| 2.5 | 0.0009088 | 163.76 | 224.22 | 0.0587 | 0.0001461 | 0.0001925 | 0.9106854 | 0.39360 |
| 5.0 | 0.0008209 | 167.63 | 240.20 | 0.0573 | 0.0001461 | 0.0001925 | 0.9325588 | 0.39360 |
| 7.5 | 0.0007345 | 171.13 | 254.66 | 0.0561 | 0.0001461 | 0.0001925 | 0.9523464 | 0.39360 |
| 10.0 | 0.0006495 | 174.27 | 267.65 | 0.0551 | 0.0001461 | 0.0001925 | 0.9701226 | 0.39360 |
| 12.5 | 0.0005657 | 177.08 | 279.26 | 0.0542 | 0.0001461 | 0.0001925 | 0.9860077 | 0.39360 |
| 15.0 | 0.0004828 | 179.58 | 289.58 | 0.0535 | 0.0001461 | 0.0001925 | 1.0001434 | 0.39360 |
| 17.5 | 0.0004008 | 181.80 | 298.75 | 0.0528 | 0.0001461 | 0.0001925 | 1.0126854 | 0.39360 |
| 20.0 | 0.0003195 | 183.76 | 306.81 | 0.0522 | 0.0001461 | 0.0001925 | 1.0237212 | 0.39360 |
| 22.5 | 0.0002389 | 185.50 | 313.93 | 0.0517 | 0.0001461 | 0.0001925 | 1.0333629 | 0.39360 |
| 25.0 | 0.0001588 | 187.03 | 320.22 | 0.0513 | 0.0001461 | 0.0001925 | 1.0417928 | 0.39360 |
| 27.5 | 0.0000792 | 188.38 | 325.73 | 0.0510 | 0.0001461 | 0.0001925 | 1.0491988 | 0.39360 |
| 30.0 | 0.0000000 | 189.56 | 330.58 | 0.0506 | 0.0001461 | 0.0001925 | 1.0557034 | 0.39360 |

calculated fluid conditions at time = 0.0000 seconds pressure = 0.0 psia
channel 5
assembly 1

| distance (in.) | delta-p (psi) | enthalpy (btu/lb) | temperature (deg-f) | density (lb/cu-ft) | flow (lb/sec) | mass flux (mlb/hr-ft2) | velocity (ft/sec) | area (sq-in) |
|---|---|---|---|---|---|---|---|---|

| | | | | | | | | |
|---|---|---|---|---|---|---|---|---|
| 0.0 | 0.0010092 | 159.52 | 206.68 | 0.0603 | 0.0001057 | 0.0001835 | 0.8451302 | 0.29870 |
| 2.5 | 0.0009072 | 170.21 | 250.87 | 0.0564 | 0.0001057 | 0.0001835 | 0.9028372 | 0.29870 |
| 5.0 | 0.0008184 | 178.99 | 287.13 | 0.0536 | 0.0001057 | 0.0001835 | 0.9501370 | 0.29870 |
| 7.5 | 0.0007319 | 186.18 | 316.74 | 0.0515 | 0.0001057 | 0.0001835 | 0.9885958 | 0.29870 |
| 10.0 | 0.0006472 | 192.10 | 340.98 | 0.0500 | 0.0001057 | 0.0001835 | 1.0195958 | 0.29870 |
| 12.5 | 0.0005639 | 196.96 | 360.91 | 0.0488 | 0.0001057 | 0.0001835 | 1.0450983 | 0.29870 |
| 15.0 | 0.0004816 | 200.98 | 377.36 | 0.0478 | 0.0001057 | 0.0001835 | 1.0661319 | 0.29870 |
| 17.5 | 0.0004000 | 204.30 | 390.97 | 0.0470 | 0.0001057 | 0.0001835 | 1.0835402 | 0.29870 |
| 20.0 | 0.0003192 | 207.06 | 402.26 | 0.0464 | 0.0001057 | 0.0001835 | 1.0979809 | 0.29870 |
| 22.5 | 0.0002388 | 209.36 | 411.63 | 0.0459 | 0.0001057 | 0.0001835 | 1.1099889 | 0.29870 |
| 25.0 | 0.0001588 | 211.30 | 419.50 | 0.0455 | 0.0001057 | 0.0001835 | 1.1201309 | 0.29870 |
| 27.5 | 0.0000792 | 212.93 | 426.12 | 0.0452 | 0.0001057 | 0.0001835 | 1.1286657 | 0.29870 |
| 30.0 | 0.0000000 | 214.30 | 431.70 | 0.0449 | 0.0001057 | 0.0001835 | 1.1358612 | 0.29870 |

calculated fluid conditions at time = 0.0000 seconds pressure = 0.0 psia
channel 6
assembly 1

| distance (in.) | delta-p (psi) | enthalpy (btu/lb) | temperature (deg-f) | density (lb/cu-ft) | flow (lb/sec) | mass flux (mlb/hr-ft2) | velocity (ft/sec) | area (sq-in) |
|---|---|---|---|---|---|---|---|---|
| 0.0 | 0.0010092 | 159.52 | 206.68 | 0.0603 | 0.0001460 | 0.0001923 | 0.8860659 | 0.39360 |
| 2.5 | 0.0009088 | 163.76 | 224.22 | 0.0587 | 0.0001460 | 0.0001923 | 0.9101118 | 0.39360 |
| 5.0 | 0.0008209 | 167.63 | 240.20 | 0.0573 | 0.0001460 | 0.0001923 | 0.9319649 | 0.39360 |
| 7.5 | 0.0007345 | 171.12 | 254.65 | 0.0561 | 0.0001460 | 0.0001923 | 0.9517295 | 0.39360 |
| 10.0 | 0.0006495 | 174.27 | 267.63 | 0.0551 | 0.0001460 | 0.0001923 | 0.9694812 | 0.39360 |
| 12.5 | 0.0005657 | 177.07 | 279.22 | 0.0542 | 0.0001460 | 0.0001923 | 0.9853411 | 0.39360 |
| 15.0 | 0.0004828 | 179.57 | 289.54 | 0.0535 | 0.0001460 | 0.0001923 | 0.9994516 | 0.39360 |
| 17.5 | 0.0004008 | 181.78 | 298.69 | 0.0528 | 0.0001460 | 0.0001923 | 1.0119691 | 0.39360 |
| 20.0 | 0.0003195 | 183.74 | 306.74 | 0.0522 | 0.0001460 | 0.0001923 | 1.0229822 | 0.39360 |
| 22.5 | 0.0002389 | 185.48 | 313.85 | 0.0517 | 0.0001460 | 0.0001923 | 1.0326037 | 0.39360 |
| 25.0 | 0.0001588 | 187.01 | 320.12 | 0.0513 | 0.0001460 | 0.0001923 | 1.0410130 | 0.39360 |
| 27.5 | 0.0000792 | 188.35 | 325.63 | 0.0510 | 0.0001460 | 0.0001923 | 1.0483989 | 0.39360 |
| 30.0 | 0.0000000 | 189.53 | 330.46 | 0.0506 | 0.0001460 | 0.0001923 | 1.0548847 | 0.39360 |

calculated fluid conditions at time = 0.0000 seconds pressure = 0.0 psia

channel 7
assembly 1

| distance (in.) | delta-p (psi) | enthalpy (btu/lb) | temperature (deg-f) | density (lb/cu-ft) | flow (lb/sec) | mass flux (mlb/hr-ft2) | velocity (ft/sec) | area (sq-in) |
|---|---|---|---|---|---|---|---|---|
| 0.0 | 0.0010092 | 159.52 | 206.68 | 0.0603 | 0.0000843 | 0.0001022 | 0.4708485 | 0.42780 |
| 2.5 | 0.0009180 | 162.62 | 219.51 | 0.0591 | 0.0000843 | 0.0001022 | 0.4801997 | 0.42780 |
| 5.0 | 0.0008311 | 165.20 | 230.16 | 0.0582 | 0.0000843 | 0.0001022 | 0.4879413 | 0.42780 |
| 7.5 | 0.0007452 | 167.37 | 239.12 | 0.0574 | 0.0000843 | 0.0001022 | 0.4944553 | 0.42780 |
| 10.0 | 0.0006602 | 169.22 | 246.76 | 0.0568 | 0.0000843 | 0.0001022 | 0.5000114 | 0.42780 |
| 12.5 | 0.0005760 | 170.81 | 253.37 | 0.0562 | 0.0000843 | 0.0001022 | 0.5048114 | 0.42780 |
| 15.0 | 0.0004924 | 172.21 | 259.13 | 0.0558 | 0.0000843 | 0.0001022 | 0.5090015 | 0.42780 |
| 17.5 | 0.0004093 | 173.44 | 264.21 | 0.0554 | 0.0000843 | 0.0001022 | 0.5126929 | 0.42780 |
| 20.0 | 0.0003267 | 174.53 | 268.71 | 0.0550 | 0.0000843 | 0.0001022 | 0.5159608 | 0.42780 |
| 22.5 | 0.0002445 | 175.49 | 272.70 | 0.0547 | 0.0000843 | 0.0001022 | 0.5188644 | 0.42780 |
| 25.0 | 0.0001627 | 176.35 | 276.24 | 0.0544 | 0.0000843 | 0.0001022 | 0.5214394 | 0.42780 |
| 27.5 | 0.0000812 | 177.10 | 279.36 | 0.0542 | 0.0000843 | 0.0001022 | 0.5237007 | 0.42780 |
| 30.0 | 0.0000000 | 177.76 | 282.06 | 0.0540 | 0.0000843 | 0.0001022 | 0.5256633 | 0.42780 |

calculated fluid conditions at time = 0.0000 seconds pressure = 0.0 psia
channel 8
assembly 1

| distance (in.) | delta-p (psi) | enthalpy (btu/lb) | temperature (deg-f) | density (lb/cu-ft) | flow (lb/sec) | mass flux (mlb/hr-ft2) | velocity (ft/sec) | area (sq-in) |
|---|---|---|---|---|---|---|---|---|
| 0.0 | 0.0010092 | 159.52 | 206.68 | 0.0603 | 0.0001462 | 0.0001925 | 0.8868267 | 0.39360 |
| 2.5 | 0.0009088 | 163.76 | 224.23 | 0.0587 | 0.0001462 | 0.0001925 | 0.9109005 | 0.39360 |
| 5.0 | 0.0008209 | 167.63 | 240.21 | 0.0573 | 0.0001462 | 0.0001925 | 0.9327831 | 0.39360 |
| 7.5 | 0.0007345 | 171.13 | 254.67 | 0.0561 | 0.0001462 | 0.0001925 | 0.9525798 | 0.39360 |
| 10.0 | 0.0006495 | 174.27 | 267.66 | 0.0551 | 0.0001462 | 0.0001925 | 0.9703645 | 0.39360 |
| 12.5 | 0.0005656 | 177.08 | 279.27 | 0.0542 | 0.0001462 | 0.0001925 | 0.9862579 | 0.39360 |
| 15.0 | 0.0004828 | 179.58 | 289.60 | 0.0535 | 0.0001462 | 0.0001925 | 1.0004014 | 0.39360 |
| 17.5 | 0.0004008 | 181.80 | 298.77 | 0.0528 | 0.0001462 | 0.0001925 | 1.0129586 | 0.39360 |
| 20.0 | 0.0003195 | 183.77 | 306.84 | 0.0522 | 0.0001462 | 0.0001925 | 1.0239926 | 0.39360 |
| 22.5 | 0.0002389 | 185.51 | 313.96 | 0.0517 | 0.0001462 | 0.0001925 | 1.0336398 | 0.39360 |
| 25.0 | 0.0001588 | 187.04 | 320.24 | 0.0513 | 0.0001462 | 0.0001925 | 1.0420734 | 0.39360 |
| 27.5 | 0.0000792 | 188.39 | 325.76 | 0.0510 | 0.0001462 | 0.0001925 | 1.0494823 | 0.39360 |

| | | | | | | | | |
|---|---|---|---|---|---|---|---|---|
| 30.0 | 0.0000000 | 189.57 | 330.61 | 0.0506 | 0.0001462 | 0.0001925 | 1.0559885 | 0.39360 |

calculated fluid conditions at time = 0.0000 seconds pressure = 0.0 psia
channel 9
assembly 1

| distance (in.) | delta-p (psi) | enthalpy (btu/lb) | temperature (deg-f) | density (lb/cu-ft) | flow (lb/sec) | mass flux (mlb/hr-ft2) | velocity (ft/sec) | area (sq-in) |
|---|---|---|---|---|---|---|---|---|
| 0.0 | 0.0010092 | 159.52 | 206.68 | 0.0603 | 0.0000839 | 0.0001016 | 0.4681038 | 0.42780 |
| 2.5 | 0.0009181 | 162.61 | 219.48 | 0.0591 | 0.0000839 | 0.0001016 | 0.4773833 | 0.42780 |
| 5.0 | 0.0008312 | 165.18 | 230.10 | 0.0582 | 0.0000839 | 0.0001016 | 0.4850578 | 0.42780 |
| 7.5 | 0.0007453 | 167.35 | 239.03 | 0.0574 | 0.0000839 | 0.0001016 | 0.4915082 | 0.42780 |
| 10.0 | 0.0006603 | 169.19 | 246.64 | 0.0568 | 0.0000839 | 0.0001016 | 0.4970054 | 0.42780 |
| 12.5 | 0.0005761 | 170.78 | 253.21 | 0.0563 | 0.0000839 | 0.0001016 | 0.5017516 | 0.42780 |
| 15.0 | 0.0004924 | 172.16 | 258.94 | 0.0558 | 0.0000839 | 0.0001016 | 0.5058934 | 0.42780 |
| 17.5 | 0.0004094 | 173.38 | 263.99 | 0.0554 | 0.0000839 | 0.0001016 | 0.5095417 | 0.42780 |
| 20.0 | 0.0003268 | 174.47 | 268.46 | 0.0550 | 0.0000839 | 0.0001016 | 0.5127720 | 0.42780 |
| 22.5 | 0.0002446 | 175.43 | 272.43 | 0.0547 | 0.0000839 | 0.0001016 | 0.5156429 | 0.42780 |
| 25.0 | 0.0001627 | 176.28 | 275.96 | 0.0545 | 0.0000839 | 0.0001016 | 0.5181908 | 0.42780 |
| 27.5 | 0.0000812 | 177.03 | 279.06 | 0.0542 | 0.0000839 | 0.0001016 | 0.5204308 | 0.42780 |
| 30.0 | 0.0000000 | 177.68 | 281.75 | 0.0540 | 0.0000839 | 0.0001016 | 0.5223786 | 0.42780 |

calculated fluid conditions at time = 0.0000 seconds pressure = 0.0 psia
channel 1
assembly 2

| distance (in.) | delta-p (psi) | enthalpy (btu/lb) | temperature (deg-f) | density (lb/cu-ft) | flow (lb/sec) | mass flux (mlb/hr-ft2) | velocity (ft/sec) | area (sq-in) |
|---|---|---|---|---|---|---|---|---|
| 0.0 | 0.0010092 | 159.52 | 206.68 | 0.0603 | 0.0000843 | 0.0001022 | 0.4708423 | 0.42780 |
| 2.5 | 0.0009180 | 162.62 | 219.51 | 0.0591 | 0.0000843 | 0.0001022 | 0.4801933 | 0.42780 |
| 5.0 | 0.0008311 | 165.20 | 230.16 | 0.0582 | 0.0000843 | 0.0001022 | 0.4879348 | 0.42780 |
| 7.5 | 0.0007452 | 167.37 | 239.12 | 0.0574 | 0.0000843 | 0.0001022 | 0.4944487 | 0.42780 |
| 10.0 | 0.0006602 | 169.22 | 246.76 | 0.0568 | 0.0000843 | 0.0001022 | 0.5000046 | 0.42780 |
| 12.5 | 0.0005760 | 170.81 | 253.37 | 0.0562 | 0.0000843 | 0.0001022 | 0.5048045 | 0.42780 |
| 15.0 | 0.0004924 | 172.21 | 259.13 | 0.0558 | 0.0000843 | 0.0001022 | 0.5089945 | 0.42780 |

| | | | | | | | | |
|---|---|---|---|---|---|---|---|---|
| 17.5 | 0.0004093 | 173.44 | 264.21 | 0.0554 | 0.0000843 | 0.0001022 | 0.5126857 | 0.42780 |
| 20.0 | 0.0003267 | 174.53 | 268.71 | 0.0550 | 0.0000843 | 0.0001022 | 0.5159536 | 0.42780 |
| 22.5 | 0.0002445 | 175.49 | 272.70 | 0.0547 | 0.0000843 | 0.0001022 | 0.5188571 | 0.42780 |
| 25.0 | 0.0001627 | 176.35 | 276.24 | 0.0544 | 0.0000843 | 0.0001022 | 0.5214321 | 0.42780 |
| 27.5 | 0.0000812 | 177.10 | 279.36 | 0.0542 | 0.0000843 | 0.0001022 | 0.5236934 | 0.42780 |
| 30.0 | 0.0000000 | 177.76 | 282.06 | 0.0540 | 0.0000843 | 0.0001022 | 0.5256560 | 0.42780 |

calculated fluid conditions at time = 0.0000 seconds pressure = 0.0 psia
channel 2
assembly 2

| distance (in.) | delta-p (psi) | enthalpy (btu/lb) | temperature (deg-f) | density (lb/cu-ft) | flow (lb/sec) | mass flux (mlb/hr-ft2) | velocity (ft/sec) | area (sq-in) |
|---|---|---|---|---|---|---|---|---|
| 0.0 | 0.0010092 | 159.52 | 206.68 | 0.0603 | 0.0001462 | 0.0001925 | 0.8868252 | 0.39360 |
| 2.5 | 0.0009088 | 163.76 | 224.23 | 0.0587 | 0.0001462 | 0.0001925 | 0.9108990 | 0.39360 |
| 5.0 | 0.0008209 | 167.63 | 240.21 | 0.0573 | 0.0001462 | 0.0001925 | 0.9327816 | 0.39360 |
| 7.5 | 0.0007345 | 171.13 | 254.67 | 0.0561 | 0.0001462 | 0.0001925 | 0.9525781 | 0.39360 |
| 10.0 | 0.0006495 | 174.27 | 267.66 | 0.0551 | 0.0001462 | 0.0001925 | 0.9703629 | 0.39360 |
| 12.5 | 0.0005656 | 177.08 | 279.27 | 0.0542 | 0.0001462 | 0.0001925 | 0.9862562 | 0.39360 |
| 15.0 | 0.0004828 | 179.58 | 289.60 | 0.0535 | 0.0001462 | 0.0001925 | 1.0003996 | 0.39360 |
| 17.5 | 0.0004008 | 181.80 | 298.77 | 0.0528 | 0.0001462 | 0.0001925 | 1.0129487 | 0.39360 |
| 20.0 | 0.0003195 | 183.77 | 306.84 | 0.0522 | 0.0001462 | 0.0001925 | 1.0239997 | 0.39360 |
| 22.5 | 0.0002389 | 185.51 | 313.96 | 0.0517 | 0.0001462 | 0.0001925 | 1.0336370 | 0.39360 |
| 25.0 | 0.0001588 | 187.04 | 320.24 | 0.0513 | 0.0001462 | 0.0001925 | 1.0420714 | 0.39360 |
| 27.5 | 0.0000792 | 188.39 | 325.76 | 0.0510 | 0.0001462 | 0.0001925 | 1.0494803 | 0.39360 |
| 30.0 | 0.0000000 | 189.57 | 330.61 | 0.0506 | 0.0001462 | 0.0001925 | 1.0559864 | 0.39360 |

calculated fluid conditions at time = 0.0000 seconds pressure = 0.0 psia
channel 3
assembly 2

| distance (in.) | delta-p (psi) | enthalpy (btu/lb) | temperature (deg-f) | density (lb/cu-ft) | flow (lb/sec) | mass flux (mlb/hr-ft2) | velocity (ft/sec) | area (sq-in) |
|---|---|---|---|---|---|---|---|---|
| 0.0 | 0.0010092 | 159.52 | 206.68 | 0.0603 | 0.0000839 | 0.0001016 | 0.4688983 | 0.42780 |
| 2.5 | 0.0009181 | 162.61 | 219.48 | 0.0591 | 0.0000839 | 0.0001016 | 0.4773777 | 0.42780 |

| | | | | | | | | |
|---|---|---|---|---|---|---|---|---|
| 5.0 | 0.0008312 | 165.18 | 230.10 | 0.0582 | 0.0000839 | 0.0001016 | 0.4850521 | 0.42780 |
| 7.5 | 0.0007453 | 167.35 | 239.03 | 0.0574 | 0.0000839 | 0.0001016 | 0.4915024 | 0.42780 |
| 10.0 | 0.0006603 | 169.19 | 246.64 | 0.0568 | 0.0000839 | 0.0001016 | 0.4969995 | 0.42780 |
| 12.5 | 0.0005761 | 170.78 | 253.20 | 0.0563 | 0.0000839 | 0.0001016 | 0.5017455 | 0.42780 |
| 15.0 | 0.0004924 | 172.16 | 258.94 | 0.0558 | 0.0000839 | 0.0001016 | 0.5058872 | 0.42780 |
| 17.5 | 0.0004094 | 173.38 | 263.99 | 0.0554 | 0.0000839 | 0.0001016 | 0.5095354 | 0.42780 |
| 20.0 | 0.0003268 | 174.47 | 268.46 | 0.0550 | 0.0000839 | 0.0001016 | 0.5127657 | 0.42780 |
| 22.5 | 0.0002446 | 175.43 | 272.43 | 0.0547 | 0.0000839 | 0.0001016 | 0.5156365 | 0.42780 |
| 25.0 | 0.0001627 | 176.28 | 275.95 | 0.0545 | 0.0000839 | 0.0001016 | 0.5181844 | 0.42780 |
| 27.5 | 0.0000812 | 177.03 | 279.05 | 0.0542 | 0.0000839 | 0.0001016 | 0.5204243 | 0.42780 |
| 30.0 | 0.0000000 | 177.68 | 281.75 | 0.0540 | 0.0000839 | 0.0001016 | 0.5223721 | 0.42780 |

calculated fluid conditions at time = 0.0000 seconds pressure = 0.0 psia
channel 4
assembly 2

| distance (in.) | delta-p (psi) | enthalpy (btu/lb) | temperature (deg-f) | density (lb/cu-ft) | flow (lb/sec) | mass flux (mlb/hr-ft2) | velocity (ft/sec) | area (sq-in) |
|---|---|---|---|---|---|---|---|---|
| 0.0 | 0.0010092 | 159.52 | 206.68 | 0.0603 | 0.0001461 | 0.0001925 | 0.8866153 | 0.39360 |
| 2.5 | 0.0009088 | 163.76 | 224.22 | 0.0587 | 0.0001461 | 0.0001925 | 0.9106790 | 0.39360 |
| 5.0 | 0.0008209 | 167.63 | 240.20 | 0.0573 | 0.0001461 | 0.0001925 | 0.9325520 | 0.39360 |
| 7.5 | 0.0007345 | 171.13 | 254.66 | 0.0561 | 0.0001461 | 0.0001925 | 0.9523394 | 0.39360 |
| 10.0 | 0.0006495 | 174.27 | 267.65 | 0.0551 | 0.0001461 | 0.0001925 | 0.9701153 | 0.39360 |
| 12.5 | 0.0005657 | 177.08 | 279.26 | 0.0542 | 0.0001461 | 0.0001925 | 0.9860002 | 0.39360 |
| 15.0 | 0.0004828 | 179.58 | 289.58 | 0.0535 | 0.0001461 | 0.0001925 | 1.0001356 | 0.39360 |
| 17.5 | 0.0004008 | 181.80 | 298.75 | 0.0528 | 0.0001461 | 0.0001925 | 1.0126774 | 0.39360 |
| 20.0 | 0.0003195 | 183.76 | 306.81 | 0.0522 | 0.0001461 | 0.0001925 | 1.0237131 | 0.39360 |
| 22.5 | 0.0002389 | 185.50 | 313.93 | 0.0517 | 0.0001461 | 0.0001925 | 1.0333546 | 0.39360 |
| 25.0 | 0.0001588 | 187.03 | 320.21 | 0.0513 | 0.0001461 | 0.0001925 | 1.0417845 | 0.39360 |
| 27.5 | 0.0000792 | 188.38 | 325.73 | 0.0510 | 0.0001461 | 0.0001925 | 1.0491905 | 0.39360 |
| 30.0 | 0.0000000 | 189.56 | 330.58 | 0.0506 | 0.0001461 | 0.0001925 | 1.0556951 | 0.39360 |

calculated fluid conditions at time = 0.0000 seconds pressure = 0.0 psia
channel 5
assembly 2

| distance (in.) | delta-p (psi) | enthalpy (btu/lb) | temperature (deg-f) | density (lb/cu-ft) | flow (lb/sec) | mass flux (mlb/hr-ft2) | velocity (ft/sec) | area (sq-in) |
|---|---|---|---|---|---|---|---|---|
| 0.0 | 0.0010092 | 159.52 | 206.68 | 0.0603 | 0.0001057 | 0.0001835 | 0.8451289 | 0.29870 |
| 2.5 | 0.0009072 | 170.21 | 250.87 | 0.0584 | 0.0001057 | 0.0001835 | 0.9028358 | 0.29870 |
| 5.0 | 0.0008184 | 178.99 | 287.13 | 0.0536 | 0.0001057 | 0.0001835 | 0.9501354 | 0.29870 |
| 7.5 | 0.0007319 | 186.18 | 316.74 | 0.0515 | 0.0001057 | 0.0001835 | 0.9885938 | 0.29870 |
| 10.0 | 0.0006472 | 192.10 | 340.98 | 0.0500 | 0.0001057 | 0.0001835 | 1.0195939 | 0.29870 |
| 12.5 | 0.0005639 | 196.96 | 360.91 | 0.0488 | 0.0001057 | 0.0001835 | 1.0450963 | 0.29870 |
| 15.0 | 0.0004816 | 200.98 | 377.36 | 0.0478 | 0.0001057 | 0.0001835 | 1.0661297 | 0.29870 |
| 17.5 | 0.0004000 | 204.30 | 390.97 | 0.0470 | 0.0001057 | 0.0001835 | 1.0835379 | 0.29870 |
| 20.0 | 0.0003192 | 207.06 | 402.26 | 0.0464 | 0.0001057 | 0.0001835 | 1.0979786 | 0.29870 |
| 22.5 | 0.0002388 | 209.36 | 411.63 | 0.0459 | 0.0001057 | 0.0001835 | 1.1099864 | 0.29870 |
| 25.0 | 0.0001588 | 211.30 | 419.50 | 0.0455 | 0.0001057 | 0.0001835 | 1.1201284 | 0.29870 |
| 27.5 | 0.0000792 | 212.92 | 426.12 | 0.0452 | 0.0001057 | 0.0001835 | 1.1286632 | 0.29870 |
| 30.0 | 0.0000000 | 214.30 | 431.70 | 0.0449 | 0.0001057 | 0.0001835 | 1.1358587 | 0.29870 |

calculated fluid conditions at time = 0.0000 seconds pressure = 0.0 psia
channel 6
assembly 2

| distance (in.) | delta-p (psi) | enthalpy (btu/lb) | temperature (deg-f) | density (lb/cu-ft) | flow (lb/sec) | mass flux (mlb/hr-ft2) | velocity (ft/sec) | area (sq-in) |
|---|---|---|---|---|---|---|---|---|
| 0.0 | 0.0010092 | 159.52 | 206.68 | 0.0603 | 0.0001460 | 0.0001923 | 0.8860602 | 0.39360 |
| 2.5 | 0.0009088 | 163.76 | 224.22 | 0.0587 | 0.0001460 | 0.0001923 | 0.9101059 | 0.39360 |
| 5.0 | 0.0008209 | 167.63 | 240.20 | 0.0573 | 0.0001460 | 0.0001923 | 0.9319587 | 0.39360 |
| 7.5 | 0.0007345 | 171.12 | 254.65 | 0.0561 | 0.0001460 | 0.0001923 | 0.9517231 | 0.39360 |
| 10.0 | 0.0006495 | 174.27 | 267.63 | 0.0551 | 0.0001460 | 0.0001923 | 0.9694747 | 0.39360 |
| 12.5 | 0.0005657 | 177.07 | 279.22 | 0.0542 | 0.0001460 | 0.0001923 | 0.9853342 | 0.39360 |
| 15.0 | 0.0004828 | 179.57 | 289.54 | 0.0535 | 0.0001460 | 0.0001923 | 0.9994446 | 0.39360 |
| 17.5 | 0.0004008 | 181.78 | 298.69 | 0.0528 | 0.0001460 | 0.0001923 | 1.0119617 | 0.39360 |
| 20.0 | 0.0003195 | 183.74 | 306.74 | 0.0522 | 0.0001460 | 0.0001923 | 1.0229748 | 0.39360 |
| 22.5 | 0.0002389 | 185.48 | 313.85 | 0.0517 | 0.0001460 | 0.0001923 | 1.0325960 | 0.39360 |
| 25.0 | 0.0001588 | 187.01 | 320.12 | 0.0513 | 0.0001460 | 0.0001923 | 1.0410053 | 0.39360 |
| 27.5 | 0.0000792 | 188.35 | 325.63 | 0.0510 | 0.0001460 | 0.0001923 | 1.0483912 | 0.39360 |
| 30.0 | 0.0000000 | 189.53 | 330.46 | 0.0506 | 0.0001460 | 0.0001923 | 1.0548771 | 0.39360 |

calculated fluid conditions at time = 0.0000 seconds pressure = 0.0 psia
channel 7
assembly 2

| distance (in.) | delta-p (psi) | enthalpy (btu/lb) | temperature (deg-f) | density (lb/cu-ft) | flow (lb/sec) | mass flux (mlb/hr-ft2) | velocity (ft/sec) | area (sq-in) |
|---|---|---|---|---|---|---|---|---|
| 0.0 | 0.0010092 | 159.52 | 206.68 | 0.0603 | 0.0000837 | 0.0001014 | 0.4673260 | 0.42780 |
| 2.5 | 0.0009181 | 162.61 | 219.47 | 0.0591 | 0.0000837 | 0.0001014 | 0.4765823 | 0.42780 |
| 5.0 | 0.0008312 | 165.18 | 230.08 | 0.0582 | 0.0000837 | 0.0001014 | 0.4842365 | 0.42780 |
| 7.5 | 0.0007453 | 167.34 | 239.00 | 0.0574 | 0.0000837 | 0.0001014 | 0.4906689 | 0.42780 |
| 10.0 | 0.0006603 | 169.18 | 246.60 | 0.0568 | 0.0000837 | 0.0001014 | 0.4961501 | 0.42780 |
| 12.5 | 0.0005761 | 170.76 | 253.16 | 0.0563 | 0.0000837 | 0.0001014 | 0.5008820 | 0.42780 |
| 15.0 | 0.0004925 | 172.15 | 258.88 | 0.0558 | 0.0000837 | 0.0001014 | 0.5050113 | 0.42780 |
| 17.5 | 0.0004094 | 173.37 | 263.92 | 0.0554 | 0.0000837 | 0.0001014 | 0.5086488 | 0.42780 |
| 20.0 | 0.0003268 | 174.45 | 268.39 | 0.0551 | 0.0000837 | 0.0001014 | 0.5118699 | 0.42780 |
| 22.5 | 0.0002446 | 175.41 | 272.36 | 0.0547 | 0.0000837 | 0.0001014 | 0.5147335 | 0.42780 |
| 25.0 | 0.0001627 | 176.26 | 275.88 | 0.0545 | 0.0000837 | 0.0001014 | 0.5172761 | 0.42780 |
| 27.5 | 0.0000812 | 177.01 | 278.98 | 0.0542 | 0.0000837 | 0.0001014 | 0.5195132 | 0.42780 |
| 30.0 | 0.0000000 | 177.67 | 281.68 | 0.0540 | 0.0000837 | 0.0001014 | 0.5214605 | 0.42780 |

calculated fluid conditions at time = 0.0000 seconds pressure = 0.0 psia
channel 8
assembly 2

| distance (in.) | delta-p (psi) | enthalpy (btu/lb) | temperature (deg-f) | density (lb/cu-ft) | flow (lb/sec) | mass flux (mlb/hr-ft2) | velocity (ft/sec) | area (sq-in) |
|---|---|---|---|---|---|---|---|---|
| 0.0 | 0.0010092 | 159.52 | 206.68 | 0.0603 | 0.0001460 | 0.0001923 | 0.8858591 | 0.39360 |
| 2.5 | 0.0009088 | 163.76 | 224.22 | 0.0587 | 0.0001460 | 0.0001923 | 0.9098949 | 0.39360 |
| 5.0 | 0.0008209 | 167.63 | 240.19 | 0.0573 | 0.0001460 | 0.0001923 | 0.9317386 | 0.39360 |
| 7.5 | 0.0007346 | 171.12 | 254.64 | 0.0561 | 0.0001460 | 0.0001923 | 0.9514941 | 0.39360 |
| 10.0 | 0.0006495 | 174.26 | 267.61 | 0.0551 | 0.0001460 | 0.0001923 | 0.9692372 | 0.39360 |
| 12.5 | 0.0005657 | 177.07 | 279.20 | 0.0542 | 0.0001460 | 0.0001923 | 0.9850887 | 0.39360 |
| 15.0 | 0.0004828 | 179.56 | 289.52 | 0.0535 | 0.0001460 | 0.0001923 | 0.9991916 | 0.39360 |
| 17.5 | 0.0004008 | 181.78 | 298.67 | 0.0528 | 0.0001460 | 0.0001923 | 1.0117019 | 0.39360 |
| 20.0 | 0.0003195 | 183.74 | 306.72 | 0.0522 | 0.0001460 | 0.0001923 | 1.0227090 | 0.39360 |

| | | | | | | | | |
|---|---|---|---|---|---|---|---|---|
| 22.5 | 0.0002389 | 185.47 | 313.82 | 0.0517 | 0.0001460 | 0.0001923 | 1.0323269 | 0.39360 |
| 25.0 | 0.0001588 | 187.00 | 320.09 | 0.0513 | 0.0001460 | 0.0001923 | 1.0407312 | 0.39360 |
| 27.5 | 0.0000792 | 188.35 | 325.60 | 0.0510 | 0.0001460 | 0.0001923 | 1.0481145 | 0.39360 |
| 30.0 | 0.0000000 | 189.53 | 330.44 | 0.0507 | 0.0001460 | 0.0001923 | 1.0545992 | 0.39360 |

calculated fluid conditions at time = 0.0000 seconds pressure = 0.0 psia
channel 9
assembly 2

| distance (in.) | delta-p (psi) | enthalpy (btu/lb) | temperature (deg-f) | density (lb/cu-ft) | flow (lb/sec) | mass flux (mlb/hr-ft2) | velocity (ft/sec) | area (sq-in) |
|---|---|---|---|---|---|---|---|---|
| 0.0 | 0.0010092 | 159.52 | 206.68 | 0.0603 | 0.0000839 | 0.0001016 | 0.4681396 | 0.42780 |
| 2.5 | 0.0009181 | 162.62 | 219.49 | 0.0591 | 0.0000839 | 0.0001016 | 0.4774291 | 0.42780 |
| 5.0 | 0.0008312 | 165.19 | 230.12 | 0.0582 | 0.0000839 | 0.0001016 | 0.4851083 | 0.42780 |
| 7.5 | 0.0007453 | 167.35 | 239.05 | 0.0574 | 0.0000839 | 0.0001016 | 0.4915599 | 0.42780 |
| 10.0 | 0.0006603 | 169.19 | 246.65 | 0.0568 | 0.0000839 | 0.0001016 | 0.4970562 | 0.42780 |
| 12.5 | 0.0005761 | 170.78 | 253.22 | 0.0563 | 0.0000839 | 0.0001016 | 0.5017998 | 0.42780 |
| 15.0 | 0.0004924 | 172.16 | 258.95 | 0.0558 | 0.0000839 | 0.0001016 | 0.5059387 | 0.42780 |
| 17.5 | 0.0004094 | 173.39 | 263.99 | 0.0554 | 0.0000839 | 0.0001016 | 0.5095833 | 0.42780 |
| 20.0 | 0.0003268 | 174.47 | 268.45 | 0.0550 | 0.0000839 | 0.0001016 | 0.5128100 | 0.42780 |
| 22.5 | 0.0002446 | 175.43 | 272.42 | 0.0547 | 0.0000839 | 0.0001016 | 0.5156763 | 0.42780 |
| 25.0 | 0.0001627 | 176.28 | 275.94 | 0.0545 | 0.0000839 | 0.0001016 | 0.5182189 | 0.42780 |
| 27.5 | 0.0000812 | 177.02 | 279.03 | 0.0542 | 0.0000839 | 0.0001016 | 0.5204513 | 0.42780 |
| 30.0 | 0.0000000 | 177.67 | 281.71 | 0.0540 | 0.0000839 | 0.0001016 | 0.5223895 | 0.42780 |

calculated fluid conditions at time = 0.0000 seconds pressure = 0.0 psia
channel 1
assembly 3

| distance (in.) | delta-p (psi) | enthalpy (btu/lb) | temperature (deg-f) | density (lb/cu-ft) | flow (lb/sec) | mass flux (mlb/hr-ft2) | velocity (ft/sec) | area (sq-in) |
|---|---|---|---|---|---|---|---|---|
| 0.0 | 0.0010092 | 159.52 | 206.68 | 0.0603 | -0.0005129 | -0.0001275 | -0.5871531 | 2.08600 |
| 2.5 | 0.0009231 | 159.51 | 206.65 | 0.0603 | -0.0005129 | -0.0001275 | -0.5885753 | 2.08600 |
| 5.0 | 0.0008372 | 159.89 | 208.20 | 0.0602 | -0.0005129 | -0.0001275 | -0.5901787 | 2.08600 |
| 7.5 | 0.0007515 | 160.31 | 209.95 | 0.0600 | -0.0005129 | -0.0001275 | -0.5919297 | 2.08600 |

| | | | | | | | | |
|---|---|---|---|---|---|---|---|---|
| 10.0 | 0.0006661 | 160.78 | 211.88 | 0.0598 | -0.0005129 | -0.0001275 | -0.5938403 | 2.08600 |
| 12.5 | 0.0005810 | 161.29 | 213.99 | 0.0596 | -0.0005129 | -0.0001275 | -0.5959108 | 2.08600 |
| 15.0 | 0.0004962 | 161.84 | 216.28 | 0.0594 | -0.0005129 | -0.0001275 | -0.5981486 | 2.08600 |
| 17.5 | 0.0004118 | 162.44 | 218.75 | 0.0592 | -0.0005129 | -0.0001275 | -0.6005653 | 2.08600 |
| 20.0 | 0.0003276 | 163.08 | 221.41 | 0.0590 | -0.0005129 | -0.0001275 | -0.6031805 | 2.08600 |
| 22.5 | 0.0002439 | 163.78 | 224.30 | 0.0587 | -0.0005129 | -0.0001275 | -0.6060188 | 2.08600 |
| 25.0 | 0.0001606 | 164.54 | 227.43 | 0.0584 | -0.0005129 | -0.0001275 | -0.6091137 | 2.08600 |
| 27.5 | 0.0000777 | 165.36 | 230.84 | 0.0581 | -0.0005129 | -0.0001275 | -0.6125069 | 2.08600 |
| 30.0 | 0.0000000 | 166.27 | 234.59 | 0.0578 | -0.0005129 | -0.0001275 | -0.5871521 | 2.08600 |

calculated fluid conditions at time = 0.0000 seconds pressure = 0.0 psia
channel 1
assembly 4

| distance (in.) | delta-p (psi) | enthalpy (btu/lb) | temperature (deg-f) | density (lb/cu-ft) | flow (lb/sec) | mass flux (mlb/hr-ft2) | velocity (ft/sec) | area (sq-in) |
|---|---|---|---|---|---|---|---|---|
| 0.0 | 0.0010092 | 159.52 | 206.68 | 0.0603 | -0.0005129 | -0.0001275 | -0.5871820 | 2.08600 |
| 2.5 | 0.0009231 | 159.51 | 206.65 | 0.0603 | -0.0005129 | -0.0001275 | -0.5886043 | 2.08600 |
| 5.0 | 0.0008372 | 159.89 | 208.20 | 0.0602 | -0.0005129 | -0.0001275 | -0.5902079 | 2.08600 |
| 7.5 | 0.0007515 | 160.31 | 209.95 | 0.0600 | -0.0005129 | -0.0001275 | -0.5919592 | 2.08600 |
| 10.0 | 0.0006661 | 160.78 | 211.88 | 0.0598 | -0.0005129 | -0.0001275 | -0.5938700 | 2.08600 |
| 12.5 | 0.0005810 | 161.29 | 213.99 | 0.0596 | -0.0005129 | -0.0001275 | -0.5959408 | 2.08600 |
| 15.0 | 0.0004962 | 161.84 | 216.28 | 0.0594 | -0.0005129 | -0.0001275 | -0.5981789 | 2.08600 |
| 17.5 | 0.0004118 | 162.44 | 218.75 | 0.0592 | -0.0005129 | -0.0001275 | -0.6005960 | 2.08600 |
| 20.0 | 0.0003276 | 163.08 | 221.41 | 0.0590 | -0.0005129 | -0.0001275 | -0.6032116 | 2.08600 |
| 22.5 | 0.0002439 | 163.78 | 224.30 | 0.0587 | -0.0005129 | -0.0001275 | -0.6060505 | 2.08600 |
| 25.0 | 0.0001606 | 164.54 | 227.43 | 0.0584 | -0.0005129 | -0.0001275 | -0.6091459 | 2.08600 |
| 27.5 | 0.0000777 | 165.36 | 230.84 | 0.0581 | -0.0005129 | -0.0001275 | -0.6125395 | 2.08600 |
| 30.0 | 0.0000000 | 166.27 | 234.59 | 0.0578 | -0.0005129 | -0.0001275 | -0.5871823 | 2.08600 |

calculated fluid conditions at time = 0.0000 seconds pressure = 0.0 psia
channel 1
assembly 5

| distance | delta-p | enthalpy | temperature | density | flow | mass flux | velocity | area |
|---|---|---|---|---|---|---|---|---|

| (in.) | (psi) | (btu/lb) | (deg-f) | (lb/cu-ft) | (lb/sec) | (mlb/hr-ft2) | (ft/sec) | (sq-in) |
|---|---|---|---|---|---|---|---|---|
| 0.0 | 0.0010092 | 159.52 | 206.68 | 0.0603 | -0.0005129 | -0.0001275 | -0.5871882 | 2.08600 |
| 2.5 | 0.0009231 | 159.51 | 206.65 | 0.0603 | -0.0005129 | -0.0001275 | -0.5886186 | 2.08600 |
| 5.0 | 0.0008372 | 159.89 | 208.20 | 0.0602 | -0.0005129 | -0.0001275 | -0.5902143 | 2.08600 |
| 7.5 | 0.0007515 | 160.31 | 209.95 | 0.0600 | -0.0005129 | -0.0001275 | -0.5919656 | 2.08600 |
| 10.0 | 0.0006661 | 160.78 | 211.88 | 0.0598 | -0.0005129 | -0.0001275 | -0.5938766 | 2.08600 |
| 12.5 | 0.0005810 | 161.29 | 213.99 | 0.0596 | -0.0005129 | -0.0001275 | -0.5959475 | 2.08600 |
| 15.0 | 0.0004962 | 161.84 | 216.28 | 0.0594 | -0.0005129 | -0.0001275 | -0.5981857 | 2.08600 |
| 17.5 | 0.0004118 | 162.44 | 218.75 | 0.0592 | -0.0005129 | -0.0001275 | -0.6006030 | 2.08600 |
| 20.0 | 0.0003276 | 163.08 | 221.41 | 0.0590 | -0.0005129 | -0.0001275 | -0.6032187 | 2.08600 |
| 22.5 | 0.0002439 | 163.78 | 224.30 | 0.0587 | -0.0005129 | -0.0001275 | -0.6060577 | 2.08600 |
| 25.0 | 0.0001606 | 164.54 | 227.43 | 0.0584 | -0.0005129 | -0.0001275 | -0.6091531 | 2.08600 |
| 27.5 | 0.0000777 | 165.36 | 230.84 | 0.0581 | -0.0005129 | -0.0001275 | -0.6125466 | 2.08600 |
| 30.0 | 0.0000000 | 166.27 | 234.59 | 0.0578 | -0.0005129 | -0.0001275 | -0.5871889 | 2.08600 |

calculated fluid conditions at time = 0.0000 seconds pressure = 0.0 psia
channel 1
assembly 6

| distance (in.) | delta-p (psi) | enthalpy (btu/lb) | temperature (deg-f) | density (lb/cu-ft) | flow (lb/sec) | mass flux (mlb/hr-ft2) | velocity (ft/sec) | area (sq-in) |
|---|---|---|---|---|---|---|---|---|
| 0.0 | 0.0010092 | 159.52 | 206.68 | 0.0603 | -0.0005129 | -0.0001275 | -0.5871668 | 2.08600 |
| 2.5 | 0.0009231 | 159.51 | 206.65 | 0.0603 | -0.0005129 | -0.0001275 | -0.5885891 | 2.08600 |
| 5.0 | 0.0008372 | 159.89 | 208.20 | 0.0602 | -0.0005129 | -0.0001275 | -0.5901927 | 2.08600 |
| 7.5 | 0.0007515 | 160.31 | 209.95 | 0.0600 | -0.0005129 | -0.0001275 | -0.5919440 | 2.08600 |
| 10.0 | 0.0006661 | 160.78 | 211.88 | 0.0598 | -0.0005129 | -0.0001275 | -0.5938549 | 2.08600 |
| 12.5 | 0.0005810 | 161.29 | 213.99 | 0.0596 | -0.0005129 | -0.0001275 | -0.5959258 | 2.08600 |
| 15.0 | 0.0004962 | 161.84 | 216.28 | 0.0594 | -0.0005129 | -0.0001275 | -0.5981639 | 2.08600 |
| 17.5 | 0.0004118 | 162.44 | 218.75 | 0.0592 | -0.0005129 | -0.0001275 | -0.6005810 | 2.08600 |
| 20.0 | 0.0003276 | 163.08 | 221.41 | 0.0590 | -0.0005129 | -0.0001275 | -0.6031966 | 2.08600 |
| 22.5 | 0.0002439 | 163.78 | 224.30 | 0.0587 | -0.0005129 | -0.0001275 | -0.6060353 | 2.08600 |
| 25.0 | 0.0001606 | 164.54 | 227.43 | 0.0584 | -0.0005129 | -0.0001275 | -0.6091303 | 2.08600 |
| 27.5 | 0.0000777 | 165.36 | 230.84 | 0.0581 | -0.0005129 | -0.0001275 | -0.6125232 | 2.08600 |
| 30.0 | 0.0000000 | 166.27 | 234.59 | 0.0578 | -0.0005129 | -0.0001275 | -0.5871668 | 2.08600 |

slab temperature summary time = 0.0000 seconds
(assembly no. - channel no.)

| axial zone (inches) | ( 1) | ( 2) | ( 3) | ( 4) | ( 5) | ( 6) | ( 7) | ( 8) | ( 9) | ( 10) |
|---|---|---|---|---|---|---|---|---|---|---|
| 0.0 - 2.5 | 200.67 | 202.06 | 202.41 | 202.68 | 202.72 | 202.60 | 202.73 | 202.99 | 202.53 | 203.02 |
| 2.5 - 5.0 | 201.10 | 202.51 | 202.86 | 203.13 | 203.17 | 203.08 | 203.18 | 203.49 | 202.99 | 203.52 |
| 5.0 - 7.5 | 201.85 | 203.30 | 203.66 | 203.93 | 203.97 | 203.90 | 203.98 | 204.33 | 203.79 | 204.36 |
| 7.5 - 10.0 | 202.84 | 204.33 | 204.70 | 204.97 | 205.01 | 204.97 | 205.03 | 205.42 | 204.83 | 205.45 |
| 10.0 - 12.5 | 204.01 | 205.55 | 205.92 | 206.20 | 206.23 | 206.21 | 206.26 | 206.68 | 206.06 | 206.71 |
| 12.5 - 15.0 | 205.30 | 206.88 | 207.26 | 207.54 | 207.57 | 207.57 | 207.60 | 208.06 | 207.40 | 208.09 |
| 15.0 - 17.5 | 206.68 | 208.29 | 208.67 | 208.95 | 208.99 | 208.99 | 209.01 | 209.50 | 208.81 | 209.53 |
| 17.5 - 20.0 | 208.10 | 209.71 | 210.09 | 210.38 | 210.41 | 210.43 | 210.43 | 210.94 | 210.23 | 210.97 |
| 20.0 - 22.5 | 209.52 | 211.11 | 211.48 | 211.76 | 211.78 | 211.83 | 211.81 | 212.34 | 211.62 | 212.37 |
| 22.5 - 25.0 | 210.87 | 212.40 | 212.75 | 213.01 | 213.03 | 213.11 | 213.07 | 213.61 | 212.88 | 213.63 |
| 25.0 - 27.5 | 212.08 | 213.48 | 213.80 | 214.03 | 214.04 | 214.17 | 214.08 | 214.64 | 213.92 | 214.66 |
| 27.5 - 30.0 | 213.02 | 214.21 | 214.46 | 214.65 | 214.66 | 214.83 | 214.69 | 215.27 | 214.56 | 215.28 |

slab temperature summary time = 0.0000 seconds
(assembly no. - channel no.)

| axial zone (inches) | ( 11) | ( 12) | ( 13) | ( 14) | ( 15) | ( 16) | ( 17) | ( 18) | ( 19) | ( 20) |
|---|---|---|---|---|---|---|---|---|---|---|
| 0.0 - 2.5 | 203.04 | 202.72 | 202.23 | 201.03 | 202.99 | 202.53 | 202.59 | 202.73 | 202.05 | 202.40 |
| 2.5 - 5.0 | 203.54 | 203.20 | 202.69 | 201.46 | 203.49 | 202.99 | 203.07 | 203.18 | 202.50 | 202.86 |
| 5.0 - 7.5 | 204.39 | 204.03 | 203.48 | 202.21 | 204.33 | 203.79 | 203.90 | 203.98 | 203.29 | 203.66 |
| 7.5 - 10.0 | 205.48 | 205.10 | 204.52 | 203.21 | 205.42 | 204.83 | 204.96 | 205.03 | 204.33 | 204.70 |
| 10.0 - 12.5 | 206.74 | 206.35 | 205.74 | 204.39 | 206.68 | 206.06 | 206.21 | 206.25 | 205.54 | 205.92 |
| 12.5 - 15.0 | 208.12 | 207.71 | 207.08 | 205.69 | 208.06 | 207.40 | 207.56 | 207.60 | 206.88 | 207.26 |
| 15.0 - 17.5 | 209.55 | 209.13 | 208.48 | 207.08 | 209.49 | 208.81 | 208.99 | 209.01 | 208.28 | 208.67 |
| 17.5 - 20.0 | 211.00 | 210.57 | 209.91 | 208.50 | 210.94 | 210.23 | 210.43 | 210.43 | 209.71 | 210.09 |

| | | | | | | | | | | |
|---|---|---|---|---|---|---|---|---|---|---|
| 20.0 - 22.5 | 212.40 | 211.97 | 211.30 | 209.91 | 212.34 | 211.62 | 211.83 | 211.81 | 211.10 | 211.48 |
| 22.5 - 25.0 | 213.67 | 213.24 | 212.58 | 211.24 | 213.61 | 212.88 | 213.11 | 213.06 | 212.40 | 212.75 |
| 25.0 - 27.5 | 214.69 | 214.28 | 213.65 | 212.41 | 214.64 | 213.92 | 214.16 | 214.08 | 213.48 | 213.80 |
| 27.5 - 30.0 | 215.31 | 214.93 | 214.35 | 213.29 | 215.27 | 214.56 | 214.83 | 214.69 | 214.21 | 214.46 |

slab temperature summary time = 0.0000 seconds
(assembly no. - channel no.)

| axial zone (inches) | ( 21) | ( 22) | ( 23) | ( 24) | ( 25) | ( 26) | ( 27) | ( 28) | ( 29) | ( 30) |
|---|---|---|---|---|---|---|---|---|---|---|
| 0.0 - 2.5 | 202.67 | 202.71 | 200.67 | 191.33 | 189.60 | 192.83 | 189.60 | 191.33 | 189.95 | 189.27 |
| 2.5 - 5.0 | 203.13 | 203.17 | 201.09 | 191.59 | 189.84 | 193.12 | 189.84 | 191.59 | 190.19 | 189.50 |
| 5.0 - 7.5 | 203.93 | 203.96 | 201.84 | 192.10 | 190.31 | 193.66 | 190.31 | 192.10 | 190.66 | 189.95 |
| 7.5 - 10.0 | 204.97 | 205.01 | 202.83 | 192.81 | 190.97 | 194.42 | 190.97 | 192.81 | 191.34 | 190.61 |
| 10.0 - 12.5 | 206.20 | 206.23 | 204.00 | 193.72 | 191.83 | 195.36 | 191.83 | 193.72 | 192.20 | 191.45 |
| 12.5 - 15.0 | 207.54 | 207.57 | 205.30 | 194.78 | 192.85 | 196.46 | 192.85 | 194.78 | 193.22 | 192.47 |
| 15.0 - 17.5 | 208.95 | 208.98 | 206.68 | 196.01 | 194.05 | 197.71 | 194.05 | 196.01 | 194.42 | 193.65 |
| 17.5 - 20.0 | 210.37 | 210.40 | 208.10 | 197.38 | 195.42 | 199.09 | 195.42 | 197.38 | 195.79 | 195.02 |
| 20.0 - 22.5 | 211.75 | 211.78 | 209.51 | 198.94 | 197.02 | 200.62 | 197.02 | 198.95 | 197.36 | 196.61 |
| 22.5 - 25.0 | 213.01 | 213.03 | 210.87 | 200.73 | 198.89 | 202.32 | 198.89 | 200.73 | 199.19 | 198.48 |
| 25.0 - 27.5 | 214.03 | 214.04 | 212.08 | 202.82 | 201.16 | 204.25 | 201.17 | 202.83 | 201.39 | 200.76 |
| 27.5 - 30.0 | 214.65 | 214.66 | 213.02 | 205.47 | 204.19 | 206.58 | 204.19 | 205.49 | 204.10 | 203.64 |

slab temperature summary time = 0.0000 seconds
(assembly no. - channel no.)

| axial zone (inches) | ( 31) | ( 32) | ( 33) | ( 34) | ( 35) | ( 36) | ( 37) | ( 38) | ( |
|---|---|---|---|---|---|---|---|---|---|
| 0.0 - 2.5 | 190.68 | 189.27 | 189.95 | 189.08 | 188.43 | 189.76 | 188.43 | 189.08 | |

| | | | | | | | | |
|---|---|---|---|---|---|---|---|---|
| 2.5 - 5.0 | 190.91 | 189.50 | 190.19 | 189.32 | 188.66 | 190.01 | 188.66 | 189.32 |
| 5.0 - 7.5 | 191.39 | 189.95 | 190.66 | 189.78 | 189.11 | 190.48 | 189.10 | 189.78 |
| 7.5 - 10.0 | 192.09 | 190.61 | 191.33 | 190.44 | 189.75 | 191.16 | 189.75 | 190.44 |
| 10.0 - 12.5 | 192.97 | 191.45 | 192.20 | 191.29 | 190.58 | 192.03 | 190.58 | 191.29 |
| 12.5 - 15.0 | 194.01 | 192.47 | 193.22 | 192.30 | 191.57 | 193.05 | 191.57 | 192.30 |
| 15.0 - 17.5 | 195.21 | 193.65 | 194.42 | 193.48 | 192.74 | 194.24 | 192.74 | 193.48 |
| 17.5 - 20.0 | 196.58 | 195.02 | 195.79 | 194.82 | 194.08 | 195.58 | 194.09 | 194.82 |
| 20.0 - 22.5 | 198.13 | 196.61 | 197.37 | 196.37 | 195.65 | 197.11 | 195.65 | 196.37 |
| 22.5 - 25.0 | 199.92 | 198.48 | 199.20 | 198.17 | 197.49 | 198.86 | 197.49 | 198.17 |
| 25.0 - 27.5 | 202.02 | 200.77 | 201.40 | 200.32 | 199.73 | 200.94 | 199.73 | 200.34 |
| 27.5 - 30.0 | 204.56 | 203.65 | 204.12 | 202.99 | 202.56 | 203.43 | 202.56 | 203.03 |

side boundary temperature summary time = 0.0000 seconds
boundary slab node no. 34

| axial zone (inches) | ( 1) | ( 2) | ( 3) | ( 4) | ( 5) | ( |
|---|---|---|---|---|---|---|
| 0.0 - 2.5 | 189.07 | 188.96 | 186.64 | 186.51 | 125.00 | |
| 2.5 - 5.0 | 189.31 | 189.20 | 186.86 | 186.74 | 125.00 | |
| 5.0 - 7.5 | 189.77 | 189.66 | 187.31 | 187.18 | 125.00 | |
| 7.5 - 10.0 | 190.44 | 190.33 | 187.95 | 187.81 | 125.00 | |
| 10.0 - 12.5 | 191.28 | 191.16 | 188.76 | 188.63 | 125.00 | |
| 12.5 - 15.0 | 192.29 | 192.18 | 189.73 | 189.59 | 125.00 | |
| 15.0 - 17.5 | 193.46 | 193.35 | 190.86 | 190.72 | 125.00 | |
| 17.5 - 20.0 | 194.81 | 194.69 | 192.15 | 192.01 | 125.00 | |
| 20.0 - 22.5 | 196.36 | 196.23 | 193.64 | 193.49 | 125.00 | |
| 22.5 - 25.0 | 198.16 | 198.03 | 195.38 | 195.23 | 125.00 | |
| 25.0 - 27.5 | 200.32 | 200.19 | 197.46 | 197.31 | 125.00 | |
| 27.5 - 30.0 | 202.99 | 202.85 | 200.04 | 199.87 | 125.00 | |

side boundary temperature summary time = 0.0000 seconds

boundary slab node no. 35

| axial zone (inches) | ( 1) | ( 2) | ( 3) | ( 4) | ( 5) | ( |
|---|---|---|---|---|---|---|
| 0.0 - 2.5 | 188.42 | 188.31 | 186.01 | 185.88 | 125.00 | |
| 2.5 - 5.0 | 188.65 | 188.54 | 186.23 | 186.10 | 125.00 | |
| 5.0 - 7.5 | 189.09 | 188.99 | 186.66 | 186.53 | 125.00 | |
| 7.5 - 10.0 | 189.74 | 189.63 | 187.28 | 187.15 | 125.00 | |
| 10.0 - 12.5 | 190.57 | 190.46 | 188.07 | 187.94 | 125.00 | |
| 12.5 - 15.0 | 191.57 | 191.45 | 189.03 | 188.90 | 125.00 | |
| 15.0 - 17.5 | 192.73 | 192.61 | 190.15 | 190.01 | 125.00 | |
| 17.5 - 20.0 | 194.08 | 193.96 | 191.44 | 191.30 | 125.00 | |
| 20.0 - 22.5 | 195.64 | 195.51 | 192.95 | 192.80 | 125.00 | |
| 22.5 - 25.0 | 197.48 | 197.36 | 194.72 | 194.57 | 125.00 | |
| 25.0 - 27.5 | 199.72 | 199.59 | 196.89 | 196.73 | 125.00 | |
| 27.5 - 30.0 | 202.56 | 202.42 | 199.62 | 199.45 | 125.00 | |

side boundary temperature summary time = 0.0000 seconds
boundary slab node no. 36

| axial zone (inches) | ( 1) | ( 2) | ( 3) | ( 4) | ( 5) | ( |
|---|---|---|---|---|---|---|
| 0.0 - 2.5 | 189.75 | 189.64 | 187.29 | 187.16 | 125.00 | |
| 2.5 - 5.0 | 190.00 | 189.89 | 187.53 | 187.40 | 125.00 | |
| 5.0 - 7.5 | 190.48 | 190.36 | 187.99 | 187.86 | 125.00 | |
| 7.5 - 10.0 | 191.16 | 191.05 | 188.64 | 188.51 | 125.00 | |
| 10.0 - 12.5 | 192.02 | 191.90 | 189.47 | 189.34 | 125.00 | |
| 12.5 - 15.0 | 193.05 | 192.93 | 190.46 | 190.32 | 125.00 | |
| 15.0 - 17.5 | 194.23 | 194.11 | 191.59 | 191.45 | 125.00 | |
| 17.5 - 20.0 | 195.57 | 195.45 | 192.89 | 192.74 | 125.00 | |
| 20.0 - 22.5 | 197.10 | 196.97 | 194.36 | 194.21 | 125.00 | |
| 22.5 - 25.0 | 198.86 | 198.73 | 196.05 | 195.90 | 125.00 | |

| | | | | | |
|---|---|---|---|---|---|
| 25.0 - 27.5 | 200.93 | 200.80 | 198.05 | 197.89 | 125.00 |
| 27.5 - 30.0 | 203.43 | 203.29 | 200.46 | 200.30 | 125.00 |

side boundary temperature summary time = 0.0000 seconds
boundary slab node no. 37

| axial zone (inches) | ( 1) | ( 2) | ( 3) | ( 4) | ( 5) | ( |
|---|---|---|---|---|---|---|
| 0.0 - 2.5 | 188.42 | 188.31 | 186.01 | 185.88 | 125.00 | |
| 2.5 - 5.0 | 188.65 | 188.54 | 186.23 | 186.10 | 125.00 | |
| 5.0 - 7.5 | 189.09 | 188.99 | 186.66 | 186.53 | 125.00 | |
| 7.5 - 10.0 | 189.74 | 189.63 | 187.28 | 187.15 | 125.00 | |
| 10.0 - 12.5 | 190.57 | 190.46 | 188.07 | 187.94 | 125.00 | |
| 12.5 - 15.0 | 191.57 | 191.45 | 189.03 | 188.90 | 125.00 | |
| 15.0 - 17.5 | 192.73 | 192.61 | 190.15 | 190.01 | 125.00 | |
| 17.5 - 20.0 | 194.08 | 193.96 | 191.44 | 191.30 | 125.00 | |
| 20.0 - 22.5 | 195.64 | 195.52 | 192.95 | 192.80 | 125.00 | |
| 22.5 - 25.0 | 197.49 | 197.36 | 194.73 | 194.58 | 125.00 | |
| 25.0 - 27.5 | 199.73 | 199.60 | 196.89 | 196.73 | 125.00 | |
| 27.5 - 30.0 | 202.56 | 202.42 | 199.62 | 199.46 | 125.00 | |

side boundary temperature summary time = 0.0000 seconds
boundary slab node no. 38

| axial zone (inches) | ( 1) | ( 2) | ( 3) | ( 4) | ( 5) | ( |
|---|---|---|---|---|---|---|
| 0.0 - 2.5 | 189.07 | 188.96 | 186.64 | 186.51 | 125.00 | |
| 2.5 - 5.0 | 189.31 | 189.20 | 186.86 | 186.74 | 125.00 | |
| 5.0 - 7.5 | 189.77 | 189.66 | 187.31 | 187.18 | 125.00 | |

| | | | | | |
|---|---|---|---|---|---|
| 7.5 - 10.0 | 190.44 | 190.32 | 187.95 | 187.81 | 125.00 |
| 10.0 - 12.5 | 191.28 | 191.16 | 188.76 | 188.62 | 125.00 |
| 12.5 - 15.0 | 192.29 | 192.18 | 189.73 | 189.59 | 125.00 |
| 15.0 - 17.5 | 193.46 | 193.35 | 190.86 | 190.72 | 125.00 |
| 17.5 - 20.0 | 194.81 | 194.69 | 192.15 | 192.01 | 125.00 |
| 20.0 - 22.5 | 196.36 | 196.23 | 193.64 | 193.49 | 125.00 |
| 22.5 - 25.0 | 198.17 | 198.04 | 195.38 | 195.23 | 125.00 |
| 25.0 - 27.5 | 200.33 | 200.20 | 197.47 | 197.32 | 125.00 |
| 27.5 - 30.0 | 203.03 | 202.89 | 200.08 | 199.91 | 125.00 |

upper plenum side temperature summary time = 0.0000 seconds

| ( 1) | ( 2) | ( 3) | ( 4) | ( 5) | ( 6) | ( 7) | ( |
|---|---|---|---|---|---|---|---|
| 238.69 | 214.20 | 208.76 | 207.31 | 207.13 | 205.16 | 125.00 | |

upper plenum axialtemperature summary time = 0.0000 seconds

| ( 1) | ( 2) | ( 3) | ( 4) | ( 5) | ( |
|---|---|---|---|---|---|
| 238.69 | 238.01 | 236.60 | 234.52 | 125.00 | |

calculated rod temperatures at time = 0.0000 seconds
rod no. 1
assembly 1 (fuel type 1 - cylinder)
0rod o.d. - 0.563 (in.) zone-(fuel dia.(in.)) - 1-(0.563)

| axial zone (in.) | heat flux (mbtu/hr-ft2) | type | hsurf (b/h-f-ft2) | * fuel temperatures(f.) fluid | clad |
|---|---|---|---|---|---|
| 0.0 - 2.5 | 0.0002 | 1 | 0.9 | 229.7 | 401.1 |
| 2.5 - 5.0 | 0.0001 | 1 | 0.9 | 249.4 | 411.0 |
| 5.0 - 7.5 | 0.0001 | 1 | 0.9 | 266.3 | 419.7 |
| 7.5 - 10.0 | 0.0001 | 1 | 1.0 | 280.7 | 427.3 |
| 10.0 - 12.5 | 0.0001 | 1 | 1.0 | 293.1 | 434.0 |
| 12.5 - 15.0 | 0.0001 | 1 | 1.0 | 303.8 | 439.8 |

| | | | | | | |
|---|---|---|---|---|---|---|
| 15.0 - 17.5 | 0.0001 | 1 | 1.0 | 313.1 | 444.9 |
| 17.5 - 20.0 | 0.0001 | 1 | 1.0 | 321.0 | 449.3 |
| 20.0 - 22.5 | 0.0001 | 1 | 1.0 | 327.9 | 453.1 |
| 22.5 - 25.0 | 0.0001 | 1 | 1.0 | 333.9 | 456.5 |
| 25.0 - 27.5 | 0.0001 | 1 | 1.0 | 339.1 | 459.4 |
| 27.5 - 30.0 | 0.0001 | 1 | 1.0 | 343.6 | 461.9 |

calculated rod temperatures at time = 0.0000 seconds
rod no. 2
assembly 1 (fuel type 1 - cylinder)
0rod o.d. - 0.563 (in.) zone-(fuel dia.(in.)) - 1-(0.563)

| axial zone (in.) | heat flux (mbtu/hr-ft2) | type | hsurf (b/h-f-ft2) | * fuel temperatures(f.) fluid | clad |
|---|---|---|---|---|---|
| 0.0 - 2.5 | 0.0002 | 1 | 0.9 | 229.7 | 401.1 |
| 2.5 - 5.0 | 0.0001 | 1 | 0.9 | 249.4 | 411.0 |
| 5.0 - 7.5 | 0.0001 | 1 | 0.9 | 266.3 | 419.7 |
| 7.5 - 10.0 | 0.0001 | 1 | 1.0 | 280.7 | 427.3 |
| 10.0 - 12.5 | 0.0001 | 1 | 1.0 | 293.1 | 434.0 |
| 12.5 - 15.0 | 0.0001 | 1 | 1.0 | 303.8 | 439.8 |
| 15.0 - 17.5 | 0.0001 | 1 | 1.0 | 313.1 | 444.9 |
| 17.5 - 20.0 | 0.0001 | 1 | 1.0 | 321.0 | 449.3 |
| 20.0 - 22.5 | 0.0001 | 1 | 1.0 | 327.9 | 453.1 |
| 22.5 - 25.0 | 0.0001 | 1 | 1.0 | 333.9 | 456.5 |
| 25.0 - 27.5 | 0.0001 | 1 | 1.0 | 339.1 | 459.4 |
| 27.5 - 30.0 | 0.0001 | 1 | 1.0 | 343.6 | 461.9 |

calculated rod temperatures at time = 0.0000 seconds
rod no. 3
assembly 1 (fuel type 1 - cylinder)
0rod o.d. - 0.563 (in.) zone-(fuel dia.(in.)) - 1-(0.563)

* fuel temperatures(f.)

| axial zone (in.) | heat flux (mbtu/hr-ft2) | type | hsurf (b/h-f-ft2) | fluid | clad |
|---|---|---|---|---|---|
| 0.0 - 2.5 | 0.0002 | 1 | 0.9 | 229.7 | 401.1 |
| 2.5 - 5.0 | 0.0001 | 1 | 0.9 | 249.4 | 411.0 |
| 5.0 - 7.5 | 0.0001 | 1 | 0.9 | 266.3 | 419.8 |
| 7.5 - 10.0 | 0.0001 | 1 | 1.0 | 280.8 | 427.4 |
| 10.0 - 12.5 | 0.0001 | 1 | 1.0 | 293.2 | 434.0 |
| 12.5 - 15.0 | 0.0001 | 1 | 1.0 | 303.9 | 439.8 |
| 15.0 - 17.5 | 0.0001 | 1 | 1.0 | 313.2 | 444.9 |
| 17.5 - 20.0 | 0.0001 | 1 | 1.0 | 321.2 | 449.3 |
| 20.0 - 22.5 | 0.0001 | 1 | 1.0 | 328.1 | 453.2 |
| 22.5 - 25.0 | 0.0001 | 1 | 1.0 | 334.1 | 456.5 |
| 25.0 - 27.5 | 0.0001 | 1 | 1.0 | 339.2 | 459.5 |
| 27.5 - 30.0 | 0.0001 | 1 | 1.0 | 343.7 | 461.9 |

calculated rod temperatures at time = 0.0000 seconds
rod no. 4
assembly 1 (fuel type 1 - cylinder)
0rod o.d. - 0.563 (in.) zone-(fuel dia.(in.)) - 1-(0.563)

| axial zone (in.) | heat flux (mbtu/hr-ft2) | type | hsurf (b/h-f-ft2) | fuel temperatures(f.) fluid | clad |
|---|---|---|---|---|---|
| 0.0 - 2.5 | 0.0002 | 1 | 0.9 | 229.7 | 401.1 |
| 2.5 - 5.0 | 0.0001 | 1 | 0.9 | 249.4 | 411.0 |
| 5.0 - 7.5 | 0.0001 | 1 | 0.9 | 266.3 | 419.7 |
| 7.5 - 10.0 | 0.0001 | 1 | 1.0 | 280.7 | 427.4 |
| 10.0 - 12.5 | 0.0001 | 1 | 1.0 | 293.2 | 434.0 |
| 12.5 - 15.0 | 0.0001 | 1 | 1.0 | 303.9 | 439.8 |
| 15.0 - 17.5 | 0.0001 | 1 | 1.0 | 313.1 | 444.9 |
| 17.5 - 20.0 | 0.0001 | 1 | 1.0 | 321.1 | 449.3 |
| 20.0 - 22.5 | 0.0001 | 1 | 1.0 | 328.0 | 453.1 |
| 22.5 - 25.0 | 0.0001 | 1 | 1.0 | 334.0 | 456.5 |
| 25.0 - 27.5 | 0.0001 | 1 | 1.0 | 339.1 | 459.4 |
| 27.5 - 30.0 | 0.0001 | 1 | 1.0 | 343.6 | 461.9 |

calculated rod temperatures at time = 0.0000 seconds
rod no. 1
assembly 2 (fuel type 1 - cylinder)
0rod o.d. - 0.563 (in.) zone-(fuel dia.(in.)) - 1-(0.563)

| axial zone (in.) | heat flux (mbtu/hr-ft2) | type | hsurf (b/h-f-ft2) | fuel temperatures(f.) fluid | clad |
|---|---|---|---|---|---|
| 0.0 - 2.5 | 0.0002 | 1 | 0.9 | 229.7 | 401.1 |
| 2.5 - 5.0 | 0.0001 | 1 | 0.9 | 249.4 | 411.0 |
| 5.0 - 7.5 | 0.0001 | 1 | 0.9 | 266.3 | 419.8 |
| 7.5 - 10.0 | 0.0001 | 1 | 1.0 | 280.8 | 427.4 |
| 10.0 - 12.5 | 0.0001 | 1 | 1.0 | 293.2 | 434.0 |
| 12.5 - 15.0 | 0.0001 | 1 | 1.0 | 303.9 | 439.8 |
| 15.0 - 17.5 | 0.0001 | 1 | 1.0 | 313.2 | 444.9 |
| 17.5 - 20.0 | 0.0001 | 1 | 1.0 | 321.2 | 449.3 |
| 20.0 - 22.5 | 0.0001 | 1 | 1.0 | 328.1 | 453.2 |
| 22.5 - 25.0 | 0.0001 | 1 | 1.0 | 334.1 | 456.5 |
| 25.0 - 27.5 | 0.0001 | 1 | 1.0 | 339.2 | 459.5 |
| 27.5 - 30.0 | 0.0001 | 1 | 1.0 | 343.7 | 461.9 |

calculated rod temperatures at time = 0.0000 seconds
rod no. 2
assembly 2 (fuel type 1 - cylinder)
0rod o.d. - 0.563 (in.) zone-(fuel dia.(in.)) - 1-(0.563)

| axial zone (in.) | heat flux (mbtu/hr-ft2) | type | hsurf (b/h-f-ft2) | fuel temperatures(f.) fluid | clad |
|---|---|---|---|---|---|
| 0.0 - 2.5 | 0.0002 | 1 | 0.9 | 229.7 | 401.1 |
| 2.5 - 5.0 | 0.0001 | 1 | 0.9 | 249.4 | 411.0 |
| 5.0 - 7.5 | 0.0001 | 1 | 0.9 | 266.3 | 419.7 |

| | | | | | | |
|---|---|---|---|---|---|---|
| 7.5 - 10.0 | 0.0001 | 1 | 1.0 | 280.7 | 427.4 |
| 10.0 - 12.5 | 0.0001 | 1 | 1.0 | 293.2 | 434.0 |
| 12.5 - 15.0 | 0.0001 | 1 | 1.0 | 303.9 | 439.8 |
| 15.0 - 17.5 | 0.0001 | 1 | 1.0 | 313.1 | 444.9 |
| 17.5 - 20.0 | 0.0001 | 1 | 1.0 | 321.1 | 449.3 |
| 20.0 - 22.5 | 0.0001 | 1 | 1.0 | 328.0 | 453.1 |
| 22.5 - 25.0 | 0.0001 | 1 | 1.0 | 334.0 | 456.5 |
| 25.0 - 27.5 | 0.0001 | 1 | 1.0 | 339.1 | 459.4 |
| 27.5 - 30.0 | 0.0001 | 1 | 1.0 | 343.6 | 461.9 |

calculated rod temperatures at time = 0.0000 seconds
rod no. 3
assembly 2 (fuel type 1 - cylinder)
0rod o.d. - 0.563 (in.) zone-(fuel dia.(in.)) - 1-(0.563)

| axial zone (in.) | heat flux (mbtu/hr-ft2) | type | hsurf (b/h-f-ft2) | fuel temperatures(f.) fluid | clad |
|---|---|---|---|---|---|
| 0.0 - 2.5 | 0.0002 | 1 | 0.9 | 229.7 | 401.1 |
| 2.5 - 5.0 | 0.0001 | 1 | 0.9 | 249.4 | 411.0 |
| 5.0 - 7.5 | 0.0001 | 1 | 0.9 | 266.3 | 419.7 |
| 7.5 - 10.0 | 0.0001 | 1 | 1.0 | 280.7 | 427.3 |
| 10.0 - 12.5 | 0.0001 | 1 | 1.0 | 293.1 | 434.0 |
| 12.5 - 15.0 | 0.0001 | 1 | 1.0 | 303.8 | 439.8 |
| 15.0 - 17.5 | 0.0001 | 1 | 1.0 | 313.1 | 444.9 |
| 17.5 - 20.0 | 0.0001 | 1 | 1.0 | 321.0 | 449.3 |
| 20.0 - 22.5 | 0.0001 | 1 | 1.0 | 327.9 | 453.1 |
| 22.5 - 25.0 | 0.0001 | 1 | 1.0 | 333.9 | 456.5 |
| 25.0 - 27.5 | 0.0001 | 1 | 1.0 | 339.1 | 459.4 |
| 27.5 - 30.0 | 0.0001 | 1 | 1.0 | 343.6 | 461.9 |

calculated rod temperatures at time = 0.0000 seconds
rod no. 4
assembly 2 (fuel type 1 - cylinder)

```
0rod o.d. - 0.563 (in.)     zone-(fuel dia.(in.)) -  1-(0.563)

                                                 *  fuel temperatures(f.)
                                                 *
  axial zone  heat flux   type          hsurf   *  fluid    clad
     (in.)    (mbtu/hr-ft2)          (b/h-f-ft2) *
   0.0 -   2.5    0.0002    1              0.9      229.7    401.1
   2.5 -   5.0    0.0001    1              0.9      249.4    411.0
   5.0 -   7.5    0.0001    1              0.9      266.3    419.7
   7.5 -  10.0    0.0001    1              1.0      280.7    427.3
  10.0 -  12.5    0.0001    1              1.0      293.1    434.0
  12.5 -  15.0    0.0001    1              1.0      303.8    439.8
  15.0 -  17.5    0.0001    1              1.0      313.1    444.9
  17.5 -  20.0    0.0001    1              1.0      321.0    449.3
  20.0 -  22.5    0.0001    1              1.0      327.9    453.1
  22.5 -  25.0    0.0001    1              1.0      333.9    456.5
  25.0 -  27.5    0.0001    1              1.0      339.1    459.4
  27.5 -  30.0    0.0001    1              1.0      343.6    461.9


 iterations =   14


  input transient time completed


 common dumped to tape 8
1***** computational time summary *****


     subroutine energy.....................    5.07  sec
     subroutine moment.....................    0.12  sec
     subroutine reheat.....................    0.51  sec
     subroutine recirc (pressure loop)....    0.34  sec
     subroutine result.....................    0.19  sec
     subroutine setup......................    0.34  sec
     other subroutines.....................    0.92  sec

     total cpu time........................    7.49  sec
```

# APPENDIX F

## SAMPLE PROBLEM NUMBER 2 OUTPUT

# APPENDIX F

## SAMPLE PROBLEM NUMBER 2 OUTPUT

```
1          * * * * * * * * * * * * * * * * * * * * * * * * * * * * * * * * * * * * * * * * * *
           this is the cobra-sfs (spent fuel storage) code for multiassembly spent fuel cask analysis
                      written  at pacific northwest laboratory 1982-1986
                      creation date for this version (cycle  0) - 11-01-86

           * * * * * * * * * * * * * * * * * * * * * * * * * * * * * * * * * * * * * * * * * *
                      contact d.r. rector (509) 375-2300
                              c.l. wheeler (509) 375-2681
                              n.j. lombardo (509) 375-3644
                              t.e. michener (509) 375-2162
```

cobra dimension parameters:

| | | | | | |
|---|---|---|---|---|---|
| id= | 6 | ie= | 40 | lif= | 15 |
| ih= | 9 | lip= | 8 | iq= | 7 |
| ir= | 9 | lit= | 3 | iu= | 6 |
| liw= | 6 | ix= | 8 | liz= | 15 |
| la= | 15 | lb= | 1 | llc= | 1 |
| ld= | 1 | le= | 1 | lf= | 1 |
| ma= | 20 | mc= | 30 | me= | 40 |
| mg= | 55 | mh= | 11 | mi= | 12 |
| mj= | 1 | mk= | 3 | ml= | 9 |
| lmm= | 29 | mn= | 6 | mp= | 31 |
| mq= | 40 | mr= | 50 | ms= | 30 |
| mt= | 10 | mw= | 60 | mx= | 40 |
| my= | 4 | nd= | 9 | no= | 1 |
| nv= | 2 | lnz= | 10 | | |

```
1***** the following is an image listing of the cobra-sfs input cards *****
        radx generated input is not included
0       0       1       2       3       4       5       6       7       8
        12345678901234567890123456789012345678901234567890123456789012345678901234567890

   2       2          EXAMPLE PROBLEM  2 FOR COBRA-SFS
   3    prop    2   5
   4           0.     400.     399.     25.5     .998     .032     .87
   5           0.    4600.    4590.     45.0     .998     .092     .35
   6       1 zirk     0.0      0.0     34.8
   7       2 sstl     0.0      0.0      8.1
   8       3 helm     0.0      0.0     .208
   9       4 sodm     0.0      0.0     43.8
  10       5 argn     0.0      0.0     .025
  11    chan    2  18   5
  12        124.2      0.
  13       2  2.1   4  4.5   4  4.5   3  8.0   5  12.
  14       1   1  18
  15       1   1   0   0   1
  16       1.16051.048.4325   2.2140.2476   10.1776.5013
  17       2.0658.3707.3707   3.2140.2598
  18       3.0658.3707.3707   4.2140.2598   11.2140.2598
  19       4.0658.3707.3707   5.2140.2598
  20       5.0658.3707.3707   6.2140.2598   13.2140.2598
  21       6.0658.3707.3707   7.2140.2598
  22       7.0658.3707.3707   8.2140.2598   15.2140.2598
  23       8.0658.3707.3707   9.2140.2476
  24       9.16051.048.4325  16.1776.5013
  25      10.16051.048.4325  11.2140.2476   17.0570.5013
  26      11.0658.3707.3707  12.2140.2598
  27      12.0658.3707.3707  13.2140.2598   17.2140.2476
  28      13.0658.3707.3707  14.2140.2598
  29      14.0658.3707.3707  15.2140.2598   18.2140.2476
  30      15.0658.3707.3707  16.2140.2476
  31      16.16051.048.4325  18.0570.5013
  32      17.16051.048.4325  18.1776.5013
  33      18.16051.048.4325
  34       2   2   6
  35       1   2   0   0   2
```

```
36        1.2748 1.72        2.4275.8188
37        2.2748 1.72        3.4275.8188
38        3.2748 1.72        4.4275.8188
39        4.2748 1.72        5.4275.8188
40        5.2748 1.72        6.4275.8188
41        6.2748 1.72
42
43     vary    18    4    1   24    4
44      0.0 .320 .330  1.0
45        1    1
46      1.0  1.01.1591.159
47        1    2
48      1.0  1.01.3331.333
49        1    3
50      1.0  1.01.3331.333
51        1    4
0       0       1        2        3        4        5        6        7        8
        12345678901234567890123456789012345678901234567890123456789012345678901234567890

1
0       0       1        2        3        4        5        6        7        8
        12345678901234567890123456789012345678901234567890123456789012345678901234567890

52      1.0  1.01.0151.015
53        1    5
54      1.0  1.01.0151.015
55        1    6
56      1.0  1.01.0151.015
57        1    7
58      1.0  1.01.3331.333
59        1    8
60      1.0  1.01.3331.333
61        1    9
62      1.0  1.01.1591.159
63        1   10
64      1.0  1.01.1591.159
65        1   11
66      1.0  1.01.3331.333
67        1   12
```

```
 68      1.0  1.01.3331.333
 69        1   13
 70      1.0  1.01.3331.333
 71        1   14
 72      1.0  1.01.3331.333
 73        1   15
 74      1.0  1.01.3331.333
 75        1   16
 76      1.0  1.01.1591.159
 77        1   17
 78      1.0  1.01.1591.159
 79        1   18
 80      1.0  1.01.1591.159
 81      0.0 .320 .330  1.0
 82        1    1
 83      1.0  1.02.1032.103
 84        1    2
 85      1.0  1.0 1.66 1.66
 86        1    3
 87      1.0  1.02.1032.103
 88        1    4
 89      1.0  1.02.1032.103
 90        1    5
 91      1.0  1.02.1032.103
 92        1    6
 93      1.0  1.01.1361.136
 94        1    7
 95      1.0  1.02.1032.103
 96        1    8
 97      1.0  1.01.1361.136
 98        1    9
 99      1.0  1.02.1032.103
100        1   10
101      1.0  1.02.1032.103
102        1   11
103      1.0  1.02.1032.103
104        1   12
105      1.0  1.02.1032.103
0        0        1        2        3        4        5        6        7        8
```

```
        12345678901234567890123456789012345678901234567890123456789012345678901234567890

1
0       0       1         2         3         4         5         6         7         8
        12345678901234567890123456789012345678901234567890123456789012345678901234567890

  106     1   13
  107   1.0  1.0 1.66 1.66
  108     1   14
  109   1.0  1.02.1032.103
  110     1   15
  111   1.0  1.0 4.38 4.38
  112     1   16
  113   1.0  1.02.1032.103
  114     1   17
  115   1.0  1.02.1032.103
  116     1   18
  117   1.0  1.02.1032.103
  118     1   19
  119   1.0  1.02.1032.103
  120     1   20
  121   1.0  1.02.1032.103
  122     1   21
  123   1.0  1.02.1032.103
  124     1   22
  125   1.0  1.02.1032.103
  126     1   23
  127   1.0  1.0 4.38 4.38
  128     1   24
  129   1.0  1.0 1.66 1.66
  130  rods    1    1    1    0    0
  131     1    1   12
  132     1 .236 1.05    1  .33    2 .167
  133     2 .2361.025    2 .167    3 .167    4 .167
  134     3 .236 1.00    4 .167    5 .167    6 .167
  135     4 .236 .975    6 .167    7 .167    8 .167
  136     5 .236 .950    8 .167    9 .330
  137     6 .2361.038    1 .250    2 .167    3 .167   10 .250   11 .167
  138     7 .2361.013    3 .167    4 .167    5 .167   11 .167   12 .167   13 .167
```

```
 139        8 .236 .987    5 .167    6 .167    7 .167   13 .167   14 .167   15 .167
 140        9 .236 .962    7 .167    8 .167    9 .250   15 .167   16 .250
 141       10 .2361.025   10 .333   11 .167   12 .167   17 .333
 142       11 .236 1.00   12 .167   13 .167   14 .167   17 .250   18 .250
 143       12 .236 .975   14 .167   15 .167   16 .333   18 .333
 144        2   0   0
 145      1.0  1.0  1.0 .236  1.0  1.0  1.0  1.0  1.0 .236
 146     slab    8   3   30
 147        1                        1286.
 148        2                         7.85    22930.  .30  .30 .628
 149        3                        1445.
 150        4                        1977.
 151        5                         5.28     1600.  .30  .30 .983
 152        6                        2138.
 153        7                        12.67      6.20         1.075
 154        8                        9538.
 155        1    1.0308            2    2    1    7    2
 156        2    1.0308            2    3    1    8    2
 157        3    1.0308            2    4    1    9    2
 158        4    1.0308            2    5    1   10    2
 159        5    1.0308            2    6    1   11    2
0        0        1        2        3        4        5        6        7        8
         12345678901234567890123456789012345678901234567890123456789012345678901234567890

1
0        0        1        2        3        4        5        6        7        8
         12345678901234567890123456789012345678901234567890123456789012345678901234567890

 160        6    1.0308            1   12    2
 161        7    1.0347            1    8    3
 162        8    1.0347            1    9    3
 163        9    1.0347            1   10    3
 164       10    1.0347            1   11    3
 165       11    1.0347            1   12    3
 166       12    1.0347
 167       13    1.0472            2   14    4   19    5
 168       14    1.0472            2   15    4   20    5
 169       15    1.0472            2   16    4   21    5
 170       16    1.0472            2   17    4   22    5
```

```
171      17   1.0472            2  18   4  23   5
172      18   1.0472            1  24   5
173      19   1.0511            2  20   6  25   7
174      20   1.0511            2  21   6  26   7
175      21   1.0511            2  22   6  27   7
176      22   1.0511            2  23   6  28   7
177      23   1.0511            2  24   6  29   7
178      24   1.0511            1  30   7
179      25   2.0545            1  26   8
180      26   2.0545            1  27   8
181      27   2.0545            1  28   8
182      28   2.0545            1  29   8
183      29   2.0545            1  30   8
184      30   2.0545
185       1     3.68     .707
186       2     2.80     .931
187       3     4.33     .602
188       1   1   1   1   3
189       2   1   1  10   3
190       3   1   1  17   3
191       4   1   1  18   3
192       5   1   1  16   3
193       6   1   1   9   3
194       7   1   2   1   1
195       8   1   2   2   1
196       9   1   2   3   1
197      10   1   2   4   1
198      11   1   2   5   1
199      12   1   2   6   1
200      13   1   2   1   2
201      14   1   2   2   2
202      15   1   2   3   2
203      16   1   2   4   2
204      17   1   2   5   2
205      18   1   2   6   2
206
207    heat   2   0   1
208       0   0   0              15.0
209       0   0   0              8.45
```

```
 210      1.0  1.0
 211    drag     2
 212                              66. -1.0
 213                              88. -1.0
0        0        1        2        3        4        5        6        7        8
        12345678901234567890123456789012345678901234567890123456789012345678901234567890

1
0        0        1        2        3        4        5        6        7        8
        12345678901234567890123456789012345678901234567890123456789012345678901234567890

 214    bdry     1    1    6   0
 215        1 .008
 216        1    5  0.0 680.  .25 710.  .50 740.  .75 770.  1.0 800.
 217       25    11.104    1
 218        11.104    1  1.0    1
 219       26    11.104    1
 220        11.104    1  1.0    1
 221       27    11.104    1
 222        11.104    1  1.0    1
 223       28    11.104    1
 224        11.104    1  1.0    1
 225       29    11.104    1
 226        11.104    1  1.0    1
 227       30    11.104    1
 228        11.104    1  1.0    1
 229    calc     0
 230       0.
 231            30
 232    oper     1    0    3                                                  1
 233           0.0    1500.0      .100      39.3    1680.0
 234        6
 235       0.  0.0 .033  0.0 .034  1.0.1790  1.0.1792  0.0  1.0  0.0
 236    outp     1
 237    endd
0        0        1        2        3        4        5        6        7        8
        12345678901234567890123456789012345678901234567890123456789012345678901234567890

1input for case     1         EXAMPLE PROBLEM  2 FOR COBRA-SFS                        date  86/11/25 time  15:34:25
```

summary of input options

| group | n1 | n2 | n3 | n4 | n5 | n6 | n7 | n8 | n9 | n10 | n11 | n12 | n13 | n14 | n15 |
|---|---|---|---|---|---|---|---|---|---|---|---|---|---|---|---|
| prop | 2 | 5 | 0 | 0 | 0 | 0 | 0 | 0 | 0 | 0 | 0 | 0 | 0 | 0 | 0 |
| chan | 2 | 18 | 5 | 0 | 0 | 0 | 0 | 0 | 0 | 0 | 0 | 0 | 0 | 0 | 0 |
| vary | 18 | 4 | 1 | 24 | 4 | 0 | 0 | 0 | 0 | 0 | 0 | 0 | 0 | 0 | 0 |
| rods | 1 | 1 | 1 | 0 | 0 | 0 | 0 | 0 | 0 | 0 | 0 | 0 | 0 | 0 | 0 |
| slab | 8 | 3 | 30 | 0 | 0 | 0 | 0 | 0 | 0 | 0 | 0 | 0 | 0 | 0 | 0 |
| heat | 2 | 0 | 1 | 0 | 0 | 0 | 0 | 0 | 0 | 0 | 0 | 0 | 0 | 0 | 0 |
| drag | 2 | 0 | 0 | 0 | 0 | 0 | 0 | 0 | 0 | 0 | 0 | 0 | 0 | 0 | 0 |
| bdry | 1 | 1 | 6 | 0 | 0 | 0 | 0 | 0 | 0 | 0 | 0 | 0 | 0 | 0 | 0 |
| calc | 0 | 0 | 0 | 0 | 0 | 0 | 0 | 0 | 0 | 0 | 0 | 0 | 0 | 0 | 0 |
| oper | 1 | 0 | 3 | 0 | 0 | 0 | 0 | 0 | 0 | 0 | 0 | 0 | 0 | 1 | 0 |
| outp | 1 | 0 | 0 | 0 | 0 | 0 | 0 | 0 | 0 | 0 | 0 | 0 | 0 | 0 | 0 |
| endd | 0 | 0 | 0 | 0 | 0 | 0 | 0 | 0 | 0 | 0 | 0 | 0 | 0 | 0 | 0 |

fluid property table

| pliq (psia) | temliq (f) | hliq (btu/lbm) | conliq (btu/hr-ft-f) | cpliq (btu/lbm-f) | vliq (ft3/lbm) | visliq (lbm/hr-ft) |
|---|---|---|---|---|---|---|
| 0.0000 | 400.0000 | 399.0000 | 25.5000 | 0.9980 | 0.0320 | 0.8700 |
| 0.0000 | 4600.0000 | 4590.0000 | 45.0000 | 0.9980 | 0.0920 | 0.3500 |

solid property table

| type | material | consol (btu/hr-ft-f) | cpsol (btu/hr-f) | rhosol (lbm/ft5) |
|---|---|---|---|---|
| 1 | zirk | 34.80 | 0.0000 | 0.0000 |
| 2 | sstl | 8.10 | 0.0000 | 0.0000 |
| 3 | helm | 0.21 | 0.0000 | 0.0000 |
| 4 | sodm | 43.80 | 0.0000 | 0.0000 |
| 5 | argn | 0.03 | 0.0000 | 0.0000 |

friction factor correlations

```
type 1   f=max of (   0.000*re**( 0.000) +   0.000*re**( 0.000) + 0.0000) or (  66.000*re**(-1.000) +   0.000)
type 2   f=max of (   0.000*re**( 0.000) +   0.000*re**( 0.000) + 0.0000) or (  88.000*re**(-1.000) +   0.000)
```

heat transfer correlations

```
type 1  h= max of ( k/d(0.000*re**(0.000)*pr**(0.000) + 0.000) or ( k/d(0.000*re**(0.000)*pr**(0.000) + *****)
type 2  h= max of ( k/d(0.000*re**(0.000)*pr**(0.000) + 0.000) or ( k/d(0.000*re**(0.000)*pr**(0.000) + 8.450)
```

assembly number 1 input description

---

axial heat flux profile number 1 heat transfer correlation number 1

heat flux vs. time profile number 0 inlet flow vs. time profile number 0

subchannel input data for assembly number 1

| loc. ch. no. | glb. ch. no. | frictn factor type | area (sq-in) | wetted perim. (in) | heated perim. (in) | hydraulic diameter (in) | (adjacent channel no., momentum control volume width and length) | | | |
|---|---|---|---|---|---|---|---|---|---|---|
| 1 | 1 | 1 | 0.1605 | 1.0480 | 0.4325 | 0.6126 | ( 2, 0.214, 0.248) | ( 10, 0.178, 0.501) | ( 0, 0.000, 0.000) | ( 0, 0.000, 0.000) |
| 2 | 2 | 1 | 0.0658 | 0.3707 | 0.3707 | 0.7100 | ( 3, 0.214, 0.260) | ( 0, 0.000, 0.000) | ( 0, 0.000, 0.000) | ( 0, 0.000, 0.000) |
| 3 | 3 | 1 | 0.0658 | 0.3707 | 0.3707 | 0.7100 | ( 4, 0.214, 0.260) | ( 11, 0.214, 0.260) | ( 0, 0.000, 0.000) | ( 0, 0.000, 0.000) |
| 4 | 4 | 1 | 0.0658 | 0.3707 | 0.3707 | 0.7100 | ( 5, 0.214, 0.260) | ( 0, 0.000, 0.000) | ( 0, 0.000, 0.000) | ( 0, 0.000, 0.000) |
| 5 | 5 | 1 | 0.0658 | 0.3707 | 0.3707 | 0.7100 | ( 6, 0.214, 0.260) | ( 13, 0.214, 0.260) | ( 0, 0.000, 0.000) | ( 0, 0.000, 0.000) |
| 6 | 6 | 1 | 0.0658 | 0.3707 | 0.3707 | 0.7100 | ( 7, 0.214, 0.260) | ( 0, 0.000, 0.000) | ( 0, 0.000, 0.000) | ( 0, 0.000, 0.000) |
| 7 | 7 | 1 | 0.0658 | 0.3707 | 0.3707 | 0.7100 | ( 8, 0.214, 0.260) | ( 15, 0.214, 0.260) | ( 0, 0.000, 0.000) | ( 0, 0.000, 0.000) |
| 8 | 8 | 1 | 0.0658 | 0.3707 | 0.3707 | 0.7100 | ( 9, 0.214, 0.248) | ( 0, 0.000, 0.000) | ( 0, 0.000, 0.000) | ( 0, 0.000, 0.000) |
| 9 | 9 | 1 | 0.1605 | 1.0480 | 0.4325 | 0.6126 | ( 16, 0.178, 0.501) | ( 0, 0.000, 0.000) | ( 0, 0.000, 0.000) | ( 0, 0.000, 0.000) |
| 10 | 10 | 1 | 0.1605 | 1.0480 | 0.4325 | 0.6126 | ( 11, 0.214, 0.248) | ( 17, 0.057, 0.501) | ( 0, 0.000, 0.000) | ( 0, 0.000, 0.000) |
| 11 | 11 | 1 | 0.0658 | 0.3707 | 0.3707 | 0.7100 | ( 12, 0.214, 0.260) | ( 0, 0.000, 0.000) | ( 0, 0.000, 0.000) | ( 0, 0.000, 0.000) |
| 12 | 12 | 1 | 0.0658 | 0.3707 | 0.3707 | 0.7100 | ( 13, 0.214, 0.260) | ( 17, 0.214, 0.248) | ( 0, 0.000, 0.000) | ( 0, 0.000, 0.000) |
| 13 | 13 | 1 | 0.0658 | 0.3707 | 0.3707 | 0.7100 | ( 14, 0.214, 0.260) | ( 0, 0.000, 0.000) | ( 0, 0.000, 0.000) | ( 0, 0.000, 0.000) |
| 14 | 14 | 1 | 0.0658 | 0.3707 | 0.3707 | 0.7100 | ( 15, 0.214, 0.260) | ( 18, 0.214, 0.248) | ( 0, 0.000, 0.000) | ( 0, 0.000, 0.000) |
| 15 | 15 | 1 | 0.0658 | 0.3707 | 0.3707 | 0.7100 | ( 16, 0.214, 0.248) | ( 0, 0.000, 0.000) | ( 0, 0.000, 0.000) | ( 0, 0.000, 0.000) |
| 16 | 16 | 1 | 0.1605 | 1.0480 | 0.4325 | 0.6126 | ( 18, 0.057, 0.501) | ( 0, 0.000, 0.000) | ( 0, 0.000, 0.000) | ( 0, 0.000, 0.000) |
| 17 | 17 | 1 | 0.1605 | 1.0480 | 0.4325 | 0.6126 | ( 18, 0.178, 0.501) | ( 0, 0.000, 0.000) | ( 0, 0.000, 0.000) | ( 0, 0.000, 0.000) |
| 18 | 18 | 1 | 0.1605 | 1.0480 | 0.4325 | 0.6126 | ( 0, 0.000, 0.000) | ( 0, 0.000, 0.000) | ( 0, 0.000, 0.000) | ( 0, 0.000, 0.000) |

rod input data for assembly number 1

| local rod no. | global rod no. | type no. | diam (in) | radial power factor | fraction of power to adjacent channels (adj. channel no.) | | | | | |
|---|---|---|---|---|---|---|---|---|---|---|
| 1 | 1 | 1 | 0.0197 | 1.0500 | 0.3300 ( 1) | 0.1670 ( 2) | 0.0000 ( 0) | 0.0000 ( 0) | 0.0000 ( 0) | 0.0000 ( 0) |
| 2 | 2 | 1 | 0.0197 | 1.0250 | 0.1670 ( 2) | 0.1670 ( 3) | 0.1670 ( 4) | 0.0000 ( 0) | 0.0000 ( 0) | 0.0000 ( 0) |
| 3 | 3 | 1 | 0.0197 | 1.0000 | 0.1670 ( 4) | 0.1670 ( 5) | 0.1670 ( 6) | 0.0000 ( 0) | 0.0000 ( 0) | 0.0000 ( 0) |
| 4 | 4 | 1 | 0.0197 | 0.9750 | 0.1670 ( 6) | 0.1670 ( 7) | 0.1670 ( 8) | 0.0000 ( 0) | 0.0000 ( 0) | 0.0000 ( 0) |
| 5 | 5 | 1 | 0.0197 | 0.9500 | 0.1670 ( 8) | 0.3300 ( 9) | 0.0000 ( 0) | 0.0000 ( 0) | 0.0000 ( 0) | 0.0000 ( 0) |
| 6 | 6 | 1 | 0.0197 | 1.0300 | 0.2500 ( 1) | 0.1670 ( 2) | 0.1670 ( 3) | 0.2500 ( 10) | 0.1670 ( 11) | 0.0000 ( 0) |

| | | | | | | | | | | | |
|---|---|---|---|---|---|---|---|---|---|---|---|
| 7 | 7 | 1 | 0.0197 | 1.0130 | 0.1670 ( 3) | 0.1670 ( 4) | 0.1670 ( 5) | 0.1670 ( 11) | 0.1670 ( 12) | 0.1670 ( 13) |
| 8 | 8 | 1 | 0.0197 | 0.9870 | 0.1670 ( 5) | 0.1670 ( 6) | 0.1670 ( 7) | 0.1670 ( 13) | 0.1670 ( 14) | 0.1670 ( 15) |
| 9 | 9 | 1 | 0.0197 | 0.9620 | 0.1670 ( 7) | 0.1670 ( 8) | 0.2500 ( 9) | 0.1670 ( 15) | 0.2500 ( 16) | 0.0000 ( 0) |
| 10 | 10 | 1 | 0.0197 | 1.0250 | 0.3330 ( 10) | 0.1670 ( 11) | 0.1670 ( 12) | 0.3330 ( 17) | 0.0000 ( 0) | 0.0000 ( 0) |
| 11 | 11 | 1 | 0.0197 | 1.0000 | 0.1670 ( 12) | 0.1670 ( 13) | 0.1670 ( 14) | 0.2500 ( 17) | 0.2500 ( 18) | 0.0000 ( 0) |
| 12 | 12 | 1 | 0.0197 | 0.9750 | 0.1670 ( 14) | 0.1670 ( 15) | 0.3330 ( 16) | 0.3330 ( 18) | 0.0000 ( 0) | 0.0000 ( 0) |

assembly number 2 input description

---

axial heat flux profile number 1 heat transfer correlation number 2

heat flux vs. time profile number 0 inlet flow vs. time profile number 0

subchannel input data for assembly number 2

| loc. ch. no. | glb. ch. no. | frictn factor type | area (sq-in) | wetted perim. (in) | heated perim. (in) | hydraulic diameter (in) | (adjacent channel no., momentum control volume width and length) | | | |
|---|---|---|---|---|---|---|---|---|---|---|
| 1 | 19 | 2 | 0.2748 | 1.7200 | 0.0000 | 0.6391 | ( 2, 0.428, 0.819) | ( 0, 0.000, 0.000) | ( 0, 0.000, 0.000) | ( 0, 0.000, 0.000) |
| 2 | 20 | 2 | 0.2748 | 1.7200 | 0.0000 | 0.6391 | ( 3, 0.428, 0.819) | ( 0, 0.000, 0.000) | ( 0, 0.000, 0.000) | ( 0, 0.000, 0.000) |
| 3 | 21 | 2 | 0.2748 | 1.7200 | 0.0000 | 0.6391 | ( 4, 0.428, 0.819) | ( 0, 0.000, 0.000) | ( 0, 0.000, 0.000) | ( 0, 0.000, 0.000) |
| 4 | 22 | 2 | 0.2748 | 1.7200 | 0.0000 | 0.6391 | ( 5, 0.428, 0.819) | ( 0, 0.000, 0.000) | ( 0, 0.000, 0.000) | ( 0, 0.000, 0.000) |
| 5 | 23 | 2 | 0.2748 | 1.7200 | 0.0000 | 0.6391 | ( 6, 0.428, 0.819) | ( 0, 0.000, 0.000) | ( 0, 0.000, 0.000) | ( 0, 0.000, 0.000) |
| 6 | 24 | 2 | 0.2748 | 1.7200 | 0.0000 | 0.6391 | ( 0, 0.000, 0.000) | ( 0, 0.000, 0.000) | ( 0, 0.000, 0.000) | ( 0, 0.000, 0.000) |

rod input data for assembly number 2

| local rod no. | global rod no. | type no. | diam (in) | radial power factor | fraction of power to adjacent channels (adj. channel no.) |
|---|---|---|---|---|---|

thermal properties of fuel material 1 order of collocation

| | fuel properties | | | | clad properties | | | | | | | | | |
|---|---|---|---|---|---|---|---|---|---|---|---|---|---|---|
| type no. | cond. (b/hr-ft-f) | sp. heat (b/lb-f) | density (lb/ft3) | thick. (in.) | gap cond. (b/hr-ft-f) | col geom (b/lb-f) | sym (lb/ft3) | idtyp, (in.) | rod diam (b/hr-ft2-f) | (in.) | | | | |
| 1 | 1.00 | 1.0000 | 1.0 | 0.2360 | 1.00 | 1.0000 | 1.0 | 1.0000 | 1.00 | 1 | 1 | 1 | 1 | 0.2360 |

x/l area variation factors for (assembly,subchannel)

( 1, 10) ( 1, 9) ( 1, 8) ( 1, 7) ( 1, 6) ( 1, 5) ( 1, 4) ( 1, 3) ( 1, 2) ( 1, 1)

0 0.000

0 0.320

0 0.330
0 1.000
1

solid-to-fluid thermal connection type table

| connection type | slab-fluid resistance (ft-f-s/btu) | slab wetted perimeter (in) |
|---|---|---|
| 1 | 3.68 | 0.71 |
| 2 | 2.80 | 0.93 |
| 3 | 4.33 | 0.60 |

1

solid-to-solid thermal connection type table

| connection type | slab-slab resistance -series- (ft-f-s/btu) | slab-slab resistance -parallel- (ft-f-s/btu) | em1 | em2 | arad (in) |
|---|---|---|---|---|---|
| 1 | 1286.00 | 0.00 | 0.00 | 0.00 | 0.00 |
| 2 | 7.85 | ******* | 0.30 | 0.30 | 0.63 |
| 3 | 1445.00 | 0.00 | 0.00 | 0.00 | 0.00 |
| 4 | 1977.00 | 0.00 | 0.00 | 0.00 | 0.00 |
| 5 | 5.28 | 1600.00 | 0.30 | 0.30 | 0.98 |
| 6 | 2138.00 | 0.00 | 0.00 | 0.00 | 0.00 |
| 7 | 12.67 | 6.20 | 0.00 | 0.00 | 12.90 |
| 8 | 9538.00 | 0.00 | 0.00 | 0.00 | 0.00 |

1

slab thermal connections

| slab no. | mat. typ. | area (in2) | heat gen. (btu/cu.ft.-s) | power profile | solid connections (connected node,type) | fluid connections (adjacent assembly,channel,type) |
|---|---|---|---|---|---|---|
| 1 | 1 | 0.031 | 0.000 | 0 | ( 2, 1) ( 7, 2) ( 0, 0) ( 0, 0) | ( 1, 1, 3) ( 0, 0, 0) ( 0, 0, 0) |
| 2 | 1 | 0.031 | 0.000 | 0 | ( 3, 1) ( 8, 2) ( 1, 1) ( 0, 0) | ( 1, 10, 3) ( 0, 0, 0) ( 0, 0, 0) |

| | | | | | | | | | | | | | | | | | | | | | | | | | | |
|---|---|---|---|---|---|---|---|---|---|---|---|---|---|---|---|---|---|---|---|---|---|---|---|---|---|---|
| 3 | 1 | 0.031 | 0.000 | 0 | ( 4, | 1) | ( 9, | 2) | ( 2, | 1) | ( 0, | 0) | ( 1, | 17, | 3) | ( 0, | 0, | 0) | ( 0, | 0, | 0) |
| 4 | 1 | 0.031 | 0.000 | 0 | ( 5, | 1) | ( 10, | 2) | ( 3, | 1) | ( 0, | 0) | ( 1, | 18, | 3) | ( 0, | 0, | 0) | ( 0, | 0, | 0) |
| 5 | 1 | 0.031 | 0.000 | 0 | ( 6, | 1) | ( 11, | 2) | ( 4, | 1) | ( 0, | 0) | ( 1, | 16, | 3) | ( 0, | 0, | 0) | ( 0, | 0, | 0) |
| 6 | 1 | 0.031 | 0.000 | 0 | ( 12, | 2) | ( 5, | 1) | ( 0, | 0) | ( 0, | 0) | ( 1, | 9, | 3) | ( 0, | 0, | 0) | ( 0, | 0, | 0) |
| 7 | 1 | 0.035 | 0.000 | 0 | ( 8, | 3) | ( 1, | 2) | ( 0, | 0) | ( 0, | 0) | ( 2, | 1, | 1) | ( 0, | 0, | 0) | ( 0, | 0, | 0) |
| 8 | 1 | 0.035 | 0.000 | 0 | ( 9, | 3) | ( 2, | 2) | ( 7, | 3) | ( 0, | 0) | ( 2, | 2, | 1) | ( 0, | 0, | 0) | ( 0, | 0, | 0) |
| 9 | 1 | 0.035 | 0.000 | 0 | ( 10, | 3) | ( 3, | 2) | ( 8, | 3) | ( 0, | 0) | ( 2, | 3, | 1) | ( 0, | 0, | 0) | ( 0, | 0, | 0) |
| 10 | 1 | 0.035 | 0.000 | 0 | ( 11, | 3) | ( 4, | 2) | ( 9, | 3) | ( 0, | 0) | ( 2, | 4, | 1) | ( 0, | 0, | 0) | ( 0, | 0, | 0) |
| 11 | 1 | 0.035 | 0.000 | 0 | ( 12, | 3) | ( 5, | 2) | ( 10, | 3) | ( 0, | 0) | ( 2, | 5, | 1) | ( 0, | 0, | 0) | ( 0, | 0, | 0) |
| 12 | 1 | 0.035 | 0.000 | 0 | ( 6, | 2) | ( 11, | 3) | ( 0, | 0) | ( 0, | 0) | ( 2, | 6, | 1) | ( 0, | 0, | 0) | ( 0, | 0, | 0) |
| 13 | 1 | 0.047 | 0.000 | 0 | ( 14, | 4) | ( 19, | 5) | ( 0, | 0) | ( 0, | 0) | ( 2, | 1, | 2) | ( 0, | 0, | 0) | ( 0, | 0, | 0) |
| 14 | 1 | 0.047 | 0.000 | 0 | ( 15, | 4) | ( 20, | 5) | ( 13, | 4) | ( 0, | 0) | ( 2, | 2, | 2) | ( 0, | 0, | 0) | ( 0, | 0, | 0) |
| 15 | 1 | 0.047 | 0.000 | 0 | ( 16, | 4) | ( 21, | 5) | ( 14, | 4) | ( 0, | 0) | ( 2, | 3, | 2) | ( 0, | 0, | 0) | ( 0, | 0, | 0) |
| 16 | 1 | 0.047 | 0.000 | 0 | ( 17, | 4) | ( 22, | 5) | ( 15, | 4) | ( 0, | 0) | ( 2, | 4, | 2) | ( 0, | 0, | 0) | ( 0, | 0, | 0) |
| 17 | 1 | 0.047 | 0.000 | 0 | ( 18, | 4) | ( 23, | 5) | ( 16, | 4) | ( 0, | 0) | ( 2, | 5, | 2) | ( 0, | 0, | 0) | ( 0, | 0, | 0) |
| 18 | 1 | 0.047 | 0.000 | 0 | ( 24, | 5) | ( 17, | 4) | ( 0, | 0) | ( 0, | 0) | ( 2, | 6, | 2) | ( 0, | 0, | 0) | ( 0, | 0, | 0) |
| 19 | 1 | 0.051 | 0.000 | 0 | ( 20, | 6) | ( 25, | 7) | ( 13, | 5) | ( 0, | 0) | ( 0, | 0, | 0) | ( 0, | 0, | 0) | ( 0, | 0, | 0) |
| 20 | 1 | 0.051 | 0.000 | 0 | ( 21, | 6) | ( 26, | 7) | ( 14, | 5) | ( 19, | 6) | ( 0, | 0, | 0) | ( 0, | 0, | 0) | ( 0, | 0, | 0) |
| 21 | 1 | 0.051 | 0.000 | 0 | ( 22, | 6) | ( 27, | 7) | ( 15, | 5) | ( 20, | 6) | ( 0, | 0, | 0) | ( 0, | 0, | 0) | ( 0, | 0, | 0) |
| 22 | 1 | 0.051 | 0.000 | 0 | ( 23, | 6) | ( 28, | 7) | ( 16, | 5) | ( 21, | 6) | ( 0, | 0, | 0) | ( 0, | 0, | 0) | ( 0, | 0, | 0) |
| 23 | 1 | 0.051 | 0.000 | 0 | ( 24, | 6) | ( 29, | 7) | ( 17, | 5) | ( 22, | 6) | ( 0, | 0, | 0) | ( 0, | 0, | 0) | ( 0, | 0, | 0) |
| 24 | 1 | 0.051 | 0.000 | 0 | ( 30, | 7) | ( 18, | 5) | ( 23, | 6) | ( 0, | 0) | ( 0, | 0, | 0) | ( 0, | 0, | 0) | ( 0, | 0, | 0) |
| 25 | 2 | 0.054 | 0.000 | 0 | ( 26, | 8) | ( 19, | 7) | ( 0, | 0) | ( 0, | 0) | ( 0, | 0, | 0) | ( 0, | 0, | 0) | ( 0, | 0, | 0) |
| 26 | 2 | 0.054 | 0.000 | 0 | ( 27, | 8) | ( 20, | 7) | ( 25, | 8) | ( 0, | 0) | ( 0, | 0, | 0) | ( 0, | 0, | 0) | ( 0, | 0, | 0) |
| 27 | 2 | 0.054 | 0.000 | 0 | ( 28, | 8) | ( 21, | 7) | ( 26, | 8) | ( 0, | 0) | ( 0, | 0, | 0) | ( 0, | 0, | 0) | ( 0, | 0, | 0) |
| 28 | 2 | 0.054 | 0.000 | 0 | ( 29, | 8) | ( 22, | 7) | ( 27, | 8) | ( 0, | 0) | ( 0, | 0, | 0) | ( 0, | 0, | 0) | ( 0, | 0, | 0) |
| 29 | 2 | 0.054 | 0.000 | 0 | ( 30, | 8) | ( 23, | 7) | ( 28, | 8) | ( 0, | 0) | ( 0, | 0, | 0) | ( 0, | 0, | 0) | ( 0, | 0, | 0) |
| 30 | 2 | 0.054 | 0.000 | 0 | ( 24, | 7) | ( 29, | 8) | ( 0, | 0) | ( 0, | 0) | ( 0, | 0, | 0) | ( 0, | 0, | 0) | ( 0, | 0, | 0) |

boundary thermal input data

---

boundary thermal connection type table

| type | conduction/convection component (btu/s) | radiation component (btu/s) |
|---|---|---|
| 1 | q = 1.15200e+00 *(dt** 1.000) | q = sigma * 0.000 * (ts**4 - tamb**4) |

boundary temperature type table 1

| x/l | tamb |
|---|---|
| 0.000 | 680.0 |
| 0.250 | 710.0 |

| | |
|---|---|
| 0.500 | 740.0 |
| 0.750 | 770.0 |
| 1.000 | 800.0 |

boundary node data

| boundary node | heated perim | heat flux (b/hr-ft2) | boundary temp. type | boundary region no. | interface area multiplier | axial zone end elevation (x/l),boundary thermal, connection type) |
|---|---|---|---|---|---|---|
| 25 | 1.10 | 0.000 | 1 | 1 | 1.104 | (1.000, 1) (0.000, 0) (0.000, 0) (0.000, 0) (0.000, 0) (0.000, 0) |
| 26 | 1.10 | 0.000 | 1 | 1 | 1.104 | (1.000, 1) (0.000, 0) (0.000, 0) (0.000, 0) (0.000, 0) (0.000, 0) |
| 27 | 1.10 | 0.000 | 1 | 1 | 1.104 | (1.000, 1) (0.000, 0) (0.000, 0) (0.000, 0) (0.000, 0) (0.000, 0) |
| 28 | 1.10 | 0.000 | 1 | 1 | 1.104 | (1.000, 1) (0.000, 0) (0.000, 0) (0.000, 0) (0.000, 0) (0.000, 0) |
| 29 | 1.10 | 0.000 | 1 | 1 | 1.104 | (1.000, 1) (0.000, 0) (0.000, 0) (0.000, 0) (0.000, 0) (0.000, 0) |
| 30 | 1.10 | 0.000 | 1 | 1 | 1.104 | (1.000, 1) (0.000, 0) (0.000, 0) (0.000, 0) (0.000, 0) (0.000, 0) |

calculation parameters

| | |
|---|---|
| lateral resistance factor | 0.5000 |
| s/l parameter | 0.5000 |
| turbulent momentum factor | 0.0000 |
| channel orientation (degrees) | 0.0000 |
| channel length (inches) | 124.2000 |
| number of axial nodes | 18 |
| total transient time (seconds) | 0.0000 |
| number of time steps | 0 |
| nominal time step (seconds) | ********* |
| roll option (0 - no roll) | 0 |

data for implicit solution

| | |
|---|---|
| external iteration limit | 30 |
| convergence factors | |
| internal (dp/p) | 0.00100 |
| energy (dh/h) | 0.00100 |
| acceleration factors | |
| crossflow solution | 1.60000 |
| lateral delta-p | 0.80000 |
| flow | 0.70000 |
| density | 1.00000 |
| slab energy | 1.20000 |

axial noding

| node no. | integral height (in.) | nodal length (in.) | node no. | integral height (in.) | nodal length (in.) | node no. | integral height (in.) | nodal length (in.) |
|---|---|---|---|---|---|---|---|---|
| 1 | 0.0- 2.1 | 2.100 | 2 | 2.1- 4.2 | 2.100 | 3 | 4.2- 8.7 | 4.500 |
| 4 | 8.7- 13.2 | 4.500 | 5 | 13.2- 17.7 | 4.500 | 6 | 17.7- 22.2 | 4.500 |
| 7 | 22.2- 26.7 | 4.500 | 8 | 26.7- 31.2 | 4.500 | 9 | 31.2- 35.7 | 4.500 |
| 10 | 35.7- 40.2 | 4.500 | 11 | 40.2- 48.2 | 8.000 | 12 | 48.2- 56.2 | 8.000 |
| 13 | 56.2- 64.2 | 8.000 | 14 | 64.2- 76.2 | 12.000 | 15 | 76.2- 88.2 | 12.000 |
| 16 | 88.2- 100.2 | 12.000 | 17 | 100.2- 112.2 | 12.000 | 18 | 112.2- 124.2 | 12.000 |

0mixing parameters

| assembly type no. | mixing correlation | mixing coefficients abeta | bbeta | conduction mixing geometry factor |
|---|---|---|---|---|
| 1 | 0 | 0.000 | 0.000 | 1.000 |
| 2 | 0 | 0.000 | 0.000 | 1.000 |

operating conditions

system pressure = 0.0 psia

inlet enthalpy = 1496.6 btu/lbm

inlet temperature =1500.000 degrees f

nominal mass flux = 0.100 million lbm/ft2-hr

nominal power density = 39.3000 million btu/hr-ft3

exit enthalpy = 1680.0 btu/lbm

uniform inlet temperature

specified total flow = 0.000 lbm/sec, equal pressure drop along each flow path

1

parameter summary

| parameter | description | dimensioned for | amount used |
|---|---|---|---|
| id | max. no. of solid material property types | 6 | 5 |
| if | max. no. of boundary thermal connection types | 15 | 1 |
| lip | max. no. of radial boundary regions | 8 | 2 |
| iq | max. no. of circumferential boundary nodes | 7 | 6 |
| lit | max. no. of assembly types | 3 | 2 |
| iu | max. no. of assemblies | 6 | 2 |

| | | | |
|---|---|---|---|
| iw | max. no. of loss coeff. profiles, friction factor or heat transfer corr. | 6 | 2 |
| iz | max. no. of slab-slab and slab-fluid connection types | 15 | 8 |
| ma | max. no. of channels with area variations | 20 | 18 |
| mc | max. no. of channels | 30 | 24 |
| me | mx if not using roll option; 3 if roll is used | 40 | 19 |
| mg | max. no. of channel gap connections | 55 | 29 |
| mh | max. no. of slab-slab solid connections | 11 | 2 |
| mj | max. no. of assembly groupings in network model | 1 | 0 |
| mk | max. no. of loss coefficients | 3 | 0 |
| ml | max. no. of axial locations for gap and area variations | 9 | 4 |
| lmm | max. no. of points in selected profile tables | 29 | 0 |
| mn | max. no. of fuel nodes in a rod | 6 | 2 |
| mp | max. no. of entries in property, axial heat flux or transient tables | 31 | 2 |
| mq | max. no. of channel groups that have local axial losses | 40 | 0 |
| mr | max. no. of fuel rods | 50 | 12 |
| ms | max. no. of gaps that can have gap spacing variations | 30 | 24 |
| mt | max. no. of fuel types | 10 | 1 |
| mv | max. no. of axial heat flux profiles | 6 | 1 |
| mw | max. no. of slab nodes | 60 | 30 |
| mx | max. no. of axial nodes plus one | 40 | 19 |
| my | max. no. of axial fuel type divisions | 4 | 0 |
| nd | max. no. of fluid channels connected to a wall node | 9 | 1 |
| no | max. no. of boundary temperature types | 1 | 1 |
| nv | max. no. of user-defined radiation groups | 2 | 0 |
| lnz | max. no. of surfaces in a user-defined radiation group | 10 | 0 |
| la | no. of radiation surfaces in enclosure type 1 | 15 | 0 |
| lb | no. of radiation surfaces in enclosure type 2 | 1 | 0 |
| llc | no. of radiation surfaces in enclosure type 3 | 1 | 0 |
| ld | no. of radiation surfaces in enclosure type 4 | 1 | 0 |
| le | no. of radiation surfaces in enclosure type 5 | 1 | 0 |
| lf | no. of radiation surfaces in enclosure type 6 | 1 | 0 |

total heat generation in the problem is 47.27583 btu/sec or 49.86607 kw

data from iterative solution using the recirculation module

time = 0.0000 dt = ****** implicit dt = 0.0000 explicit dt = 0.3923 mode = 0

| iteration no. | sweep no. | peak clad temp(f) | peak clad fluid | peak clad rod | peak clad ass. | total flow (lbm/s) | pressure drop(psi) | error total energy | error flow | error fluid energy | error rod energy |
|---|---|---|---|---|---|---|---|---|---|---|---|
| 1 | 1 | 1662.8 | 8 | 3 | 1 | -0.382e-05 | 1.3641323 | -0.8164 | 1.4563 | 0.0138 | 0.0000 |
| | 2 | 1687.3 | 7 | 3 | 1 | | | 0.0773 | 1.4563 | 0.0677 | 0.0000 |
| 2 | 1 | 1766.2 | 7 | 3 | 1 | -0.126e-02 | 1.5150148 | 0.2181 | 1.3742 | 0.0668 | 0.0000 |
| | 2 | 1745.9 | 7 | 3 | 1 | | | 0.2443 | 1.3742 | 0.0630 | 0.0000 |
| 3 | 1 | 1715.4 | 8 | 3 | 1 | 0.991e-02 | 1.4721449 | -0.0683 | 14.4047 | 0.0589 | 0.0000 |
| | 2 | 1661.2 | 7 | 3 | 1 | | | -0.1702 | 14.4047 | 0.0046 | 0.0000 |
| 4 | 1 | 1662.1 | 7 | 3 | 1 | 0.287e-02 | 1.4771752 | -0.0081 | 0.1107 | 0.0610 | 0.0000 |
| | 2 | 1643.2 | 7 | 3 | 1 | | | -0.1239 | 0.1107 | 0.0352 | 0.0000 |
| 5 | 1 | 1644.8 | 7 | 3 | 1 | -0.642e-03 | 1.4821841 | -0.0978 | 0.1174 | 0.0033 | 0.0000 |
| | 2 | 1633.6 | 7 | 3 | 1 | | | -0.0937 | 0.1174 | 0.0027 | 0.0000 |
| 6 | 1 | 1634.8 | 7 | 3 | 1 | -0.170e-02 | 1.4874870 | -0.0756 | 0.1143 | 0.0026 | 0.0000 |
| | 2 | 1626.2 | 7 | 3 | 1 | | | -0.0702 | 0.1143 | 0.0022 | 0.0000 |
| 7 | 1 | 1627.1 | 7 | 3 | 1 | -0.154e-02 | 1.4912637 | 0.0115 | 0.0993 | 0.0018 | 0.0000 |
| | 2 | 1620.5 | 7 | 3 | 1 | | | -0.0535 | 0.0993 | 0.0020 | 0.0000 |
| 8 | 1 | 1621.2 | 7 | 3 | 1 | -0.105e-02 | 1.4939894 | -0.0454 | 0.0841 | 0.0017 | 0.0000 |
| | 2 | 1616.0 | 7 | 3 | 1 | | | -0.0423 | 0.0841 | 0.0015 | 0.0000 |
| 9 | 1 | 1616.6 | 7 | 3 | 1 | -0.610e-03 | 1.4961024 | -0.0355 | 0.0713 | 0.0014 | 0.0000 |
| | 2 | 1612.4 | 7 | 3 | 1 | | | -0.0330 | 0.0713 | 0.0012 | 0.0000 |
| 10 | 1 | 1613.0 | 7 | 3 | 1 | -0.319e-03 | 1.4977757 | -0.0008 | 0.0604 | 0.0010 | 0.0000 |
| | 2 | 1609.6 | 7 | 3 | 1 | | | -0.0250 | 0.0604 | 0.0012 | 0.0000 |
| 11 | 1 | 1610.1 | 7 | 3 | 1 | -0.151e-03 | 1.4991002 | -0.0205 | 0.0505 | 0.0010 | 0.0000 |

| | | | | | | | | | | | |
|---|---|---|---|---|---|---|---|---|---|---|---|
| | 2 | 1607.5 | 7 | 3 | 1 | | | -0.0188 | 0.0505 | 0.0008 | 0.0000 |
| 12 | 1 | 1607.9 | 7 | 3 | 1 | -0.508e-04 | 1.5001367 | -0.0150 | 0.0415 | 0.0008 | 0.0000 |
| | 2 | 1605.9 | 7 | 3 | 1 | | | -0.0137 | 0.0415 | 0.0007 | 0.0000 |
| 13 | 1 | 1606.3 | 7 | 3 | 1 | 0.119e-04 | 1.5009183 | -0.0038 | 0.0337 | 0.0006 | 0.0000 |
| | 2 | 1604.8 | 7 | 3 | 1 | | | -0.0097 | 0.0337 | 0.0007 | 0.0000 |
| 14 | 1 | 1605.2 | 7 | 3 | 1 | 0.472e-04 | 1.5015125 | -0.0074 | 0.0270 | 0.0005 | 0.0000 |
| | 2 | 1604.1 | 7 | 3 | 1 | | | -0.0066 | 0.0270 | 0.0004 | 0.0000 |
| 15 | 1 | 1604.4 | 7 | 3 | 1 | 0.628e-04 | 1.5019328 | -0.0048 | 0.0212 | 0.0004 | 0.0000 |
| | 2 | 1603.6 | 7 | 3 | 1 | | | -0.0042 | 0.0212 | 0.0003 | 0.0000 |
| 16 | 1 | 1603.9 | 7 | 3 | 1 | 0.592e-04 | 1.5022111 | -0.0061 | 0.0165 | 0.0003 | 0.0000 |
| | 2 | 1603.4 | 7 | 3 | 1 | | | -0.0025 | 0.0165 | 0.0003 | 0.0000 |
| 17 | 1 | 1603.6 | 7 | 3 | 1 | 0.429e-04 | 1.5023828 | -0.0015 | 0.0128 | 0.0002 | 0.0000 |
| | 2 | 1603.3 | 7 | 3 | 1 | | | -0.0013 | 0.0128 | 0.0002 | 0.0000 |
| 18 | 1 | 1603.5 | 7 | 3 | 1 | 0.139e-04 | 1.5024779 | -0.0006 | 0.0099 | 0.0002 | 0.0000 |
| | 2 | 1603.4 | 7 | 3 | 1 | | | -0.0004 | 0.0099 | 0.0001 | 0.0000 |
| 19 | 1 | 1603.5 | 7 | 3 | 1 | -0.268e-04 | 1.5025220 | -0.0073 | 0.0078 | 0.0002 | 0.0000 |
| | 2 | 1603.5 | 7 | 3 | 1 | | | 0.0002 | 0.0078 | 0.0002 | 0.0000 |
| 20 | 1 | 1603.6 | 7 | 3 | 1 | -0.743e-04 | 1.5025618 | 0.0007 | 0.0062 | 0.0001 | 0.0000 |
| | 2 | 1603.6 | 7 | 3 | 1 | | | 0.0008 | 0.0062 | 0.0001 | 0.0000 |

cobra-sfs code results
case 1 EXAMPLE PROBLEM 2 FOR COBRA-SFS date 86/11/25 time 15:37:03

calculated fluid conditions at time = 0.0000 seconds pressure = 0.0 psia

channel 1
assembly 1

| distance (in.) | delta-p (psi) | enthalpy (btu/lb) | temperature (deg-f) | density (lb/cu-ft) | flow (lb/sec) | mass flux (mlb/hr-ft2) | velocity (ft/sec) | area (sq-in) |
|---|---|---|---|---|---|---|---|---|
| 0.0 | 1.5025628 | 1415.97 | 1419.15 | 21.5441 | 0.0306484 | 0.0989915 | 1.2763427 | 0.16050 |
| 2.1 | 1.4686082 | 1415.97 | 1419.15 | 21.5441 | 0.0306484 | 0.0989916 | 1.2763426 | 0.16050 |
| 4.2 | 1.4422945 | 1415.98 | 1419.16 | 21.5440 | 0.0307234 | 0.0992336 | 1.2794685 | 0.16050 |
| 8.7 | 1.3865054 | 1446.17 | 1449.42 | 21.3452 | 0.0303231 | 0.0979407 | 1.2745588 | 0.16050 |
| 13.2 | 1.3312891 | 1478.96 | 1482.28 | 21.1335 | 0.0298404 | 0.0963818 | 1.2668387 | 0.16050 |
| 17.7 | 1.2766501 | 1513.01 | 1516.40 | 20.9180 | 0.0293686 | 0.0948579 | 1.2596532 | 0.16050 |
| 22.2 | 1.2226005 | 1547.57 | 1551.04 | 20.7037 | 0.0289191 | 0.0934060 | 1.2532115 | 0.16050 |
| 26.7 | 1.1685785 | 1551.53 | 1555.01 | 20.6794 | 0.0287062 | 0.0927184 | 1.2454468 | 0.16050 |
| 31.2 | 1.1145577 | 1553.33 | 1556.81 | 20.6684 | 0.0286191 | 0.0924369 | 1.2423256 | 0.16050 |
| 35.7 | 1.0606811 | 1554.02 | 1557.50 | 20.6642 | 0.0284188 | 0.0917902 | 1.2338851 | 0.16050 |
| 40.2 | 1.0071504 | 1554.15 | 1557.64 | 20.6634 | 0.0279296 | 0.0852344 | 1.1458055 | 0.16987 |
| 48.2 | 0.9116492 | 1553.76 | 1557.24 | 20.6658 | 0.0272372 | 0.0759048 | 1.0202699 | 0.18602 |
| 56.2 | 0.8158672 | 1553.18 | 1556.66 | 20.6694 | 0.0269247 | 0.0750338 | 1.0083878 | 0.18602 |
| 64.2 | 0.7199271 | 1552.58 | 1556.05 | 20.6730 | 0.0268624 | 0.0748603 | 1.0058779 | 0.18602 |
| 76.2 | 0.5759753 | 1551.75 | 1555.23 | 20.6781 | 0.0266973 | 0.0744002 | 0.9994502 | 0.18602 |
| 88.2 | 0.4320009 | 1551.10 | 1554.57 | 20.6821 | 0.0265137 | 0.0738886 | 0.9923867 | 0.18602 |
| 100.2 | 0.2880096 | 1550.62 | 1554.09 | 20.6850 | 0.0263241 | 0.0733602 | 0.9851497 | 0.18602 |
| 112.2 | 0.1440070 | 1550.31 | 1553.79 | 20.6869 | 0.0261382 | 0.0728420 | 0.9781022 | 0.18602 |
| 124.2 | 0.0000000 | 1550.17 | 1553.65 | 20.6877 | 0.0259581 | 0.0723403 | 0.9713249 | 0.18602 |

calculated fluid conditions at time = 0.0000 seconds pressure = 0.0 psia
channel 2
assembly 1

| distance (in.) | delta-p (psi) | enthalpy (btu/lb) | temperature (deg-f) | density (lb/cu-ft) | flow (lb/sec) | mass flux (mlb/hr-ft2) | velocity (ft/sec) | area (sq-in) |
|---|---|---|---|---|---|---|---|---|
| 0.0 | 1.5025628 | 1415.97 | 1419.15 | 21.5441 | 0.0125853 | 0.0991522 | 1.2784143 | 0.06580 |
| 2.1 | 1.4686091 | 1415.97 | 1419.15 | 21.5441 | 0.0125853 | 0.0991522 | 1.2784135 | 0.06580 |
| 4.2 | 1.4422931 | 1415.97 | 1419.15 | 21.5441 | 0.0125491 | 0.0988669 | 1.2747366 | 0.06580 |
| 8.7 | 1.3865051 | 1457.47 | 1460.75 | 21.2718 | 0.0127547 | 0.1004871 | 1.3122130 | 0.06580 |
| 13.2 | 1.3312891 | 1494.86 | 1498.22 | 21.0323 | 0.0130094 | 0.1024936 | 1.3536538 | 0.06580 |
| 17.7 | 1.2766501 | 1530.57 | 1534.00 | 20.8085 | 0.0132756 | 0.1045904 | 1.3962006 | 0.06580 |

| | | | | | | | | |
|---|---|---|---|---|---|---|---|---|
| 22.2 | 1.2226011 | 1565.45 | 1568.95 | 20.5948 | 0.0135515 | 0.1067646 | 1.4400309 | 0.06580 |
| 26.7 | 1.1685789 | 1560.25 | 1563.75 | 20.6262 | 0.0137157 | 0.1080583 | 1.4552484 | 0.06580 |
| 31.2 | 1.1145574 | 1557.99 | 1561.48 | 20.6399 | 0.0138171 | 0.1088571 | 1.4650280 | 0.06580 |
| 35.7 | 1.0606807 | 1556.72 | 1560.21 | 20.6477 | 0.0140719 | 0.1108644 | 1.4914811 | 0.06580 |
| 40.2 | 1.0071505 | 1555.84 | 1559.33 | 20.6531 | 0.0146471 | 0.1028245 | 1.3829607 | 0.07384 |
| 48.2 | 0.9116494 | 1554.74 | 1558.23 | 20.6598 | 0.0155787 | 0.0920746 | 1.2379739 | 0.08771 |
| 56.2 | 0.8158673 | 1553.87 | 1557.35 | 20.6651 | 0.0160491 | 0.0948547 | 1.2750249 | 0.08771 |
| 64.2 | 0.7199271 | 1553.13 | 1556.61 | 20.6696 | 0.0161745 | 0.0955959 | 1.2847077 | 0.08771 |
| 76.2 | 0.5759753 | 1552.21 | 1555.69 | 20.6753 | 0.0163541 | 0.0966574 | 1.2986184 | 0.08771 |
| 88.2 | 0.4320009 | 1551.48 | 1554.95 | 20.6798 | 0.0164984 | 0.0975105 | 1.3097962 | 0.08771 |
| 100.2 | 0.2880096 | 1550.92 | 1554.39 | 20.6832 | 0.0166122 | 0.0981829 | 1.3186091 | 0.08771 |
| 112.2 | 0.1440070 | 1550.53 | 1554.00 | 20.6856 | 0.0167020 | 0.0987139 | 1.3255865 | 0.08771 |
| 124.2 | 0.0000000 | 1550.30 | 1553.77 | 20.6870 | 0.0168082 | 0.0993412 | 1.3339207 | 0.08771 |

calculated fluid conditions at time = 0.0000 seconds pressure = 0.0 psia

channel 3

assembly 1

| distance (in.) | delta-p (psi) | enthalpy (btu/lb) | temperature (deg-f) | density (lb/cu-ft) | flow (lb/sec) | mass flux (mlb/hr-ft2) | velocity (ft/sec) | area (sq-in) |
|---|---|---|---|---|---|---|---|---|
| 0.0 | 1.5025628 | 1415.97 | 1419.15 | 21.5441 | 0.0125837 | 0.0991399 | 1.2782559 | 0.06580 |
| 2.1 | 1.4686096 | 1415.97 | 1419.15 | 21.5441 | 0.0125837 | 0.0991398 | 1.2782546 | 0.06580 |
| 4.2 | 1.4422923 | 1415.97 | 1419.15 | 21.5441 | 0.0125254 | 0.0986801 | 1.2723273 | 0.06580 |
| 8.7 | 1.3865050 | 1460.03 | 1463.31 | 21.2552 | 0.0127994 | 0.1008389 | 1.3178310 | 0.06580 |
| 13.2 | 1.3312891 | 1499.36 | 1502.72 | 21.0039 | 0.0131767 | 0.1038118 | 1.3729191 | 0.06580 |
| 17.7 | 1.2766501 | 1536.02 | 1539.47 | 20.7748 | 0.0135885 | 0.1070562 | 1.4314368 | 0.06580 |
| 22.2 | 1.2226015 | 1571.17 | 1574.68 | 20.5599 | 0.0140086 | 0.1103655 | 1.4911088 | 0.06580 |
| 26.7 | 1.1685791 | 1564.44 | 1567.94 | 20.6007 | 0.0142699 | 0.1124239 | 1.5159124 | 0.06580 |
| 31.2 | 1.1145575 | 1560.64 | 1564.13 | 20.6238 | 0.0144388 | 0.1137552 | 1.5321440 | 0.06580 |
| 35.7 | 1.0606807 | 1558.33 | 1561.82 | 20.6379 | 0.0148138 | 0.1167097 | 1.5708668 | 0.06580 |
| 40.2 | 1.0071505 | 1556.84 | 1560.33 | 20.6470 | 0.0155662 | 0.1092765 | 1.4701706 | 0.07384 |
| 48.2 | 0.9116494 | 1555.23 | 1558.71 | 20.6568 | 0.0167929 | 0.0992508 | 1.3346522 | 0.08771 |
| 56.2 | 0.8158673 | 1554.13 | 1557.61 | 20.6635 | 0.0173631 | 0.1026207 | 1.3795207 | 0.08771 |
| 64.2 | 0.7199271 | 1553.30 | 1556.78 | 20.6686 | 0.0174803 | 0.1033138 | 1.3884972 | 0.08771 |
| 76.2 | 0.5759752 | 1552.34 | 1555.82 | 20.6745 | 0.0176490 | 0.1043110 | 1.4015011 | 0.08771 |
| 88.2 | 0.4320009 | 1551.59 | 1555.07 | 20.6791 | 0.0177836 | 0.1051063 | 1.4118717 | 0.08771 |
| 100.2 | 0.2880096 | 1551.01 | 1554.49 | 20.6826 | 0.0178902 | 0.1057366 | 1.4200956 | 0.08771 |

| | | | | | | | | |
|---|---|---|---|---|---|---|---|---|
| 112.2 | 0.1440070 | 1550.60 | 1554.07 | 20.6852 | 0.0179751 | 0.1062380 | 1.4266543 | 0.08771 |
| 124.2 | 0.0000000 | 1550.34 | 1553.81 | 20.6867 | 0.0180537 | 0.1067027 | 1.4327851 | 0.08771 |

calculated fluid conditions at time = 0.0000 seconds pressure = 0.0 psia
channel 4
assembly 1

| distance (in.) | delta-p (psi) | enthalpy (btu/lb) | temperature (deg-f) | density (lb/cu-ft) | flow (lb/sec) | mass flux (mlb/hr-ft2) | velocity (ft/sec) | area (sq-in) |
|---|---|---|---|---|---|---|---|---|
| 0.0 | 1.5025628 | 1415.97 | 1419.15 | 21.5441 | 0.0125821 | 0.0991274 | 1.2780942 | 0.06580 |
| 2.1 | 1.4686101 | 1415.97 | 1419.15 | 21.5441 | 0.0125821 | 0.0991273 | 1.2780924 | 0.06580 |
| 4.2 | 1.4422914 | 1415.97 | 1419.15 | 21.5441 | 0.0125075 | 0.0985394 | 1.2705130 | 0.06580 |
| 8.7 | 1.3865047 | 1462.16 | 1465.44 | 21.2415 | 0.0128313 | 0.1010901 | 1.3219709 | 0.06580 |
| 13.2 | 1.3312890 | 1503.46 | 1506.83 | 20.9780 | 0.0133068 | 0.1048368 | 1.3881875 | 0.06580 |
| 17.7 | 1.2766502 | 1541.28 | 1544.73 | 20.7424 | 0.0138393 | 0.1090317 | 1.4601291 | 0.06580 |
| 22.2 | 1.2226019 | 1576.85 | 1580.38 | 20.5256 | 0.0143828 | 0.1133134 | 1.5334973 | 0.06580 |
| 26.7 | 1.1685793 | 1569.13 | 1572.65 | 20.5722 | 0.0147430 | 0.1161512 | 1.5683391 | 0.06580 |
| 31.2 | 1.1145583 | 1563.92 | 1567.42 | 20.6039 | 0.0149752 | 0.1179812 | 1.5906027 | 0.06580 |
| 35.7 | 1.0606815 | 1560.45 | 1563.95 | 20.6249 | 0.0149578 | 0.1178440 | 1.5871281 | 0.06580 |
| 40.2 | 1.0071505 | 1558.15 | 1561.64 | 20.6390 | 0.0146059 | 0.1144414 | 1.5402526 | 0.06616 |
| 48.2 | 0.9116492 | 1555.83 | 1559.31 | 20.6532 | 0.0140230 | 0.1088463 | 1.4639443 | 0.06679 |
| 56.2 | 0.8158672 | 1554.40 | 1557.88 | 20.6619 | 0.0137230 | 0.1065181 | 1.4320264 | 0.06679 |
| 64.2 | 0.7199271 | 1553.44 | 1556.92 | 20.6678 | 0.0136212 | 0.1057273 | 1.4209897 | 0.06679 |
| 76.2 | 0.5759752 | 1552.43 | 1555.91 | 20.6739 | 0.0134014 | 0.1040213 | 1.3976438 | 0.06679 |
| 88.2 | 0.4320009 | 1551.66 | 1555.14 | 20.6786 | 0.0131765 | 0.1022761 | 1.3738837 | 0.06679 |
| 100.2 | 0.2880096 | 1551.07 | 1554.55 | 20.6822 | 0.0129493 | 0.1005127 | 1.3499590 | 0.06679 |
| 112.2 | 0.1440070 | 1550.64 | 1554.11 | 20.6849 | 0.0127214 | 0.0987435 | 1.3260288 | 0.06679 |
| 124.2 | 0.0000000 | 1550.36 | 1553.83 | 20.6866 | 0.0124923 | 0.0969647 | 1.3020340 | 0.06679 |

calculated fluid conditions at time = 0.0000 seconds pressure = 0.0 psia
channel 5
assembly 1

| distance (in.) | delta-p (psi) | enthalpy (btu/lb) | temperature (deg-f) | density (lb/cu-ft) | flow (lb/sec) | mass flux (mlb/hr-ft2) | velocity (ft/sec) | area (sq-in) |
|---|---|---|---|---|---|---|---|---|

| | | | | | | | | |
|---|---|---|---|---|---|---|---|---|
| 0.0 | 1.5025628 | 1415.97 | 1419.15 | 21.5441 | 0.0125827 | 0.0991315 | 1.2781473 | 0.06580 |
| 2.1 | 1.4686099 | 1415.97 | 1419.15 | 21.5441 | 0.0125826 | 0.0991314 | 1.2781457 | 0.06580 |
| 4.2 | 1.4422918 | 1415.97 | 1419.15 | 21.5441 | 0.0125116 | 0.0985713 | 1.2709252 | 0.06580 |
| 8.7 | 1.3865049 | 1461.64 | 1464.93 | 21.2448 | 0.0128228 | 0.1010235 | 1.3208926 | 0.06580 |
| 13.2 | 1.3312892 | 1502.57 | 1505.94 | 20.9836 | 0.0132757 | 0.1045918 | 1.3845703 | 0.06580 |
| 17.7 | 1.2766503 | 1540.12 | 1543.57 | 20.7495 | 0.0137790 | 0.1085563 | 1.4532656 | 0.06580 |
| 22.2 | 1.2226018 | 1575.54 | 1579.06 | 20.5335 | 0.0142901 | 0.1125832 | 1.5230290 | 0.06580 |
| 26.7 | 1.1685792 | 1568.05 | 1571.56 | 20.5788 | 0.0146229 | 0.1152057 | 1.5550740 | 0.06580 |
| 31.2 | 1.1145583 | 1563.02 | 1566.52 | 20.6093 | 0.0148353 | 0.1168784 | 1.5753180 | 0.06580 |
| 35.7 | 1.0606816 | 1559.72 | 1563.22 | 20.6294 | 0.0148037 | 0.1166300 | 1.5704395 | 0.06580 |
| 40.2 | 1.0071505 | 1557.56 | 1561.05 | 20.6426 | 0.0144395 | 0.1131373 | 1.5224368 | 0.06616 |
| 48.2 | 0.9116490 | 1555.39 | 1558.88 | 20.6558 | 0.0138367 | 0.1074005 | 1.4443137 | 0.06679 |
| 56.2 | 0.8158670 | 1554.06 | 1557.54 | 20.6639 | 0.0135247 | 0.1049789 | 1.4111925 | 0.06679 |
| 64.2 | 0.7199271 | 1553.17 | 1556.65 | 20.6694 | 0.0134175 | 0.1041463 | 1.3996321 | 0.06679 |
| 76.2 | 0.5759752 | 1552.24 | 1555.72 | 20.6751 | 0.0131946 | 0.1024160 | 1.3759995 | 0.06679 |
| 88.2 | 0.4320009 | 1551.53 | 1555.01 | 20.6794 | 0.0129705 | 0.1006772 | 1.3523536 | 0.06679 |
| 100.2 | 0.2880096 | 1550.98 | 1554.45 | 20.6828 | 0.0127471 | 0.0989432 | 1.3288439 | 0.06679 |
| 112.2 | 0.1440070 | 1550.58 | 1554.05 | 20.6853 | 0.0125248 | 0.0972173 | 1.3055087 | 0.06679 |
| 124.2 | 0.0000000 | 1550.32 | 1553.79 | 20.6869 | 0.0123020 | 0.0954882 | 1.2821901 | 0.06679 |

calculated fluid conditions at time = 0.0000 seconds pressure = 0.0 psia
channel 6
assembly 1

| distance (in.) | delta-p (psi) | enthalpy (btu/lb) | temperature (deg-f) | density (lb/cu-ft) | flow (lb/sec) | mass flux (mlb/hr-ft2) | velocity (ft/sec) | area (sq-in) |
|---|---|---|---|---|---|---|---|---|
| 0.0 | 1.5025628 | 1415.97 | 1419.15 | 21.5441 | 0.0125831 | 0.0991351 | 1.2781942 | 0.06580 |
| 2.1 | 1.4686096 | 1415.97 | 1419.15 | 21.5441 | 0.0125831 | 0.0991350 | 1.2781927 | 0.06580 |
| 4.2 | 1.4422921 | 1415.97 | 1419.15 | 21.5441 | 0.0125156 | 0.0986029 | 1.2713320 | 0.06580 |
| 8.7 | 1.3865052 | 1461.12 | 1464.40 | 21.2482 | 0.0128145 | 0.1009580 | 1.3198276 | 0.06580 |
| 13.2 | 1.3312893 | 1501.66 | 1505.03 | 20.9893 | 0.0132451 | 0.1043504 | 1.3809994 | 0.06580 |
| 17.7 | 1.2766504 | 1538.95 | 1542.40 | 20.7567 | 0.0137191 | 0.1080849 | 1.4464516 | 0.06580 |
| 22.2 | 1.2226017 | 1574.21 | 1577.73 | 20.5415 | 0.0141976 | 0.1118546 | 1.5125817 | 0.06580 |
| 26.7 | 1.1685791 | 1566.94 | 1570.45 | 20.5855 | 0.0145030 | 0.1142606 | 1.5418150 | 0.06580 |
| 31.2 | 1.1145584 | 1562.12 | 1565.62 | 20.6148 | 0.0146928 | 0.1157563 | 1.5597772 | 0.06580 |
| 35.7 | 1.0606816 | 1558.98 | 1562.47 | 20.6339 | 0.0146493 | 0.1154135 | 1.5537198 | 0.06580 |
| 40.2 | 1.0071505 | 1556.94 | 1560.43 | 20.6463 | 0.0142739 | 0.1118398 | 1.5047020 | 0.06616 |

| | | | | | | | | |
|---|---|---|---|---|---|---|---|---|
| 48.2 | 0.9116490 | 1554.94 | 1558.42 | 20.6586 | 0.0136546 | 0.1059867 | 1.4251089 | 0.06679 |
| 56.2 | 0.8158670 | 1553.73 | 1557.21 | 20.6660 | 0.0133341 | 0.1034992 | 1.3911646 | 0.06679 |
| 64.2 | 0.7199271 | 1552.92 | 1556.40 | 20.6709 | 0.0132237 | 0.1026421 | 1.3793156 | 0.06679 |
| 76.2 | 0.5759752 | 1552.07 | 1555.55 | 20.6761 | 0.0129996 | 0.1009026 | 1.3555985 | 0.06679 |
| 88.2 | 0.4320009 | 1551.41 | 1554.88 | 20.6802 | 0.0127769 | 0.0991739 | 1.3321125 | 0.06679 |
| 100.2 | 0.2880096 | 1550.89 | 1554.37 | 20.6833 | 0.0125567 | 0.0974652 | 1.3089609 | 0.06679 |
| 112.2 | 0.1440070 | 1550.52 | 1553.99 | 20.6857 | 0.0123392 | 0.0957770 | 1.2861437 | 0.06679 |
| 124.2 | 0.0000000 | 1550.28 | 1553.75 | 20.6871 | 0.0121227 | 0.0940961 | 1.2634827 | 0.06679 |

calculated fluid conditions at time = 0.0000 seconds pressure = 0.0 psia
channel 7
assembly 1

| distance (in.) | delta-p (psi) | enthalpy (btu/lb) | temperature (deg-f) | density (lb/cu-ft) | flow (lb/sec) | mass flux (mlb/hr-ft2) | velocity (ft/sec) | area (sq-in) |
|---|---|---|---|---|---|---|---|---|
| 0.0 | 1.5025628 | 1415.97 | 1419.15 | 21.5441 | 0.0125855 | 0.0991540 | 1.2784377 | 0.06580 |
| 2.1 | 1.4686086 | 1415.97 | 1419.15 | 21.5441 | 0.0125855 | 0.0991540 | 1.2784369 | 0.06580 |
| 4.2 | 1.4422936 | 1415.97 | 1419.15 | 21.5441 | 0.0125397 | 0.0987928 | 1.2737810 | 0.06580 |
| 8.7 | 1.3865058 | 1458.15 | 1461.43 | 21.2674 | 0.0127693 | 0.1006022 | 1.3139884 | 0.06580 |
| 13.2 | 1.3312897 | 1496.14 | 1499.50 | 21.0242 | 0.0130688 | 0.1029611 | 1.3603540 | 0.06580 |
| 17.7 | 1.2766506 | 1531.89 | 1535.32 | 20.8004 | 0.0133811 | 0.1054217 | 1.4078503 | 0.06580 |
| 22.2 | 1.2226011 | 1566.48 | 1569.99 | 20.5883 | 0.0136906 | 0.1078602 | 1.4552502 | 0.06580 |
| 26.7 | 1.1685787 | 1560.60 | 1564.10 | 20.6240 | 0.0138605 | 0.1091992 | 1.4707638 | 0.06580 |
| 31.2 | 1.1145578 | 1557.49 | 1560.98 | 20.6430 | 0.0139526 | 0.1099245 | 1.4791721 | 0.06580 |
| 35.7 | 1.0606810 | 1555.72 | 1559.20 | 20.6538 | 0.0142251 | 0.1120713 | 1.5072709 | 0.06580 |
| 40.2 | 1.0071505 | 1554.66 | 1558.14 | 20.6603 | 0.0148460 | 0.1042206 | 1.4012446 | 0.07384 |
| 48.2 | 0.9116490 | 1553.59 | 1557.07 | 20.6668 | 0.0158129 | 0.0934591 | 1.2561602 | 0.08771 |
| 56.2 | 0.8158670 | 1552.89 | 1556.36 | 20.6711 | 0.0162543 | 0.0960674 | 1.2909494 | 0.08771 |
| 64.2 | 0.7199270 | 1552.35 | 1555.82 | 20.6744 | 0.0163448 | 0.0966025 | 1.2979322 | 0.08771 |
| 76.2 | 0.5759752 | 1551.67 | 1555.15 | 20.6786 | 0.0165097 | 0.0975769 | 1.3107641 | 0.08771 |
| 88.2 | 0.4320008 | 1551.12 | 1554.59 | 20.6820 | 0.0166592 | 0.0984610 | 1.3224223 | 0.08771 |
| 100.2 | 0.2880096 | 1550.68 | 1554.15 | 20.6846 | 0.0167904 | 0.0992361 | 1.3326590 | 0.08771 |
| 112.2 | 0.1440070 | 1550.36 | 1553.84 | 20.6866 | 0.0169044 | 0.0999099 | 1.3415814 | 0.08771 |
| 124.2 | 0.0000000 | 1550.18 | 1553.65 | 20.6877 | 0.0170144 | 0.1005600 | 1.3502375 | 0.08771 |

calculated fluid conditions at time = 0.0000 seconds pressure = 0.0 psia
channel 8
assembly 1

| distance (in.) | delta-p (psi) | enthalpy (btu/lb) | temperature (deg-f) | density (lb/cu-ft) | flow (lb/sec) | mass flux (mlb/hr-ft2) | velocity (ft/sec) | area (sq-in) |
|---|---|---|---|---|---|---|---|---|
| 0.0 | 1.5025628 | 1415.97 | 1419.15 | 21.5441 | 0.0125877 | 0.0991710 | 1.2786564 | 0.06580 |
| 2.1 | 1.4686077 | 1415.97 | 1419.15 | 21.5441 | 0.0125877 | 0.0991710 | 1.2786564 | 0.06580 |
| 4.2 | 1.4422948 | 1415.97 | 1419.15 | 21.5441 | 0.0125685 | 0.0990197 | 1.2767068 | 0.06580 |
| 8.7 | 1.3865062 | 1454.95 | 1458.22 | 21.2881 | 0.0127134 | 0.1001615 | 1.3069565 | 0.06580 |
| 13.2 | 1.3312900 | 1490.55 | 1493.89 | 21.0597 | 0.0128598 | 0.1013150 | 1.3363499 | 0.06580 |
| 17.7 | 1.2766507 | 1525.01 | 1528.43 | 20.8431 | 0.0129850 | 0.1023013 | 1.3633792 | 0.06580 |
| 22.2 | 1.2226006 | 1559.13 | 1562.62 | 20.6330 | 0.0131013 | 0.1032178 | 1.3895978 | 0.06580 |
| 26.7 | 1.1685783 | 1555.15 | 1558.63 | 20.6573 | 0.0131338 | 0.1034736 | 1.3914040 | 0.06580 |
| 31.2 | 1.1145577 | 1553.80 | 1557.28 | 20.6656 | 0.0131278 | 0.1034263 | 1.3902125 | 0.06580 |
| 35.7 | 1.0606810 | 1553.23 | 1556.71 | 20.6690 | 0.0132534 | 0.1044162 | 1.4032838 | 0.06580 |
| 40.2 | 1.0071505 | 1552.91 | 1556.39 | 20.6710 | 0.0136591 | 0.0958885 | 1.2885528 | 0.07384 |
| 48.2 | 0.9116489 | 1552.51 | 1555.99 | 20.6734 | 0.0142415 | 0.0841717 | 1.1309704 | 0.08771 |
| 56.2 | 0.8158670 | 1552.17 | 1555.64 | 20.6755 | 0.0145346 | 0.0859039 | 1.1541269 | 0.08771 |
| 64.2 | 0.7199270 | 1551.82 | 1555.30 | 20.6777 | 0.0146189 | 0.0864019 | 1.1606988 | 0.08771 |
| 76.2 | 0.5759752 | 1551.29 | 1554.77 | 20.6809 | 0.0148198 | 0.0875894 | 1.1764679 | 0.08771 |
| 88.2 | 0.4320008 | 1550.83 | 1554.30 | 20.6837 | 0.0150408 | 0.0888953 | 1.1938443 | 0.08771 |
| 100.2 | 0.2880096 | 1550.46 | 1553.93 | 20.6860 | 0.0152712 | 0.0902572 | 1.2120019 | 0.08771 |
| 112.2 | 0.1440070 | 1550.21 | 1553.68 | 20.6875 | 0.0154906 | 0.0915537 | 1.2293191 | 0.08771 |
| 124.2 | 0.0000000 | 1550.08 | 1553.55 | 20.6883 | 0.0156834 | 0.0926938 | 1.2445791 | 0.08771 |

calculated fluid conditions at time = 0.0000 seconds pressure = 0.0 psia
channel 9
assembly 1

| distance (in.) | delta-p (psi) | enthalpy (btu/lb) | temperature (deg-f) | density (lb/cu-ft) | flow (lb/sec) | mass flux (mlb/hr-ft2) | velocity (ft/sec) | area (sq-in) |
|---|---|---|---|---|---|---|---|---|
| 0.0 | 1.5025628 | 1415.97 | 1419.15 | 21.5441 | 0.0306540 | 0.0990095 | 1.2765743 | 0.16050 |
| 2.1 | 1.4686067 | 1415.96 | 1419.15 | 21.5441 | 0.0306540 | 0.0990096 | 1.2765752 | 0.16050 |
| 4.2 | 1.4422965 | 1415.98 | 1419.16 | 21.5440 | 0.0307598 | 0.0993514 | 1.2809859 | 0.16050 |
| 8.7 | 1.3865067 | 1444.05 | 1447.29 | 21.3591 | 0.0302398 | 0.0976718 | 1.2702344 | 0.16050 |
| 13.2 | 1.3312901 | 1475.01 | 1478.32 | 21.1588 | 0.0295185 | 0.0953419 | 1.2516710 | 0.16050 |

| | | | | | | | | |
|---|---|---|---|---|---|---|---|---|
| 17.7 | 1.2766508 | 1507.67 | 1511.05 | 20.9515 | 0.0287187 | 0.0927586 | 1.2298057 | 0.16050 |
| 22.2 | 1.2226000 | 1541.36 | 1544.81 | 20.7419 | 0.0278828 | 0.0900590 | 1.2060798 | 0.16050 |
| 26.7 | 1.1685780 | 1546.17 | 1549.63 | 20.7123 | 0.0273399 | 0.0883053 | 1.1842847 | 0.16050 |
| 31.2 | 1.1145580 | 1548.75 | 1552.22 | 20.6965 | 0.0269844 | 0.0871570 | 1.1697787 | 0.16050 |
| 35.7 | 1.0606815 | 1550.13 | 1553.60 | 20.6880 | 0.0265066 | 0.0856139 | 1.1495352 | 0.16050 |
| 40.2 | 1.0071504 | 1550.84 | 1554.32 | 20.6836 | 0.0256841 | 0.0783816 | 1.0526510 | 0.16987 |
| 48.2 | 0.9116488 | 1551.23 | 1554.71 | 20.6813 | 0.0243613 | 0.0678901 | 0.9118576 | 0.18602 |
| 56.2 | 0.8158668 | 1551.24 | 1554.71 | 20.6812 | 0.0237164 | 0.0660930 | 0.8877222 | 0.18602 |
| 64.2 | 0.7199270 | 1551.09 | 1554.56 | 20.6822 | 0.0235740 | 0.0656960 | 0.8823499 | 0.18602 |
| 76.2 | 0.5759752 | 1550.70 | 1554.18 | 20.6845 | 0.0234210 | 0.0652696 | 0.8765237 | 0.18602 |
| 88.2 | 0.4320008 | 1550.36 | 1553.83 | 20.6866 | 0.0233279 | 0.0650102 | 0.8729511 | 0.18602 |
| 100.2 | 0.2880096 | 1550.10 | 1553.57 | 20.6882 | 0.0232856 | 0.0648924 | 0.8713015 | 0.18602 |
| 112.2 | 0.1440070 | 1549.95 | 1553.42 | 20.6891 | 0.0232951 | 0.0649188 | 0.8716182 | 0.18602 |
| 124.2 | 0.0000000 | 1549.93 | 1553.40 | 20.6893 | 0.0233149 | 0.0649742 | 0.8723548 | 0.18602 |

calculated fluid conditions at time = 0.0000 seconds pressure = 0.0 psia
channel 10
assembly 1

| distance (in.) | delta-p (psi) | enthalpy (btu/lb) | temperature (deg-f) | density (lb/cu-ft) | flow (lb/sec) | mass flux (mlb/hr-ft2) | velocity (ft/sec) | area (sq-in) |
|---|---|---|---|---|---|---|---|---|
| 0.0 | 1.5025628 | 1415.97 | 1419.15 | 21.5441 | 0.0306490 | 0.0989935 | 1.2763684 | 0.16050 |
| 2.1 | 1.4686080 | 1415.97 | 1419.15 | 21.5441 | 0.0306490 | 0.0989936 | 1.2763685 | 0.16050 |
| 4.2 | 1.4422947 | 1415.98 | 1419.16 | 21.5440 | 0.0307277 | 0.0992477 | 1.2796495 | 0.16050 |
| 8.7 | 1.3865055 | 1445.92 | 1449.17 | 21.3469 | 0.0303136 | 0.0979102 | 1.2740644 | 0.16050 |
| 13.2 | 1.3312892 | 1478.48 | 1481.80 | 21.1366 | 0.0298025 | 0.0962592 | 1.2650435 | 0.16050 |
| 17.7 | 1.2766502 | 1512.34 | 1515.73 | 20.9222 | 0.0292908 | 0.0946064 | 1.2560630 | 0.16050 |
| 22.2 | 1.2226005 | 1546.79 | 1550.25 | 20.7085 | 0.0287936 | 0.0930008 | 1.2474834 | 0.16050 |
| 26.7 | 1.1685785 | 1550.82 | 1554.29 | 20.6838 | 0.0285379 | 0.0921749 | 1.2378829 | 0.16050 |
| 31.2 | 1.1145578 | 1552.69 | 1556.17 | 20.6723 | 0.0284145 | 0.0917762 | 1.2332136 | 0.16050 |
| 35.7 | 1.0606812 | 1553.46 | 1556.94 | 20.6676 | 0.0281764 | 0.0910071 | 1.2231561 | 0.16050 |
| 40.2 | 1.0071504 | 1553.67 | 1557.15 | 20.6664 | 0.0276436 | 0.0843616 | 1.1339086 | 0.16987 |
| 48.2 | 0.9116492 | 1553.37 | 1556.85 | 20.6682 | 0.0268651 | 0.0748678 | 1.0062150 | 0.18602 |
| 56.2 | 0.8158672 | 1552.87 | 1556.35 | 20.6712 | 0.0265044 | 0.0738625 | 0.9925562 | 0.18602 |
| 64.2 | 0.7199271 | 1552.34 | 1555.81 | 20.6745 | 0.0264268 | 0.0736464 | 0.9894965 | 0.18602 |
| 76.2 | 0.5759752 | 1551.58 | 1555.06 | 20.6791 | 0.0262560 | 0.0731703 | 0.9828795 | 0.18602 |
| 88.2 | 0.4320009 | 1550.98 | 1554.45 | 20.6828 | 0.0260790 | 0.0726770 | 0.9760789 | 0.18602 |

| | | | | | | | | |
|---|---|---|---|---|---|---|---|---|
| 100.2 | 0.2880096 | 1550.54 | 1554.01 | 20.6855 | 0.0259044 | 0.0721984 | 0.9694172 | 0.18602 |
| 112.2 | 0.1440070 | 1550.25 | 1553.73 | 20.6873 | 0.0257390 | 0.0717295 | 0.9631475 | 0.18602 |
| 124.2 | 0.0000000 | 1550.13 | 1553.61 | 20.6880 | 0.0255821 | 0.0712924 | 0.9572437 | 0.18602 |

calculated fluid conditions at time = 0.0000 seconds pressure = 0.0 psia
channel 11
assembly 1

| distance (in.) | delta-p (psi) | enthalpy (btu/lb) | temperature (deg-f) | density (lb/cu-ft) | flow (lb/sec) | mass flux (mlb/hr-ft2) | velocity (ft/sec) | area (sq-in) |
|---|---|---|---|---|---|---|---|---|
| 0.0 | 1.5025628 | 1415.97 | 1419.15 | 21.5441 | 0.0125857 | 0.0991555 | 1.2784568 | 0.06580 |
| 2.1 | 1.4686089 | 1415.97 | 1419.15 | 21.5441 | 0.0125857 | 0.0991555 | 1.2784561 | 0.06580 |
| 4.2 | 1.4422933 | 1415.97 | 1419.15 | 21.5441 | 0.0125520 | 0.0988900 | 1.2750347 | 0.06580 |
| 8.7 | 1.3865053 | 1457.07 | 1460.34 | 21.2744 | 0.0127487 | 0.1004394 | 1.3114285 | 0.06580 |
| 13.2 | 1.3312892 | 1494.18 | 1497.53 | 21.0366 | 0.0129890 | 0.1023326 | 1.3512504 | 0.06580 |
| 17.7 | 1.2766502 | 1529.70 | 1533.13 | 20.8140 | 0.0132384 | 0.1042976 | 1.3919289 | 0.06580 |
| 22.2 | 1.2226010 | 1564.45 | 1567.96 | 20.6006 | 0.0134964 | 0.1063306 | 1.4337564 | 0.06580 |
| 26.7 | 1.1685788 | 1559.44 | 1562.94 | 20.6311 | 0.0136462 | 0.1075106 | 1.4475254 | 0.06580 |
| 31.2 | 1.1145575 | 1557.32 | 1560.80 | 20.6441 | 0.0137364 | 0.1082210 | 1.4561750 | 0.06580 |
| 35.7 | 1.0606807 | 1556.15 | 1559.63 | 20.6512 | 0.0139784 | 0.1101276 | 1.4813184 | 0.06580 |
| 40.2 | 1.0071505 | 1555.35 | 1558.84 | 20.6561 | 0.0145347 | 0.1020352 | 1.3721455 | 0.07384 |
| 48.2 | 0.9116493 | 1554.35 | 1557.84 | 20.6622 | 0.0154274 | 0.0911805 | 1.2258121 | 0.08771 |
| 56.2 | 0.8158672 | 1553.57 | 1557.05 | 20.6670 | 0.0158810 | 0.0938614 | 1.2615590 | 0.08771 |
| 64.2 | 0.7199271 | 1552.90 | 1556.38 | 20.6711 | 0.0160080 | 0.0946120 | 1.2713964 | 0.08771 |
| 76.2 | 0.5759752 | 1552.05 | 1555.52 | 20.6763 | 0.0162188 | 0.0958579 | 1.2878133 | 0.08771 |
| 88.2 | 0.4320009 | 1551.36 | 1554.84 | 20.6805 | 0.0164081 | 0.0969764 | 1.3025766 | 0.08771 |
| 100.2 | 0.2880096 | 1550.84 | 1554.31 | 20.6837 | 0.0165782 | 0.0979823 | 1.3158829 | 0.08771 |
| 112.2 | 0.1440070 | 1550.47 | 1553.94 | 20.6859 | 0.0167311 | 0.0988855 | 1.3278681 | 0.08771 |
| 124.2 | 0.0000000 | 1550.26 | 1553.73 | 20.6872 | 0.0168674 | 0.0996912 | 1.3386043 | 0.08771 |

calculated fluid conditions at time = 0.0000 seconds pressure = 0.0 psia
channel 12
assembly 1

| distance | delta-p | enthalpy | temperature | density | flow | mass flux | velocity | area |
|---|---|---|---|---|---|---|---|---|

| (in.) | (psi) | (btu/lb) | (deg-f) | (lb/cu-ft) | (lb/sec) | (mlb/hr-ft2) | (ft/sec) | (sq-in) |
|---|---|---|---|---|---|---|---|---|
| 0.0 | 1.5025628 | 1415.97 | 1419.15 | 21.5441 | 0.0125861 | 0.0991585 | 1.2784948 | 0.06580 |
| 2.1 | 1.4686086 | 1415.97 | 1419.15 | 21.5441 | 0.0125861 | 0.0991584 | 1.2784943 | 0.06580 |
| 4.2 | 1.4422936 | 1415.97 | 1419.15 | 21.5441 | 0.0125556 | 0.0989182 | 1.2753987 | 0.06580 |
| 8.7 | 1.3865055 | 1456.66 | 1459.93 | 21.2771 | 0.0127406 | 0.1003761 | 1.3104366 | 0.06580 |
| 13.2 | 1.3312894 | 1493.46 | 1496.81 | 21.0412 | 0.0129572 | 0.1020821 | 1.3476507 | 0.06580 |
| 17.7 | 1.2766503 | 1528.77 | 1532.20 | 20.8197 | 0.0131720 | 0.1037744 | 1.3845629 | 0.06580 |
| 22.2 | 1.2226009 | 1563.40 | 1566.90 | 20.6070 | 0.0133888 | 0.1054826 | 1.4218789 | 0.06580 |
| 26.7 | 1.1685787 | 1558.59 | 1562.08 | 20.6363 | 0.0135030 | 0.1063826 | 1.4319780 | 0.06580 |
| 31.2 | 1.1145575 | 1556.62 | 1560.11 | 20.6483 | 0.0135623 | 0.1068498 | 1.4374308 | 0.06580 |
| 35.7 | 1.0606808 | 1555.57 | 1559.06 | 20.6547 | 0.0137662 | 0.1084557 | 1.4585814 | 0.06580 |
| 40.2 | 1.0071505 | 1554.87 | 1558.35 | 20.6590 | 0.0142772 | 0.1002280 | 1.3476494 | 0.07384 |
| 48.2 | 0.9116492 | 1553.98 | 1557.46 | 20.6644 | 0.0150706 | 0.0890719 | 1.1973329 | 0.08771 |
| 56.2 | 0.8158672 | 1553.28 | 1556.76 | 20.6687 | 0.0154640 | 0.0913965 | 1.2283249 | 0.08771 |
| 64.2 | 0.7199271 | 1552.68 | 1556.15 | 20.6724 | 0.0155669 | 0.0920046 | 1.2362771 | 0.08771 |
| 76.2 | 0.5759752 | 1551.89 | 1555.37 | 20.6772 | 0.0157316 | 0.0929783 | 1.2490696 | 0.08771 |
| 88.2 | 0.4320009 | 1551.25 | 1554.72 | 20.6812 | 0.0158765 | 0.0938348 | 1.2603376 | 0.08771 |
| 100.2 | 0.2880096 | 1550.76 | 1554.23 | 20.6842 | 0.0160016 | 0.0945744 | 1.2700863 | 0.08771 |
| 112.2 | 0.1440070 | 1550.41 | 1553.89 | 20.6863 | 0.0161091 | 0.0952094 | 1.2784834 | 0.08771 |
| 124.2 | 0.0000000 | 1550.22 | 1553.69 | 20.6875 | 0.0162351 | 0.0959544 | 1.2884129 | 0.08771 |

calculated fluid conditions at time = 0.0000 seconds pressure = 0.0 psia
channel 13
assembly 1

| distance (in.) | delta-p (psi) | enthalpy (btu/lb) | temperature (deg-f) | density (lb/cu-ft) | flow (lb/sec) | mass flux (mlb/hr-ft2) | velocity (ft/sec) | area (sq-in) |
|---|---|---|---|---|---|---|---|---|
| 0.0 | 1.5025628 | 1415.97 | 1419.15 | 21.5441 | 0.0125846 | 0.0991469 | 1.2783460 | 0.06580 |
| 2.1 | 1.4686091 | 1415.97 | 1419.15 | 21.5441 | 0.0125846 | 0.0991468 | 1.2783449 | 0.06580 |
| 4.2 | 1.4422929 | 1415.97 | 1419.15 | 21.5441 | 0.0125325 | 0.0987362 | 1.2730505 | 0.06580 |
| 8.7 | 1.3865054 | 1459.10 | 1462.37 | 21.2612 | 0.0127845 | 0.1007214 | 1.3159229 | 0.06580 |
| 13.2 | 1.3312894 | 1497.77 | 1501.13 | 21.0139 | 0.0131231 | 0.1033895 | 1.3666795 | 0.06580 |
| 17.7 | 1.2766504 | 1533.98 | 1537.42 | 20.7875 | 0.0134856 | 0.1062448 | 1.4197240 | 0.06580 |
| 22.2 | 1.2226013 | 1568.84 | 1572.36 | 20.5740 | 0.0138508 | 0.1091222 | 1.4733049 | 0.06580 |
| 26.7 | 1.1685789 | 1562.54 | 1566.04 | 20.6123 | 0.0140667 | 0.1108234 | 1.4934936 | 0.06580 |
| 31.2 | 1.1145577 | 1559.07 | 1562.57 | 20.6334 | 0.0141962 | 0.1118440 | 1.5057066 | 0.06580 |
| 35.7 | 1.0606808 | 1557.03 | 1560.51 | 20.6458 | 0.0145187 | 0.1143846 | 1.5389779 | 0.06580 |

| | | | | | | | | |
|---|---|---|---|---|---|---|---|---|
| 40.2 | 1.0071505 | 1555.71 | 1559.19 | 20.6539 | 0.0152005 | 0.1067096 | 1.4351563 | 0.07384 |
| 48.2 | 0.9116492 | 1554.33 | 1557.81 | 20.6623 | 0.0162887 | 0.0962710 | 1.2942381 | 0.08771 |
| 56.2 | 0.8158672 | 1553.45 | 1556.93 | 20.6677 | 0.0167969 | 0.0992744 | 1.3342657 | 0.08771 |
| 64.2 | 0.7199271 | 1552.78 | 1556.26 | 20.6718 | 0.0169039 | 0.0999072 | 1.3425061 | 0.08771 |
| 76.2 | 0.5759752 | 1551.98 | 1555.45 | 20.6767 | 0.0170642 | 0.1008542 | 1.3549094 | 0.08771 |
| 88.2 | 0.4320009 | 1551.33 | 1554.81 | 20.6807 | 0.0171942 | 0.1016225 | 1.3649699 | 0.08771 |
| 100.2 | 0.2880096 | 1550.83 | 1554.30 | 20.6837 | 0.0172971 | 0.1022309 | 1.3729374 | 0.08771 |
| 112.2 | 0.1440070 | 1550.47 | 1553.94 | 20.6859 | 0.0173791 | 0.1027157 | 1.3793002 | 0.08771 |
| 124.2 | 0.0000000 | 1550.25 | 1553.72 | 20.6873 | 0.0174650 | 0.1032234 | 1.3860290 | 0.08771 |

calculated fluid conditions at time = 0.0000 seconds pressure = 0.0 psia
channel 14
assembly 1

| distance (in.) | delta-p (psi) | enthalpy (btu/lb) | temperature (deg-f) | density (lb/cu-ft) | flow (lb/sec) | mass flux (mlb/hr-ft2) | velocity (ft/sec) | area (sq-in) |
|---|---|---|---|---|---|---|---|---|
| 0.0 | 1.5025628 | 1415.97 | 1419.15 | 21.5441 | 0.0125869 | 0.0991649 | 1.2785777 | 0.06580 |
| 2.1 | 1.4686082 | 1415.97 | 1419.15 | 21.5441 | 0.0125869 | 0.0991649 | 1.2785775 | 0.06580 |
| 4.2 | 1.4422942 | 1415.97 | 1419.15 | 21.5441 | 0.0125617 | 0.0989664 | 1.2760199 | 0.06580 |
| 8.7 | 1.3865059 | 1455.81 | 1459.08 | 21.2826 | 0.0127280 | 0.1002767 | 1.3088013 | 0.06580 |
| 13.2 | 1.3312897 | 1492.03 | 1495.37 | 21.0503 | 0.0129145 | 0.1017456 | 1.3426282 | 0.06580 |
| 17.7 | 1.2766505 | 1526.93 | 1530.35 | 20.8312 | 0.0130940 | 0.1031604 | 1.3756146 | 0.06580 |
| 22.2 | 1.2226008 | 1561.30 | 1564.80 | 20.6198 | 0.0132732 | 0.1045722 | 1.4087367 | 0.06580 |
| 26.7 | 1.1685785 | 1556.90 | 1560.39 | 20.6466 | 0.0133581 | 0.1052406 | 1.4158977 | 0.06580 |
| 31.2 | 1.1145576 | 1555.23 | 1558.71 | 20.6568 | 0.0133953 | 0.1055339 | 1.4191413 | 0.06580 |
| 35.7 | 1.0606809 | 1554.41 | 1557.89 | 20.6618 | 0.0135734 | 0.1069369 | 1.4376603 | 0.06580 |
| 40.2 | 1.0071505 | 1553.88 | 1557.36 | 20.6651 | 0.0140460 | 0.0986049 | 1.3254369 | 0.07384 |
| 48.2 | 0.9116491 | 1553.23 | 1556.70 | 20.6691 | 0.0147685 | 0.0872861 | 1.1730650 | 0.08771 |
| 56.2 | 0.8158671 | 1552.70 | 1556.18 | 20.6723 | 0.0151370 | 0.0894639 | 1.2021458 | 0.08771 |
| 64.2 | 0.7199271 | 1552.23 | 1555.71 | 20.6752 | 0.0152464 | 0.0901107 | 1.2106681 | 0.08771 |
| 76.2 | 0.5759752 | 1551.58 | 1555.05 | 20.6791 | 0.0154771 | 0.0914745 | 1.2287531 | 0.08771 |
| 88.2 | 0.4320009 | 1551.03 | 1554.50 | 20.6825 | 0.0157118 | 0.0928616 | 1.2471844 | 0.08771 |
| 100.2 | 0.2880096 | 1550.60 | 1554.08 | 20.6851 | 0.0159369 | 0.0941920 | 1.2648924 | 0.08771 |
| 112.2 | 0.1440070 | 1550.31 | 1553.78 | 20.6869 | 0.0161468 | 0.0954323 | 1.2814354 | 0.08771 |
| 124.2 | 0.0000000 | 1550.15 | 1553.62 | 20.6879 | 0.0163200 | 0.0964557 | 1.2951163 | 0.08771 |

calculated fluid conditions at time = 0.0000 seconds pressure = 0.0 psia
channel 15
assembly 1

| distance (in.) | delta-p (psi) | enthalpy (btu/lb) | temperature (deg-f) | density (lb/cu-ft) | flow (lb/sec) | mass flux (mlb/hr-ft2) | velocity (ft/sec) | area (sq-in) |
|---|---|---|---|---|---|---|---|---|
| 0.0 | 1.5025628 | 1415.97 | 1419.15 | 21.5441 | 0.0125873 | 0.0991680 | 1.2786173 | 0.06580 |
| 2.1 | 1.4686080 | 1415.97 | 1419.15 | 21.5441 | 0.0125873 | 0.0991680 | 1.2786172 | 0.06580 |
| 4.2 | 1.4422945 | 1415.97 | 1419.15 | 21.5441 | 0.0125654 | 0.0989956 | 1.2763958 | 0.06580 |
| 8.7 | 1.3865060 | 1455.38 | 1458.65 | 21.2853 | 0.0127198 | 0.1002117 | 1.3077831 | 0.06580 |
| 13.2 | 1.3312898 | 1491.28 | 1494.63 | 21.0550 | 0.0128815 | 0.1014860 | 1.3389020 | 0.06580 |
| 17.7 | 1.2766506 | 1525.96 | 1529.38 | 20.8372 | 0.0130248 | 0.1026151 | 1.3679496 | 0.06580 |
| 22.2 | 1.2226007 | 1560.21 | 1563.70 | 20.6264 | 0.0131606 | 0.1036844 | 1.3963247 | 0.06580 |
| 26.7 | 1.1685784 | 1556.02 | 1559.50 | 20.6520 | 0.0132079 | 0.1040574 | 1.3996146 | 0.06580 |
| 31.2 | 1.1145577 | 1554.51 | 1558.00 | 20.6612 | 0.0132128 | 0.1040957 | 1.3995075 | 0.06580 |
| 35.7 | 1.0606810 | 1553.82 | 1557.30 | 20.6654 | 0.0133503 | 0.1051793 | 1.4137858 | 0.06580 |
| 40.2 | 1.0071505 | 1553.40 | 1556.88 | 20.6680 | 0.0137738 | 0.0966942 | 1.2995697 | 0.07384 |
| 48.2 | 0.9116490 | 1552.88 | 1556.36 | 20.6712 | 0.0143855 | 0.0850222 | 1.1425234 | 0.08771 |
| 56.2 | 0.8158670 | 1552.44 | 1555.92 | 20.6739 | 0.0146876 | 0.0868078 | 1.1663662 | 0.08771 |
| 64.2 | 0.7199270 | 1552.03 | 1555.51 | 20.6764 | 0.0147712 | 0.0873022 | 1.1728658 | 0.08771 |
| 76.2 | 0.5759752 | 1551.44 | 1554.91 | 20.6800 | 0.0149449 | 0.0883289 | 1.1864514 | 0.08771 |
| 88.2 | 0.4320008 | 1550.93 | 1554.41 | 20.6831 | 0.0151254 | 0.0893955 | 1.2005971 | 0.08771 |
| 100.2 | 0.2880096 | 1550.53 | 1554.01 | 20.6855 | 0.0153088 | 0.0904796 | 1.2150144 | 0.08771 |
| 112.2 | 0.1440070 | 1550.26 | 1553.73 | 20.6872 | 0.0154907 | 0.0915548 | 1.2293513 | 0.08771 |
| 124.2 | 0.0000000 | 1550.11 | 1553.58 | 20.6881 | 0.0156686 | 0.0926059 | 1.2434120 | 0.08771 |

calculated fluid conditions at time = 0.0000 seconds pressure = 0.0 psia
channel 16
assembly 1

| distance (in.) | delta-p (psi) | enthalpy (btu/lb) | temperature (deg-f) | density (lb/cu-ft) | flow (lb/sec) | mass flux (mlb/hr-ft2) | velocity (ft/sec) | area (sq-in) |
|---|---|---|---|---|---|---|---|---|
| 0.0 | 1.5025628 | 1415.97 | 1419.15 | 21.5441 | 0.0306531 | 0.0990068 | 1.2765394 | 0.16050 |
| 2.1 | 1.4686069 | 1415.96 | 1419.15 | 21.5441 | 0.0306532 | 0.0990069 | 1.2765401 | 0.16050 |
| 4.2 | 1.4422962 | 1415.98 | 1419.16 | 21.5440 | 0.0307523 | 0.0993271 | 1.2806734 | 0.16050 |
| 8.7 | 1.3865065 | 1444.45 | 1447.69 | 21.3565 | 0.0302549 | 0.0977206 | 1.2710242 | 0.16050 |

| | | | | | | | | |
|---|---|---|---|---|---|---|---|---|
| 13.2 | 1.3312900 | 1475.72 | 1479.04 | 21.1542 | 0.0295769 | 0.0955307 | 1.2544223 | 0.16050 |
| 17.7 | 1.2766507 | 1508.62 | 1512.00 | 20.9456 | 0.0288357 | 0.0931365 | 1.2351669 | 0.16050 |
| 22.2 | 1.2226001 | 1542.45 | 1545.90 | 20.7352 | 0.0280685 | 0.0906588 | 1.2145040 | 0.16050 |
| 26.7 | 1.1685780 | 1547.06 | 1550.53 | 20.7068 | 0.0275812 | 0.0890847 | 1.1950513 | 0.16050 |
| 31.2 | 1.1145580 | 1549.48 | 1552.95 | 20.6920 | 0.0272688 | 0.0880757 | 1.1823657 | 0.16050 |
| 35.7 | 1.0606814 | 1550.73 | 1554.21 | 20.6843 | 0.0268354 | 0.0866758 | 1.1640033 | 0.16050 |
| 40.2 | 1.0071504 | 1551.35 | 1554.82 | 20.6805 | 0.0260686 | 0.0795549 | 1.0685687 | 0.16987 |
| 48.2 | 0.9116488 | 1551.61 | 1555.09 | 20.6789 | 0.0248484 | 0.0692477 | 0.9301968 | 0.18602 |
| 56.2 | 0.8158669 | 1551.53 | 1555.00 | 20.6795 | 0.0242548 | 0.0675933 | 0.9079500 | 0.18602 |
| 64.2 | 0.7199270 | 1551.30 | 1554.78 | 20.6808 | 0.0241228 | 0.0672255 | 0.9029495 | 0.18602 |
| 76.2 | 0.5759752 | 1550.86 | 1554.33 | 20.6836 | 0.0239625 | 0.0667787 | 0.8968294 | 0.18602 |
| 88.2 | 0.4320008 | 1550.47 | 1553.94 | 20.6860 | 0.0238489 | 0.0664621 | 0.8924752 | 0.18602 |
| 100.2 | 0.2880096 | 1550.17 | 1553.65 | 20.6877 | 0.0237711 | 0.0662453 | 0.8894866 | 0.18602 |
| 112.2 | 0.1440070 | 1550.00 | 1553.47 | 20.6888 | 0.0237228 | 0.0661109 | 0.8876365 | 0.18602 |
| 124.2 | 0.0000000 | 1549.96 | 1553.43 | 20.6890 | 0.0236957 | 0.0660352 | 0.8866100 | 0.18602 |

calculated fluid conditions at time = 0.0000 seconds pressure = 0.0 psia
channel 17
assembly 1

| distance (in.) | delta-p (psi) | enthalpy (btu/lb) | temperature (deg-f) | density (lb/cu-ft) | flow (lb/sec) | mass flux (mlb/hr-ft2) | velocity (ft/sec) | area (sq-in) |
|---|---|---|---|---|---|---|---|---|
| 0.0 | 1.5025628 | 1415.97 | 1419.15 | 21.5441 | 0.0306503 | 0.0989978 | 1.2764228 | 0.16050 |
| 2.1 | 1.4686077 | 1415.97 | 1419.15 | 21.5441 | 0.0306504 | 0.0989978 | 1.2764230 | 0.16050 |
| 4.2 | 1.4422952 | 1415.98 | 1419.16 | 21.5440 | 0.0307339 | 0.0992677 | 1.2799081 | 0.16050 |
| 8.7 | 1.3865059 | 1445.52 | 1448.77 | 21.3495 | 0.0302970 | 0.0978564 | 1.2732072 | 0.16050 |
| 13.2 | 1.3312895 | 1477.72 | 1481.04 | 21.1414 | 0.0297394 | 0.0960554 | 1.2620761 | 0.16050 |
| 17.7 | 1.2766504 | 1511.31 | 1514.70 | 20.9286 | 0.0291635 | 0.0941955 | 1.2502226 | 0.16050 |
| 22.2 | 1.2226003 | 1545.59 | 1549.05 | 20.7159 | 0.0285912 | 0.0923469 | 1.2382726 | 0.16050 |
| 26.7 | 1.1685783 | 1549.77 | 1553.24 | 20.6902 | 0.0282701 | 0.0913098 | 1.2258837 | 0.16050 |
| 31.2 | 1.1145578 | 1551.79 | 1555.26 | 20.6779 | 0.0280925 | 0.0907361 | 1.2189105 | 0.16050 |
| 35.7 | 1.0606812 | 1552.69 | 1556.16 | 20.6724 | 0.0277978 | 0.0897844 | 1.2064466 | 0.16050 |
| 40.2 | 1.0071504 | 1553.01 | 1556.48 | 20.6704 | 0.0271982 | 0.0830023 | 1.1154207 | 0.16987 |
| 48.2 | 0.9116491 | 1552.87 | 1556.34 | 20.6713 | 0.0262911 | 0.0732682 | 0.9845684 | 0.18602 |
| 56.2 | 0.8158671 | 1552.48 | 1555.96 | 20.6736 | 0.0258613 | 0.0720704 | 0.9683618 | 0.18602 |
| 64.2 | 0.7199271 | 1552.04 | 1555.51 | 20.6763 | 0.0257678 | 0.0718099 | 0.9647355 | 0.18602 |
| 76.2 | 0.5759752 | 1551.37 | 1554.84 | 20.6804 | 0.0255980 | 0.0713365 | 0.9581862 | 0.18602 |

| | | | | | | | | |
|---|---|---|---|---|---|---|---|---|
| 88.2 | 0.4320009 | 1550.83 | 1554.30 | 20.6837 | 0.0254349 | 0.0708821 | 0.9519303 | 0.18602 |
| 100.2 | 0.2880096 | 1550.43 | 1553.90 | 20.6862 | 0.0252815 | 0.0704546 | 0.9460776 | 0.18602 |
| 112.2 | 0.1440070 | 1550.18 | 1553.65 | 20.6877 | 0.0251421 | 0.0700660 | 0.9407895 | 0.18602 |
| 124.2 | 0.0000000 | 1550.08 | 1553.55 | 20.6883 | 0.0250177 | 0.0697196 | 0.9361110 | 0.18602 |

calculated fluid conditions at time = 0.0000 seconds pressure = 0.0 psia
channel 18
assembly 1

| distance (in.) | delta-p (psi) | enthalpy (btu/lb) | temperature (deg-f) | density (lb/cu-ft) | flow (lb/sec) | mass flux (mlb/hr-ft2) | velocity (ft/sec) | area (sq-in) |
|---|---|---|---|---|---|---|---|---|
| 0.0 | 1.5025628 | 1415.97 | 1419.15 | 21.5441 | 0.0306518 | 0.0990025 | 1.2764840 | 0.16050 |
| 2.1 | 1.4686073 | 1415.96 | 1419.15 | 21.5441 | 0.0306518 | 0.0990026 | 1.2764844 | 0.16050 |
| 4.2 | 1.4422957 | 1415.98 | 1419.16 | 21.5440 | 0.0307459 | 0.0993065 | 1.2804081 | 0.16050 |
| 8.7 | 1.3865062 | 1444.86 | 1448.11 | 21.3538 | 0.0302721 | 0.0977760 | 1.2719070 | 0.16050 |
| 13.2 | 1.3312897 | 1476.51 | 1479.83 | 21.1492 | 0.0296422 | 0.0957416 | 1.2574923 | 0.16050 |
| 17.7 | 1.2766505 | 1509.69 | 1513.07 | 20.9388 | 0.0289679 | 0.0935638 | 1.2412324 | 0.16050 |
| 22.2 | 1.2226002 | 1543.70 | 1547.16 | 20.7275 | 0.0282799 | 0.0913416 | 1.2241061 | 0.16050 |
| 26.7 | 1.1685782 | 1548.15 | 1551.62 | 20.7001 | 0.0278615 | 0.0899899 | 1.2075850 | 0.16050 |
| 31.2 | 1.1145579 | 1550.41 | 1553.89 | 20.6863 | 0.0276056 | 0.0891634 | 1.1972965 | 0.16050 |
| 35.7 | 1.0606813 | 1551.52 | 1554.99 | 20.6795 | 0.0272303 | 0.0879514 | 1.1814087 | 0.16050 |
| 40.2 | 1.0071504 | 1552.01 | 1555.49 | 20.6765 | 0.0265335 | 0.0809739 | 1.0878406 | 0.16987 |
| 48.2 | 0.9116489 | 1552.10 | 1555.57 | 20.6760 | 0.0254433 | 0.0709056 | 0.9526031 | 0.18602 |
| 56.2 | 0.8158670 | 1551.89 | 1555.36 | 20.6772 | 0.0249167 | 0.0694381 | 0.9328304 | 0.18602 |
| 64.2 | 0.7199271 | 1551.58 | 1555.05 | 20.6791 | 0.0247964 | 0.0691028 | 0.9282414 | 0.18602 |
| 76.2 | 0.5759752 | 1551.05 | 1554.52 | 20.6824 | 0.0246281 | 0.0686338 | 0.9217959 | 0.18602 |
| 88.2 | 0.4320008 | 1550.60 | 1554.07 | 20.6851 | 0.0245012 | 0.0682801 | 0.9169248 | 0.18602 |
| 100.2 | 0.2880096 | 1550.27 | 1553.74 | 20.6872 | 0.0244209 | 0.0680563 | 0.9138298 | 0.18602 |
| 112.2 | 0.1440070 | 1550.07 | 1553.54 | 20.6884 | 0.0243761 | 0.0679315 | 0.9120987 | 0.18602 |
| 124.2 | 0.0000000 | 1550.01 | 1553.48 | 20.6888 | 0.0243262 | 0.0677922 | 0.9102125 | 0.18602 |

calculated fluid conditions at time = 0.0000 seconds pressure = 0.0 psia
channel 1
assembly 2

| distance (in.) | delta-p (psi) | enthalpy (btu/lb) | temperature (deg-f) | density (lb/cu-ft) | flow (lb/sec) | mass flux (mlb/hr-ft2) | velocity (ft/sec) | area (sq-in) |
|---|---|---|---|---|---|---|---|---|
| 0.0 | 1.5025628 | 1415.97 | 1419.15 | 21.5441 | -0.0558263 | -0.1053142 | -1.3577705 | 0.27480 |
| 2.1 | 1.4764773 | 1415.74 | 1418.93 | 21.5456 | -0.0558255 | -0.1053127 | -1.3587040 | 0.27480 |
| 4.2 | 1.4504275 | 1418.02 | 1421.21 | 21.5305 | -0.0558312 | -0.1053235 | -1.3597993 | 0.27480 |
| 8.7 | 1.3947029 | 1420.30 | 1423.49 | 21.5153 | -0.0558294 | -0.1053201 | -1.3617649 | 0.27480 |
| 13.2 | 1.3390598 | 1425.10 | 1428.30 | 21.4836 | -0.0558263 | -0.1053142 | -1.3636640 | 0.27480 |
| 17.7 | 1.2834979 | 1429.82 | 1433.03 | 21.4525 | -0.0558208 | -0.1053040 | -1.3654677 | 0.27480 |
| 22.2 | 1.2280151 | 1434.44 | 1437.66 | 21.4220 | -0.0558155 | -0.1052938 | -1.3672292 | 0.27480 |
| 26.7 | 1.1726090 | 1438.96 | 1442.19 | 21.3924 | -0.0558122 | -0.1052876 | -1.3690484 | 0.27480 |
| 31.2 | 1.1172799 | 1443.50 | 1446.74 | 21.3627 | -0.0558114 | -0.1052862 | -1.3709410 | 0.27480 |
| 35.7 | 1.0620281 | 1448.06 | 1451.32 | 21.3329 | -0.0558127 | -0.1052885 | -1.3728958 | 0.27480 |
| 40.2 | 1.0068516 | 1452.66 | 1455.92 | 21.3030 | -0.0558149 | -0.1052928 | -1.3748893 | 0.27480 |
| 48.2 | 0.9089397 | 1457.29 | 1460.56 | 21.2730 | -0.0558172 | -0.1052971 | -1.3784117 | 0.27480 |
| 56.2 | 0.8112724 | 1465.56 | 1468.85 | 21.2195 | -0.0558212 | -0.1053046 | -1.3820242 | 0.27480 |
| 64.2 | 0.7138515 | 1473.96 | 1477.26 | 21.1655 | -0.0558244 | -0.1053107 | -1.3856700 | 0.27480 |
| 76.2 | 0.5681267 | 1482.47 | 1485.80 | 21.1111 | -0.0558267 | -0.1053150 | -1.3911422 | 0.27480 |
| 88.2 | 0.4229682 | 1495.40 | 1498.75 | 21.0289 | -0.0558295 | -0.1053203 | -1.3967488 | 0.27480 |
| 100.2 | 0.2783867 | 1508.62 | 1512.00 | 20.9455 | -0.0558315 | -0.1053240 | -1.4024614 | 0.27480 |
| 112.2 | 0.1344000 | 1522.14 | 1525.55 | 20.8609 | -0.0558327 | -0.1053264 | -1.4082901 | 0.27480 |
| 124.2 | 0.0000000 | 1535.98 | 1539.42 | 20.7751 | -0.0558335 | -0.1053278 | -1.3579162 | 0.27480 |

calculated fluid conditions at time = 0.0000 seconds pressure = 0.0 psia

channel 2

assembly 2

| distance (in.) | delta-p (psi) | enthalpy (btu/lb) | temperature (deg-f) | density (lb/cu-ft) | flow (lb/sec) | mass flux (mlb/hr-ft2) | velocity (ft/sec) | area (sq-in) |
|---|---|---|---|---|---|---|---|---|
| 0.0 | 1.5025628 | 1415.97 | 1419.15 | 21.5441 | -0.0558334 | -0.1053276 | -1.3579365 | 0.27480 |
| 2.1 | 1.4764772 | 1415.73 | 1418.91 | 21.5457 | -0.0558328 | -0.1053265 | -1.3588743 | 0.27480 |
| 4.2 | 1.4504275 | 1418.00 | 1421.19 | 21.5306 | -0.0558352 | -0.1053311 | -1.3598893 | 0.27480 |
| 8.7 | 1.3947029 | 1420.28 | 1423.48 | 21.5155 | -0.0558328 | -0.1053266 | -1.3618411 | 0.27480 |
| 13.2 | 1.3390598 | 1425.08 | 1428.28 | 21.4837 | -0.0558299 | -0.1053210 | -1.3637451 | 0.27480 |
| 17.7 | 1.2834979 | 1429.80 | 1433.01 | 21.4526 | -0.0558257 | -0.1053132 | -1.3655809 | 0.27480 |
| 22.2 | 1.2280151 | 1434.42 | 1437.65 | 21.4221 | -0.0558218 | -0.1053058 | -1.3673795 | 0.27480 |
| 26.7 | 1.1726090 | 1438.95 | 1442.18 | 21.3925 | -0.0558194 | -0.1053012 | -1.3692202 | 0.27480 |
| 31.2 | 1.1172799 | 1443.49 | 1446.73 | 21.3628 | -0.0558186 | -0.1052998 | -1.3711141 | 0.27480 |

| | | | | | | | | |
|---|---|---|---|---|---|---|---|---|
| 35.7 | 1.0620281 | 1448.05 | 1451.31 | 21.3330 | -0.0558193 | -0.1053011 | -1.3730557 | 0.27480 |
| 40.2 | 1.0068516 | 1452.65 | 1455.91 | 21.3031 | -0.0558208 | -0.1053038 | -1.3750301 | 0.27480 |
| 48.2 | 0.9089397 | 1457.28 | 1460.55 | 21.2730 | -0.0558223 | -0.1053068 | -1.3785354 | 0.27480 |
| 56.2 | 0.8112724 | 1465.56 | 1468.85 | 21.2195 | -0.0558251 | -0.1053119 | -1.3821188 | 0.27480 |
| 64.2 | 0.7138515 | 1473.95 | 1477.26 | 21.1656 | -0.0558273 | -0.1053161 | -1.3857405 | 0.27480 |
| 76.2 | 0.5681267 | 1482.47 | 1485.79 | 21.1111 | -0.0558289 | -0.1053191 | -1.3911955 | 0.27480 |
| 88.2 | 0.4229682 | 1495.40 | 1498.75 | 21.0289 | -0.0558308 | -0.1053228 | -1.3967807 | 0.27480 |
| 100.2 | 0.2783867 | 1508.62 | 1512.00 | 20.9455 | -0.0558322 | -0.1053253 | -1.4024782 | 0.27480 |
| 112.2 | 0.1344000 | 1522.14 | 1525.55 | 20.8609 | -0.0558330 | -0.1053269 | -1.4082969 | 0.27480 |
| 124.2 | 0.0000000 | 1535.98 | 1539.42 | 20.7751 | -0.0558335 | -0.1053279 | -1.3579176 | 0.27480 |

calculated fluid conditions at time = 0.0000 seconds pressure = 0.0 psia
channel 3
assembly 2

| distance (in.) | delta-p (psi) | enthalpy (btu/lb) | temperature (deg-f) | density (lb/cu-ft) | flow (lb/sec) | mass flux (mlb/hr-ft2) | velocity (ft/sec) | area (sq-in) |
|---|---|---|---|---|---|---|---|---|
| 0.0 | 1.5025628 | 1415.97 | 1419.15 | 21.5441 | -0.0558367 | -0.1053338 | -1.3580028 | 0.27480 |
| 2.1 | 1.4764770 | 1415.70 | 1418.88 | 21.5459 | -0.0558364 | -0.1053333 | -1.3589487 | 0.27480 |
| 4.2 | 1.4504275 | 1417.97 | 1421.16 | 21.5308 | -0.0558358 | -0.1053322 | -1.3598899 | 0.27480 |
| 8.7 | 1.3947029 | 1420.25 | 1423.44 | 21.5157 | -0.0558339 | -0.1053285 | -1.3618531 | 0.27480 |
| 13.2 | 1.3390598 | 1425.05 | 1428.25 | 21.4839 | -0.0558321 | -0.1053252 | -1.3637876 | 0.27480 |
| 17.7 | 1.2834979 | 1429.77 | 1432.98 | 21.4528 | -0.0558304 | -0.1053219 | -1.3656839 | 0.27480 |
| 22.2 | 1.2280151 | 1434.40 | 1437.62 | 21.4223 | -0.0558290 | -0.1053193 | -1.3675453 | 0.27480 |
| 26.7 | 1.1726090 | 1438.93 | 1442.16 | 21.3926 | -0.0558281 | -0.1053176 | -1.3694266 | 0.27480 |
| 31.2 | 1.1172799 | 1443.47 | 1446.71 | 21.3629 | -0.0558278 | -0.1053170 | -1.3713319 | 0.27480 |
| 35.7 | 1.0620281 | 1448.04 | 1451.29 | 21.3331 | -0.0558279 | -0.1053173 | -1.3732623 | 0.27480 |
| 40.2 | 1.0068516 | 1452.64 | 1455.90 | 21.3031 | -0.0558284 | -0.1053183 | -1.3752150 | 0.27480 |
| 48.2 | 0.9089397 | 1457.27 | 1460.54 | 21.2731 | -0.0558290 | -0.1053194 | -1.3786978 | 0.27480 |
| 56.2 | 0.8112724 | 1465.55 | 1468.84 | 21.2196 | -0.0558301 | -0.1053215 | -1.3822413 | 0.27480 |
| 64.2 | 0.7138515 | 1473.95 | 1477.25 | 21.1656 | -0.0558310 | -0.1053232 | -1.3858309 | 0.27480 |
| 76.2 | 0.5681267 | 1482.46 | 1485.79 | 21.1111 | -0.0558317 | -0.1053244 | -1.3912641 | 0.27480 |
| 88.2 | 0.4229682 | 1495.39 | 1498.75 | 21.0289 | -0.0558325 | -0.1053259 | -1.3968217 | 0.27480 |
| 100.2 | 0.2783867 | 1508.62 | 1512.00 | 20.9456 | -0.0558330 | -0.1053270 | -1.4025000 | 0.27480 |
| 112.2 | 0.1344000 | 1522.14 | 1525.55 | 20.8610 | -0.0558334 | -0.1053276 | -1.4083061 | 0.27480 |
| 124.2 | 0.0000000 | 1535.98 | 1539.42 | 20.7751 | -0.0558336 | -0.1053280 | -1.3579194 | 0.27480 |

calculated fluid conditions at time = 0.0000 seconds pressure = 0.0 psia
channel 4
assembly 2

| distance (in.) | delta-p (psi) | enthalpy (btu/lb) | temperature (deg-f) | density (lb/cu-ft) | flow (lb/sec) | mass flux (mlb/hr-ft2) | velocity (ft/sec) | area (sq-in) |
|---|---|---|---|---|---|---|---|---|
| 0.0 | 1.5025628 | 1415.97 | 1419.15 | 21.5441 | -0.0558391 | -0.1053384 | -1.3580458 | 0.27480 |
| 2.1 | 1.4764769 | 1415.66 | 1418.84 | 21.5462 | -0.0558393 | -0.1053388 | -1.3590019 | 0.27480 |
| 4.2 | 1.4504275 | 1417.93 | 1421.12 | 21.5311 | -0.0558367 | -0.1053339 | -1.3598953 | 0.27480 |
| 8.7 | 1.3947029 | 1420.21 | 1423.40 | 21.5159 | -0.0558365 | -0.1053334 | -1.3618994 | 0.27480 |
| 13.2 | 1.3390597 | 1425.01 | 1428.21 | 21.4842 | -0.0558367 | -0.1053338 | -1.3638830 | 0.27480 |
| 17.7 | 1.2834979 | 1429.73 | 1432.95 | 21.4530 | -0.0558378 | -0.1053359 | -1.3658507 | 0.27480 |
| 22.2 | 1.2280151 | 1434.36 | 1437.59 | 21.4225 | -0.0558390 | -0.1053383 | -1.3677802 | 0.27480 |
| 26.7 | 1.1726090 | 1438.90 | 1442.13 | 21.3928 | -0.0558398 | -0.1053396 | -1.3697032 | 0.27480 |
| 31.2 | 1.1172799 | 1443.45 | 1446.69 | 21.3630 | -0.0558398 | -0.1053397 | -1.3716189 | 0.27480 |
| 35.7 | 1.0620281 | 1448.02 | 1451.27 | 21.3332 | -0.0558393 | -0.1053387 | -1.3735339 | 0.27480 |
| 40.2 | 1.0068516 | 1452.62 | 1455.88 | 21.3033 | -0.0558386 | -0.1053374 | -1.3754582 | 0.27480 |
| 48.2 | 0.9089397 | 1457.25 | 1460.53 | 21.2732 | -0.0558379 | -0.1053361 | -1.3789120 | 0.27480 |
| 56.2 | 0.8112724 | 1465.54 | 1468.83 | 21.2197 | -0.0558368 | -0.1053340 | -1.3824026 | 0.27480 |
| 64.2 | 0.7138515 | 1473.94 | 1477.25 | 21.1657 | -0.0558359 | -0.1053324 | -1.3859500 | 0.27480 |
| 76.2 | 0.5681267 | 1482.46 | 1485.78 | 21.1112 | -0.0558354 | -0.1053314 | -1.3913545 | 0.27480 |
| 88.2 | 0.4229682 | 1495.39 | 1498.74 | 21.0289 | -0.0558347 | -0.1053301 | -1.3968760 | 0.27480 |
| 100.2 | 0.2783867 | 1508.61 | 1512.00 | 20.9456 | -0.0558342 | -0.1053292 | -1.4025291 | 0.27480 |
| 112.2 | 0.1344000 | 1522.14 | 1525.55 | 20.8610 | -0.0558339 | -0.1053286 | -1.4083186 | 0.27480 |
| 124.2 | 0.0000000 | 1535.98 | 1539.42 | 20.7751 | -0.0558337 | -0.1053282 | -1.3579218 | 0.27480 |

calculated fluid conditions at time = 0.0000 seconds pressure = 0.0 psia
channel 5
assembly 2

| distance (in.) | delta-p (psi) | enthalpy (btu/lb) | temperature (deg-f) | density (lb/cu-ft) | flow (lb/sec) | mass flux (mlb/hr-ft2) | velocity (ft/sec) | area (sq-in) |
|---|---|---|---|---|---|---|---|---|
| 0.0 | 1.5025628 | 1415.97 | 1419.15 | 21.5441 | -0.0558353 | -0.1053312 | -1.3579395 | 0.27480 |
| 2.1 | 1.4764768 | 1415.62 | 1418.81 | 21.5464 | -0.0558359 | -0.1053323 | -1.3589054 | 0.27480 |
| 4.2 | 1.4504275 | 1417.89 | 1421.08 | 21.5313 | -0.0558328 | -0.1053266 | -1.3597868 | 0.27480 |

| | | | | | | | | |
|---|---|---|---|---|---|---|---|---|
| 8.7 | 1.3947029 | 1420.18 | 1423.37 | 21.5162 | -0.0558348 | -0.1053303 | -1.3618466 | 0.27480 |
| 13.2 | 1.3390597 | 1424.98 | 1428.18 | 21.4844 | -0.0558375 | -0.1053354 | -1.3638915 | 0.27480 |
| 17.7 | 1.2834979 | 1429.70 | 1432.92 | 21.4532 | -0.0558416 | -0.1053430 | -1.3659322 | 0.27480 |
| 22.2 | 1.2280151 | 1434.34 | 1437.56 | 21.4227 | -0.0558454 | -0.1053503 | -1.3679273 | 0.27480 |
| 26.7 | 1.1726090 | 1438.88 | 1442.11 | 21.3929 | -0.0558478 | -0.1053548 | -1.3698929 | 0.27480 |
| 31.2 | 1.1172799 | 1443.43 | 1446.67 | 21.3631 | -0.0558484 | -0.1053560 | -1.3718255 | 0.27480 |
| 35.7 | 1.0620281 | 1448.00 | 1451.26 | 21.3333 | -0.0558477 | -0.1053546 | -1.3737363 | 0.27480 |
| 40.2 | 1.0068516 | 1452.61 | 1455.87 | 21.3033 | -0.0558462 | -0.1053518 | -1.3756431 | 0.27480 |
| 48.2 | 0.9089397 | 1457.24 | 1460.52 | 21.2733 | -0.0558446 | -0.1053489 | -1.3790753 | 0.27480 |
| 56.2 | 0.8112724 | 1465.53 | 1468.82 | 21.2197 | -0.0558419 | -0.1053437 | -1.3825269 | 0.27480 |
| 64.2 | 0.7138515 | 1473.93 | 1477.24 | 21.1657 | -0.0558397 | -0.1053396 | -1.3860419 | 0.27480 |
| 76.2 | 0.5681267 | 1482.45 | 1485.78 | 21.1112 | -0.0558382 | -0.1053367 | -1.3914233 | 0.27480 |
| 88.2 | 0.4229682 | 1495.39 | 1498.74 | 21.0290 | -0.0558364 | -0.1053332 | -1.3969167 | 0.27480 |
| 100.2 | 0.2783867 | 1508.61 | 1511.99 | 20.9456 | -0.0558351 | -0.1053308 | -1.4025502 | 0.27480 |
| 112.2 | 0.1344000 | 1522.14 | 1525.55 | 20.8610 | -0.0558343 | -0.1053293 | -1.4083272 | 0.27480 |
| 124.2 | 0.0000000 | 1535.98 | 1539.42 | 20.7751 | -0.0558338 | -0.1053283 | -1.3579235 | 0.27480 |

calculated fluid conditions at time = 0.0000 seconds pressure = 0.0 psia

channel 6

assembly 2

| distance (in.) | delta-p (psi) | enthalpy (btu/lb) | temperature (deg-f) | density (lb/cu-ft) | flow (lb/sec) | mass flux (mlb/hr-ft2) | velocity (ft/sec) | area (sq-in) |
|---|---|---|---|---|---|---|---|---|
| 0.0 | 1.5025628 | 1415.97 | 1419.15 | 21.5441 | -0.0558311 | -0.1053233 | -1.3578281 | 0.27480 |
| 2.1 | 1.4764768 | 1415.60 | 1418.78 | 21.5465 | -0.0558320 | -0.1053249 | -1.3588002 | 0.27480 |
| 4.2 | 1.4504275 | 1417.87 | 1421.06 | 21.5314 | -0.0558300 | -0.1053213 | -1.3597091 | 0.27480 |
| 8.7 | 1.3947029 | 1420.15 | 1423.35 | 21.5163 | -0.0558345 | -0.1053296 | -1.3618282 | 0.27480 |
| 13.2 | 1.3390597 | 1424.96 | 1428.16 | 21.4845 | -0.0558394 | -0.1053389 | -1.3639283 | 0.27480 |
| 17.7 | 1.2834979 | 1429.68 | 1432.90 | 21.4533 | -0.0558455 | -0.1053505 | -1.3660224 | 0.27480 |
| 22.2 | 1.2280151 | 1434.32 | 1437.54 | 21.4228 | -0.0558512 | -0.1053611 | -1.3680619 | 0.27480 |
| 26.7 | 1.1726090 | 1438.86 | 1442.09 | 21.3930 | -0.0558547 | -0.1053678 | -1.3700566 | 0.27480 |
| 31.2 | 1.1172799 | 1443.42 | 1446.66 | 21.3632 | -0.0558558 | -0.1053700 | -1.3720029 | 0.27480 |
| 35.7 | 1.0620281 | 1447.99 | 1451.25 | 21.3334 | -0.0558550 | -0.1053684 | -1.3739120 | 0.27480 |
| 40.2 | 1.0068516 | 1452.60 | 1455.86 | 21.3034 | -0.0558530 | -0.1053646 | -1.3758060 | 0.27480 |
| 48.2 | 0.9089397 | 1457.24 | 1460.51 | 21.2733 | -0.0558507 | -0.1053603 | -1.3792230 | 0.27480 |
| 56.2 | 0.8112724 | 1465.52 | 1468.82 | 21.2197 | -0.0558468 | -0.1053529 | -1.3826462 | 0.27480 |
| 64.2 | 0.7138515 | 1473.93 | 1477.24 | 21.1657 | -0.0558435 | -0.1053466 | -1.3861334 | 0.27480 |

| | | | | | | | | |
|---|---|---|---|---|---|---|---|---|
| 76.2 | 0.5681267 | 1482.45 | 1485.77 | 21.1112 | -0.0558410 | -0.1053419 | -1.3914909 | 0.27480 |
| 88.2 | 0.4229682 | 1495.39 | 1498.74 | 21.0290 | -0.0558380 | -0.1053363 | -1.3969563 | 0.27480 |
| 100.2 | 0.2783867 | 1508.61 | 1511.99 | 20.9456 | -0.0558359 | -0.1053323 | -1.4025695 | 0.27480 |
| 112.2 | 0.1344000 | 1522.14 | 1525.55 | 20.8610 | -0.0558345 | -0.1053298 | -1.4083340 | 0.27480 |
| 124.2 | 0.0000000 | 1535.98 | 1539.42 | 20.7751 | -0.0558338 | -0.1053284 | -1.3579247 | 0.27480 |

slab temperature summary time = 0.0000 seconds
(assembly no. - channel no.)

| axial zone (inches) | ( 1) | ( 2) | ( 3) | ( 4) | ( 5) | ( 6) | ( 7) | ( 8) | ( 9) | ( 10) |
|---|---|---|---|---|---|---|---|---|---|---|
| 0.0 - 2.1 | 1419.15 | 1419.15 | 1419.15 | 1419.15 | 1419.15 | 1419.15 | 1418.93 | 1418.91 | 1418.88 | 1418.84 |
| 2.1 - 4.2 | 1419.19 | 1419.19 | 1419.19 | 1419.19 | 1419.19 | 1419.19 | 1421.19 | 1421.17 | 1421.14 | 1421.10 |
| 4.2 - 8.7 | 1449.25 | 1449.01 | 1448.60 | 1447.95 | 1447.54 | 1447.14 | 1423.71 | 1423.69 | 1423.66 | 1423.61 |
| 8.7 - 13.2 | 1481.92 | 1481.45 | 1480.69 | 1479.50 | 1478.71 | 1478.00 | 1428.77 | 1428.75 | 1428.71 | 1428.66 |
| 13.2 - 17.7 | 1515.84 | 1515.18 | 1514.16 | 1512.55 | 1511.47 | 1510.54 | 1433.77 | 1433.75 | 1433.71 | 1433.66 |
| 17.7 - 22.2 | 1550.25 | 1549.47 | 1548.28 | 1546.41 | 1545.16 | 1544.09 | 1438.70 | 1438.68 | 1438.64 | 1438.59 |
| 22.2 - 26.7 | 1554.23 | 1553.52 | 1552.47 | 1550.87 | 1549.78 | 1548.91 | 1443.23 | 1443.21 | 1443.18 | 1443.14 |
| 26.7 - 31.2 | 1556.04 | 1555.41 | 1554.51 | 1553.15 | 1552.22 | 1551.50 | 1447.76 | 1447.74 | 1447.71 | 1447.68 |
| 31.2 - 35.7 | 1556.73 | 1556.18 | 1555.41 | 1554.25 | 1553.47 | 1552.87 | 1452.30 | 1452.28 | 1452.26 | 1452.23 |
| 35.7 - 40.2 | 1556.85 | 1556.37 | 1555.71 | 1554.73 | 1554.07 | 1553.57 | 1456.86 | 1456.85 | 1456.83 | 1456.80 |
| 40.2 - 48.2 | 1556.49 | 1556.11 | 1555.61 | 1554.85 | 1554.36 | 1553.99 | 1461.46 | 1461.45 | 1461.43 | 1461.41 |
| 48.2 - 56.2 | 1555.97 | 1555.67 | 1555.28 | 1554.70 | 1554.34 | 1554.06 | 1469.67 | 1469.66 | 1469.65 | 1469.64 |
| 56.2 - 64.2 | 1555.44 | 1555.20 | 1554.90 | 1554.45 | 1554.18 | 1553.96 | 1478.00 | 1478.00 | 1477.99 | 1477.97 |
| 64.2 - 76.2 | 1554.68 | 1554.52 | 1554.30 | 1553.99 | 1553.79 | 1553.65 | 1486.45 | 1486.44 | 1486.44 | 1486.43 |
| 76.2 - 88.2 | 1554.13 | 1554.01 | 1553.86 | 1553.64 | 1553.50 | 1553.40 | 1499.28 | 1499.28 | 1499.27 | 1499.27 |
| 88.2 -100.2 | 1553.76 | 1553.68 | 1553.57 | 1553.41 | 1553.32 | 1553.24 | 1512.40 | 1512.40 | 1512.40 | 1512.39 |
| 100.2 -112.2 | 1553.56 | 1553.50 | 1553.43 | 1553.32 | 1553.25 | 1553.20 | 1525.82 | 1525.82 | 1525.82 | 1525.82 |
| 112.2 -124.2 | 1553.53 | 1553.49 | 1553.44 | 1553.37 | 1553.32 | 1553.28 | 1539.56 | 1539.56 | 1539.56 | 1539.56 |

slab temperature summary time = 0.0000 seconds

(assembly no. - channel no.)

| axial zone (inches) | ( 11) | ( 12) | ( 13) | ( 14) | ( 15) | ( 16) | ( 17) | ( 18) | ( 19) | ( 20) |
|---|---|---|---|---|---|---|---|---|---|---|
| 0.0 - 2.1 | 1418.81 | 1418.79 | 1409.87 | 1409.85 | 1409.82 | 1409.78 | 1409.75 | 1409.73 | 700.92 | 700.92 |
| 2.1 - 4.2 | 1421.07 | 1421.04 | 1412.13 | 1412.11 | 1412.08 | 1412.04 | 1412.01 | 1411.99 | 702.98 | 702.98 |
| 4.2 - 8.7 | 1423.57 | 1423.55 | 1414.42 | 1414.40 | 1414.37 | 1414.33 | 1414.29 | 1414.27 | 706.18 | 706.18 |
| 8.7 - 13.2 | 1428.62 | 1428.59 | 1419.19 | 1419.18 | 1419.15 | 1419.11 | 1419.07 | 1419.05 | 710.61 | 710.61 |
| 13.2 - 17.7 | 1433.62 | 1433.59 | 1423.89 | 1423.87 | 1423.85 | 1423.81 | 1423.78 | 1423.76 | 715.03 | 715.03 |
| 17.7 - 22.2 | 1438.55 | 1438.52 | 1428.50 | 1428.48 | 1428.46 | 1428.42 | 1428.40 | 1428.38 | 719.46 | 719.46 |
| 22.2 - 26.7 | 1443.10 | 1443.08 | 1433.00 | 1432.99 | 1432.97 | 1432.94 | 1432.92 | 1432.90 | 723.87 | 723.87 |
| 26.7 - 31.2 | 1447.65 | 1447.63 | 1437.52 | 1437.51 | 1437.49 | 1437.47 | 1437.45 | 1437.44 | 728.29 | 728.29 |
| 31.2 - 35.7 | 1452.21 | 1452.19 | 1442.07 | 1442.06 | 1442.04 | 1442.02 | 1442.01 | 1442.00 | 732.71 | 732.71 |
| 35.7 - 40.2 | 1456.79 | 1456.77 | 1446.64 | 1446.63 | 1446.62 | 1446.60 | 1446.59 | 1446.58 | 737.14 | 737.14 |
| 40.2 - 48.2 | 1461.39 | 1461.38 | 1451.27 | 1451.27 | 1451.25 | 1451.24 | 1451.23 | 1451.22 | 743.21 | 743.21 |
| 48.2 - 56.2 | 1469.62 | 1469.62 | 1459.51 | 1459.51 | 1459.50 | 1459.49 | 1459.48 | 1459.48 | 751.08 | 751.08 |
| 56.2 - 64.2 | 1477.97 | 1477.96 | 1467.87 | 1467.86 | 1467.86 | 1467.85 | 1467.84 | 1467.84 | 758.95 | 758.95 |
| 64.2 - 76.2 | 1486.42 | 1486.42 | 1476.37 | 1476.36 | 1476.36 | 1476.35 | 1476.35 | 1476.35 | 768.72 | 768.72 |
| 76.2 - 88.2 | 1499.26 | 1499.26 | 1489.23 | 1489.23 | 1489.23 | 1489.22 | 1489.22 | 1489.22 | 780.55 | 780.55 |
| 88.2 -100.2 | 1512.39 | 1512.39 | 1502.39 | 1502.38 | 1502.38 | 1502.38 | 1502.38 | 1502.38 | 792.39 | 792.39 |
| 100.2 -112.2 | 1525.82 | 1525.82 | 1515.83 | 1515.83 | 1515.83 | 1515.83 | 1515.83 | 1515.83 | 804.25 | 804.25 |
| 112.2 -124.2 | 1539.56 | 1539.55 | 1529.58 | 1529.58 | 1529.58 | 1529.58 | 1529.58 | 1529.58 | 816.12 | 816.12 |

slab temperature summary time = 0.0000 seconds
(assembly no. - channel no.)

| axial zone (inches) | ( 21) | ( 22) | ( 23) | ( 24) | ( 25) | ( 26) | ( 27) | ( 28) | ( 29) | ( 30) |
|---|---|---|---|---|---|---|---|---|---|---|
| 0.0 - 2.1 | 700.92 | 700.92 | 700.92 | 700.91 | 687.22 | 687.22 | 687.22 | 687.22 | 687.22 | 687.22 |
| 2.1 - 4.2 | 702.98 | 702.98 | 702.98 | 702.97 | 689.26 | 689.26 | 689.26 | 689.26 | 689.26 | 689.26 |
| 4.2 - 8.7 | 706.18 | 706.18 | 706.18 | 706.18 | 692.45 | 692.45 | 692.45 | 692.45 | 692.45 | 692.45 |
| 8.7 - 13.2 | 710.61 | 710.61 | 710.61 | 710.60 | 696.82 | 696.82 | 696.82 | 696.82 | 696.82 | 696.82 |

| | | | | | | | | | | |
|---|---|---|---|---|---|---|---|---|---|---|
| 13.2 - 17.7 | 715.03 | 715.03 | 715.03 | 715.03 | 701.20 | 701.20 | 701.19 | 701.19 | 701.19 | 701.19 |
| 17.7 - 22.2 | 719.45 | 719.45 | 719.45 | 719.45 | 705.57 | 705.57 | 705.57 | 705.57 | 705.57 | 705.56 |
| 22.2 - 26.7 | 723.87 | 723.87 | 723.87 | 723.87 | 709.94 | 709.94 | 709.94 | 709.94 | 709.93 | 709.93 |
| 26.7 - 31.2 | 728.29 | 728.29 | 728.29 | 728.29 | 714.31 | 714.31 | 714.31 | 714.31 | 714.31 | 714.31 |
| 31.2 - 35.7 | 732.71 | 732.71 | 732.71 | 732.71 | 718.68 | 718.68 | 718.68 | 718.68 | 718.68 | 718.68 |
| 35.7 - 40.2 | 737.14 | 737.13 | 737.13 | 737.13 | 723.05 | 723.05 | 723.05 | 723.05 | 723.05 | 723.05 |
| 40.2 - 48.2 | 743.21 | 743.21 | 743.21 | 743.21 | 729.10 | 729.10 | 729.10 | 729.10 | 729.10 | 729.10 |
| 48.2 - 56.2 | 751.08 | 751.08 | 751.08 | 751.08 | 736.87 | 736.87 | 736.87 | 736.87 | 736.87 | 736.87 |
| 56.2 - 64.2 | 758.95 | 758.95 | 758.95 | 758.95 | 744.65 | 744.65 | 744.65 | 744.64 | 744.64 | 744.64 |
| 64.2 - 76.2 | 768.72 | 768.72 | 768.72 | 768.72 | 754.34 | 754.34 | 754.34 | 754.34 | 754.34 | 754.34 |
| 76.2 - 88.2 | 780.55 | 780.55 | 780.55 | 780.55 | 766.01 | 766.01 | 766.01 | 766.01 | 766.01 | 766.01 |
| 88.2 -100.2 | 792.39 | 792.39 | 792.39 | 792.39 | 777.68 | 777.68 | 777.68 | 777.68 | 777.68 | 777.68 |
| 100.2 -112.2 | 804.25 | 804.25 | 804.25 | 804.25 | 789.35 | 789.35 | 789.35 | 789.35 | 789.35 | 789.35 |
| 112.2 -124.2 | 816.12 | 816.12 | 816.12 | 816.12 | 801.04 | 801.04 | 801.04 | 801.04 | 801.04 | 801.04 |

crossflow between adjacent channels at time = 0.0000 seconds

| assembly number | 1 | 1 | 1 | 1 | 1 | 1 | 1 | 1 | 1 | 1 |
|---|---|---|---|---|---|---|---|---|---|---|
| axial zone | 1 2 | 1 10 | 2 3 | 3 4 | 3 11 | 4 5 | 5 6 | 5 13 | 6 7 | 7 8 |
| 0.0 - 2.1 | 0.00000 | 0.00000 | 0.00000 | 0.00000 | 0.00000 | 0.00000 | 0.00000 | 0.00000 | 0.00000 | 0.00000 |
| 2.1 - 4.2 | -0.00047 | 0.00004 | -0.00026 | -0.00029 | 0.00037 | 0.00014 | 0.00014 | 0.00040 | 0.00052 | 0.00045 |
| 4.2 - 8.7 | 0.00113 | -0.00007 | 0.00059 | 0.00063 | -0.00078 | -0.00023 | -0.00024 | -0.00083 | -0.00103 | -0.00092 |
| 8.7 - 13.2 | 0.00142 | -0.00013 | 0.00074 | 0.00083 | -0.00110 | -0.00044 | -0.00044 | -0.00120 | -0.00159 | -0.00139 |
| 13.2 - 17.7 | 0.00144 | -0.00018 | 0.00073 | 0.00084 | -0.00121 | -0.00058 | -0.00058 | -0.00134 | -0.00185 | -0.00159 |
| 17.7 - 22.2 | 0.00142 | -0.00022 | 0.00068 | 0.00079 | -0.00123 | -0.00066 | -0.00066 | -0.00136 | -0.00194 | -0.00167 |
| 22.2 - 26.7 | 0.00076 | -0.00019 | 0.00032 | 0.00041 | -0.00079 | -0.00055 | -0.00055 | -0.00088 | -0.00137 | -0.00115 |
| 26.7 - 31.2 | 0.00039 | -0.00016 | 0.00012 | 0.00018 | -0.00050 | -0.00044 | -0.00045 | -0.00056 | -0.00095 | -0.00079 |
| 31.2 - 35.7 | 0.00071 | -0.00018 | 0.00003 | -0.00052 | -0.00045 | -0.00048 | -0.00048 | 0.00008 | -0.00036 | -0.00075 |
| 35.7 - 40.2 | 0.00151 | -0.00021 | -0.00002 | -0.00154 | -0.00049 | -0.00060 | -0.00052 | 0.00089 | 0.00048 | -0.00087 |
| 40.2 - 48.2 | 0.00128 | -0.00024 | -0.00012 | -0.00150 | -0.00046 | -0.00063 | -0.00057 | 0.00085 | 0.00036 | -0.00085 |
| 48.2 - 56.2 | 0.00060 | -0.00013 | -0.00011 | -0.00080 | -0.00017 | -0.00035 | -0.00035 | 0.00047 | 0.00013 | -0.00046 |
| 56.2 - 64.2 | 0.00013 | -0.00003 | -0.00006 | -0.00027 | 0.00003 | -0.00012 | -0.00016 | 0.00021 | 0.00000 | -0.00007 |
| 64.2 - 76.2 | 0.00017 | 0.00000 | -0.00001 | -0.00027 | 0.00009 | -0.00005 | -0.00008 | 0.00025 | 0.00014 | 0.00004 |
| 76.2 - 88.2 | 0.00018 | 0.00001 | 0.00003 | -0.00023 | 0.00013 | -0.00001 | -0.00003 | 0.00025 | 0.00019 | 0.00011 |
| 88.2 - 100.2 | 0.00020 | -0.00001 | 0.00008 | -0.00020 | 0.00018 | 0.00002 | 0.00000 | 0.00024 | 0.00022 | 0.00017 |
| 100.2 - 112.2 | 0.00022 | -0.00004 | 0.00013 | -0.00018 | 0.00023 | 0.00004 | 0.00003 | 0.00024 | 0.00024 | 0.00023 |

| | | | | | | | | | | |
|---|---|---|---|---|---|---|---|---|---|---|
| 112.2 - 124.2 | 0.00026 | -0.00008 | 0.00015 | -0.00019 | 0.00026 | 0.00004 | 0.00002 | 0.00024 | 0.00024 | 0.00026 |

crossflow between adjacent channels at time = 0.0000 seconds

| assembly number | 1 | 1 | 1 | 1 | 1 | 1 | 1 | 1 | 1 | 1 |
|---|---|---|---|---|---|---|---|---|---|---|
| axial zone | 7 15 | 8 9 | 9 16 | 10 11 | 10 17 | 11 12 | 12 13 | 12 17 | 13 14 | 14 15 |
| 0.0 - 2.1 | 0.00000 | 0.00000 | 0.00000 | 0.00000 | 0.00000 | 0.00000 | 0.00000 | 0.00000 | 0.00000 | 0.00000 |
| 2.1 - 4.2 | 0.00033 | 0.00056 | -0.00004 | -0.00044 | 0.00003 | 0.00012 | -0.00024 | 0.00053 | 0.00047 | 0.00012 |
| 4.2 - 8.7 | -0.00072 | -0.00131 | 0.00008 | 0.00109 | -0.00005 | -0.00021 | 0.00055 | -0.00126 | -0.00095 | -0.00022 |
| 8.7 - 13.2 | -0.00100 | -0.00178 | 0.00015 | 0.00134 | -0.00010 | -0.00040 | 0.00068 | -0.00166 | -0.00142 | -0.00041 |
| 13.2 - 17.7 | -0.00109 | -0.00193 | 0.00020 | 0.00133 | -0.00015 | -0.00055 | 0.00066 | -0.00178 | -0.00164 | -0.00056 |
| 17.7 - 22.2 | -0.00109 | -0.00198 | 0.00024 | 0.00128 | -0.00018 | -0.00064 | 0.00060 | -0.00181 | -0.00173 | -0.00065 |
| 22.2 - 26.7 | -0.00067 | -0.00124 | 0.00021 | 0.00064 | -0.00015 | -0.00054 | 0.00026 | -0.00110 | -0.00120 | -0.00055 |
| 26.7 - 31.2 | -0.00041 | -0.00078 | 0.00017 | 0.00030 | -0.00013 | -0.00045 | 0.00007 | -0.00067 | -0.00084 | -0.00045 |
| 31.2 - 35.7 | -0.00033 | -0.00109 | 0.00019 | 0.00060 | -0.00014 | -0.00049 | -0.00003 | -0.00100 | -0.00081 | -0.00050 |
| 35.7 - 40.2 | -0.00031 | -0.00195 | 0.00024 | 0.00139 | -0.00018 | -0.00058 | -0.00007 | -0.00187 | -0.00100 | -0.00065 |
| 40.2 - 48.2 | -0.00024 | -0.00172 | 0.00026 | 0.00113 | -0.00021 | -0.00067 | -0.00020 | -0.00166 | -0.00098 | -0.00072 |
| 48.2 - 56.2 | -0.00014 | -0.00084 | 0.00013 | 0.00048 | -0.00006 | -0.00037 | -0.00012 | -0.00084 | -0.00041 | -0.00037 |
| 56.2 - 64.2 | -0.00007 | -0.00019 | 0.00002 | 0.00003 | 0.00006 | -0.00013 | -0.00003 | -0.00025 | 0.00001 | -0.00010 |
| 64.2 - 76.2 | -0.00006 | -0.00016 | -0.00001 | 0.00008 | 0.00009 | -0.00005 | 0.00005 | -0.00026 | 0.00014 | -0.00002 |
| 76.2 - 88.2 | -0.00006 | -0.00012 | -0.00002 | 0.00008 | 0.00011 | 0.00002 | 0.00012 | -0.00024 | 0.00023 | 0.00004 |
| 88.2 - 100.2 | -0.00008 | -0.00006 | -0.00002 | 0.00008 | 0.00009 | 0.00008 | 0.00020 | -0.00024 | 0.00034 | 0.00010 |
| 100.2 - 112.2 | -0.00010 | 0.00001 | 0.00000 | 0.00007 | 0.00006 | 0.00015 | 0.00029 | -0.00025 | 0.00045 | 0.00017 |
| 112.2 - 124.2 | -0.00013 | 0.00007 | 0.00005 | 0.00007 | 0.00001 | 0.00020 | 0.00035 | -0.00028 | 0.00051 | 0.00022 |

crossflow between adjacent channels at time = 0.0000 seconds

| assembly number | 1 | 1 | 1 | 1 | 2 | 2 | 2 | 2 | 2 |
|---|---|---|---|---|---|---|---|---|---|
| axial zone | 14 18 | 15 16 | 16 18 | 17 18 | 1 2 | 2 3 | 3 4 | 4 5 | 5 6 |
| 0.0 - 2.1 | 0.00000 | 0.00000 | 0.00000 | 0.00000 | 0.00005 | 0.00008 | 0.00009 | 0.00007 | 0.00004 |
| 2.1 - 4.2 | 0.00049 | 0.00058 | -0.00003 | 0.00008 | 0.00003 | 0.00005 | 0.00004 | 0.00003 | 0.00001 |
| 4.2 - 8.7 | -0.00118 | -0.00135 | 0.00005 | -0.00014 | 0.00000 | -0.00001 | -0.00002 | -0.00002 | -0.00001 |
| 8.7 - 13.2 | -0.00151 | -0.00185 | 0.00011 | -0.00028 | -0.00001 | -0.00002 | -0.00002 | -0.00002 | -0.00001 |
| 13.2 - 17.7 | -0.00156 | -0.00203 | 0.00015 | -0.00039 | -0.00001 | -0.00003 | -0.00003 | -0.00003 | -0.00002 |

| | | | | | | | | | |
|---|---|---|---|---|---|---|---|---|---|
| 17.7 - 22.2 | -0.00155 | -0.00211 | 0.00018 | -0.00046 | -0.00001 | -0.00002 | -0.00003 | -0.00003 | -0.00001 |
| 22.2 - 26.7 | -0.00088 | -0.00135 | 0.00016 | -0.00040 | -0.00001 | -0.00002 | -0.00002 | -0.00002 | -0.00001 |
| 26.7 - 31.2 | -0.00049 | -0.00087 | 0.00013 | -0.00033 | 0.00000 | 0.00000 | 0.00000 | 0.00000 | 0.00000 |
| 31.2 - 35.7 | -0.00079 | -0.00120 | 0.00015 | -0.00036 | 0.00000 | 0.00000 | 0.00001 | 0.00000 | 0.00000 |
| 35.7 - 40.2 | -0.00161 | -0.00209 | 0.00020 | -0.00045 | 0.00001 | 0.00001 | 0.00001 | 0.00001 | 0.00001 |
| 40.2 - 48.2 | -0.00135 | -0.00188 | 0.00022 | -0.00050 | 0.00000 | 0.00001 | 0.00001 | 0.00001 | 0.00000 |
| 48.2 - 56.2 | -0.00059 | -0.00096 | 0.00006 | -0.00026 | 0.00001 | 0.00001 | 0.00001 | 0.00001 | 0.00001 |
| 56.2 - 64.2 | -0.00005 | -0.00029 | -0.00007 | -0.00005 | 0.00000 | 0.00001 | 0.00001 | 0.00001 | 0.00001 |
| 64.2 - 76.2 | -0.00007 | -0.00026 | -0.00011 | 0.00001 | 0.00000 | 0.00000 | 0.00000 | 0.00000 | 0.00000 |
| 76.2 - 88.2 | -0.00004 | -0.00021 | -0.00012 | 0.00003 | 0.00000 | 0.00000 | 0.00001 | 0.00000 | 0.00000 |
| 88.2 - 100.2 | 0.00002 | -0.00016 | -0.00010 | 0.00001 | 0.00000 | 0.00000 | 0.00000 | 0.00000 | 0.00000 |
| 100.2 - 112.2 | 0.00007 | -0.00012 | -0.00007 | -0.00005 | 0.00000 | 0.00000 | 0.00000 | 0.00000 | 0.00000 |
| 112.2 - 124.2 | 0.00012 | -0.00009 | -0.00002 | -0.00015 | 0.00000 | 0.00000 | 0.00000 | 0.00000 | 0.00000 |

side boundary temperature summary time = 0.0000 seconds
boundary slab node no. 25

| axial zone (inches) | ( 1) | ( 2) | ( |
|---|---|---|---|
| 0.0 - 2.1 | 687.22 | 681.01 | |
| 2.1 - 4.2 | 689.26 | 683.04 | |
| 4.2 - 8.7 | 692.45 | 686.23 | |
| 8.7 - 13.2 | 696.83 | 690.58 | |
| 13.2 - 17.7 | 701.20 | 694.93 | |
| 17.7 - 22.2 | 705.57 | 699.28 | |
| 22.2 - 26.7 | 709.94 | 703.62 | |
| 26.7 - 31.2 | 714.31 | 707.97 | |
| 31.2 - 35.7 | 718.68 | 712.32 | |
| 35.7 - 40.2 | 723.05 | 716.67 | |
| 40.2 - 48.2 | 729.10 | 722.71 | |
| 48.2 - 56.2 | 736.87 | 730.43 | |
| 56.2 - 64.2 | 744.65 | 738.16 | |
| 64.2 - 76.2 | 754.34 | 747.83 | |
| 76.2 - 88.2 | 766.01 | 759.42 | |

| | | |
|---|---|---|
| 88.2 -100.2 | 777.68 | 771.01 |
| 100.2 -112.2 | 789.35 | 782.61 |
| 112.2 -124.2 | 801.03 | 794.20 |

side boundary temperature summary time = 0.0000 seconds
boundary slab node no. 26

| axial zone (inches) | ( 1) | ( 2) | ( |
|---|---|---|---|
| 0.0 - 2.1 | 687.22 | 681.01 | |
| 2.1 - 4.2 | 689.26 | 683.04 | |
| 4.2 - 8.7 | 692.45 | 686.23 | |
| 8.7 - 13.2 | 696.83 | 690.58 | |
| 13.2 - 17.7 | 701.20 | 694.93 | |
| 17.7 - 22.2 | 705.57 | 699.28 | |
| 22.2 - 26.7 | 709.94 | 703.62 | |
| 26.7 - 31.2 | 714.31 | 707.97 | |
| 31.2 - 35.7 | 718.68 | 712.32 | |
| 35.7 - 40.2 | 723.05 | 716.67 | |
| 40.2 - 48.2 | 729.10 | 722.71 | |
| 48.2 - 56.2 | 736.87 | 730.43 | |
| 56.2 - 64.2 | 744.65 | 738.16 | |
| 64.2 - 76.2 | 754.34 | 747.83 | |
| 76.2 - 88.2 | 766.01 | 759.42 | |
| 88.2 -100.2 | 777.68 | 771.01 | |
| 100.2 -112.2 | 789.35 | 782.61 | |
| 112.2 -124.2 | 801.03 | 794.20 | |

side boundary temperature summary time = 0.0000 seconds
boundary slab node no. 27

| axial zone (inches) | ( 1) | ( 2) | ( |
|---|---|---|---|
| 0.0 - 2.1 | 687.22 | 681.01 | |
| 2.1 - 4.2 | 689.26 | 683.04 | |
| 4.2 - 8.7 | 692.45 | 686.23 | |
| 8.7 - 13.2 | 696.83 | 690.58 | |
| 13.2 - 17.7 | 701.20 | 694.93 | |
| 17.7 - 22.2 | 705.57 | 699.28 | |
| 22.2 - 26.7 | 709.94 | 703.62 | |
| 26.7 - 31.2 | 714.31 | 707.97 | |
| 31.2 - 35.7 | 718.68 | 712.32 | |
| 35.7 - 40.2 | 723.05 | 716.67 | |
| 40.2 - 48.2 | 729.10 | 722.71 | |
| 48.2 - 56.2 | 736.87 | 730.43 | |
| 56.2 - 64.2 | 744.65 | 738.16 | |
| 64.2 - 76.2 | 754.34 | 747.83 | |
| 76.2 - 88.2 | 766.01 | 759.42 | |
| 88.2 -100.2 | 777.68 | 771.01 | |
| 100.2 -112.2 | 789.35 | 782.61 | |
| 112.2 -124.2 | 801.03 | 794.20 | |

side boundary temperature summary time = 0.0000 seconds
boundary slab node no. 28

| axial zone (inches) | ( 1) | ( 2) | ( |
|---|---|---|---|
| 0.0 - 2.1 | 687.22 | 681.01 | |
| 2.1 - 4.2 | 689.26 | 683.04 | |
| 4.2 - 8.7 | 692.45 | 686.23 | |
| 8.7 - 13.2 | 696.82 | 690.58 | |
| 13.2 - 17.7 | 701.20 | 694.93 | |
| 17.7 - 22.2 | 705.57 | 699.28 | |

| | | |
|---|---|---|
| 22.2 - 26.7 | 709.94 | 703.62 |
| 26.7 - 31.2 | 714.31 | 707.97 |
| 31.2 - 35.7 | 718.68 | 712.32 |
| 35.7 - 40.2 | 723.05 | 716.67 |
| 40.2 - 48.2 | 729.10 | 722.71 |
| 48.2 - 56.2 | 736.87 | 730.43 |
| 56.2 - 64.2 | 744.65 | 738.16 |
| 64.2 - 76.2 | 754.34 | 747.83 |
| 76.2 - 88.2 | 766.01 | 759.42 |
| 88.2 -100.2 | 777.68 | 771.01 |
| 100.2 -112.2 | 789.35 | 782.61 |
| 112.2 -124.2 | 801.03 | 794.20 |

side boundary temperature summary time = 0.0000 seconds
boundary slab node no. 29

| axial zone (inches) | ( 1) | ( 2) | ( |
|---|---|---|---|
| 0.0 - 2.1 | 687.22 | 681.01 | |
| 2.1 - 4.2 | 689.26 | 683.04 | |
| 4.2 - 8.7 | 692.45 | 686.23 | |
| 8.7 - 13.2 | 696.82 | 690.58 | |
| 13.2 - 17.7 | 701.20 | 694.93 | |
| 17.7 - 22.2 | 705.57 | 699.28 | |
| 22.2 - 26.7 | 709.94 | 703.62 | |
| 26.7 - 31.2 | 714.31 | 707.97 | |
| 31.2 - 35.7 | 718.68 | 712.32 | |
| 35.7 - 40.2 | 723.05 | 716.67 | |
| 40.2 - 48.2 | 729.10 | 722.71 | |
| 48.2 - 56.2 | 736.87 | 730.43 | |
| 56.2 - 64.2 | 744.65 | 738.16 | |
| 64.2 - 76.2 | 754.34 | 747.83 | |
| 76.2 - 88.2 | 766.01 | 759.42 | |
| 88.2 -100.2 | 777.68 | 771.01 | |

| | | |
|---|---|---|
| 100.2 -112.2 | 789.35 | 782.61 |
| 112.2 -124.2 | 801.03 | 794.20 |

side boundary temperature summary time = 0.0000 seconds
boundary slab node no. 30

| axial zone (inches) | ( 1) | ( 2) | ( |
|---|---|---|---|
| 0.0 - 2.1 | 687.22 | 681.01 | |
| 2.1 - 4.2 | 689.26 | 683.04 | |
| 4.2 - 8.7 | 692.45 | 686.23 | |
| 8.7 - 13.2 | 696.82 | 690.58 | |
| 13.2 - 17.7 | 701.20 | 694.93 | |
| 17.7 - 22.2 | 705.57 | 699.28 | |
| 22.2 - 26.7 | 709.94 | 703.62 | |
| 26.7 - 31.2 | 714.31 | 707.97 | |
| 31.2 - 35.7 | 718.68 | 712.32 | |
| 35.7 - 40.2 | 723.05 | 716.67 | |
| 40.2 - 48.2 | 729.10 | 722.71 | |
| 48.2 - 56.2 | 736.87 | 730.43 | |
| 56.2 - 64.2 | 744.65 | 738.16 | |
| 64.2 - 76.2 | 754.34 | 747.83 | |
| 76.2 - 88.2 | 766.01 | 759.42 | |
| 88.2 -100.2 | 777.68 | 771.01 | |
| 100.2 -112.2 | 789.35 | 782.61 | |
| 112.2 -124.2 | 801.03 | 794.20 | |

calculated rod temperatures at time = 0.0000 seconds
rod no. 1
assembly 1 (fuel type 1 - cylinder)
0rod o.d. - 0.236 (in.) zone-(fuel dia.(in.)) - 1-(0.236)

| axial zone (in.) | heat flux (mbtu/hr-ft2) | type | hsurf (b/h-f-ft2) | fuel temperatures(f.) fluid | clad |
|---|---|---|---|---|---|
| 0.0 - 2.1 | 0.0000 | 1 | 8460.5 | 1419.1 | 1419.1 |
| 2.1 - 4.2 | 0.0000 | 1 | 8460.5 | 1419.2 | 1419.2 |
| 4.2 - 8.7 | 0.2031 | 1 | 8504.4 | 1453.2 | 1477.1 |
| 8.7 - 13.2 | 0.2031 | 1 | 8549.0 | 1487.6 | 1511.4 |
| 13.2 - 17.7 | 0.2031 | 1 | 8594.0 | 1522.3 | 1545.9 |
| 17.7 - 22.2 | 0.2031 | 1 | 8639.2 | 1557.1 | 1580.6 |
| 22.2 - 26.7 | 0.0000 | 1 | 8640.8 | 1557.9 | 1557.9 |
| 26.7 - 31.2 | 0.0000 | 1 | 8641.5 | 1558.4 | 1558.4 |
| 31.2 - 35.7 | 0.0000 | 1 | 8641.6 | 1558.4 | 1558.4 |
| 35.7 - 40.2 | 0.0000 | 1 | 8023.5 | 1558.2 | 1558.2 |
| 40.2 - 48.2 | 0.0000 | 1 | 7159.4 | 1557.6 | 1557.6 |
| 48.2 - 56.2 | 0.0000 | 1 | 7158.7 | 1556.9 | 1556.9 |
| 56.2 - 64.2 | 0.0000 | 1 | 7158.0 | 1556.2 | 1556.2 |
| 64.2 - 76.2 | 0.0000 | 1 | 7157.1 | 1555.4 | 1555.4 |
| 76.2 - 88.2 | 0.0000 | 1 | 7156.4 | 1554.7 | 1554.7 |
| 88.2 - 100.2 | 0.0000 | 1 | 7155.8 | 1554.2 | 1554.2 |
| 100.2 - 112.2 | 0.0000 | 1 | 7155.5 | 1553.9 | 1553.9 |
| 112.2 - 124.2 | 0.0000 | 1 | 7155.3 | 1553.7 | 1553.7 |

calculated rod temperatures at time = 0.0000 seconds
rod no. 2
assembly 1 (fuel type 1 - cylinder)
0rod o.d. - 0.236 (in.) zone-(fuel dia.(in.)) - 1-(0.236)

| axial zone (in.) | heat flux (mbtu/hr-ft2) | type | hsurf (b/h-f-ft2) | fuel temperatures(f.) fluid | clad |
|---|---|---|---|---|---|
| 0.0 - 2.1 | 0.0000 | 1 | 7652.5 | 1419.1 | 1419.1 |
| 2.1 - 4.2 | 0.0000 | 1 | 7652.5 | 1419.2 | 1419.2 |
| 4.2 - 8.7 | 0.1983 | 1 | 7704.3 | 1463.2 | 1488.9 |
| 8.7 - 13.2 | 0.1983 | 1 | 7750.7 | 1502.6 | 1528.2 |
| 13.2 - 17.7 | 0.1983 | 1 | 7794.1 | 1539.4 | 1564.8 |

| | | | | | |
|---|---|---|---|---|---|
| 17.7 - 22.2 | 0.1982 | 1 | 7835.6 | 1574.7 | 1600.0 |
| 22.2 - 26.7 | 0.0000 | 1 | 7827.9 | 1568.1 | 1568.1 |
| 26.7 - 31.2 | 0.0000 | 1 | 7823.4 | 1564.3 | 1564.3 |
| 31.2 - 35.7 | 0.0000 | 1 | 7820.7 | 1562.0 | 1562.0 |
| 35.7 - 40.2 | 0.0000 | 1 | 7236.7 | 1560.4 | 1560.4 |
| 40.2 - 48.2 | 0.0000 | 1 | 6476.6 | 1558.7 | 1558.7 |
| 48.2 - 56.2 | 0.0000 | 1 | 6475.4 | 1557.6 | 1557.6 |
| 56.2 - 64.2 | 0.0000 | 1 | 6474.6 | 1556.8 | 1556.8 |
| 64.2 - 76.2 | 0.0000 | 1 | 6473.6 | 1555.8 | 1555.8 |
| 76.2 - 88.2 | 0.0000 | 1 | 6472.9 | 1555.1 | 1555.1 |
| 88.2 - 100.2 | 0.0000 | 1 | 6472.3 | 1554.5 | 1554.5 |
| 100.2 - 112.2 | 0.0000 | 1 | 6471.9 | 1554.1 | 1554.1 |
| 112.2 - 124.2 | 0.0000 | 1 | 6471.7 | 1553.8 | 1553.8 |

calculated rod temperatures at time = 0.0000 seconds
rod no. 3
assembly 1 (fuel type 1 - cylinder)
0rod o.d. - 0.236 (in.) zone-(fuel dia.(in.)) - 1-(0.236)

| axial zone (in.) | heat flux (mbtu/hr-ft2) | type | hsurf (b/h-f-ft2) | fuel temperatures(f.) fluid | clad |
|---|---|---|---|---|---|
| 0.0 - 2.1 | 0.0000 | 1 | 7652.5 | 1419.1 | 1419.1 |
| 2.1 - 4.2 | 0.0000 | 1 | 7652.5 | 1419.2 | 1419.2 |
| 4.2 - 8.7 | 0.1935 | 1 | 7706.4 | 1464.9 | 1490.0 |
| 8.7 - 13.2 | 0.1934 | 1 | 7754.7 | 1505.9 | 1530.9 |
| 13.2 - 17.7 | 0.1934 | 1 | 7799.0 | 1543.6 | 1568.4 |
| 17.7 - 22.2 | 0.1934 | 1 | 7840.8 | 1579.1 | 1603.7 |
| 22.2 - 26.7 | 0.0000 | 1 | 7831.9 | 1571.6 | 1571.5 |
| 26.7 - 31.2 | 0.0000 | 1 | 7826.0 | 1566.5 | 1566.5 |
| 31.2 - 35.7 | 0.0000 | 1 | 7822.1 | 1563.2 | 1563.2 |
| 35.7 - 40.2 | 0.0000 | 1 | 7776.7 | 1561.0 | 1561.0 |
| 40.2 - 48.2 | 0.0000 | 1 | 7701.5 | 1558.9 | 1558.9 |
| 48.2 - 56.2 | 0.0000 | 1 | 7699.9 | 1557.5 | 1557.5 |
| 56.2 - 64.2 | 0.0000 | 1 | 7698.9 | 1556.7 | 1556.7 |
| 64.2 - 76.2 | 0.0000 | 1 | 7697.8 | 1555.7 | 1555.7 |

| | | | | | |
|---|---|---|---|---|---|
| 76.2 - 88.2 | 0.0000 | 1 | 7697.0 | 1555.0 | 1555.0 |
| 88.2 - 100.2 | 0.0000 | 1 | 7696.3 | 1554.5 | 1554.5 |
| 100.2 - 112.2 | 0.0000 | 1 | 7695.9 | 1554.1 | 1554.1 |
| 112.2 - 124.2 | 0.0000 | 1 | 7695.6 | 1553.8 | 1553.8 |

calculated rod temperatures at time = 0.0000 seconds
rod no. 4
assembly 1 (fuel type 1 - cylinder)
0rod o.d. - 0.236 (in.) zone-(fuel dia.(in.)) - 1-(0.236)

| axial zone (in.) | heat flux (mbtu/hr-ft2) | type | hsurf (b/h-f-ft2) | fuel temperatures(f.) fluid | clad |
|---|---|---|---|---|---|
| 0.0 - 2.1 | 0.0000 | 1 | 7652.5 | 1419.1 | 1419.1 |
| 2.1 - 4.2 | 0.0000 | 1 | 7652.5 | 1419.2 | 1419.2 |
| 4.2 - 8.7 | 0.1886 | 1 | 7702.2 | 1461.4 | 1485.8 |
| 8.7 - 13.2 | 0.1886 | 1 | 7747.1 | 1499.5 | 1523.8 |
| 13.2 - 17.7 | 0.1886 | 1 | 7789.3 | 1535.4 | 1559.6 |
| 17.7 - 22.2 | 0.1886 | 1 | 7830.2 | 1570.1 | 1594.2 |
| 22.2 - 26.7 | 0.0000 | 1 | 7823.5 | 1564.4 | 1564.4 |
| 26.7 - 31.2 | 0.0000 | 1 | 7819.8 | 1561.3 | 1561.3 |
| 31.2 - 35.7 | 0.0000 | 1 | 7817.7 | 1559.5 | 1559.5 |
| 35.7 - 40.2 | 0.0000 | 1 | 7234.5 | 1558.3 | 1558.3 |
| 40.2 - 48.2 | 0.0000 | 1 | 6475.1 | 1557.2 | 1557.2 |
| 48.2 - 56.2 | 0.0000 | 1 | 6474.3 | 1556.4 | 1556.4 |
| 56.2 - 64.2 | 0.0000 | 1 | 6473.7 | 1555.8 | 1555.8 |
| 64.2 - 76.2 | 0.0000 | 1 | 6473.0 | 1555.2 | 1555.2 |
| 76.2 - 88.2 | 0.0000 | 1 | 6472.5 | 1554.6 | 1554.6 |
| 88.2 - 100.2 | 0.0000 | 1 | 6472.0 | 1554.2 | 1554.2 |
| 100.2 - 112.2 | 0.0000 | 1 | 6471.7 | 1553.8 | 1553.8 |
| 112.2 - 124.2 | 0.0000 | 1 | 6471.5 | 1553.6 | 1553.6 |

calculated rod temperatures at time = 0.0000 seconds
rod no. 5

assembly 1 (fuel type 1 - cylinder)
0rod o.d. - 0.236 (in.) zone-(fuel dia.(in.)) - 1-(0.236)

| axial zone (in.) | heat flux (mbtu/hr-ft2) | type | hsurf (b/h-f-ft2) | fuel temperatures(f.) fluid | clad |
|---|---|---|---|---|---|
| 0.0 - 2.1 | 0.0000 | 1 | 8460.5 | 1419.1 | 1419.1 |
| 2.1 - 4.2 | 0.0000 | 1 | 8460.5 | 1419.2 | 1419.2 |
| 4.2 - 8.7 | 0.1838 | 1 | 8501.5 | 1451.0 | 1472.6 |
| 8.7 - 13.2 | 0.1838 | 1 | 8543.7 | 1483.5 | 1505.1 |
| 13.2 - 17.7 | 0.1838 | 1 | 8587.0 | 1516.9 | 1538.3 |
| 17.7 - 22.2 | 0.1838 | 1 | 8631.1 | 1550.8 | 1572.1 |
| 22.2 - 26.7 | 0.0000 | 1 | 8633.9 | 1552.7 | 1552.7 |
| 26.7 - 31.2 | 0.0000 | 1 | 8635.7 | 1553.9 | 1553.9 |
| 31.2 - 35.7 | 0.0000 | 1 | 8636.7 | 1554.6 | 1554.6 |
| 35.7 - 40.2 | 0.0000 | 1 | 8019.6 | 1555.0 | 1555.0 |
| 40.2 - 48.2 | 0.0000 | 1 | 7156.8 | 1555.1 | 1555.1 |
| 48.2 - 56.2 | 0.0000 | 1 | 7156.7 | 1555.0 | 1555.0 |
| 56.2 - 64.2 | 0.0000 | 1 | 7156.5 | 1554.8 | 1554.8 |
| 64.2 - 76.2 | 0.0000 | 1 | 7156.0 | 1554.4 | 1554.4 |
| 76.2 - 88.2 | 0.0000 | 1 | 7155.6 | 1554.0 | 1554.0 |
| 88.2 - 100.2 | 0.0000 | 1 | 7155.3 | 1553.7 | 1553.7 |
| 100.2 - 112.2 | 0.0000 | 1 | 7155.1 | 1553.5 | 1553.5 |
| 112.2 - 124.2 | 0.0000 | 1 | 7155.0 | 1553.4 | 1553.4 |

calculated rod temperatures at time = 0.0000 seconds
rod no. 6
assembly 1 (fuel type 1 - cylinder)
0rod o.d. - 0.236 (in.) zone-(fuel dia.(in.)) - 1-(0.236)

| axial zone (in.) | heat flux (mbtu/hr-ft2) | type | hsurf (b/h-f-ft2) | fuel temperatures(f.) fluid | clad |
|---|---|---|---|---|---|
| 0.0 - 2.1 | 0.0000 | 1 | 8260.4 | 1419.1 | 1419.1 |
| 2.1 - 4.2 | 0.0000 | 1 | 8260.4 | 1419.2 | 1419.2 |

| | | | | | |
|---|---|---|---|---|---|
| 4.2 - 8.7 | 0.2008 | 1 | 8305.8 | 1455.4 | 1479.6 |
| 8.7 - 13.2 | 0.2008 | 1 | 8350.5 | 1490.8 | 1514.8 |
| 13.2 - 17.7 | 0.2008 | 1 | 8395.0 | 1525.8 | 1549.7 |
| 17.7 - 22.2 | 0.2008 | 1 | 8439.1 | 1560.6 | 1584.4 |
| 22.2 - 26.7 | 0.0000 | 1 | 8438.5 | 1559.8 | 1559.8 |
| 26.7 - 31.2 | 0.0000 | 1 | 8438.2 | 1559.3 | 1559.3 |
| 31.2 - 35.7 | 0.0000 | 1 | 8437.8 | 1558.9 | 1558.9 |
| 35.7 - 40.2 | 0.0000 | 1 | 7761.4 | 1558.4 | 1558.4 |
| 40.2 - 48.2 | 0.0000 | 1 | 6838.3 | 1557.7 | 1557.7 |
| 48.2 - 56.2 | 0.0000 | 1 | 6837.6 | 1556.9 | 1556.9 |
| 56.2 - 64.2 | 0.0000 | 1 | 6836.9 | 1556.3 | 1556.3 |
| 64.2 - 76.2 | 0.0000 | 1 | 6836.1 | 1555.4 | 1555.4 |
| 76.2 - 88.2 | 0.0000 | 1 | 6835.4 | 1554.7 | 1554.7 |
| 88.2 - 100.2 | 0.0000 | 1 | 6834.9 | 1554.2 | 1554.2 |
| 100.2 - 112.2 | 0.0000 | 1 | 6834.5 | 1553.9 | 1553.9 |
| 112.2 - 124.2 | 0.0000 | 1 | 6834.3 | 1553.7 | 1553.7 |

calculated rod temperatures at time = 0.0000 seconds
rod no. 7
assembly 1 (fuel type 1 - cylinder)
0rod o.d. - 0.236 (in.) zone-(fuel dia.(in.)) - 1-(0.236)

| axial zone (in.) | heat flux (mbtu/hr-ft2) | type | hsurf (b/h-f-ft2) | * fuel temperatures(f.) fluid | clad |
|---|---|---|---|---|---|
| 0.0 - 2.1 | 0.0000 | 1 | 7652.5 | 1419.1 | 1419.1 |
| 2.1 - 4.2 | 0.0000 | 1 | 7652.5 | 1419.2 | 1419.2 |
| 4.2 - 8.7 | 0.1960 | 1 | 7703.8 | 1462.7 | 1488.2 |
| 8.7 - 13.2 | 0.1959 | 1 | 7749.8 | 1501.8 | 1527.1 |
| 13.2 - 17.7 | 0.1959 | 1 | 7792.9 | 1538.4 | 1563.6 |
| 17.7 - 22.2 | 0.1959 | 1 | 7834.3 | 1573.6 | 1598.6 |
| 22.2 - 26.7 | 0.0000 | 1 | 7826.8 | 1567.2 | 1567.2 |
| 26.7 - 31.2 | 0.0000 | 1 | 7822.6 | 1563.6 | 1563.6 |
| 31.2 - 35.7 | 0.0000 | 1 | 7819.9 | 1561.4 | 1561.4 |
| 35.7 - 40.2 | 0.0000 | 1 | 7236.2 | 1559.9 | 1559.9 |
| 40.2 - 48.2 | 0.0000 | 1 | 6476.2 | 1558.3 | 1558.3 |

| | | | | | |
|---|---|---|---|---|---|
| 48.2 - 56.2 | 0.0000 | 1 | 6475.1 | 1557.3 | 1557.3 |
| 56.2 - 64.2 | 0.0000 | 1 | 6474.4 | 1556.5 | 1556.5 |
| 64.2 - 76.2 | 0.0000 | 1 | 6473.5 | 1555.6 | 1555.6 |
| 76.2 - 88.2 | 0.0000 | 1 | 6472.8 | 1554.9 | 1554.9 |
| 88.2 - 100.2 | 0.0000 | 1 | 6472.3 | 1554.4 | 1554.4 |
| 100.2 - 112.2 | 0.0000 | 1 | 6471.9 | 1554.0 | 1554.0 |
| 112.2 - 124.2 | 0.0000 | 1 | 6471.7 | 1553.8 | 1553.8 |

calculated rod temperatures at time = 0.0000 seconds
rod no. 8
assembly 1 (fuel type 1 - cylinder)
0rod o.d. - 0.236 (in.) zone-(fuel dia.(in.)) - 1-(0.236)

| axial zone (in.) | heat flux (mbtu/hr-ft2) | type | hsurf (b/h-f-ft2) | fuel temperatures(f.) fluid | clad |
|---|---|---|---|---|---|
| 0.0 - 2.1 | 0.0000 | 1 | 7652.5 | 1419.1 | 1419.1 |
| 2.1 - 4.2 | 0.0000 | 1 | 7652.5 | 1419.2 | 1419.2 |
| 4.2 - 8.7 | 0.1909 | 1 | 7702.7 | 1461.8 | 1486.6 |
| 8.7 - 13.2 | 0.1909 | 1 | 7748.0 | 1500.3 | 1524.9 |
| 13.2 - 17.7 | 0.1909 | 1 | 7790.6 | 1536.4 | 1560.9 |
| 17.7 - 22.2 | 0.1909 | 1 | 7831.6 | 1571.3 | 1595.7 |
| 22.2 - 26.7 | 0.0000 | 1 | 7824.6 | 1565.3 | 1565.3 |
| 26.7 - 31.2 | 0.0000 | 1 | 7820.8 | 1562.1 | 1562.1 |
| 31.2 - 35.7 | 0.0000 | 1 | 7818.4 | 1560.1 | 1560.1 |
| 35.7 - 40.2 | 0.0000 | 1 | 7235.0 | 1558.8 | 1558.8 |
| 40.2 - 48.2 | 0.0000 | 1 | 6475.4 | 1557.5 | 1557.5 |
| 48.2 - 56.2 | 0.0000 | 1 | 6474.6 | 1556.7 | 1556.7 |
| 56.2 - 64.2 | 0.0000 | 1 | 6473.9 | 1556.1 | 1556.1 |
| 64.2 - 76.2 | 0.0000 | 1 | 6473.2 | 1555.3 | 1555.3 |
| 76.2 - 88.2 | 0.0000 | 1 | 6472.6 | 1554.7 | 1554.7 |
| 88.2 - 100.2 | 0.0000 | 1 | 6472.1 | 1554.2 | 1554.2 |
| 100.2 - 112.2 | 0.0000 | 1 | 6471.8 | 1553.9 | 1553.9 |
| 112.2 - 124.2 | 0.0000 | 1 | 6471.6 | 1553.7 | 1553.7 |

calculated rod temperatures at time = 0.0000 seconds
rod no. 9
assembly 1 (fuel type 1 - cylinder)
0rod o.d. - 0.236 (in.) zone-(fuel dia.(in.)) - 1-(0.236)

| axial zone (in.) | heat flux (mbtu/hr-ft2) | type | hsurf (b/h-f-ft2) | fuel temperatures(f.) fluid | clad |
|---|---|---|---|---|---|
| 0.0 - 2.1 | 0.0000 | 1 | 8260.4 | 1419.1 | 1419.1 |
| 2.1 - 4.2 | 0.0000 | 1 | 8260.4 | 1419.2 | 1419.2 |
| 4.2 - 8.7 | 0.1861 | 1 | 8303.4 | 1453.5 | 1475.9 |
| 8.7 - 13.2 | 0.1861 | 1 | 8346.2 | 1487.4 | 1509.6 |
| 13.2 - 17.7 | 0.1861 | 1 | 8389.2 | 1521.3 | 1543.5 |
| 17.7 - 22.2 | 0.1861 | 1 | 8432.5 | 1555.4 | 1577.5 |
| 22.2 - 26.7 | 0.0000 | 1 | 8433.0 | 1555.4 | 1555.4 |
| 26.7 - 31.2 | 0.0000 | 1 | 8433.5 | 1555.7 | 1555.7 |
| 31.2 - 35.7 | 0.0000 | 1 | 8433.8 | 1555.8 | 1555.8 |
| 35.7 - 40.2 | 0.0000 | 1 | 7758.4 | 1555.9 | 1555.9 |
| 40.2 - 48.2 | 0.0000 | 1 | 6836.3 | 1555.7 | 1555.7 |
| 48.2 - 56.2 | 0.0000 | 1 | 6836.0 | 1555.4 | 1555.4 |
| 56.2 - 64.2 | 0.0000 | 1 | 6835.7 | 1555.1 | 1555.1 |
| 64.2 - 76.2 | 0.0000 | 1 | 6835.2 | 1554.6 | 1554.6 |
| 76.2 - 88.2 | 0.0000 | 1 | 6834.8 | 1554.2 | 1554.2 |
| 88.2 - 100.2 | 0.0000 | 1 | 6834.4 | 1553.8 | 1553.8 |
| 100.2 - 112.2 | 0.0000 | 1 | 6834.2 | 1553.6 | 1553.6 |
| 112.2 - 124.2 | 0.0000 | 1 | 6834.1 | 1553.5 | 1553.5 |

calculated rod temperatures at time = 0.0000 seconds
rod no. 10
assembly 1 (fuel type 1 - cylinder)
0rod o.d. - 0.236 (in.) zone-(fuel dia.(in.)) - 1-(0.236)

| axial zone | heat flux | type | hsurf | fuel temperatures(f.) fluid | clad |
|---|---|---|---|---|---|

| (in.) | (mbtu/hr-ft2) | | (b/h-f-ft2) * | | |
|---|---|---|---|---|---|
| 0.0 - 2.1 | 0.0000 | 1 | 8463.0 | 1419.1 | 1419.1 |
| 2.1 - 4.2 | 0.0000 | 1 | 8463.0 | 1419.2 | 1419.2 |
| 4.2 - 8.7 | 0.1983 | 1 | 8506.2 | 1452.7 | 1476.0 |
| 8.7 - 13.2 | 0.1983 | 1 | 8550.2 | 1486.7 | 1509.9 |
| 13.2 - 17.7 | 0.1983 | 1 | 8594.9 | 1521.0 | 1544.1 |
| 17.7 - 22.2 | 0.1983 | 1 | 8639.8 | 1555.6 | 1578.5 |
| 22.2 - 26.7 | 0.0000 | 1 | 8641.6 | 1556.7 | 1556.7 |
| 26.7 - 31.2 | 0.0000 | 1 | 8$2.6 | 1557.3 | 1557.3 |
| 31.2 - 35.7 | 0.0000 | 1 | 8642.9 | 1557.5 | 1557.5 |
| 35.7 - 40.2 | 0.0000 | 1 | 8025.7 | 1557.4 | 1557.4 |
| 40.2 - 48.2 | 0.0000 | 1 | 7162.7 | 1556.9 | 1556.9 |
| 48.2 - 56.2 | 0.0000 | 1 | 7162.1 | 1556.4 | 1556.4 |
| 56.2 - 64.2 | 0.0000 | 1 | 7161.6 | 1555.9 | 1555.9 |
| 64.2 - 76.2 | 0.0000 | 1 | 7160.8 | 1555.1 | 1555.1 |
| 76.2 - 88.2 | 0.0000 | 1 | 7160.1 | 1554.5 | 1554.5 |
| 88.2 - 100.2 | 0.0000 | 1 | 7159.6 | 1554.1 | 1554.1 |
| 100.2 - 112.2 | 0.0000 | 1 | 7159.3 | 1553.8 | 1553.8 |
| 112.2 - 124.2 | 0.0000 | 1 | 7159.2 | 1553.6 | 1553.6 |

calculated rod temperatures at time = 0.0000 seconds
rod no. 11
assembly 1 (fuel type 1 - cylinder)
0rod o.d. - 0.236 (in.) zone-(fuel dia.(in.)) - 1-(0.236)

| axial zone (in.) | heat flux (mbtu/hr-ft2) | type | hsurf (b/h-f-ft2) * | * fuel temperatures(f.) fluid | clad |
|---|---|---|---|---|---|
| 0.0 - 2.1 | 0.0000 | 1 | 8260.4 | 1419.1 | 1419.1 |
| 2.1 - 4.2 | 0.0000 | 1 | 8260.4 | 1419.2 | 1419.2 |
| 4.2 - 8.7 | 0.1934 | 1 | 8304.7 | 1454.5 | 1477.7 |
| 8.7 - 13.2 | 0.1934 | 1 | 8348.4 | 1489.1 | 1512.3 |
| 13.2 - 17.7 | 0.1934 | 1 | 8392.2 | 1523.6 | 1546.7 |
| 17.7 - 22.2 | 0.1935 | 1 | 8435.9 | 1558.1 | 1581.0 |
| 22.2 - 26.7 | 0.0000 | 1 | 8435.8 | 1557.6 | 1557.6 |
| 26.7 - 31.2 | 0.0000 | 1 | 8435.9 | 1557.5 | 1557.5 |

| | | | | | |
|---|---|---|---|---|---|
| 31.2 - 35.7 | 0.0000 | 1 | 8435.8 | 1557.4 | 1557.4 |
| 35.7 - 40.2 | 0.0000 | 1 | 7759.9 | 1557.1 | 1557.1 |
| 40.2 - 48.2 | 0.0000 | 1 | 6837.3 | 1556.6 | 1556.6 |
| 48.2 - 56.2 | 0.0000 | 1 | 6836.8 | 1556.1 | 1556.1 |
| 56.2 - 64.2 | 0.0000 | 1 | 6836.3 | 1555.7 | 1555.7 |
| 64.2 - 76.2 | 0.0000 | 1 | 6835.6 | 1555.0 | 1555.0 |
| 76.2 - 88.2 | 0.0000 | 1 | 6835.1 | 1554.4 | 1554.4 |
| 88.2 - 100.2 | 0.0000 | 1 | 6834.7 | 1554.0 | 1554.0 |
| 100.2 - 112.2 | 0.0000 | 1 | 6834.4 | 1553.7 | 1553.7 |
| 112.2 - 124.2 | 0.0000 | 1 | 6834.2 | 1553.6 | 1553.6 |

calculated rod temperatures at time = 0.0000 seconds
rod no. 12
assembly 1 (fuel type 1 - cylinder)
0rod o.d. - 0.236 (in.) zone-(fuel dia.(in.)) - 1-(0.236)

| axial zone (in.) | heat flux (mbtu/hr-ft2) | type | hsurf (b/h-f-ft2) | * fuel temperatures(f.) fluid | clad |
|---|---|---|---|---|---|
| 0.0 - 2.1 | 0.0000 | 1 | 8463.0 | 1419.1 | 1419.1 |
| 2.1 - 4.2 | 0.0000 | 1 | 8463.0 | 1419.2 | 1419.2 |
| 4.2 - 8.7 | 0.1886 | 1 | 8504.7 | 1451.6 | 1473.7 |
| 8.7 - 13.2 | 0.1886 | 1 | 8547.6 | 1484.6 | 1506.7 |
| 13.2 - 17.7 | 0.1886 | 1 | 8591.3 | 1518.3 | 1540.3 |
| 17.7 - 22.2 | 0.1886 | 1 | 8635.8 | 1552.4 | 1574.3 |
| 22.2 - 26.7 | 0.0000 | 1 | 8638.2 | 1554.0 | 1554.0 |
| 26.7 - 31.2 | 0.0000 | 1 | 8639.7 | 1555.1 | 1555.1 |
| 31.2 - 35.7 | 0.0000 | 1 | 8640.5 | 1555.6 | 1555.6 |
| 35.7 - 40.2 | 0.0000 | 1 | 8023.8 | 1555.8 | 1555.8 |
| 40.2 - 48.2 | 0.0000 | 1 | 7161.4 | 1555.7 | 1555.7 |
| 48.2 - 56.2 | 0.0000 | 1 | 7161.1 | 1555.5 | 1555.5 |
| 56.2 - 64.2 | 0.0000 | 1 | 7160.8 | 1555.1 | 1555.1 |
| 64.2 - 76.2 | 0.0000 | 1 | 7160.2 | 1554.6 | 1554.6 |
| 76.2 - 88.2 | 0.0000 | 1 | 7159.7 | 1554.2 | 1554.2 |
| 88.2 - 100.2 | 0.0000 | 1 | 7159.4 | 1553.8 | 1553.8 |
| 100.2 - 112.2 | 0.0000 | 1 | 7159.1 | 1553.6 | 1553.6 |

```
112.2 - 124.2    0.0000    1          7159.0     1553.5   1553.5

iterations =   20

 input transient time completed

common dumped to tape 8
1***** computational time summary *****

    subroutine energy.....................    7.37  sec
    subroutine moment.....................    0.56  sec
    subroutine reheat.....................    0.31  sec
    subroutine recirc (pressure loop)....    0.86  sec
    subroutine result.....................    0.32  sec
    subroutine setup......................    0.27  sec
    other subroutines.....................    3.50  sec

    total cpu time........................   13.18  sec
```

# DISTRIBUTION

No. of Copies

OFFSITE

110 DOE Technical Information Center

R. Bown
U.S. Department of Energy
Office of Civilian Radioactive Waste Management
RW-30
Washington, DC 20545

J. Epstein
U.S. Department of Energy
Office of Civilian Radioactive Waste Management
RW-30
Washington, DC 20545

J. R. Hilley
U.S. Department of Energy
Office of Storage and Transportation Systems
Washington, DC 20545

D. E. Shelor
U.S. Department of Energy
Office of Civilian Radioactive Waste Management
RW-32
Washington, DC 20545

H. Steinburg
U.S. Department of Energy
Office of Storage and Transportation Systems
RW-33
1000 Independence Ave.

No. of Copies

W. Stringfield
U.S. Department of Energy
Office of Civilian Radioactive Waste Management
Washington, D.C. 20545

R. E. Steins
U.S. Department of Energy
Idaho Operations Office
550 2nd Street
Idaho Falls, ID 83401

K. G. Golliher
U.S. Department of Energy
Albuquerque Operations Office
P.O. Box 5400
Albuquerque, NM 87115

L. Lanni
U.S. Department of Energy
Magnetic Fusion and Energy Division
San Francisco Operations Office
1333 Broadway
Oakland, CA 94612

C. Matthews
U.S. Department of Energy
Oak Ridge National Laboratory
P.O. Box E
Oak Ridge, TN 37830

D. Veith
U.S. Department of Energy
Nevada Operations Office
P.O. Box 14100
Las Vegas, NV 89114

No. of
Copies

N. H. Davison
U.S. Nuclear Regulatory
Commission
Office of Nuclear Materials
Safety and Safeguards
Washington, DC 20555

C. Feldman
U.S. Nuclear Regulatory
Commission
Office of Nuclear Regulatory
Research
MS 5650 NL
Washington, DC 20555

W. Lake
U.S. Nuclear
Commission
Office of Nuclear Materials
Safety and Safeguards
Washington, DC 20555

C. H. Peterson
U.S. Nuclear Regulatory
Commission
Office of Nuclear Material
Safety and Safeguards
MS 62355
Washington, DC 20555

J. A. Carr
Battelle Memorial Institute
Office of Nuclear Waste
Isolation
505 King Avenue
Columbus, OH 43201

B. A. Rowles
Battelle Memorial Institute
Office of Nuclear Waste
Isolation
505 King Avenue
Columbus, OH 43201

No. of
Copies

R. Kunita
Carolina Power & Light Co.
P.O. Box 1551
Raleigh, NC 27602

C. K. Anderson
Combustion Engineering, Inc.
1000 Prospect Hill Road
Windsor, CT 06095

V. Walker
Ebasco Services Incorporated
Two World Trade Center
New York, NY 10048

D. H. Schoonen
EG&G
P.O. Box 1625
Idaho Falls, ID 83415

P. E. Eggers
Eggers Ridihalgh Partners, Inc.
1445 Summit Street
Columbus, OH 43201

FLUOR Engineers, Inc.
Advanced Technology Division
P.O. Box C-11944
Santa Anna, CA 92711-1944

E. E. Volland
General Electric Company
Nuclear Fuel & Services
Division
7555 E. Collins Road
Morris, IL 60450

R. Anderson
General Nuclear Services, Inc.
135 Darling Drive
Avon, CT 06001

No. of
Copies

L. B. Ballou
Lawrence Livermore National
Laboratory
P.O. Box 808
Livermore, CA 94550

M. W. Schwartz
Lawrence Livermore National
Laboratory
P.O. Box 808
Livermore, CA 94550

C. E. Walter
Lawrence Livermore National
Laboratory
P.O. Box 808
Livermore, CA 94550

H. Lowenberg
Lowenberg Associates
10901 Rosemont Drive
Rockville, MD 20852

J. Houston
Nuclear Assurance Corporation
5720 Peach Tree Parkway
Norcross, GA 30092

R. T. Haelsig
Nuclear Packaging Inc.
1010 S. 336th Street
Federal Way, WA 98003

L. E. Wiles
Numerical Applications, Inc.
825 Goethals Drive
Richland, WA 99352

J. V. Massey
NUTECH Engineers
145 Martinvale Lane
San Jose, CA 95116

C. V. Parks
Oak Ridge National Laboratory
P.O. Box X
Oak Ridge, TN 37831

No. of
Copies

D. Woods
Ralph M. Parson Co.
100 West Walnut Street
Pasadena, CA 91124

T. L. Sanders
Sandia National Laboratory
Albuquerque, NM

M. E. Mason
Transnuclear, Inc.
1 N. Broadway
White Plains, NY 10601

TRW, Inc.
Energy Development Group
Suite 201
200 Union Blvd.
Denver, CO 80228

C. E. King
Uranium Mgt. Corp.
175 Curtner Ave. MC 620
San Jose, CA 95125

M. L. Smith
Virginia Electric Power Co.
P.O. Box 26666
Richmond, VA 23261

K. L. Basehore
Virginia Electric and Power Co.
Power Station Engineering
The Electric Building
P.O. Box 564
7th and Franklin
Richmond, VA 23204

D. L. Larkin
Washington Public Power
Supply System
P.O. Box 968
Richland, WA 99352

No. of
Copies

R. O. Anderson
Northern States Power Company
15 S. 15th Street
Minneapolis, MN 55401

G. Swindlehurst
Duke Power Company
P.O. Box 33189
422 S. Church Street
Charlotte, NC 28242

D. Hamilton
Middle South Services, Inc.
Box 61000
New Orleans, LA 70161

G. R. Bond
Manager, Nuclear Fuels
General Public Utilities, NUC
100 Interpace Parkway
Parsippany, NJ 07054

J. R. Ratliff
Tennessee Valley Authority
409 Krystal Building
Chattanooga, TN 37401

B. Rice
Texas Utilities Generating Co.
Skyway Tower
400 North Olive Street
LD81
Dallas, TX 75201

R. K. Van Galder
Associate Engineer
Long Island Light Company
175 E. Old Country Road
Hicksville, NY 11801

H. E. Bliss
Nuclear Fuel Services
Commonwealth Edison
72 West Adams Street
P.O. Box 767
Chicago, IL 60690

No. of
Copies

R. T. Harris
Northeast Utilities
P.O. Box 270
Hartford, CN 06101

A. Ladieu
Yankee Atomic Electric Company
1671 Worcester Road
Framingham, MA 01701

D. S. Rowe
Rowe and Associates
14400 Bellevue-Redmond Road,
Suite 208
Bellevue, WA 98007

E. U. Khan
U.S. Department of Energy Hdq.
Office of Space Reactor Projects
19901 Germantown Road
Germantown, MD 20874

Y. Hsii
Division of Systems Integration
Office of Nuclear Regulation
U.S. NRC
Washington, D.C. 20555

Larry Phillips
Division of Systems Integration
Office of Nuclear Regulation
U.S. NRC
Washington, D.C. 20555

Lance Agee
Electric Power Research Institute
P.O. Box 10412
Palo Alto, CA 94303

Ray Lambert
Electric Power Research Institute
P.O. Box 10412
Palo Alto, CA 94303

No. of
Copies

G. S. Srikantiah
Electric Power Research Institute
P.O. Box 10412
Palo Alto, CA 94303

R. Rice
EG&G Idaho, Inc.
P.O. Box 1625
Idaho Falls, ID 83415

J. H. Saling
Westinghouse Electric Corp.
Waste Technology Services
Division
P.O. Box 10864
Pittsburg, PA 15236

Dr. D. Klein
Mechanical Engineering Department
University of Texas
Austin, TX 78712

B. A. Chin
Mechanical Engineering Dept.
247 Wilmore Labs
Auburn University, AL 36849

ONSITE

2 DOE Richland Operations Office

R. D. Izatt
J. P. Collins

2 Hanford Engineering Development Laboratory

R. Einziger
R. Stover

3 Rockwell Hanford Operations

M. B. Arndt
C. L. Brown
G. T. Harper

No. of
Copies

40 Pacific Northwest Laboratory

G. H. Beeman
J. M. Cuta
J. M. Creer (10)
C. M. Heeb
A. B. Johnson, Jr.
B. M. Johnson
D. K. Kreid
N. J. Lombardo
R. A. McCann
T. E. Michener
D. R. Rector (10)
C. W. Stewart
R. A. Stokes
D. S. Trent
C. L. Wheeler
Technical Library (5)
Publishing Coordination (2)