Duke Power
A Duke Energy Company

Catawba Nuclear Station
Units 1 and 2

ODCM

Offsite Dose
Calculation Manual
2004

Duke Power
A Duke Energy Company

Catawba Nuclear Station
Units 1 and 2

OFFSITE DOSE CALCULATION MANUAL (ODCM)

Prepared By:__C. D. Ingram_____ **General Office Radiation Protection**	**Approved By:__L. E. Haynes_____** **Technical Manager, RP, Nuclear GO**
REVISION NUMBER **46**	**EFFECTIVE YEAR** **____2004_____**

Reviewed By:
__C. V. Wray, Jr._____
CNS Radiation Protection

Approved By:
__R. M. Glover_____
CNS Station Manager

TABLE OF CONTENTS

Executive Summary . . . . . Executive Summary-1

1.0 Radwaste Systems 1-1
1.0.1 Liquid Radwaste Processing 1-1
1.0.2 Gaseous Radwaste Processing 1-4
1.0.2.1 Gas Collection System 1-4
1.0.2.2 Containment and Auxiliary Building Ventilation 1-4
1.0.2.3 Secondary Systems 1-5

2.0 Release Rate Calculations 2-1
2.0.1 Liquid Release Rate Limit Calculations 2-1
2.0.1.1 RL/RN Discharge Release Rate Limit Calculation 2-1
2.0.1.2 WC Discharge Continuous Releases 2-2
2.0.2 Gaseous Release Rate Limit Calculations 2-5
2.0.2.1 Unit Vent Discharge Release Rate Limit Calculation 2-5

3.0 Setpoint Calculations 3-1
3.0.1 Liquid Radiation Monitor Setpoint Calculations 3-1
3.0.1.1 WMT,RMT and AMT Setpoints (EMF 49 and EMF 57) 3-2
3.0.1.2 Turbine Building Sump to WC Setpoints (EMF 31) 3-3
3.0.2 Gaseous Radiation Monitor Setpoint Calculations 3-6
3.0.2.1 Containment Air Release and Addition (VQ) Setpoints (EMF 39, EMF 36) . 3-8
3.0.2.2 Containment Purge (VP) and Incore Purge (IP) Setpoints (EMF 39, EMF 36) . 3-9
3.0.2.3 Waste Gas Decay Tank (WGDT) Setpoints (EMF 50, EMF 36) 3-10

4.0 Effluent Dose Models 4-1
4.0.1 Liquid Effluent Dose Model for the Maximum Exposed Individual 4-1
4.0.2 Gaseous Effluent Dose Model for the Maximum Exposed Individual 4-7
4.0.3 Direct Radiation 4-18
4.0.4 Effluent Apportionment 4-18

5.0 Fuel Cycle Calculations 5-1
5.0.1 Milling 5-1
5.0.2 Conversion 5-1
5.0.3 Enrichment 5-1
5.0.4 Fuel Fabrication 5-1
5.0.5 Nuclear Power Production 5-2
5.0.6 Fuel Reprocessing 5-2
5.0.7 40CFR190 Total Dose Determination 5-2

6.0 Environmental Locations 6-1
6.0.1 Site Description and Sample Locations 6-1
6.0.2 Land Use Census Data 6-1
6.0.3 Catawba Meteorology: Relative Air Concentrations and Deposition 6-8
6.0.3.1 XOQDOQ Methodology and Assumptions 6-8
6.0.3.2 Meteorological Data 6-8
6.0.3.3 Annual XOQDOQ Comparison to the ODCM 6-9

7.0 Licensee Initiated Changes 7-1

Appendices

Appendix A: Dose Factors for Exposure to a Semi-Infinite Cloud of Noble Gas A-1
Appendix B: P_i Infant Dose Factors for use in the Gaseous Release Rate Limit Calculations . B-1
Appendix C: A_i Adult Dose Factors for use in the Liquid Dose Calculations C-1
Appendix D: A_i Teen Dose Factors for use in the Liquid Dose Calculations D-1
Appendix E: A_i Child Dose Factors for use in the Liquid Dose Calculations E-1
Appendix F: A_i Infant Dose Factors for use in the Liquid Dose Calculations F-1
Appendix G: R_i Adult Dose Factors for use in the Gaseous Dose Calculations G-1
Appendix H: R_i Teen Dose Factors for use in the Gaseous Dose Calculations H-1
Appendix I: R_i Child Dose Factors for use in the Gaseous Dose Calculations I-1
Appendix J: R_i Infant Dose Factors for use in the Gaseous Dose Calculations J-1

LIST OF FIGURES

1.0-1 Liquid Radwaste System 1-3
1.0-2 Gaseous Radwaste System (2 pages) 1-6
2.0-1 Liquid Radwaste Discharge Locations 2-3
2.0-2 Liquid Radwaste Discharge to Lake Wylie 2-4
2.0-3 Unit Vent Release Points 2-8
6.0-1 Sampling Locations Map (Site Boundary). 6-5
6.0-2 Sampling Locations Map (Ten Mile Radius) 6-6
6.0-3 Land Use Census Map 6-7

LIST OF TABLES

3.0-1 EMF 49 and EMF 31 Cs-137 Equivalence Factors 3-4
3.0-2 EMF 57 Cs-137 Equivalence Factors. 3-5
3.0-3 Xe-133 Equivalents 3-11
6.0-1 Sampling Locations 6-2
6.0-2 TLD Sites 6-3
6.0-3 Land Use Census Results 6-4
6.0-4 CNS Atmospheric Stability Frequency (1988 - 1992) 6-9
6.0-5 CNS Frequency of Wind Direction and Speed (1988 - 1992) 6-9
6.0-6 CNS Limiting χ/Q and D/Q Values (1988 - 1992) 6-10
6.0-7 CNS Delta-T Ranges per Vertical Separation Distances 6-10
6.0-8 Catawba χ/Q Average Values (1988-1992) 6-11
6.0-9 Catawba D/Q Average Values (1988-1992) 6-12

EXECUTIVE SUMMARY

The Catawba Nuclear Station (CNS) Offsite Dose Calculation Manual (ODCM) provides the methodology and parameters to be used in the calculation of offsite doses due to normal operation radioactive liquid and gaseous effluents to assure compliance with the dose limitations of the Selected Licensee Commitments (SLCs, UFSAR Chapter 16) and Technical Specifications. These dose limitations assure that:

(1) the concentration of radioactive liquid effluents released from the site to the unrestricted area will be limited to 10 times the effluent concentration (EC) levels of 10CFR20, Appendix B, Table 2, and 2.0E-04 µCi/ml for dissolved and entrained noble gases;

(2) the exposures to any individual member of the public from radioactive liquid effluents will not result in doses greater than the design objectives of 10CFR50, Appendix I;

(3) the dose rate at any time at the site boundary from radioactive gaseous effluents will be limited to: for noble gases; less than or equal to 500 mrem/yr to the whole body, and less than or equal to 3000 mrem/yr to the skin; and for iodine-131 and iodine-133, for tritium, and for all radioactive materials in particulate form with half-lives greater than 8 days; less than or equal to 1500 mrem/yr to any organ;

(4) the exposure to any individual member of the public from radioactive gaseous effluents will not result in doses greater than the design objectives of 10CFR50, Appendix I; and

(5) the dose to any individual member of the public from the nuclear fuel cycle will not exceed the limits of 40CFR190.

The methodology and parameters used to assure compliance with the dose limitations described above shall be used to prepare the radioactive liquid and gaseous effluent reports required by the SLCs and Technical Specifications. Dose calculations that demonstrate compliance with 40CFR190 will be considered to demonstrate compliance with the 10CFR20 0.1-rem annual dose limit. The

ODCM also provides the methodology and parameters to be used in the calculation of radioactive liquid and gaseous effluent monitoring instrumentation alarm/trip setpoints to assure compliance with the concentration and dose rate limitations of the SLCs and Technical Specifications. Normally RETDAS, a computer code that implements NUREG-0133 methodology, is used for the calculation of offsite doses, but the ODCM also provides a method for the calculation of offsite doses when RETDAS is not available.

The ODCM has been prepared as generically as possible in order to minimize the need for revisions. However, some changes to the ODCM such as land-use census data are expected on an annual basis. Any changes to the methodology and parameters to be used in this ODCM shall be reviewed by knowledgeable individual(s), and approved by the Station Manager and the General Office Radiation Protection Manager prior to implementation. Changes to the ODCM shall be submitted to the Nuclear Regulatory Commission in accordance with the SLCs and Technical Specifications.

The ODCM does not replace any station implementing procedures. Programmatic controls for radioactive effluents and radiological environmental monitoring are contained in the Administrative Controls chapter of the Technical Specifications. Procedural details for radioactive effluents and radiological environmental monitoring consisting of licensee commitments, applicability, remedial actions, surveillance requirements, and the bases for these requirements are contained in Section 16.11 of the SLCs.

1.0 RADWASTE SYSTEMS

1.0.1 LIQUID RADWASTE PROCESSING

The liquid radwaste system at Catawba Nuclear Station is used to collect and treat liquid chemical and radiochemical byproducts of unit operation. The system produces effluents that can be reused in the plant or discharged in small, dilute quantities to the environment. The means of treatment vary with waste type and desired product in the various systems:

(A) Filtration - Waste sources are filtered during processing. In some cases, such as the Laundry and Hot Shower Tank (LHST) subsystem of the Liquid Waste System (WL), filtration may be the only treatment required.

(B) Adsorption - Adsorption of halides and organic chemicals by activated charcoal (carbon filter) may be used as needed in treating waste streams in WL. The carbon filter is designed to remove organophosphates and free chlorine. Activated charcoal need not be used when these chemicals are not present (e.g., phosphate detergents are not used at the station). Ion exchange resin or other media may be used in the carbon filter vessel as desired.

(C) Ion Exchange - Ion exchange is used to remove radioactive cations from solution, as in the case of either LHST or Floor Drain Tank (FDT) waste in WL, after removal of organics by carbon filtration (adsorption). Ion exchange is also used in removing both cations (cobalt, manganese) and anions (chloride, fluoride) from evaporator distillates in order to purify the distillates for reuse as makeup water. Distillate from the Waste Evaporator in WL and the Boron Recycle Evaporator in the Boron Recycle System (NB) can be treated by this method, as well as FDT, LHST waste, and reactor bleed.

(D) Gas Stripping - Removal of gaseous radioactive fission products is accomplished in both the WL Evaporator and the NB Evaporator.

(E) Distillation - Production of pure water from the waste by boiling it away from the contaminated solution which it was originally contained is accomplished by both evaporators. Proper control of the process will yield water that can be reused for makeup. Polishing of this product can be achieved by ion exchange as discussed above.

(F) Concentration - In both the WL and NB Evaporators, dissolved chemicals are concentrated in the lower shell as water is boiled away. In the case of the WL Evaporator, the volume of water containing waste chemicals and radioactive cations is reduced so that the waste may be more easily and cheaply solidified and shipped

for burial. In the NB Evaporator, the dilute boron is normally concentrated to 4% so that it may be reused for makeup to the reactor coolant system.

Figure 1.0-1 is a schematic representation of the liquid radwaste system at Catawba.

Figure 1.0-1 Catawba Nuclear Station Liquid Radwaste System

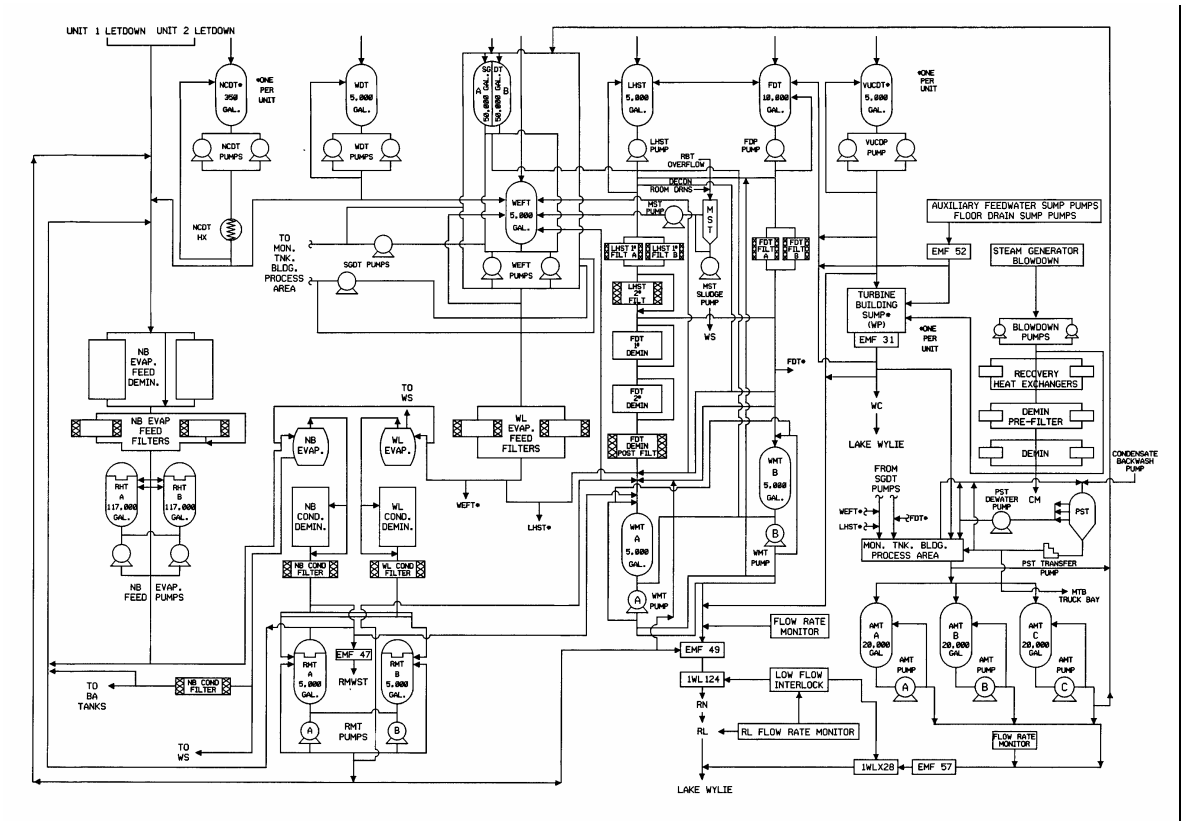

1.0.2 GASEOUS RADWASTE PROCESSING

The Gaseous Waste System (WG) for Catawba is designed with the capability of processing the fission product gases from contaminated reactor coolant fluids resulting from operation. The design basis for the WG shown schematically in Figure 1.0-2 is the retention, through the plant lifetime, of all the gaseous fission products to be discharged from the reactor coolant system to the Chemical and Volume Control System (NV) and other plant systems to eliminate the need for intentional discharge of radioactive gases from the waste gas holdup tanks. Actual system operation is aimed at maximizing storage time for decay prior to infrequent releases. Unavoidable sources of low level radioactive gaseous discharge to the environment will be from periodic purging operations of the containment, and through the secondary system air ejector. With respect to the former, the potential contamination is expected to arise from non-recyclable reactor coolant leakage. With respect to the air ejector, the potential source of contamination will be from leakage of the reactor coolant to the secondary system through defects in steam generator tubes. The gaseous waste disposal system includes two waste gas compressors, two catalytic hydrogen recombiners, six gas decay storage tanks for use during normal power generation, and two gas decay storage tanks for use during shutdown and startup operations, and for pressure relief.

1.0.2.1 GAS COLLECTION SYSTEM

The gas collection system combines the waste hydrogen and fission gases from the volume control tanks, the boron recycle and liquid waste gas stripper evaporators, and other sources produced during normal operation or the gas collected during the shutdown degasification (high percentage of hydrogen), and cycles it through the catalytic recombiners to convert hydrogen to water. After the water vapor is removed, the resulting gas stream is transferred from the recombiner into the gas decay tanks, where the accumulated activity may be contained in six approximately equal parts. From the decay tanks, the gas flows back to the compressor suction to complete the circuit.

1.0.2.2 CONTAINMENT AND AUXILIARY BUILDING VENTILATION

Non-recyclable reactor coolant leakage occurring either inside the containment or inside the auxiliary building will generate gaseous activity. Gases resulting from leakage inside the containment will be contained until the containment air is released through either the Containment Air Release and Addition System (VQ) or the Containment Purge System (VP). The containment atmosphere will be discharged through charcoal adsorbers to reduce releases to the environment.

Gases resulting from leakage inside the auxiliary building are released, without further decay, to the atmosphere. The ventilation exhaust from potentially contaminated areas in the auxiliary building is passed through charcoal adsorbers to reduce releases to the atmosphere upon a radiation monitor alarm.

1.0.2.3 SECONDARY SYSTEMS

Normally, condensate flow and steam generator blowdown will go parallel through 4 of the 5 condensate polishing demineralizers to remove activity and harmful ions from the water. Non-condensable gases will be taken from the secondary system by the condenser steam air ejector, and are passed through a radiation monitor to the unit vent.

Figure 1.0-2 is a schematic representation of the gaseous radwaste system at Catawba.

Figure 1.0-2 Catawba Nuclear Station Gaseous Radwaste System
Page 1 of 2

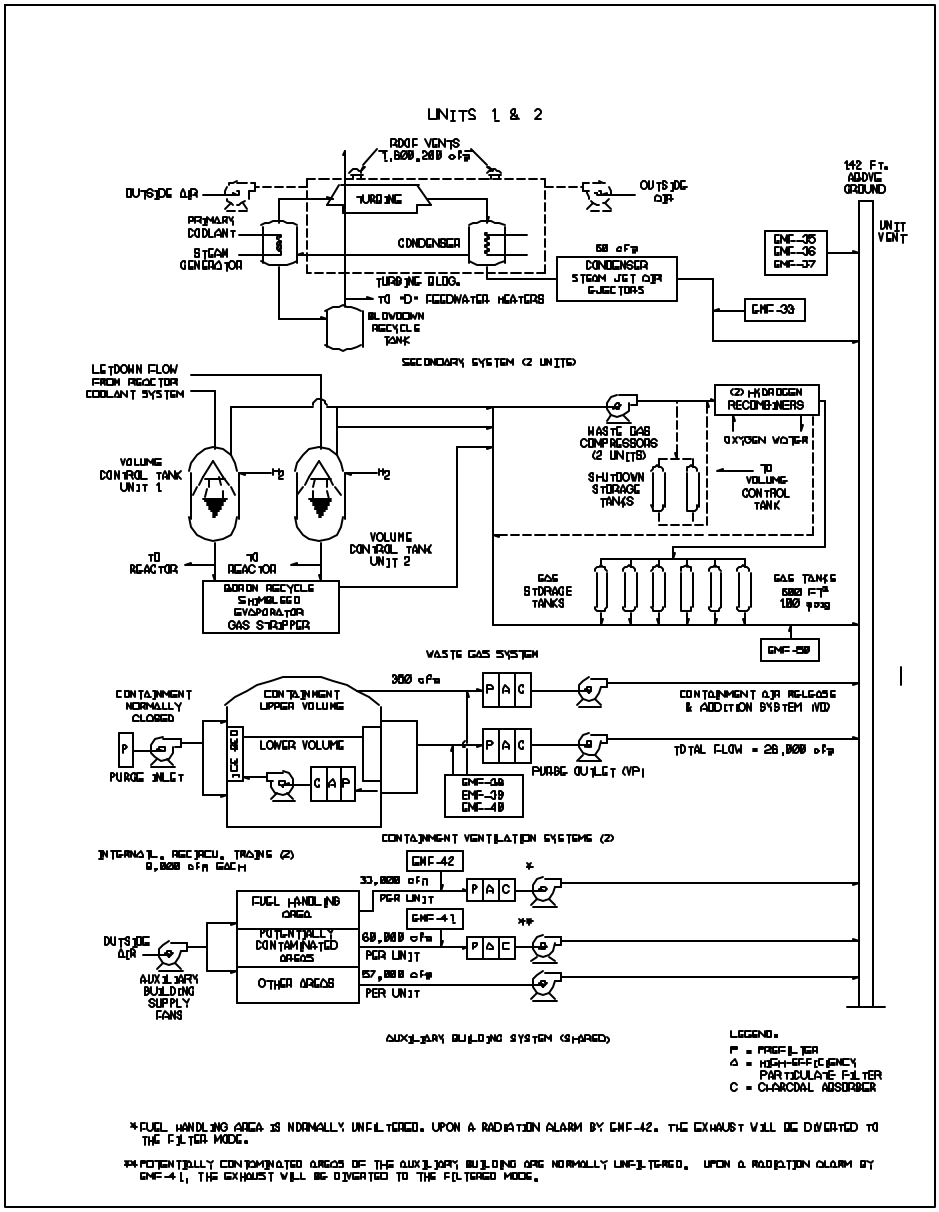

Figure 1.0-2 Catawba Nuclear Station Gaseous Radwaste System
Page 2 of 2

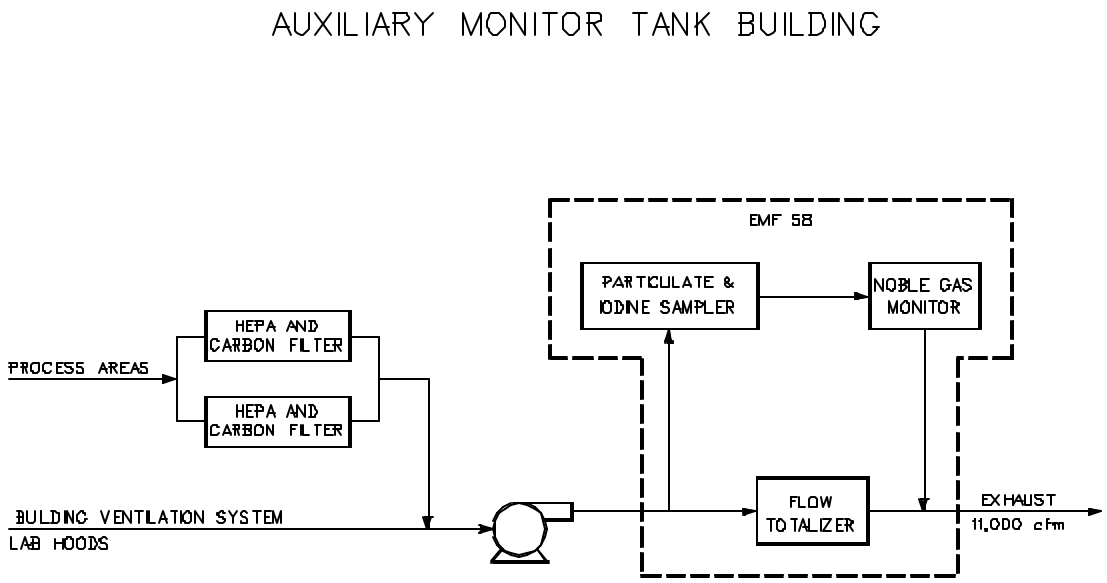

2.0 RELEASE RATE CALCULATIONS

2.0.1 LIQUID RELEASE RATE LIMIT CALCULATIONS

There are two liquid radwaste discharge points to the environment at Catawba; (1) the Low Pressure Service Water System (RL) and Nuclear Service Water System (RN) discharge point to Lake Wylie, and (2) the Conventional Waste Water Treatment System (WC) discharge point to Lake Wylie (See Figure 2.0-1).

2.0.1.1 RL/RN DISCHARGE RELEASE RATE LIMIT CALCULATION

Liquid releases to Lake Wylie through the RL/RN pathway normally contain the radioactive releases from the site including effluents from the waste monitor tanks, recycle monitor tanks, and auxiliary monitor tanks. The RL/RN discharge point can also contain turbine building sump (TBS) releases, however TBS effluent is normally released through the WC discharge point. There are three RL pumps with a minimum flow rate of 19,000 gpm each, and four RN pumps with a minimum flow rate of 9,000 gpm each which provide the required dilution water needed for a release. Each release path has a radiation monitor (EMF) that is used to monitor the liquid effluent (See Figure 2.0-2).

To comply with Technical Specifications and Selected Licensee Commitments, and to assure that the concentration of radioactive liquid effluents released from the site to the unrestricted area is limited to 10 times the effluent concentrations (ECs) of 10CFR20, Appendix B, Table 2, Column 2, and 2.0E-04 µCi/ml for dissolved and entrained noble gases, the following release rate limit calculation shall be performed for liquid releases to Lake Wylie via the RL/RN discharge point:

$$f \leq F \div (DF - 1) \quad \text{Condition: } DF > 1.0 \qquad \text{Equation 2.1}$$

where:

f = the undiluted effluent flow, in gpm.

F = the dilution flow available depending on the number of RL/RN pumps in service, in gpm for batch releases, e.g., Waste Monitor Tank.

DF = required dilution factor to be applied to the undiluted effluent flow, unitless.

$$DF = s \times \sum_{i} \frac{C_i}{(10 \times EC_i)} \qquad \text{Equation 2.2}$$

Note:

If $DF \leq 1.0$ then no dilution is required and the release rate is unrestricted.

If $DF > 1.0$ then dilution flow is required and the release rate is calculated using Equation 2.1. Equation 2.1 is used only when DF > 1.0.

σ = the most restrictive recirculation factor at equilibrium, (dimensionless). The recirculation factor accounts for the fraction of discharged water reused by the station. For Catawba the recirculation factor equals 1.0 since discharged liquid effluent is not reused by the station.

C_i = the concentration of radionuclide, 'i', in the undiluted liquid effluent, in µCi/ml.

EC_i = the concentration of radionuclide, 'i', from 10CFR20, Appendix B, Table 2, Column 2, in µCi/ml. Note: if radionuclide, 'i', is a dissolved noble gas, then EC_i = 2.00E-05 µCi/ml.

2.0.1.2 WC DISCHARGE CONTINUOUS RELEASES

Liquid releases to Lake Wylie via the WC discharge point normally contain little measurable activity above background. Although designed for continuous discharge, inputs to WC, primarily from the Unit 1 and Unit 2 turbine building sumps, are normally held up in one of three WC Ponds, then released as a batch. There is a composite sampler at the discharge to the lake. An EMF monitors the TBS/Condenser Drain output (See Figure 2.0-2). It is assumed that no activity is present in the TBS effluent until indicated by radiation monitoring measurements. If radioactivity is detected above the monitor's alarm setpoint, an alternate discharge route may be used. A control room alarm indicates this radioactivity. At this time the discharge may be routed to the floor drain tank for processing or routed directly to the RL/RN discharge point rather than through WC. Liquid effluent releases through WC typically account for less than 1% of tritium releases from Catawba.

Figure 2.0-1 Liquid Radwaste Discharge Locations

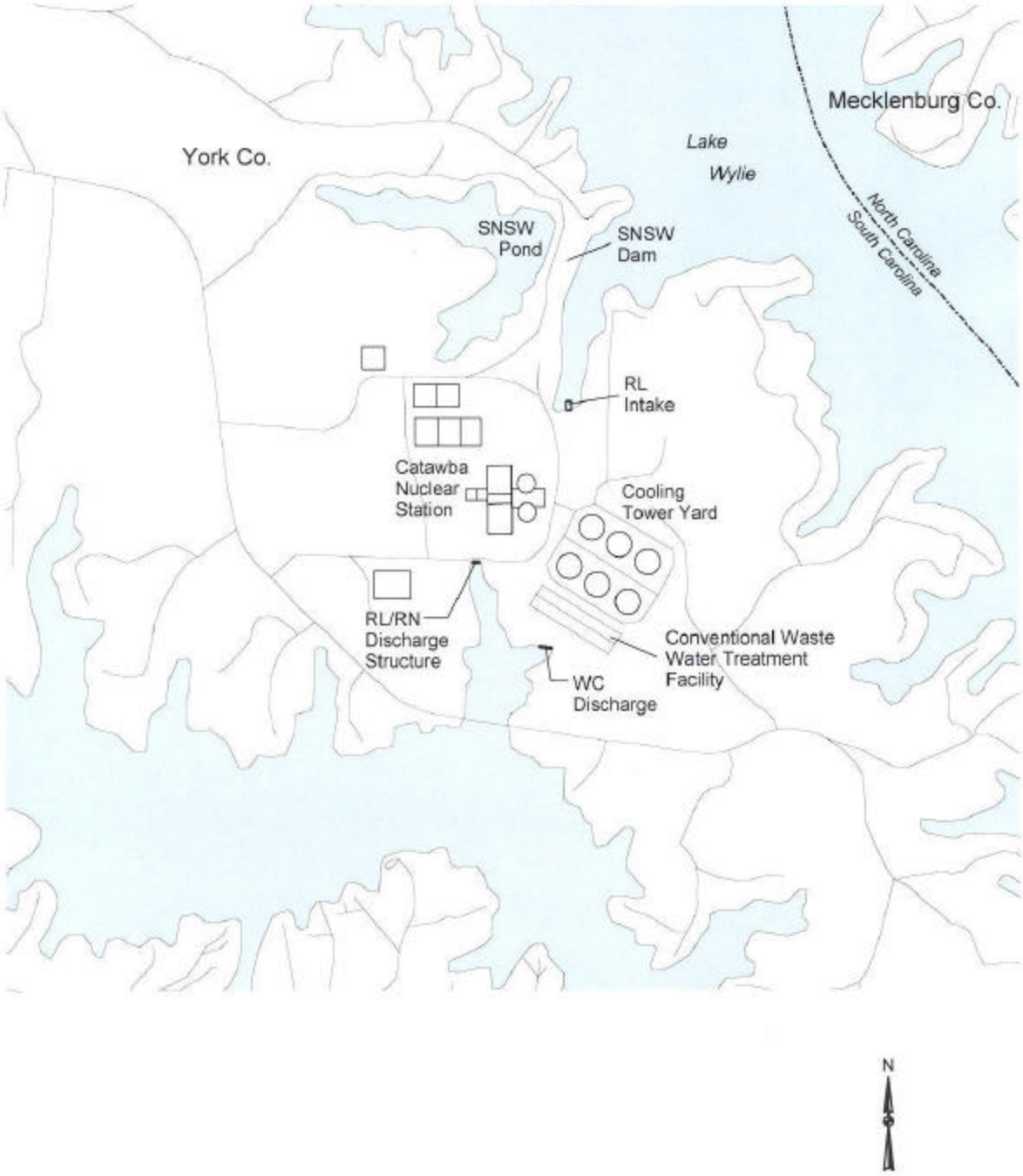

Figure 2.0-2 Liquid Radwaste Discharge to Lake Wylie

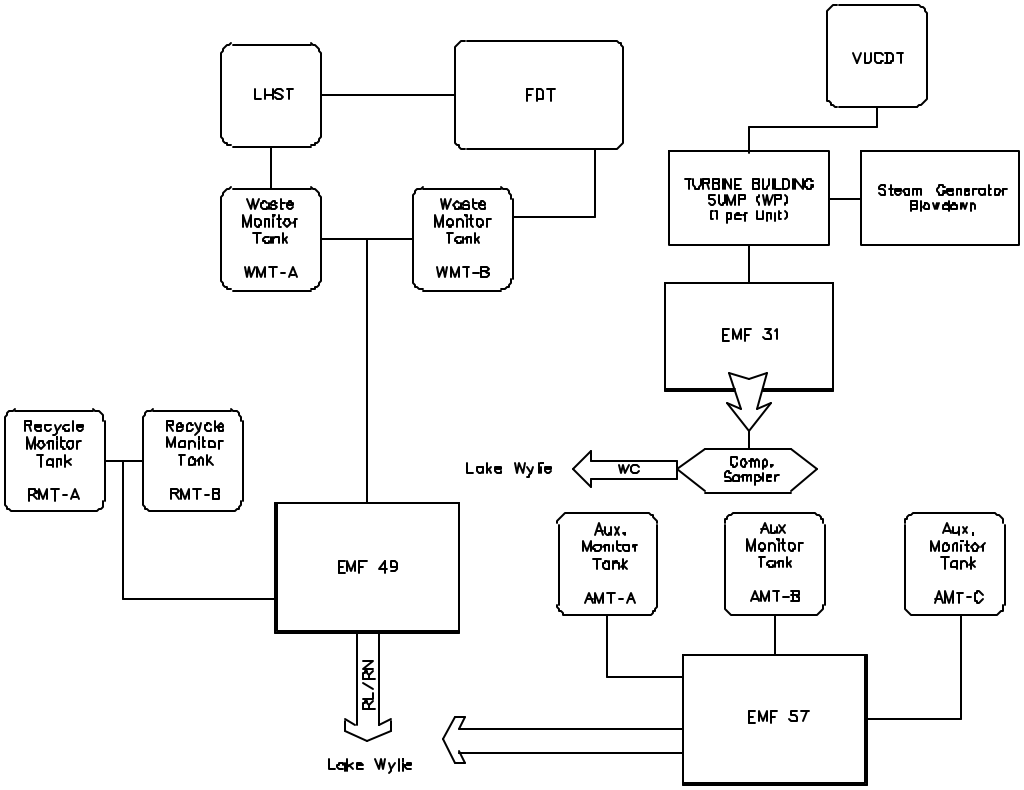

2.0.2 GASEOUS RELEASE RATE LIMIT CALCULATIONS

The two unit vents are the primary gaseous radioactive release points at Catawba. The unit vents are the release points for waste gas decay tanks, containment building purges, auxiliary building ventilation, and the condenser air ejector (see Figure 2.0-3). Each unit vent contains multi-range radiation monitors and flow rate measuring instrumentation.

There is one other separate gaseous effluent release point at Catawba, the Auxiliary Monitor Tank Building (AMTB), that is normally considered non-radioactive; that is, it is possible but unlikely that the effluent will contain measurable activity above background. However, the potential for release of radioactive effluents remains with certain job evolutions that may take place in the AMTB. The process areas of the AMTB ventilation pass through particulate and charcoal filters. The AMTB release point has an EMF, effluent sampler, and flow totalizer (see Figure 1.0-2).

2.0.2.1 UNIT VENT DISCHARGE RELEASE RATE LIMIT CALCULATION

In order to comply with Technical Specifications and SLCs and to assure that the dose rate, at any time, at or beyond the site boundary due to radioactive materials released in gaseous effluents from the site is limited to: ≤ 500 mrem/yr to the total body, and ≤ 3000 mrem/yr to the skin for the noble gases, and is limited to ≤ 1500 mrem/yr to any organ for radioiodine and for radioactive materials in particulate form, and radionuclides other than noble gases with half lives greater than 8 days, the following release rate and radiation monitor setpoint calculations shall be performed for releases from the waste gas decay tanks and the containment building. The release rate calculations when solved for the flow rate,'f', are the release rates for noble gases and for radioiodines, particulates and other radionuclides with half-lives greater than 8 days. The most conservative release rate calculated shall control the flow rate. The following equations are based on the site dose rate limits. When applied to the individual release points the site dose rate values are apportioned 49% to each unit vent, and 2% to the AMTB vent assuring that simultaneous releases from all release points do not exceed the controlling release rate for a single point.

a. Noble Gases

Total Body:

$$\sum_i \left(K_i \times \frac{c}{Q} \times Q_i \right) < 500 \text{ mrem/yr} \qquad \text{Equation 2.3}$$

Skin:

$$\sum_i \left((L_i + 1.1 M_i) \times \frac{c}{Q} \times Q_i \right) < 3000 \text{ mrem/yr} \qquad \text{Equation 2.4}$$

b. Radioiodines, Particulates, and Others

Inhalation and Ingestion Organ Pathways:

$$\sum_{p} \sum_{i} \left(P_{opi} \times W \times Q_i \times E_i \right) < 1500 \text{ mrem/yr}$$

To include both the food and ground organ dose and the inhalation organ dose the equation can be expanded to:

$$\sum_{p} \sum_{i} \left(\left\{ \left(P_{opi} \right)_{\text{food/gr}} \times W_{D/Q} + \left(P_{opi} \right)_{\text{inhal}} \times W_{c/Q} \right\} \times Q_i \times E_i \right) < 1500 \text{ mrem/yr}$$

Equation 2.5

where:

K_i = the total body dose factor due to gamma emissions for each identified noble gas radionuclide, 'i', in mrem/yr per μCi/m^3 (See Appendix A).

L_i = the skin dose factor due to beta emissions for each identified noble gas radionuclide, 'i', in mrem/yr per μCi/m^3 (See Appendix A).

M_i = the air dose factor due to gamma emissions for each identified noble gas radionuclide, 'i', in mrad/yr per μCi/m^3 (See Appendix A).

P_{opi} = the dose parameter for radionuclides other than noble gases for the inhalation pathway, in mrem/yr per μCi/m^3 and for the food and ground plane pathways in (m^2 × (mrem/yr per μCi/sec)) for organ, 'o', and radionuclide, 'i', (See Appendix B for the pathway specific dose commitment factors). Note: NUREG-0133, page 25, specifies use of the Infant age group for the P_{opi} values. For the H-3 milk pathway, the χ/Q value is used in Equation 2.5 rather than the D/Q value.

c/Q = the highest calculated annual average dispersion parameter for any area at or beyond the site boundary in sec/m^3. For Catawba this value is 3.510E-5 sec/m^3. The location is the NNE sector at 0.5 mile. As discussed in Catawba UFSAR Section 2.1.1.3, the boundary for establishing gaseous effluent release limits is the exclusion area boundary (EAB). The EAB is defined as a 2500-ft. (~0.5 mile) radius from the station center.

W = the highest calculated annual average dispersion or deposition parameter for estimating the maximum dose rate to an individual from the total inhalation, food, and ground plane pathways:

$W_{c/Q}$ = 3.510E-5 sec/m^3, for the inhalation pathway and the H-3 milk pathway. The location is the NNE sector at 0.5 mile.

$W_{D/Q}$ = 1.078E-7 m^{-2}, for the food and ground plane pathways. The location is the NNE sector at 0.5 mile.

E_i = the filter removal factor for radionuclide, 'i', e.g., for 99% removal E_i = 0.01.

Q_i = the release rate of radionuclide, 'i', in gaseous effluent from all release points at the site, in µCi/sec.

$$Q_i = k_1 C_i f \div k_2 = 4.72\text{E}+02 \times C_i f \qquad \text{Equation 2.6}$$

where:

C_i = the concentration of radionuclide, 'i', in undiluted gaseous effluent, in µCi/ml.

f = the undiluted effluent flow, in ft^3/min.

k_1 = conversion factor, 2.83E+04 cc/ft^3.

k_2 = conversion factor, 6.0E+01 sec/min.

Substituting the expression for Q_i in Equation 2.6 into Equations 2.3, 2.4, and 2.5, and solving for the flow rate, 'f', in each equation gives:

Noble Gases - Total Body Maximum Release Rate:

$$f_{tb} < \frac{500}{4.72\text{E}+02 \times c/Q \times \sum_{\text{i}} \left(K_i \times C_i\right)}$$

Noble Gases - Skin Maximum Release Rate:

$$f_{sk} < \frac{3000}{4.72\text{E}+02 \times c/Q \times \sum_{\text{i}} \left[\left(L_i + 1.1M_i\right) \times C_i\right]}$$

Radioiodines, Particulates, and Others - Organ Maximum Release Rate:

$$f_{or} < \frac{1500}{4.72\text{E}+02 \times \sum_{p} \sum_{i} \left(\left\{\left(P_{opi}\right)_{food/gr} \times W_{D/Q} + \left(P_{opi}\right)_{inhal} \times W_{c/Q}\right\} \times E_i \times C_i\right)}$$

f_{tb}, f_{sk}, and f_{or}, are calculated for each batch prior to release. The most limiting gaseous release rate is used to assure that no instantaneous dose rate limit is exceeded.

Figure 2.0-3 Unit Vent Release Points

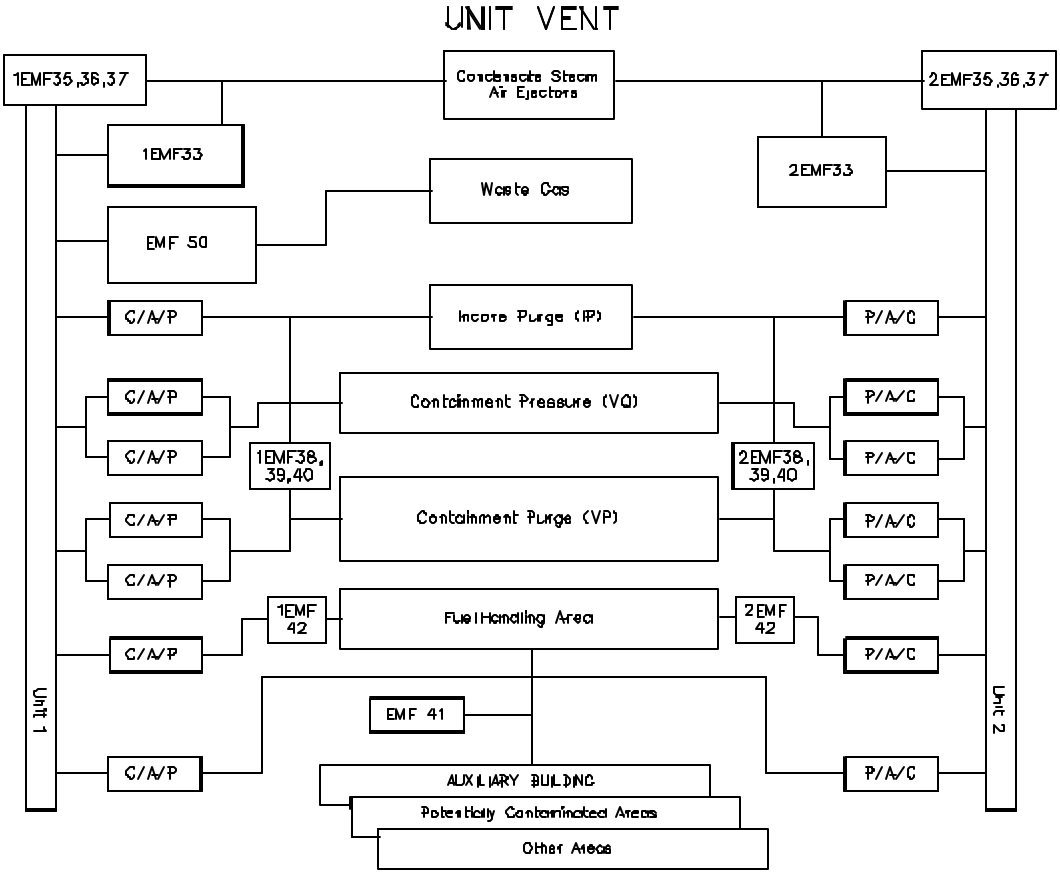

Derivations of Iodine, Particulate, and H-3 Dose Commitment Factors (P_{opi})

Ground Plane Deposition Pathway - Infant Age Group

$$P_{opi} = K'K''DFG_{oi}\left[\frac{(1-e^{-l_i t})}{l_i}\right]$$

Formula: from NUREG-0133, pages 25 and 26.	
Where:	
P_{opi}	Dose commitment factor for infant age group, organ o, nuclide i, for ground plane deposition pathway (m^2·mrem/yr per µCi/sec). (See Appendix B for the pathway specific dose commitment factors). Note: As tritium is a weak beta emitter, the ground plane contribution is 0 for tritium (from NUREG-0133).
K'	Units conversion factor pCi/µCi (10^6).
K"	Units conversion factor 8760 hr/year.
DFG_{oi}	Ground plane dose conversion factor for organ o, nuclide i (mrem/hr per pCi/m^2), from Table E-6 of Regulatory Guide 1.109.
λ_i	Nuclide decay constant for nuclide i (sec^{-1}).
t	Exposure time, 3.15×10^7 seconds (1 year) (from NUREG-0133).

Inhalation Pathway - Infant Age Group

$$P_{opi} = K'(BR)(DFA_{oi})$$

Formula: from NUREG-0133, page 25.	
Where:	
P_{opi}	Dose commitment factor for infant age group, organ o, nuclide i, for the inhalation pathway (mrem/yr per µCi/m^3). (See Appendix B for the pathway specific dose commitment factors).
K'	Units conversion factor pCi/µCi (10^6).
BR	Breathing rate for the infant age group (m^3/yr, from Regulatory Guide 1.109): Infant – 1400
DFA_{oi}	Organ inhalation factor dose conversion factor for organ o, nuclide i, age group a (mrem/pCi), from Table E-10 of Regulatory Guide 1.109.

Food - Cow Milk - Infant Age Group

$$P_{opi} = K'(r) \frac{Q_F (U_p)}{Y_p (l_i + l_w)} F_{mi} (DFL_{oi}) e^{-l_i t_f}$$

Formula: from NUREG-0133, pages 26 and 27.	
Where:	
P_{opi}	Dose commitment factor for infant age group, organ o, nuclide i, for food pathway (m^2·mrem/yr per µCi/sec). (See Appendix B for the pathway specific dose commitment factors).
K'	Units conversion factor pCi/µci (10^6).
Q_F	Cow consumption rate (50 kg/day, from Regulatory Guide 1.109).
U_p	Consumption rate of cow milk for the infant age group (liters/yr, from NUREG-0133, page 27). Infant – 330
r	Fraction of deposited activity retained on cow's feed grass (from Regulatory Guide 1.109. 1.0 for radioiodine. 0.2 for particulates.
Y_p	Agricultural productivity by unit area of pasture feed grass (0.7 kg/m^2, from Regulatory Guide 1.109).
λ_i	Nuclide decay constant for nuclide i (sec^{-1}).
λ_w	Decay constant for removal of activity on leaf and plant surfaces by weathering (5.73×10^{-7} sec^{-1}, from NUREG-0133).
DFL_{oi}	Ingestion dose conversion factor for nuclide i, organ o, from Table E-14 of Regulatory Guide 1.109 (mrem/pCi).
F_{mi}	Stable element transfer coefficient for nuclide i, in days/liter, from Table E-1 of Regulatory Guide 1.109 for cow milk.
t_f	Transport time from pasture to cow, to milk, to infant (1.73E+05 seconds, from Regulatory Guide 1.109).

Food – Tritium - Cow Milk - Infant Age Group

$$P_{opi} = K'K''F_{mi}Q_f U_p (DFL_{oi}) \left[0.75 (0.5 / H)\right]$$

Formula: from NUREG-0133, page 27.	
Where:	
P_{opi}	Dose commitment factor for infant age group, organ o, nuclide i, for the grass/cow/milk pathway (mrem/yr per µCi/m^3). (See Appendix B the pathway specific dose commitment factors).
K'	Units conversion factor pCi/µCi (10^6).
K"	Units conversion factor gm/kg (10^3).
Q_F	Cow consumption rate (50 kg/day, from Regulatory Guide 1.109).
U_p	Consumption rate of cow milk for the infant age group (liters/yr, from NUREG-0133, page 27). Infant – 330
DFL_{oi}	Ingestion dose conversion factor for nuclide i, organ o, from Table E-14 of Regulatory Guide 1.109 (mrem/pCi).
F_{mi}	Stable element transfer coefficient for nuclide i, in days/liter, from Table E-1 of Regulatory Guide 1.109 for cow milk.
0.75	Fraction of total feed that is water. (From NUREG-0133).
0.5	Ratio of specific activity of feed grass water to atmospheric water. (From NUREG-0133).
H	Absolute humidity of the atmosphere (8 gm/m^3, from Regulatory Guide 1.109).

3.0 SETPOINT CALCULATIONS

3.0.1 LIQUID RADIATION MONITOR SETPOINT CALCULATIONS

Once the liquid release rate parameters have been established radiation monitor setpoints shall be calculated to assure that the concentration of radioactive liquid effluents released from the site to the unrestricted area is limited to ten times the effluent concentrations (ECs) of 10CFR20, Appendix B, Table 2, Column 2, and 2.0E-04 µCi/ml for dissolved and entrained noble gases. By substituting the dilution factor (DF) from Equation 2.2 into Equation 2.1, solving for the undiluted liquid effluent concentration, C_i, and accounting for the monitor background reading, the liquid radiation monitor setpoint can be readily obtained by multiplying C_i by the radiation monitor correlation factor, CF_i, as follows:

$$C_i \leq \frac{(F + f) \times (10 \times EC_i)}{s \times f} \qquad \text{Equation 3.1}$$

$$SP \leq \sum_i (C_i \times CF_i) + bkg \qquad \text{Equation 3.2}$$

where:

C_i = the maximum allowable concentration of radionuclide, ‘i’, in the undiluted liquid effluent, in µCi/ml.

SP = radiation monitor setpoint, in cpm.

CF_i = radiation monitor correlation factor for radionuclide, ‘i’, in cpm/µCi/ml.

bkg = background reading for the radiation monitor, in cpm.

All other parameters were previously defined.

Using conservative or "worst-case" parameters in Equation 3.1 and Equation 3.2 can provide a liquid radiation monitor setpoint that does not need to be revised for every release if activity is low enough to allow for this type of operation. Prior to the release to assure that the standard setpoints will not be exceeded for the batch release, the "Expected cpm" is calculated. In general, liquid radiation monitors are calibrated to Cs-137, and their "Expected cpm" is calculated as follows:

$$C_{Cs-137} = \sum_i (C_i \times Eq_i)$$

$$Expected\ cpm = (C_{Cs-137} \times CF_{Cs-137}) + bkg \qquad \text{Equation 3.3}$$

where:

$C_{Cs\text{-}137}$ = Cs-137 equivalent concentration, in µCi/ml.

Eq_i = Cs-137 equivalence factor for each isotope, excluding tritium, to that of Cs-137 due to different gamma energies and abundance. (See Table 3.0-1 and Table 3.0-2).

All other parameters were previously defined.

3.0.1.1 WMT, RMT, AND AMT SETPOINTS (EMF 49 AND EMF 57)

As shown on Figure 2.0-2, EMF 49 is the controlling radiation monitor for Waste Monitor Tank (WMT) and Recycle Monitor Tank (RMT) releases, and EMF 57 is the controlling radiation monitor for Auxiliary Monitor Tank (AMT) releases. As discussed previously, standard setpoints are calculated for EMF 49 and EMF 57 based on "worst-case" parameters using Equation 3.1 and Equation 3.2 as follows:

$$C_i \leq \frac{(F + f) \times (10 \times EC_i)}{s \times f}$$

$$C \leq \frac{(25{,}500 + 100) \times (7 \times 9.0E\text{-}07)}{1.0 \times 100} \leq 1.613E-03\ \mu\text{Ci/ml}$$

$$SP \leq \sum_i (C_i \times CF_i) + bkg$$

$$Trip\ 2 \cong 1.613E-03 \times 8.00E+07 \cong 1.29E+05\ \text{cpm}$$

A Trip 2 setpoint of 1.20E+05 cpm is used for conservatism.

$$Trip\ 1 = Trip\ 2 \times 0.7 = 8.40E+04\ \text{cpm}$$

Where:

25,500 = RL/RN minimum dilution flow available (gpm).

100 = Flow from WMT, RMT, or AMT (gpm).

7 = 10CFR20, Appendix B, Table 2, Column 2, EC multiplier used for instantaneous liquid release rate concentration limit. Technical Specifications allow a multiplier of 10. A value of 7 is used for added conservatism.

9.0E-07 = EC for Cs-134 which is the lowest effluent concentration value for any detectable radionuclide not known to be absent from the liquid effluent (µCi/ml).

1.0 = The recirculation value for Catawba (unitless).

8.00E+07 = The most restrictive radiation monitor correlation value between EMF 49 (3.45E+08 cpm/µCi/ml) and EMF 57 (8.00E+07 cpm/µCi/ml).

Prior to the release to assure that the standard Trip 1 and Trip 2 setpoints are not exceeded for the batch release, the "Expected cpm" is calculated based on actual tank activity as previously shown in Equation 3.3. For the "Expected cpm" calculation the applicable EMF 49 or EMF 57 correlation value is used rather than the most restrictive value.

3.0.1.2 TURBINE BUILDING SUMP TO WC SETPOINTS (EMF 31)

As shown on Figure 2.0-2, EMF 31 is the controlling radiation monitor for releases from the Turbine Building Sump (TBS) to the Conventional Waste Water Treatment System (WC). EMF 31 setpoints are used to terminate the release to WC if there is any detectable activity in the effluent. The setpoints are calculated using Equation 3.2 as follows:

$$Trip\ 2 = 1.0E-06 \times 3.45E+08\ +\ \text{bkg}$$

$$Trip\ 1\ =\ Trip\ 2 \times\ 0.7$$

where:

1.0E-06 = Minimum detectable Cs-137 equivalent concentration, in µCi/ml.

3.45E+08 = EMF 31 Cs-137 correlation factor, in cpm/µCi/ml.

bkg = Background reading from EMF 31.

To assure that the standard Trip 1 and Trip 2 setpoints are not exceeded for TBS releases, the "Expected cpm" is calculated based on actual TBS sample activity as previously shown in Equation 3.3.

Table 3.0-1

EMF 49 and EMF 31 Cs-137 Equivalence Factors

Isotope	Equivalence Factor	Isotope	Equivalence Factor	Isotope	Equivalence Factor
Be-7	0.1282	Mo-99	0.3135	La-141	0.0132
F-18	0.5238	Tc-99m	0.5788	La-142	0.2785
Na-24	1.3013	Tc-101	0.00	Ce-141	0.4966
Cl-38	0.0068	Ru-103	1.1798	Ce-143	0.7066
K-40	0.0913	Ru-105	0.8673	Ce-144	0.1321
Cr-51	0.1207	Ru-106	0.4097	I-130	3.1610
Mn-54	1.0871	Ag-108m	3.2676	I-131	1.2074
Mn-56	0.4826	Ag-110m	3.5043	I-132	1.0137
Fe-59	0.9915	Cd-115	0.4739	I-133	1.0971
Co-57	0.8892	Cd-115m	0.0228	I-134	0.1396
Co-58	1.4883	In-115m	0.3048	I-135	0.8432
Co-60	1.8564	Sb-122	0.8691	Ar-41	0.1987
Cu-64	0.3577	Sb-124	2.0195	Kr-85	0.0054
Ni-65	0.1389	Sb-125	1.0467	Kr-85m	0.5240
Zn-65	0.5278	Sb-126	5.0018	Kr-87	0.1020
Zn-69m	0.9788	Sn-113	0.8413	Kr-88	0.4607
Se-75	1.9710	Sn-123	0.0062	Kr-89	0.00
Br-80m	0.0821	Sn-126	0.1747	Xe-131m	0.0211
Br-82	3.3664	Te-125m	0.0023	Xe-133	0.0520
Br-83	0.0054	Te-127	0.0116	Xe-133m	0.1176
Br-84	0.0056	Te-127m	0.0005	Xe-135	0.8334
Br-85	0.00	Te-129	0.0122	Xe-135m	0.00
Rb-86	0.0873	Te-129m	0.0526	Xe-137	0.00
Rb-88	0.00	Te-131	0.0016	Xe-138	0.00
Rb-89	0.00	Te-131m	1.9281	Nd-147	0.3706
Sr-89	0.0002	Te-132	1.0302	Hf-181	1.7053
Sr-91	0.6398	Te-134	0.0402	W-187	0.8499
Sr-92	0.3415	Cs-134	2.5843	Tl-208	0.00
Y-91	0.0028	Cs-136	3.1799	Bi-212	0.0140
Y-91m	0.0403	Cs-137	1.00	Bi-214	0.0003
Y-92	0.1281	Cs-138	0.0110	Pb-212	0.4507
Y-93	0.1009	Ba-133	1.2331	Pb-214	0.0018
Zr-95	1.1163	Ba-139	0.0255	Ra-226	0.0386
Zr-97	1.1163	Ba-140	0.5022	Ac-228	0.8370
Nb-95	1.1114	Ba-141	0.0002	Th-228	0.0090
Nb-95m	0.2929	Ba-142	0.00	Np-239	0.8989
Nb-97	0.1164	La-140	2.0586		

Table 3.0-2

EMF 57 Cs-137 Equivalence Factors

Isotope	Equivalence Factor	Isotope	Equivalence Factor	Isotope	Equivalence Factor
Be-7	0.1462	Mo-99	0.2668	La-141	0.0155
F-18	0.5788	Tc-99m	0.00	La-142	0.2942
Na-24	0.8519	Tc-101	0.00	Ce-141	0.00
Cl-38	0.0090	Ru-103	1.3368	Ce-143	0.7826
K-40	0.1094	Ru-105	0.8783	Ce-144	0.0273
Cr-51	0.1438	Ru-106	0.4429	I-130	3.3095
Mn-54	1.0617	Ag-108m	3.4473	I-131	1.4051
Mn-56	0.4992	Ag-110m	3.5179	I-132	1.0259
Fe-59	1.0556	Cd-115	0.5201	I-133	1.1857
Co-57	0.0022	Cd-115m	0.0235	I-134	0.1388
Co-58	1.4735	In-115m	0.3631	I-135	0.9374
Co-60	2.0495	Sb-122	0.9218	Ar-41	0.2229
Cu-64	0.3954	Sb-124	2.1617	Kr-85	0.0059
Ni-65	0.1591	Sb-125	1.1308	Kr-85m	0.4280
Zn-65	0.5584	Sb-126	5.1762	Kr-87	0.1213
Zn-69m	1.1391	Sn-113	0.9971	Kr-88	0.5278
Se-75	1.3092	Sn-123	0.0066	Kr-89	0.00
Br-80m	0.0860	Sn-126	0.00	Xe-131m	0.0167
Br-82	3.4691	Te-125m	0.00	Xe-133	0.0006
Br-83	0.0059	Te-127	0.0134	Xe-133m	0.1172
Br-84	0.0053	Te-127m	0.0001	Xe-135	0.8564
Br-85	0.00	Te-129	0.0138	Xe-135m	0.00
Rb-86	0.0894	Te-129m	0.0507	Xe-137	0.00
Rb-88	0.00	Te-131	0.0008	Xe-138	0.00
Rb-89	0.00	Te-131m	1.8463	Nd-147	0.2619
Sr-89	0.0002	Te-132	0.9766	Hf-181	1.4209
Sr-91	0.6460	Te-134	0.0408	W-187	0.8027
Sr-92	0.3900	Cs-134	2.5804	Tl-208	0.00
Y-91	0.0031	Cs-136	3.1916	Bi-212	0.0144
Y-91m	0.0439	Cs-137	1.00	Bi-214	0.0003
Y-92	0.1334	Cs-138	0.0120	Pb-212	0.4497
Y-93	0.1091	Ba-133	1.3648	Pb-214	0.0020
Zr-95	1.0909	Ba-139	0.0203	Ra-226	0.0320
Zr-97	1.1210	Ba-140	0.5307	Ac-228	0.8261
Nb-95	1.0821	Ba-141	0.0002	Th-228	0.0038
Nb-95m	0.2919	Ba-142	0.00	Np-239	0.3996
Nb-97	0.1164	La-140	2.3237		

3.0.2 GASEOUS RADIATION MONITOR SETPOINT CALCULATIONS

In general, gaseous radiation monitors (EMFs) are calibrated to Xe-133, and for continuous release points, e.g., the two unit vents, are preset at a maximum value based on the 500 mrem/year total body gaseous release rate limit according to the following methodology. Note: when applied to the individual release points the 500 mrem/year site dose rate value is apportioned 49% to each unit vent and 2% to the Auxiliary Monitor Tank Building.

$$K_{Xe-133} \times c/Q \times Q_{Xe-133} < 500 \text{ mrem/yr}$$

Solve for Q_{Xe-133}:

$$Q_{Xe-133} < \frac{500}{K_{Xe-133} \times c/Q} \qquad \text{Equation 3.4}$$

From Equation 2.6:

$$Q_{Xe-133} = 4.72\text{E}+02 \times C_{Xe-133} \times f \qquad \text{Equation 3.5}$$

Substitute Equation 3.5 into Equation 3.4:

$$4.72\text{E}+02 \times C_{Xe-133} \times f < \frac{500}{K_{Xe-133} \times c/Q}$$

Solve for C_{Xe-133}:

$$C_{Xe-133} < \frac{500}{4.72\text{E}+02 \times f \times K_{Xe-133} \times c/Q}$$

$$SP = (C_{Xe-133} \times CF) + bkg \qquad \text{Equation 3.6}$$

where:

K_{Xe-133} = 2.94E+02, the total body dose factor due to gamma emissions for Xe-133, in mrem/year per μCi/m^3 (See Appendix A).

χ/Q = the highest calculated annual average dispersion parameter for any area at or beyond the site boundary in sec/m^3. For Catawba this value is 3.510E-5 sec/m^3. The location is the NNE sector at 0.5 mile.

Q_{Xe-133} = Xe-133 equivalent release rate limit for the noble gas total body dose pathway, in μCi/sec.

4.72E+02 = conversion factor, (cc/ft^3)/(sec/min).

$C_{Xe\text{-}133}$ = the maximum allowable Xe-133 equivalent concentration in the gaseous effluent, in µCi/cc.

f = the gaseous effluent flow from the tank, building, or vent, in ft^3/min.

SP = radiation monitor setpoint, in cpm.

CF = the Xe-133 equivalent monitor correlation factor, in cpm/µCi/cc.

bkg = the radiation monitor background reading, in cpm.

Equation 3.6 provides the methodology to calculate the maximum setpoint for continuous releases such as for the unit vent radiation monitor EMF 36. However, most gaseous releases at Catawba are batch releases, e.g., Containment Purge (VP), in which the radiation monitor setpoint is calculated based on actual activity expected in the release. For batch releases with a low activity release rate the expected monitor response is essentially no greater than background, and the trip setpoints are based on minimum detectable activity. For batch releases where the effluent can contain activity significantly above background the following setpoint methodology is used:

$$C_{Xe-133} = \sum_i \left(C_i \times Eq_i\right)$$

$$Expected\ Cpm = \left(C_{Xe-133} \times CF_{Xe-133}\right) + bkg \qquad \text{Equation 3.7}$$

"Trip" setpoints are set based on a multiplier factor above the "expected" cpm calculated in Equation 3.7.

where:

$C_{Xe\text{-}133}$ = Xe-133 equivalent concentration, in µCi/ml.

Eq_i = Xe-133 equivalence factor for each isotope, excluding tritium, to that of Xe-133 due to different beta energies and abundance. (See Table 3.0-3).

All other parameters were previously defined.

3.0.2.1 CONTAINMENT AIR RELEASE AND ADDITION (VQ) SETPOINTS (EMF 39, EMF 36)

As shown on Figure 2.0-3, EMF 39 (when operable) and EMF 36 (when EMF 39 is inoperable) are the controlling radiation monitors for VQ releases from Containment to the Unit Vent. EMF 39 setpoints for VQ releases are calculated as follows:

$$Expected\ cpm = \left(C_{Xe-133} \times CF\right) + bkg$$

$$Trip\ 2 = \left(C_{Xe-133} \times CF \times 2.0\right) + bkg$$

$$Trip\ 1 = Trip\ 2 \times 0.7$$

Where CF for EMF 39 = 2.70E+07 cpm/ µCi/ml.

If the Xe-133 equivalent is ≤ 1.0E-05 µCi/ml, then 1.0E-05 µCi/ml is used in the Trip 1 and 2 setpoint calculations. This is an indication of low activity in containment, and normal EMF fluctuation may cause Trip 2 alarms and release termination. If EMF 39 is inoperable for a VQ release then the unit vent radiation monitor, EMF 36, is the controlling EMF for the release.

When EMF 36 must be used as the controlling monitor for VQ releases only the "expected" cpm is calculated, and the EMF counts are monitored manually during the VQ release. If the EMF 36 reading significantly exceeds the expected cpm then the release is manually terminated. The EMF 36 expected cpm from VQ activity is calculated as follows:

$$Expected\ cpm = \frac{350\ \text{cfm} \times C_{Xe-133} \times CF_{Xe-133}}{F_{UV}} + \text{bkg}$$

where:

C_{Xe-133} = Xe-133 equivalent concentration, in µCi/ml.

CF_{Xe-133} = EMF 36 Xe-133 correlation factor, 2.70E+07 cpm/µCi/ml.

bkg = Background reading from EMF 36.

350 cfm = Maximum VQ flow rate.

F_{UV} = Current Unit Vent flow rate.

3.0.2.2 CONTAINMENT PURGE (VP) AND INCORE PURGE (IP) SETPOINTS (EMF 39, EMF 36)

As shown on Figure 2.0-3 EMF 39 (when operable) and EMF 36 (when EMF 39 is inoperable) are the controlling radiation monitors for VP and IP releases from Containment to the Unit Vent.

EMF 39 setpoints for VP and IP releases are calculated as follows:

$$Expected\ cpm = \left(C_{Xe-133} \times CF\right) + bkg$$

$$Trip\ 2 = \left(C_{Xe-133} \times CF \times 2.0\right) + bkg$$

$$Trip\ 1 = Trip\ 2 \times 0.7$$

Where CF for EMF 39 = 2.70E+07 cpm/ µCi/ml.

If the Xe-133 equivalent is ≤ 6.45E-04 µCi/ml, then 6.45E-04 µCi/ml is used in the Trip 1 and 2 setpoint calculations. A Xe-133 equivalent concentration of 6.45E-04 µCi/ml equates to a dose rate of approximately 5 mr/hr in containment. Typically the dose rate in containment during an outage is approximately 1 or 2 mr/hr, but the higher setpoint based on 5 mr/hr prevents spurious VP trips due to normal evolutions that can occur in containment during the course of an outage. If EMF 39 is inoperable for a VP or IP release then the unit vent radiation monitor, EMF 36, is the controlling EMF for the release.

When EMF 36 must be used as the controlling monitor for VP or IP releases only the "expected" cpm is calculated, and the EMF counts are monitored manually during the VP or IP release. If the EMF 36 reading significantly exceeds the expected cpm then the release is manually terminated. The EMF 36 expected cpm from VP or IP activity is calculated as follows:

$$Expected\ \text{cpm} = \frac{2.6E4\ \text{cfm} \times C_{Xe-133} \times CF_{Xe-133}}{F_{UV}} + \text{bkg}$$

where:

C_{Xe-133} = Xe-133 equivalent concentration, in µCi/ml.

CF_{Xe-133} = EMF 36 Xe-133 correlation factor, 2.70E+07 cpm/µCi/ml.

bkg = Background reading from EMF 36.

2.6E4 cfm = Maximum VP or IP flow rate.

F_{UV} = Current Unit Vent flow rate.

3.0.2.3 WASTE GAS DECAY TANK (WGDT) SETPOINTS (EMF 50, EMF 36)

As shown on Figure 2.0-3, EMF 50 (when operable) and EMF 36 (when EMF 50 is not operable) are the controlling radiation monitors for WGDT releases to the Unit Vent. EMF 50 setpoints are based on actual tank activity, and are calculated as follows:

$$Expected\ cpm = \left(C_{Xe-133} \times CF_{Xe-133}\right) + bkg$$

$$Trip\ 2\ setpoint = \left(C_{Xe-133} \times CF_{Xe-133} \times 2.0\right) + bkg$$

$$Trip\ 1 = Trip\ 2 \times 0.7$$

where:

C_{Xe-133} = Xe-133 equivalent concentration, in µCi/ml.

CF_{Xe-133} = EMF 50 Xe-133 correlation factor, 1.75E+08 cpm/µCi/ml.

bkg = Background reading from EMF 50.

If the Xe-133 equivalent concentration is ≤ 1.00E-05 µCi/ml, then 1.00E-05 is used in the Trip 1 and Trip 2 setpoint calculations. This is an indication of a low activity tank, and normal EMF fluctuation may cause Trip 2 alarms and release termination.

The unit vent gas radiation monitor, EMF 36, is used as the controlling monitor for WGDT releases if EMF 50 is inoperable. When EMF 36 must be used as the controlling monitor for WGDT releases only the "expected" cpm is calculated, and the EMF counts are monitored manually during the WGDT release. If the EMF 36 reading significantly exceeds the expected cpm then the release is manually terminated. The EMF 36 expected cpm from WGDT activity is calculated as follows:

$$Expected\ cpm = \frac{50\ cfm \times C_{Xe-133} \times CF_{Xe-133}}{F_{UV}} + bkg$$

where:

C_{Xe-133} = Xe-133 equivalent concentration, in µCi/ml.

CF_{Xe-133} = EMF 36 Xe-133 correlation factor, 2.70E+07 cpm/µCi/ml.

bkg = Background reading from EMF 36.

$50\ cfm$ = Maximum Waste Gas flow rate.

F_{UV} = Current Unit Vent (U1) flow rate.

Table 3.0-3

Xe-133 Equivalents

Isotope	Equivalence Factor
Kr-83m	0.0
Kr-85m	2.14
Kr-85	2.56
Kr-87	2.93
Kr-88	2.74
Kr-89	2.93
Kr-90	2.90
Xe-131m	1.65
Xe-133m	1.98
Xe-133	1.0
Xe-135m	0.56
Xe-135	2.63
Xe-137	2.93
Xe-138	2.93
Ar-41	2.93

4.0 EFFLUENT DOSE MODELS

The effluent dose models used to show compliance with 10CFR50, Appendix I ALARA design objectives, 40CFR190 fuel cycle dose limits, and the dose values given in station SLCs are based on the methodology given in NUREG-0133 and Regulatory Guide 1.109. Dose contributions to the maximum individual shall be calculated at least every 31 days, quarterly, and annually using the RETDAS computer code which implements the ODCM methodology. RETDAS, Radioactive Effluent Tracking and Dose Assessment Software, is a database application designed by Canberra Industries, Inc. to automate many of the tasks required in the administration of effluent releases at Catawba. RETDAS performs normal operation effluent dose assessment using NUREG-0133 and Regulatory Guide 1.109 methodology.

Station long-term historical and dose projection calculations are performed periodically to determine the station's status with respect to meeting annual ALARA goals specified in the Catawba SLCs. Such calculations are used to verify that adequate margin remains during a report period to allow normal station and radwaste system operation, including anticipated operational occurrences, for the remainder of the report period without exceeding applicable goals. Station 31-day dose projections that are used to assess the need to reduce effluent releases with the Gaseous Waste (WG) or Liquid Waste (WL) systems as required in the Catawba SLCs are estimated by the previous month's calculated dose results.

Fuel cycle dose calculations shall be performed annually or as required by special reports. Dose contributions shall be calculated using the RETDAS computer program.

4.0.1 LIQUID EFFLUENT DOSE MODEL FOR THE MAXIMUM EXPOSED INDIVIDUAL

Of the possible exposure pathways in the aquatic environment, only three contribute significantly to the total dose; these pathways are ingestion of potable water and aquatic foods, and direct exposure from radioactivity deposited on the shoreline. The dose contribution from these pathways for measured quantities of radioactive materials identified in liquid effluents released to unrestricted areas shall be calculated for the maximum exposed individual in each age group using the methodology provided in this section.

There are two liquid discharge points to the environment at Catawba; (1) the Low Pressure Service Water System (RL) and Nuclear Service Water System (RN) discharge point to Lake Wylie, and (2) the Conventional Waste Water Treatment System (WC) discharge point to Lake Wylie (See Figure 2.0-1). Liquid dose calculations for the maximum exposed individual are performed and documented in the Annual Effluent Release Report for both locations using the applicable activity release and dilution data

for each liquid effluent release point. The primary liquid effluent discharge point for Catawba is through RL/RN to Lake Wylie. In general, only low activity tritium releases (<1% station total) occur through the WC discharge point to Lake Wylie. Dose calculations are performed for each of the two liquid discharge points for dose reporting purposes. The highest calculated dose from the two dose calculations is used to define the maximum individual dose from liquid releases at Catawba.

Liquid Dose Calculations

The following equation is used for calculating liquid dose to the maximum exposed individual at each of the two liquid effluent release points:

$$Dose_{oa} = \sum_{p} \sum_{i} \left(A_{oapi} \times C_i \right) \times \Delta t \times F_n \times \frac{1}{D_w}$$

$$F_n = \frac{f}{f + F} \times \sigma$$

Formula: adapted from NUREG-0133, pages 15-17.

Where:

$Dose_{oa}$	The cumulative dose commitment for organ o and age group a, from the liquid effluent for the total time period, Δt. (mrem)	
A_{oapi}	Dose commitment factor for organ o, age group a, pathway p, and nuclide i (mrem/hr per μCi/ml). (See Appendices C through F for age group and pathway specific dose commitment factors).	
C_i	The average concentration of nuclide i, in undiluted liquid effluent during the time period, Δt. (μCi/ml)	
Δt	The length of time over which C_i and F_n are averaged for all liquid releases. (hr)	
F_n	The near field average dilution factor for C_i during the period of interest, Δt. Includes the recirculation factor. (dimensionless)	
f	Average liquid radwaste flow during the period of interest, Δt. (gpm)	
F	Average dilution flow during the period of interest, Δt. (gpm)	
σ	Recirculation factor.* (dimensionless)	
	Applies to potable water, aquatic foods, and shoreline sediment.	Value
	Lake Wylie (RL/RN primary discharge location)	1.0
	Lake Wylie (WC discharge location)	1.0
D_w	Dilution factor from the near field area to the potable water intake; **= 43.4** for Catawba. **This factor applies to the potable water pathway only.** The factor is calculated by (Average Wylie Dam Flow (4453 cfs) + Average Radwaste Flow (105 cfs)) divided by the (Average Radwaste Flow (105 cfs)). This value can be modified to account for deviations from average in a particular year or for added conservatism. A D_w value of **21.7** (half the historic average) is currently being used.	

* The recirculation factor accounts for the fraction of discharged water reused by the station. Liquid effluent discharge cannot be recirculated back into the Catawba station. Therefore, the recirculation factor is 1.0 at Catawba.

Derivation of Liquid Dose Commitment Factors (A_{oapi})

Potable Water

$$A_{oapi} = 1.14 \times 10^5 \times U_{aw} \times D_{aoi} \times e^{-\lambda_i t_p}$$

Formula: from NUREG-0133, page 16, and Regulatory Guide 1.109, page 1.109-12. Where:	
A_{oapi}	Dose commitment factor for organ o, age group a, pathway p, and nuclide i, (mrem/hr per μCi/ml). (See Appendices C through F for age group and pathway specific dose commitment factors).
1.14×10^5	Units conversion factor (pCi-yr-ml)/(μCi-hr-kg).
U_{aw}	Water consumption rate in liters per year for age group a. From Table E-5, Regulatory Guide 1.109. Adult – 730 Teen – 510 Child – 510 Infant – 330
D_{aoi}	Dose factor for age group a, organ o, nuclide i, in mrem/pCi. From tables E-11 through E-14 of Regulatory Guide 1.109.
λ_i	Decay constant for nuclide i, in sec^{-1}.
t_p	Environmental transit time from release to receptor. Default = 4.32E+04 sec (12 hours). From Regulatory Guide 1.109, Table E-15.

Aquatic Foods

$$A_{oapi} = 1.14 \times 10^5 \times U_{af} \times BF_i \times D_{aoi} \times e^{-\lambda_i t_p}$$

Formula: from NUREG-0133, page 16, and Regulatory Guide 1.109, page 1.109-12. Where:	
A_{oapi}	Dose commitment factor for organ o, age group a, pathway p, and nuclide i, (mrem/hr per μCi/ml). (See Appendices C through F for age group and pathway specific dose commitment factors).
1.14×10^5	Units conversion factor (pCi-yr-ml)/(μCi-hr-kg).
U_{af}	Fish consumption rate for age group a (kg/yr). From Table E-5, Regulatory Guide 1.109. Adult – 21 Teen – 16 Child – 6.9 Infant – 0
BF_i	Bioaccumulation factor for nuclide i, in fish, in units of pCi/kg per pCi/liter. From Table A-1 of Regulatory Guide 1.109.
D_{aoi}	Dose factor for age group a, organ o, nuclide i, in mrem/pCi. From tables E-11 through E-14 of Regulatory Guide 1.109.
λ_i	Decay constant for nuclide i, in sec^{-1}.
t_p	Environmental transit time from release to receptor. Default = 8.64E+04 sec (1 day). From Regulatory Guide 1.109, Table E-15.

Shoreline Sediment

$$A_{oapi} = 1.14 \times 10^5 \times 100 \times DFG_{oi} \times w \times U_{as} \times T_i^{\frac{1}{2}} \times e^{-\lambda_i t_p} \times (1 - e^{-\lambda_i t_b})$$

Formula: adapted from Regulatory Guide 1.109, page 1.109-14.	
Where:	
A_{oapi}	Dose commitment factor for organ o, age group a, pathway p, and nuclide i, (mrem/hr per μCi/ml). (See Appendices C through F for age group and pathway specific dose commitment factors).
1.14×10^5	Units conversion factor (pCi-yr-ml)/(μCi-hr-kg).
100	Proportionality constant used in the sediment radioactivity model, (liters/(m^2-day).
DFG_{oi}	Ground plane dose conversion factor for organ o, nuclide i (mrem/hr per pCi/m^2), from Table E-6 of Regulatory Guide 1.109.
w	Shoreline width factor. For Catawba = 0.3, from Table A-2, Regulatory Guide 1.109.
U_{as}	Shoreline exposure rate for age group a (hr/yr), From Table E-5, Regulatory Guide 1.109. Adult – 12 Teen – 67 Child – 14 Infant – 0
$T_i^{1/2}$	Nuclide half life for nuclide i, in days.
λ_i	Nuclide decay constant for nuclide i.
t_p	Average transit time to point of exposure (0 hours).
t_b	Sediment exposure time (15 years). Page 1.109-14.

4.0.2 GASEOUS EFFLUENT DOSE MODEL FOR THE MAXIMUM EXPOSED INDIVIDUAL

The dose contributions from measured quantities of radioactive materials identified in gaseous effluent released to unrestricted areas shall be calculated for the maximum gamma and beta air dose from noble gases, and for the maximum exposed individual from radioiodines, particulates, and others using the following equations:

Gaseous Dose Calculations

Noble Gas Dose Calculations

Gamma Air Dose

$$Dose_{\gamma} = 3.17\times10^{-8} \times \chi / Q \times \sum_{i} \left(M_i \times Q_i \right)$$

Formula: adapted from NUREG-0133, page 28.	
Where:	
$Dose_{\gamma}$	Gamma air dose for the time period of interest (mrad).
3.17×10^{-8}	Inverse number of seconds in year (year/seconds).
M_i	Gamma air dose factor due to gamma emissions for nuclide i (mrad/yr per μCi/m^3). (See Appendix A).
χ/Q	The highest calculated annual average relative concentration for any area at or beyond the site boundary (sec/m^3). (See Table 6.0-8).
Q_i	Activity for nuclide i released during the time period of interest (μCi).

Beta Air Dose

$$Dose_{\beta} = 3.17\times10^{-8} \times \chi / Q \times \sum_{i} \left(N_i \times Q_i \right)$$

Formula: adapted from NUREG-0133, page 28.	
Where:	
$Dose_{\beta}$	Beta air dose for the time period of interest (mrad).
3.17×10^{-8}	Inverse number of seconds in year (year/seconds).
N_i	Beta air dose factor due to beta emissions for nuclide i (mrad/yr per μCi/m^3). (See Appendix A).
χ/Q	The highest calculated annual average relative concentration for any area at or beyond the site boundary (sec/m^3). (See Table 6.0-8).
Q_i	Activity for nuclide i released during the time period of interest (μCi).

Iodine, Particulates, and H-3 Dose Organ Dose Calculation

$$Dose_{oa} = 3.17 \times 10^{-8} \times W \times \sum_{p} \sum_{i} \left(R_{oapi} \times Q_i \right)$$

Formula: adapted from NUREG-0133, pages 29 & 30.		
Where:		
$Dose_{oa}$	The cumulative dose commitment to the total body or any organ o, for an individual of age group a (mrem).	
3.17×10^{-8}	Inverse number of seconds in year (year/seconds).	
R_{oapi}	Dose commitment factor for organ o, age group a, pathway p, and nuclide i. The units are based on whether a dispersion or deposition factor is used. When a χ/Q is used the units are mrem/yr per μCi/m^3. When a D/Q is used the units are (m^2 · mrem/yr) per μCi/sec. (See Appendices G through J for age group and pathway specific dose commitment factors).	
W	Dispersion (χ/Q) or deposition factor (D/Q). The factor used is based upon the pathway. Note: χ/Q is always used for tritium.	
	Pathway	Factor Used
	Ground Plane Deposition	D/Q (m^{-2})
	Inhalation	χ/Q (sec/m^3)
	Vegetation	D/Q (m^{-2})
	Grass/Cow/Milk	D/Q (m^{-2})
	Grass/Goat/Milk	D/Q (m^{-2})
	Grass/Cow/Meat	D/Q (m^{-2})
Q_i	Activity for nuclide i, released during the time period of interest (μCi).	

Maximum individual organ dose is determined by calculating the organ dose at each of the χ/Q and D/Q locations shown in Table 6.0-8 and Table 6.0-9 (144 locations), and then choosing the maximum dose. Dose is calculated only for pathways (e.g., garden, milk animal, etc.) that actually exist at each location as determined by the land use census shown in Table 6.0-3. As discussed in Catawba UFSAR Section 2.1.1.3, the boundary for establishing gaseous effluent release limits is the exclusion area boundary (EAB). The EAB is defined as a 2500-ft. (~0.5 mile) radius from the station center.

Derivations of Iodine, Particulate, and H-3 Dose Commitment Factors (R_{oapi})

Ground Plane Deposition Pathway

$$R_{oapi} = K'K''(SF)DFG_{oi}\left[\frac{(1-e^{-\lambda_i t})}{\lambda_i}\right]$$

Formula: from NUREG-0133, page 32.	
Where:	
R_{oapi}	Dose commitment factor for organ o, age group a, nuclide i, for ground plane deposition pathway (m^2·mrem/yr per μCi/sec). (See Appendices G through J for age group and pathway specific dose commitment factors).
K'	Units conversion factor pCi/μCi (10^6).
K"	Units conversion factor 8760 hr/year.
SF	Shielding factor (dimensionless) (0.7, from Regulatory Guide 1.109).
DFG_{oi}	Ground plane dose conversion factor for organ o, nuclide i (mrem/hr per pCi/m^2), from Table E-6 of Regulatory Guide 1.109.
λ_i	Nuclide decay constant for nuclide i (sec^{-1}).
t	Exposure time, 4.73×10^8 seconds (15 years).

Inhalation Pathway

$$R_{oapi} = K'(BR_a)(DFA_{oi})_a$$

Formula: from NUREG-0133, page 31.	
Where:	
R_{oapi}	Dose commitment factor for organ o, age group a, nuclide i, for inhalation pathway (mrem/yr per μCi/m^3). (See Appendices G through J for age group and pathway specific dose commitment factors).
K'	Units conversion factor pCi/μCi (10^6).
BR_a	Breathing rate for age group (m^3/yr), from Regulatory Guide 1.109: Adult – 8000 Teen – 8000 Child – 3700 Infant – 1400
$(DFA_{oi})_a$	Organ inhalation factor dose conversion factor for organ o, nuclide i, age group a (mrem/pCi), from Tables E-7 through E-10 of Regulatory Guide 1.109.

Vegetation

$$R_{oapi} = K'\left[\frac{(r)}{Y_v(\lambda_i + \lambda_w)}\right] \times (DFL_{oi})_a \times \left[U_a^L f_L e^{-\lambda_i t_L} + U_a^S f_g e^{-\lambda_i t_h}\right]$$

Formula: from NUREG-0133, page 35. Where:	
R_{oapi}	Dose commitment factor for organ o, age group a, nuclide i, for vegetation pathway (m^2·mrem/yr per μCi/sec). (See Appendices G through J for age group and pathway specific dose commitment factors).
K'	Units conversion factor pCi/μCi (10^6).
r	Fraction of deposited activity retained on vegetation, from Regulatory Guide 1.109. 1.0 for radioiodine. 0.2 for particulates.
Y_v	Vegetation areal density (kg/m^2) (2.0, from Regulatory Guide 1.109).
λ_i	Nuclide decay constant for nuclide i (sec^{-1}).
λ_w	Decay constant for removal of activity on leaf and plant surfaces by weathering (5.73×10^{-7} sec^{-1}, from NUREG-0133).
$(DFL_{oi})_a$	Ingestion dose conversion factor for nuclide i, organ o, and age group a, from Tables E-11 through E-14 of Reg. Guide 1.109 (mrem/pCi).
U^L_a	Consumption rate of fresh vegetation for age group a (kg/yr) (from Regulatory Guide 1.109). Adult – 64 Teen – 42 Child – 26 Infant – 0
f_L	Fraction of annual intake of fresh leafy vegetation grown locally (1.0, from NUREG-0133).
t_L	Average time between harvest of leafy vegetation and consumption (8.6×10^4 seconds, (1 day), from Regulatory Guide 1.109).
U^S_a	Consumption rate of stored vegetation for age group a (kg/yr) (from Regulatory Guide 1.109). Adult – 520 Teen – 630 Child – 520 Infant – 0
f_g	Fraction of annual intake of stored vegetation (0.76, from Regulatory Guide 1.109).
t_h	Average time between harvest of stored vegetation and consumption (5.18×10^6 seconds, (60 days), from Regulatory Guide 1.109).

Vegetation – Tritium

$$R_{oapi} = K' K'' \left[U_a^L f_L + U_a^S f_g \right] (DFL_{oi})_a \left[0.75 (0.5 / H) \right]$$

Formula: from NUREG-0133, page 36.	
Where:	
R_{oapi}	Dose commitment factor for organ o, age group a, for vegetation pathway and tritium (mrem/yr per μCi/m^3). (See Appendices G through J for age group and pathway specific dose commitment factors).
K'	Units conversion factor pCi/μCi (10^6).
K'''	Units conversion factor gm/kg (10^3).
U^L_a	Consumption rate of fresh vegetation for age group a (kg/yr) (from Regulatory Guide 1.109). Adult – 64 Teen – 42 Child – 26 Infant – 0
f_L	Fraction of annual intake of fresh leafy vegetation grown locally (1.0, from NUREG-0133).
U^S_a	Consumption rate of stored vegetation for age group a (kg/yr) (from Regulatory Guide 1.109). Adult – 520 Teen – 630 Child – 520 Infant – 0
f_g	Fraction of annual intake of stored vegetation (0.76, from Regulatory Guide 1.109).
$(DFL_{oi})_a$	Ingestion dose conversion factor for nuclide i, organ o, and age group a, from Tables E-11 through E-14 of Regulatory Guide 1.109 (mrem/pCi).
0.75	Fraction of total feed that is water. (From NUREG-0133).
0.5	Ratio of specific activity of feed grass water to atmospheric water. (From NUREG-0133).
H	Absolute humidity of the atmosphere (8 gm/m^3, from Regulatory Guide 1.109).

Grass/Cow/Milk

$$R_{oapi} = K' \frac{Q_F (U_{ap})}{\lambda_i + \lambda_w} F_{mi}(r)(DFL_{oi})_a \left[\frac{f_p f_s}{Y_p} + \frac{(1 - f_p f_s) e^{-\lambda_i t_h}}{Y_s} \right] e^{-\lambda_i t_f}$$

Formula: from NUREG-0133, pages 32 & 33. Where:	
R_{oapi}	Dose commitment factor for organ o, age group a, nuclide i, for grass/cow/milk pathway (m^2·mrem/yr per µCi/sec). (See Appendices G through J for age group and pathway specific dose commitment factors).
K'	Units conversion factor pCi/µCi (10^6).
Q_F	Cow consumption rate (50 kg/day, from Regulatory Guide 1.109)
U_{ap}	Consumption rate of cow milk for age group a (liters/yr, from Regulatory Guide 1.109). Adult – 310 Teen – 400 Child – 330 Infant – 300
r	Fraction of deposited activity retained on cow's feed grass, (from Regulatory Guide 1.109). 1.0 for radioiodine. 0.2 for particulates.
Y_p	Agricultural productivity by unit area of pasture feed grass (0.7 kg/m^2, from Regulatory Guide 1.109).
Y_s	Agricultural productivity by unit area of stored feed (2.0 kg/m^2, from Regulatory Guide 1.109).
λ_i	Nuclide decay constant for nuclide i (sec^{-1}).
λ_w	Decay constant for removal of activity on leaf and plant surfaces by weathering (5.73×10^{-7} sec^{-1}, from NUREG-0133).
$(DFL_{oi})_a$	Ingestion dose conversion factor for nuclide i, organ o, and age group a, from Tables E-11 through E-14 of Regulatory Guide 1.109 (mrem/pCi).
F_{mi}	Stable element transfer coefficient for nuclide i, in days/liter, from Table E-1 of Regulatory Guide 1.109 for cow milk.
f_p	Fraction of year that the cow is on pasture (1.0, from RG 1.109).
f_s	Fraction of the cow feed that is pasture grass while the cow is on pasture (1.0, from Regulatory Guide 1.109).
t_f	Transport time for pasture to cow, to milk, to receptor (1.73E+05 seconds, from Regulatory Guide 1.109).
t_h	Transport time from pasture, to harvest, to cow, to milk, to receptor (7.78E+06 seconds, from Regulatory Guide 1.109).

Grass/Cow/Milk – Tritium

$$R_{oapi} = K' K''' F_{mi} Q_f U_{ap} (DFL_{io})_a \left[0.75(0.5/H)\right]$$

Formula: from NUREG-0133, page 34.	
Where:	
R_{oapi}	Dose commitment factor for organ o, age group a, nuclide i, for grass/cow/milk pathway (mrem/yr per μCi/m^3). (See Appendices G through J for age group and pathway specific dose commitment factors).
K'	Units conversion factor pCi/μCi (10^6).
K'''	Units conversion factor gm/kg (10^3).
Q_F	Cow consumption rate (50 kg/day, from Regulatory Guide 1.109).
U_{ap}	Consumption rate of cow milk for age group a (liters/yr, from Regulatory Guide 1.109). Adult – 310 Teen – 400 Child – 330 Infant – 300
$(DFL_{oi})_a$	Ingestion dose conversion factor for nuclide i, organ o, and age group a, from Tables E-11 through E-14 of Regulatory Guide 1.109 (mrem/pCi).
F_{mi}	Stable element transfer coefficient for nuclide i, in days/liter, from Table E-1 of Regulatory Guide 1.109 for cow milk.
0.75	Fraction of total feed that is water (from NUREG-0133).
0.5	Ratio of specific activity of feed grass water to atmospheric water (from NUREG-0133).
H	Absolute humidity of the atmosphere (8 gm/m^3, from Regulatory Guide 1.109).

Grass/Goat/Milk

$$R_{oapi} = K' \frac{Q_F(U_{ap})}{\lambda_i + \lambda_w} F_{mi}(r)(DFL_{oi})_a \left[\frac{f_p f_s}{Y_p} + \frac{(1 - f_p f_s)e^{-\lambda_i t_h}}{Y_s} \right] e^{-\lambda_i t_f}$$

Formula: from NUREG-0133, pages 32 & 33. Where:	
R_{oapi}	Dose commitment factor for organ o, age group a, nuclide i, for grass/goat/milk pathway (m^2·mrem/yr per µCi/sec). (See Appendices G through J for age group and pathway specific dose commitment factors).
K'	Units conversion factor pCi/µCi (10^6).
Q_F	Goat consumption rate (6 kg/day, from Regulatory Guide 1.109).
U_{ap}	Consumption rate of goat milk for age group a (liters/yr, from Regulatory Guide 1.109). Adult – 310 Teen – 400 Child – 330 Infant – 300
r	Fraction of deposited activity retained on goat's feed grass, from Regulatory Guide 1.109. 1.0 for radioiodine. 0.2 for particulates.
Y_p	Agricultural productivity by unit area of pasture feed grass (0.7 kg/m^2, from Regulatory Guide 1.109).
Y_s	Agricultural productivity by unit area of stored feed (2.0 kg/m^2, from Regulatory Guide 1.109).
λ_i	Nuclide decay constant for nuclide i (sec^{-1}).
λ_w	Decay constant for removal of activity on leaf and plant surfaces by weathering (5.73×10^{-7} sec^{-1}, from NUREG-0133).
$(DFL_{oi})_a$	Ingestion dose conversion factor for nuclide i, organ o, and age group a, from Tables E-11 through E-14 of Regulatory Guide 1.109 (mrem/pCi).
F_{mi}	Stable element transfer coefficient for nuclide i, in days/liter, from Table E-2 of Regulatory Guide 1.109 for goat milk.
f_p	Fraction of year that the goat is on pasture (1.0, from RG 1.109).
f_s	Fraction of the goat feed that is pasture grass while the goat is on pasture (1.0, from Regulatory Guide 1.109).
t_f	Transport time for pasture to goat, to milk, to receptor (1.73E+05 seconds, from Regulatory Guide 1.109).
t_h	Transport time from pasture, to harvest, to goat, to milk, to receptor (7.78E+06 seconds, from Regulatory Guide 1.109).

Grass/Goat/Milk – Tritium

$$R_{oapi} = K' K''' F_{mi} Q_f U_{ap} (DFL_{oi})_a \left[0.75(0.5/H)\right]$$

Formula: from NUREG-0133, page 34.	
Where:	
R_{oapi}	Dose commitment factor for organ o, age group a, nuclide i, for grass/goat/milk pathway (mrem/yr per μCi/m^3). (See Appendices G through J for age group and pathway specific dose commitment factors).
K'	Units conversion factor pCi/μCi (10^6).
K'''	Units conversion factor gm/kg (10^3).
Q_F	Goat consumption rate (6 kg/day, from Regulatory Guide 1.109).
U_{ap}	Consumption rate of goat milk for age group a (liters/yr, from Regulatory Guide 1.109). Adult – 310 Teen – 400 Child – 330 Infant – 300
$(DFL_{oi})_a$	Ingestion dose conversion factor for nuclide i, organ o, and age group a, from Tables E-11 through E-14 of Regulatory Guide 1.109 (mrem/pCi).
F_{mi}	Stable element transfer coefficient for nuclide i, in days/liter, from Table E-2 of Regulatory Guide 1.109 for goat milk.
0.75	Fraction of total feed that is water (from NUREG-0133).
0.5	Ratio of specific activity of feed grass water to atmospheric water (from NUREG-0133).
H	Absolute humidity of the atmosphere (8 gm/m^3, from Regulatory Guide 1.109).

Grass/Cow/Meat

$$R_{oapi} = K' \frac{Q_F(U_{ap})}{\lambda_i + \lambda_w} F_{fi}(r)(DFL_i)_a \left[\frac{f_p f_s}{Y_p} + \frac{(1 - f_p f_s)e^{-\lambda_i t_h}}{Y_s} \right] e^{-\lambda_i t_f}$$

Formula: from NUREG-0133, pages 34 & 35. Where:	
R_{oapi}	Dose commitment factor for organ o, age group a, nuclide i, for grass/cow/meat pathway (m^2·mrem/yr per µCi/sec). (See Appendices G through J for age group and pathway specific dose commitment factors).
K'	Units conversion factor pCi/µCi (10^6).
Q_F	Cow consumption rate (50 kg/day, from Regulatory Guide 1.109).
U_{ap}	Consumption rate of cow meat for age group a (kg/yr, from Regulatory Guide 1.109). Adult – 110 Teen – 65 Child – 41 Infant – 0
r	Fraction of deposited activity retained on cow's feed grass (from Regulatory Guide 1.109). 1.0 for radioiodine. 0.2 for particulates.
Y_p	Agricultural productivity by unit area of pasture feed grass (0.7 kg/m^2, from Regulatory Guide 1.109).
Y_s	Agricultural productivity by unit area of stored feed (2.0 kg/m^2, from Regulatory Guide 1.109).
λ_i	Nuclide decay constant for nuclide i (sec^{-1}).
λ_w	Decay constant for removal of activity on leaf and plant surfaces by weathering (5.73×10^{-7} sec^{-1}, from NUREG-0133).
$(DFL_{oi})_a$	Ingestion dose conversion factor for nuclide i, organ o, and age group a, from Tables E-11 through E-14 of Regulatory Guide 1.109 (mrem/pCi).
F_{fi}	Stable element transfer coefficient for nuclide i, in days/kg, from Table E-1 of Regulatory Guide 1.109 for cow meat.
f_p	Fraction of year that the cow is on pasture (1.0, from RG 1.109).
f_s	Fraction of the cow feed that is pasture grass while the cow is on pasture (1.0, from Regulatory Guide 1.109).
t_f	Transport time from pasture to receptor (1.73E+06 seconds, from Regulatory Guide 1.109).
t_h	Transport time from crop field to receptor (7.78E+06 seconds, from Regulatory Guide 1.109).

Grass/Cow/Meat – Tritium

$$R_{oapi} = K' K''' F_{fi} Q_F U_{ap} (DFL_{oi})_a \left[0.75(0.5/H)\right]$$

Formula: from NUREG-0133, page 35.	
Where:	
R_{oapi}	Dose commitment factor for organ o, age group a, nuclide i, for grass/cow/meat pathway (mrem/yr per μCi/m^3). (See Appendices G through J for age group and pathway specific dose commitment factors).
K'	Units conversion factor pCi/μCi (10^6).
K'''	Units conversion factor gm/kg (10^3).
Q_F	Cow consumption rate (50 kg/day, from Regulatory Guide 1.109).
U_{ap}	Consumption rate of cow meat for age group a (kg/yr, from Regulatory Guide 1.109). Adult – 110 Teen – 65 Child – 41 Infant – 0
$(DFL_{oi})_a$	Ingestion dose conversion factor for nuclide i, organ o, and age group a, from Tables E-11 through E-14 of Regulatory Guide 1.109 (mrem/pCi).
F_{fi}	Stable element transfer coefficient for nuclide i, in days/liter, from Table E-1 of Regulatory Guide 1.109 for cow meat.
0.75	Fraction of total feed that is water (from NUREG-0133).
0.5	Ratio of specific activity of feed grass water to atmospheric water (from NUREG-0133).
H	Absolute humidity of the atmosphere (8 gm/m^3, from Regulatory Guide 1.109).

4.0.3 DIRECT RADIATION

Direct radiation is that radiation from confined sources, and does not include any external component from radioactive effluents. The Point Kernel method has been used to calculate offsite dose rates from radioactive materials stored in the refueling water storage tanks, reactor makeup water storage tanks, and temporary onsite radwaste storage tanks. Dose calculations using this method performed for Catawba Nuclear Station indicate direct radiation doses are much less than 0.01 mrem/yr and, therefore, make a negligible contribution to individual dose. Direct radiation doses will not be calculated routinely.

4.0.4 EFFLUENT APPORTIONMENT

For the Catawba Nuclear Station the effluent releases are apportioned equally to each unit for each site as recommended by Section 3.1 of NUREG-0133, because the shared radwaste treatment systems at each site make it impractical to accurately ascribe releases to a specific reactor unit. For Annual Effluent Release Report purposes effluent releases are summed for each unit, and the maximum individual dose to the public is reported as a site total.

5.0 FUEL CYCLE CALCULATIONS

In accordance with the requirements of 40CFR190, the annual dose commitment to any member of the general public shall be calculated to assure that doses are limited to 25 millirems to the total body or any organ with the exception of the thyroid which is limited to 75 millirems. In accordance with the requirements of the Selected Licensee Commitments, the annual dose commitment shall also be calculated any time that one of the quarterly dose limits of the Selected Licensee Commitments is exceeded; these annual dose commitments may not just be calculated for the calendar year.

The "Uranium fuel cycle" is defined in 40CFR Part 190.02(b) as:

"Uranium fuel cycle means the operations of milling or uranium ore, chemical conversion of uranium, isotopic enrichment of uranium, fabrication of uranium fuel, generation of electricity by a light-water-cooled nuclear power plant using uranium fuel, and reprocessing of spent uranium fuel, to the extent that these directly support the production of electrical power for public use utilizing nuclear energy, but excludes mining operations, operations at waste disposal sites, transportation of any radioactive material in support of these operations, and the reuse of recovered non-uranium special nuclear and by-product materials from the cycle."

Based on this definition of the fuel cycle and the information in 10CFR51, Table S-3, and Wash-1248, the radiological impact of the following operations has been assessed for Catawba Nuclear Station:

5.0.1 MILLING

No milling operations occur within fifty miles of the Catawba Nuclear Station.

5.0.2 CONVERSION

No uranium hexafluoride production occurs within fifty miles of the Catawba Nuclear Station.

5.0.3 ENRICHMENT

No uranium enrichment operations occur within fifty miles of the Catawba Nuclear Station.

5.0.4 FUEL FABRICATION

No fuel fabrication operations occur within fifty miles of the Catawba Nuclear Station.

5.0.5 NUCLEAR POWER PRODUCTION

The production of electricity for public use using light-water-cooled nuclear power stations results in increments of dose to individuals within fifty miles of any station due to liquid and gaseous effluent releases and direct radiation or skyshine. The increments of dose resulting from liquid and gaseous effluent releases will be calculated using the ODCM methodology implemented in the RETDAS computer program. The dose from direct radiation, skyshine, and radiation from the station storage facilities has been estimated using conservative assumptions (see Section 4.0.3).

In certain situations more than one nuclear power station site may contribute to the doses to be considered in making fuel cycle dose assessments in accordance with 40CFR190. However, since the Catawba and McGuire nuclear stations are located approximately 30 miles apart the relative dose contribution from each site to the other is insignificant, and can be ignored in assessing compliance with 40CFR190.

5.0.6 FUEL REPROCESSING

No fuel reprocessing operations occur within fifty miles of the Catawba Nuclear Station.

5.0.7 40CFR190 TOTAL DOSE DETERMINATION

To summarize, only dose increments from nuclear power production operations (Section 5.0.5) need be considered in calculations to demonstrate compliance with the requirements of 40CFR190. The fuel cycle dose assessments for Catawba Nuclear Station only include liquid and gaseous dose contributions from Catawba since no other uranium fuel cycle facility contributes significantly to Catawba's maximum exposed individual. For this dose assessment, the total body and maximum organ dose contributions to the maximum exposed individual from Catawba's liquid and gaseous effluents are estimated using the following calculations:

$$D_{wb}(T) = D_{wb}(l) + D_{wb}(g)$$

$$D_{mo}(T) = D_{mo}(l) + D_{mo}(g)$$

where:

$D_{wb}(T)$ = Total estimated fuel cycle whole body dose commitment resulting from the combined liquid and gaseous effluents of Catawba during the calendar year of interest, in mrem.

$D_{mo}(T)$ = Total estimated fuel cycle maximum organ dose commitment resulting from the combined liquid and gaseous effluents of Catawba during the calendar year of interest, in mrem.

6.0 ENVIRONMENTAL LOCATIONS

6.0.1 SITE DESCRIPTION AND SAMPLE LOCATIONS

Fish Sampling

Catawba Nuclear Station is located geographically near the center of a highly industrialized region of the Carolinas. The land is predominantly rural non-farm with a small amount of land being used to support beef cattle and farming. Recreation in the area is confined mostly to the lake and shores of Lake Wylie. The site is located in the northeastern portion of York County, South Carolina, on a peninsula bounded by Beaver Dam Creek to the north, Big Allison Creek to the south, the main body of Lake Wylie to the east, and private property to the west. The Duke Power Company Wylie Dam and Hydroelectric Station are located approximately 4.5 miles southeast of the site. Rock Hill, South Carolina and Charlotte, North Carolina are the nearest large cities. The city limit of Rock Hill is located approximately 5.8 miles south-southeast of the site and the Charlotte city limit is located approximately 10.5 miles east-northeast of the site. The CNS site exclusion radius is 2500 feet.

Table 6.0-1 and Table 6.0-2 define the sampling and TLD locations for the Catawba Radiological Monitoring Program. Figure 6.0-1 and Figure 6.0-2 illustrate these locations as compared to Catawba Nuclear Station.

6.0.2 LAND USE CENSUS DATA

The Annual Land Use Census, required by Selected Licensee Commitments, is performed to ensure that changes in the use of areas at or beyond the site boundary are identified, and that modifications to the Radiological Environmental Monitoring Program are made if required by changes in land use. This census satisfies the requirements of Section IV.B.3 of Appendix I to 10CFR50. Results are shown in Table 6.0-3 and Figure 6.0-3.

TABLE 6.0-1
CATAWBA RADIOLOGICAL MONITORING PROGRAM
SAMPLING LOCATIONS

Table 6.0-1 Codes			
W	Weekly	SM	Semimonthly
BW	BiWeekly	Q	Quarterly
M	Monthly	SA	Semiannually
C	Control		

Site #	Location Description*	Air Rad. & Part.	Surface Water	Drinking Water	Shoreline Sediment	Food Products (a)	Fish	Milk	Broad Leaf Veg. (b)	Ground Water
200	Site Boundary (0.63 mi NNE)	W							M	
201	Site Boundary (0.53 mi NE)	W							M	
205	Site Boundary (0.23 mi SW)	W								
208	Discharge Canal (0.45 mi S)		M		SA		SA			
210	Ebenezer Access (2.31 mi SE)				SA					
211	Wylie Dam (4.06 mi ESE)		M							
212	Tega Cay (3.32 mi E)	W								
214	Rock Hill Water Supply (7.30 mi SSE)			M						
215 C	River Pointe - Hwy 49 (4.21 mi NNE)		M		SA					
216 C	Hwy 49 Bridge (4.19 mi NNE)						SA			
217 C	Rock Hill Substation (10.3 mi SSE)	W							M	
218 C	Belmont Water Supply (13.5 mi NNE)			M						
221 C	Dairy (14.5 mi NW)							SM		
222	Site Boundary (0.70 mi N)								M	
226	Site Boundary (0.48 mi S)								M	
252	Residence (0.64 mi SW)									Q
253	Irrigated Gardens (1.90 mi SSE)					M(a)				
254	Residence (0.82 mi N)									Q

(a) During Harvest Season
(b) When Available

* GPS data reflect approximate accuracy to within 2-5 meters. GPS field measurements were taken as close as possible to the item of interest.

TABLE 6.0-2

CATAWBA RADIOLOGICAL MONITORING PROGRAM SAMPLING LOCATIONS

(TLD SITES)

Site #	Location*	Distance	Sector	Site #	Location*	Distance	Sector
200	SITE BOUNDARY	0.63 miles	NNE	234	HOME FEDERAL BANK	4.50 miles	E
201	SITE BOUNDARY	0.53 miles	NE	235	LAKE WYLIE DAM	4.07 miles	ESE
203	SITE BOUNDARY	0.38 miles	ESE	236	SC WILDLIFE FEDERATION OFFICE	4.25 miles	SE
204	SITE BOUNDARY	0.48 miles	SSW	237	TWIN LAKES ROAD AND HOMESTEAD ROAD	4.75 miles	SSE
205	SITE BOUNDARY	0.23 miles	SW	238	PENNINGTON ROAD AND WEST OAK ROAD	4.02 miles	S
206	SITE BOUNDARY	0.67 miles	WNW	239	CARTER LUMBER COMPANY	4.49 miles	SSW
207	SITE BOUNDARY	0.95 miles	NNW	240	PARAHAM ROAD	4.07 miles	SW
212 SI	TEGA CAY AIR SITE	3.32 miles	E	241	CAMPBELL ROAD	4.58 miles	WSW
217 C	ROCK HILL AIR SITE	10.3 miles	SSE	242	TRANSMISSION TOWER ON PARAHAM ROAD	4.56 miles	W
222	SITE BOUNDARY	0.69 miles	N	243	KINGSBERRY ROAD	4.39 miles	WNW
223	SITE BOUNDARY	0.57 miles	E	244	BETHEL ELEMENTARY SCHOOL	4.02 miles	NW
225	SITE BOUNDARY	0.68 miles	SE	245	CROWDERS CREEK BOAT LANDING	4.01 miles	NNW
226	SITE BOUNDARY	0.48 miles	S	246 SI	CAROWINDS GUARD HOUSE	7.87 miles	ENE
227	SITE BOUNDARY	0.52 miles	WSW	247 C	FORT MILL	7.33 miles	ESE
228	SITE BOUNDARY	0.61 miles	W	248 SI	PIEDMONT MEDICAL CENTER	6.54 miles	S
229	SITE BOUNDARY	0.84 miles	NW	249 SI	YORK COUNTY OPERATIONS CENTER	7.17 miles	S
230	RIVER HILLS COMMUNITY CHURCH	4.37 miles	N	250 SI	YORK DUKE POWER OFFICE	10.4 miles	WSW
231	RIVER HILLS FRONT ENTRANCE	4.21 miles	NNE	251 C	CLOVER	9.72 miles	WNW
232	PLEASANT HILL ROAD	4.18 miles	NE	255	SITE BOUNDARY	0.61 miles	ENE
233	ZOAR ROAD AND THOMAS DRIVE	3.95 miles	ENE	256	SITE BOUNDARY	0.58 miles	SSE

C = Control
SI = Special Interest

* GPS data reflect approximate accuracy to within 2-5 meters. GPS field measurements were taken as close as possible to the item of interest.

TABLE 6.0-3

Catawba 2003 Land Use Census Results*

Land Use Census performed 7/7 - 7/10/2003, 8/19/2003

Sector		Distance (Miles)**	Sector		Distance (Miles)**
N	Nearest Residence	0.63	S	Nearest Residence	0.63
	Nearest Garden	0.93		Nearest Garden (Irrigated)	1.26
	Nearest Milk Animal	-		Nearest Milk Animal	-
	Nearest Meat Animal	-		Nearest Meat Animal (Cow)	4.11
NNE	Nearest Residence	0.66	SSW	Nearest Residence	0.78
	Nearest Garden	2.53		Nearest Garden (Irrigated)	0.96
	Nearest Milk Animal	-		Nearest Milk Animal	-
	Nearest Meat Animal	-		Nearest Meat Animal (Cow)	3.31
NE	Nearest Residence	0.56	SW	Nearest Residence	0.66
	Nearest Garden	0.65		Nearest Garden	2.32
	Nearest Milk Animal	-		Nearest Milk Animal	-
	Nearest Meat Animal	-		Nearest Meat Animal (Cow)	3.86
ENE	Nearest Residence	0.61	WSW	Nearest Residence	0.78
	Nearest Garden (Irrigated)	0.61		Nearest Garden	2.04
	Nearest Milk Animal	-		Nearest Milk Animal	-
	Nearest Meat Animal (Cow)	4.54		Nearest Meat Animal (Cow)	2.87
E	Nearest Residence	0.65	W	Nearest Residence	0.97
	Nearest Garden	0.84		Nearest Garden	0.96
	Nearest Milk Animal	-		Nearest Milk Animal	-
	Nearest Meat Animal (Cow)	4.35		Nearest Meat Animal	-
ESE	Nearest Residence	0.84	WNW	Nearest Residence	1.10
	Nearest Garden	1.23		Nearest Garden	1.19
	Nearest Milk Animal	-		Nearest Milk Animal	-
	Nearest Meat Animal	-		Nearest Meat Animal	-
SE	Nearest Residence	0.97	NW	Nearest Residence	1.39
	Nearest Garden	1.70		Nearest Garden	1.54
	Nearest Milk Animal	-		Nearest Milk Animal	-
	Nearest Meat Animal (Cow)	4.20		Nearest Meat Animal (Cow)	1.39
SSE	Nearest Residence	0.74	NNW	Nearest Residence	1.06
	Nearest Garden	1.69		Nearest Garden	2.64
	Nearest Milk Animal	-		Nearest Milk Animal	-
	Nearest Meat Animal	-		Nearest Meat Animal	-

"-" indicates no occurrences within the 5 mile radius

* The land use census identifies nearest pathways to the exclusion area boundary (EAB, ~ 0.5 mile) for each of the 16 sectors. Locations beyond the nearest pathway for each sector are assumed to contain that pathway for dose calculation purposes.

** GPS data reflect approximate accuracy to within 2-5 meters. GPS field measurements were taken as close as possible to the item of interest.

Figure 6.0-1 Sampling Locations Map (Site Boundary)

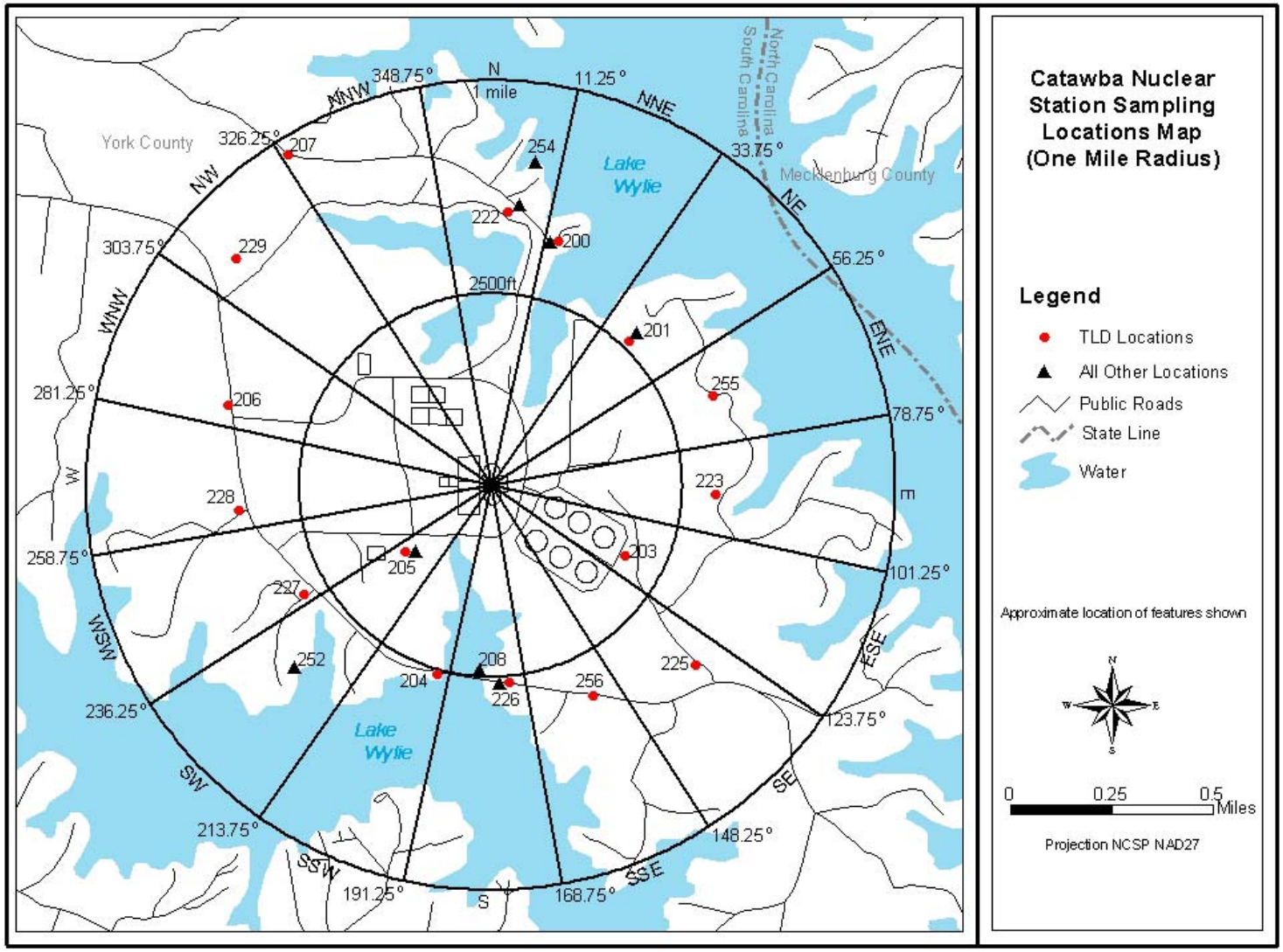

Figure 6.0-2 Sampling Locations Map (Ten Mile Radius)

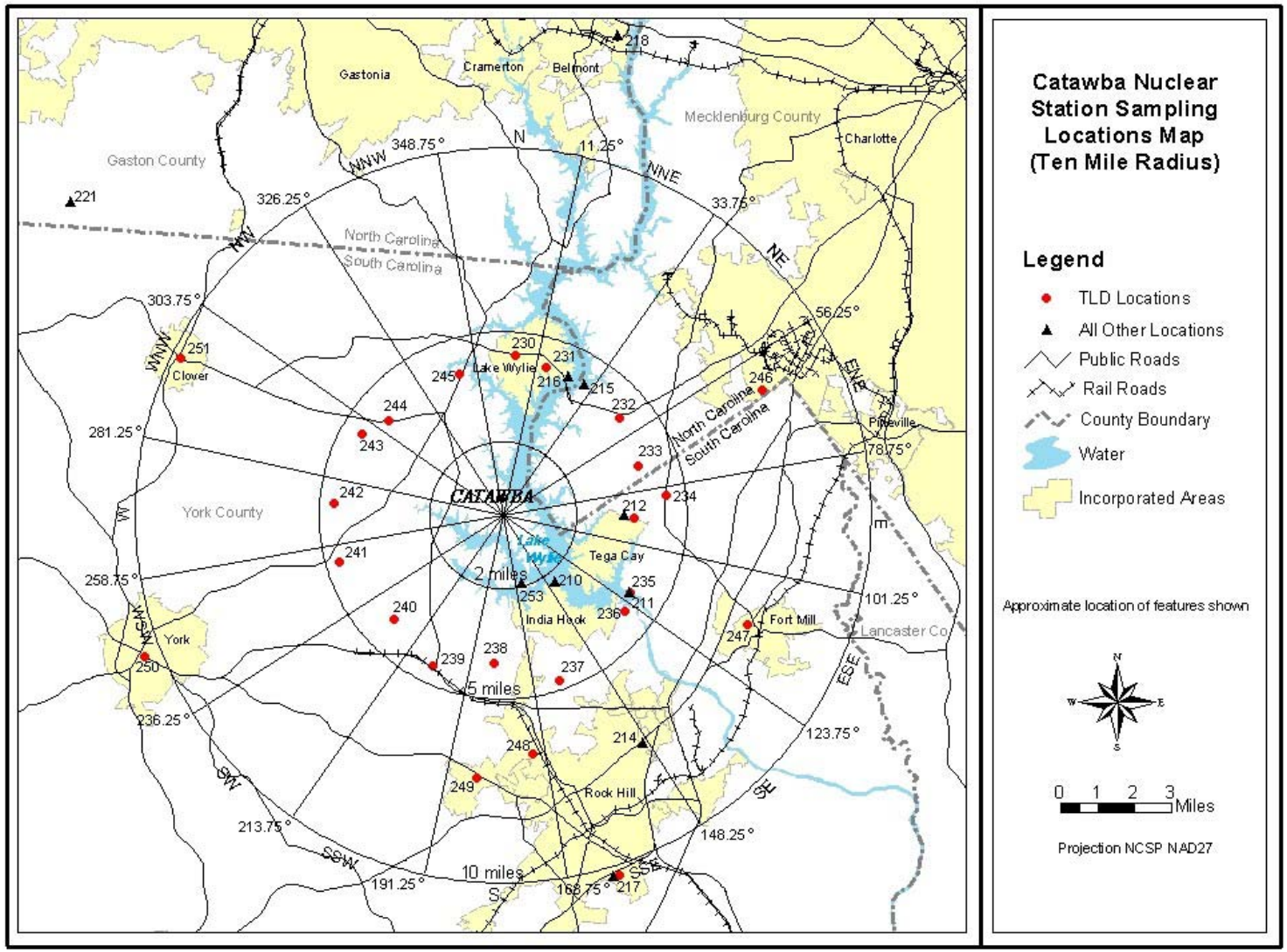

Figure 6.0-3 CNS 2003 Land Use Census Map

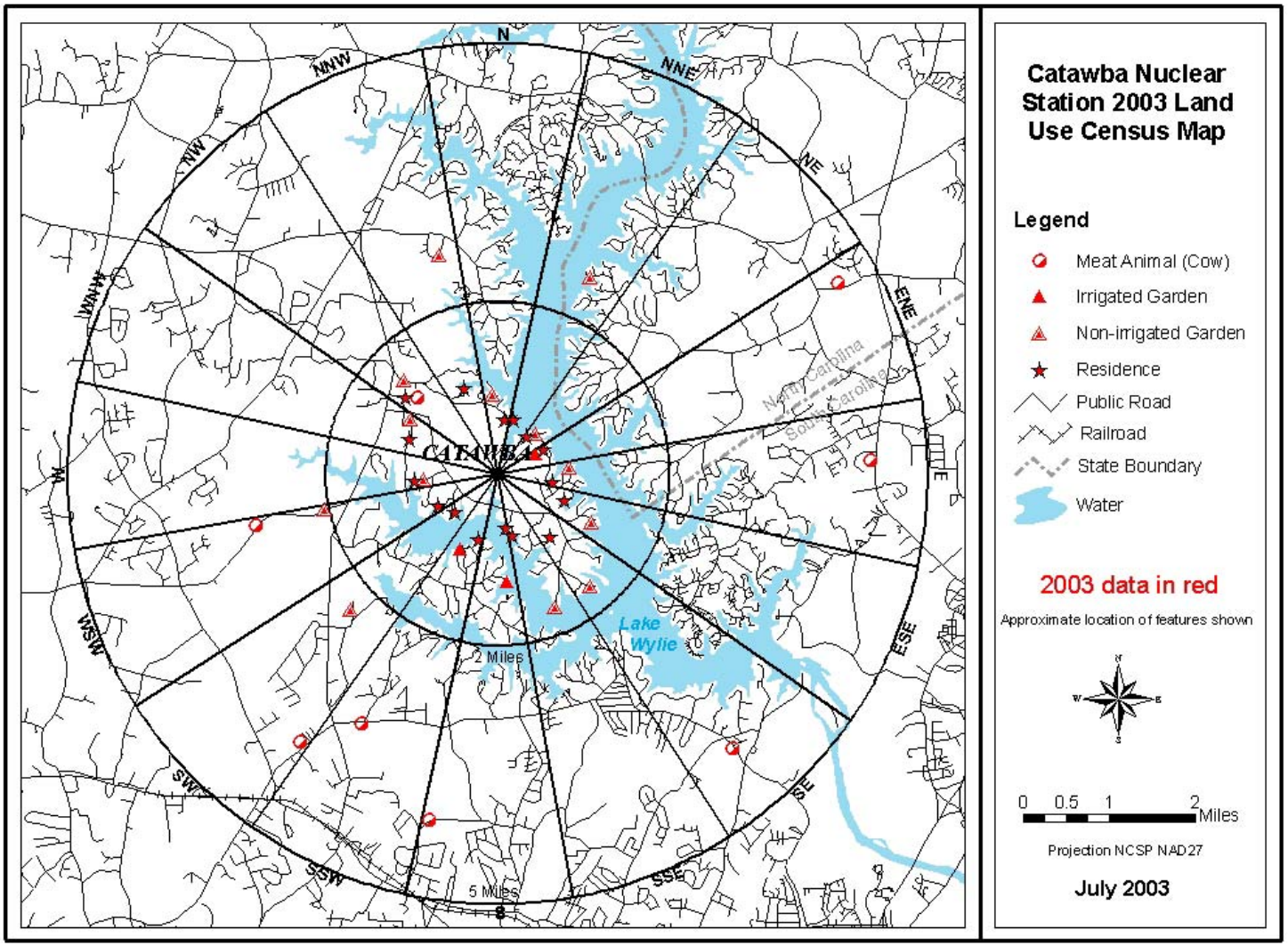

6.0.3 CATAWBA METEOROLOGY: RELATIVE AIR CONCENTRATIONS AND DEPOSITION

Calculations of annually averaged air concentrations and deposition values from routine releases provide the air dispersion and deposition factors needed for dose assessment. The methodology is based upon Regulatory Guide 1.111, as implemented by the NRC's computer model "XOQDOQ: Computer Program for the Meteorological Evaluation of Routine Effluent Releases at Nuclear Power Stations," NUREG/CR-2919, PNL-4380, September 1982. The calculation is documented in CNC-1108.01-00-0002 "Annual Air Dispersion and Deposition Factors for Routine Releases (ODCM)."

Five years of hourly meteorological data from the onsite instruments are processed into a representative joint frequency distribution of winds and atmospheric stability for input into the XOQDOQ model (Version 2.0). Thus, the air dispersion and deposition factors (X/Q and D/Q) output by the model are based on a five-year climatology for the site.

6.0.3.1 XOQDOQ METHODOLOGY AND ASSUMPTIONS

A continuous, routine release (non-purge) is simulated from each unit vent. The release type is treated as "ground-level" in the model, for which surrounding terrain elevations are not input. The locale does consist of gently rolling to flat terrain, so the default open terrain recirculation factor is applied in XOQDOQ [KOPT(8)=1]. This correction factor is recommended in RG 1.111 to adjust the straight-line airflow of the model for spatial and temporal variations that are produced by large-scale weather patterns.

In order for XOQDOQ to treat the plume as a ground-level release, the exit velocity and the inside diameter of the unit vent must be input as zero. The heat emission rate of each vent is also assumed to be zero, as recommended by the model. The height of the vent (38 m) above plant grade elevation (594 ft msl) is then used to determine the plume centerline height. Using the building height (41 m) and minimum cross-sectional area of the containment building (1616 m^2), XOQDOQ applies a building wake correction to the relative air concentrations from the ground level release.

Calculations of relative air concentrations and deposition are made for gridded receptor distances per directional sector. The model's default values for half-lives are used (i.e. no decay; 2.26 days for short-lived noble gases; and 8 days with depletion factors for all iodines [DECAYS(I)= 101; 2.26; -8.0]).

6.0.3.2 METEOROLOGICAL DATA

Five years (1988-1992) of hourly, onsite meteorological data are used to produce the joint frequency distributions of wind speed and direction per stability class. The 10 m level winds are used. It is these joint frequency distributions which are input to the XOQDOQ model. Hours of calm winds are distributed by direction with the same frequency as the lowest "noncalm" wind speed class [KOPT(1)=1]. Thus, wind speed classes are established so that the lowest wind speed class is the starting threshold of the anemometer

(i.e. the "calm" wind speed class). The largest wind speed class has the upper bound of (5 m/s + max hourly wind speed). Stability classes (A-G) are based on the vertical temperature gradient, measured by the hourly averaged delta-T variable.

6.0.3.3 ANNUAL XOQDOQ COMPARISON TO THE ODCM

Each year, the prevailing winds and stability class frequencies for CNS are compared to the 5-year period (1988-1992) upon which the χ/Q and D/Q calculations have been made. The 5-year climatology is summarized in Table 6.0-4 and Table 6.0-5 below. Since the comparison is being made to a 5-year climatology, significant differences should not occur in the meteorological variables of concern (i.e. winds and delta-T). The meteorological comparison serves to verify this assumption.

Table 6.0-4
CNS Atmospheric Stability Frequency (1988-1992)

	A	B	C	D	E	F	G
Frequency (%)	10.9	4.3	5.5	**31.1**	**26.9**	10.3	10.9

Table 6.0-5
CNS Frequency of Wind Direction and Speed (1988-1992)

Sector	Wind Direction Frequency (%)	Wind Speed Class (m/s)	Wind Speed Frequency (%)
N	**10.1**	CALM	0.9
NNE	8.6	0.45 - 0.74 m/s	3.6
NE	4.9	0.75 - 0.99 m/s	4.7
ENE	1.9	1.00 - 1.24 m/s	6.3
E	1	1.25 - 1.49 m/s	9.7
ESE	1.4	**1.50 - 1.99 m/s**	**17.5**
SE	2.9	**2.00 - 2.99 m/s**	**25.1**
SSE	6.2	**3.00 - 3.99 m/s**	**16.4**
S	**11.1**	4.00 - 4.99 m/s	9.4
SSW	**13.7**	5.00 - 5.99 m/s	3.5
SW	9.6	6.00 - 7.99 m/s	1.6
WSW	5.2	8.00 - 9.99 m/s	0.1
W	4.1	> 9.99 m/s	1.9
WNW	4.8		
NW	4.8		
NNW	8.9		

The joint frequency distributions of wind speed and direction versus atmospheric stability class are also determined from the annual data to provide input to the XOQDOQ model.

Modeled χ/Q and D/Q values for the 0.5 mile Exclusion Area Boundary at CNS are compared to the maximum of the (1988-1992) χ/Q and D/Q values from all sectors. If the newly calculated annual dispersion and deposition values do not result in a significant increase in the calculated offsite dose relative to the 10CFR50, Appendix I dose objectives then the 5-year χ/Q and D/Q values used in the Annual Radiological Effluent Release Report (ARERR) are not revised. An increase in calculated offsite dose that is greater than five percent of the 10CFR50, Appendix I dose objectives would be considered significant enough to warrant a change in the χ/Q and D/Q values used in the ARERR. If an increasing trend in the annual χ/Q and D/Q values compared to the 5-year values is noted then a revised set of 5-year χ/Q and D/Q values will be generated. These limiting values are listed in Table 6.0-6. The entire χ/Q and D/Q list based on directional sector and distance is given in Table 6.0-8 and 6.0-9.

Table 6.0-6
CNS Limiting χ/Q and D/Q Values (1988-1992)

	(χ/Q,s/m^3) (D/Q,1/m^2)	**Distance**	**Sector**
Maximum X/Q	3.510E-5	0.5 mile EAB	NNE
Maximum D/Q	1.078E-7	0.5 mile EAB	NNE

Note:

The Catawba meteorological instruments were moved from the 40 m microwave tower to a new 60 m meteorological tower in June 1996. The taller tower became operational at 1900 hours on June 11, 1996. Therefore, determination of atmospheric stability prior to this time uses the 30 m separation criteria shown in Table 6.0-7, while data after this time uses the 50.9 m separation criteria.

Table 6.0-7
CNS Delta-T Ranges per Vertical Separation Distances

Stability Class	**30 m separation Delta-T (between 40m-10m levels)**	**50.9 m separation Delta-T (between 60.2m-9.3m levels) Starting at 1900 hours on June 11, 1996.**
A	$dT \leq -0.57$	$dT \leq -0.97$
B	$-0.57 \leq dT \leq -0.51$	$-0.97 \leq dT \leq -0.87$
C	$-0.51 \leq dT \leq -0.45$	$-0.87 \leq dT \leq -0.76$
D	$-0.45 \leq dT \leq -0.15$	$-0.76 \leq dT \leq -0.25$
E	$-0.15 \leq dT \leq 0.45$	$-0.25 \leq dT \leq 0.76$
F	$0.45 \leq dT \leq 1.2$	$0.76 \leq dT \leq 2.04$
G	$1.2 < dT$	$2.04 < dT$

Table 6.0-8

Catawba χ/Q Average Values (1988-1992) (sec/m^3)

Sector	0.5-1.0*	1.0-1.5	1.5-2.0	2.0-2.5	2.5-3.0	3.0-3.5	3.5-4.0	4.0-4.5	4.5-5.0
N	2.959E-05	7.879E-06	3.222E-06	1.768E-06	1.133E-06	7.978E-07	5.987E-07	4.701E-07	3.818E-07
NNE	3.510E-05	9.342E-06	3.814E-06	2.091E-06	1.338E-06	9.420E-07	7.066E-07	5.546E-07	4.503E-07
NE	2.927E-05	7.738E-06	3.166E-06	1.738E-06	1.114E-06	7.848E-07	5.891E-07	4.627E-07	3.759E-07
ENE	2.208E-05	5.813E-06	2.406E-06	1.330E-06	8.573E-07	6.065E-07	4.568E-07	3.598E-07	2.931E-07
E	1.858E-05	4.895E-06	2.032E-06	1.126E-06	7.266E-07	5.147E-07	3.880E-07	3.059E-07	2.493E-07
ESE	1.962E-05	5.223E-06	2.163E-06	1.197E-06	7.712E-07	5.457E-07	4.110E-07	3.238E-07	2.637E-07
SE	1.965E-05	5.167E-06	2.151E-06	1.194E-06	7.717E-07	5.471E-07	4.128E-07	3.257E-07	2.656E-07
SSE	2.561E-05	6.751E-06	2.798E-06	1.548E-06	9.982E-07	7.064E-07	5.323E-07	4.194E-07	3.416E-07
S	1.552E-05	4.101E-06	1.642E-06	8.878E-07	5.624E-07	3.926E-07	2.924E-07	2.282E-07	1.843E-07
SSW	8.747E-06	2.267E-06	8.761E-07	4.621E-07	2.872E-07	1.973E-07	1.450E-07	1.118E-07	8.939E-08
SW	5.071E-06	1.328E-06	5.087E-07	2.666E-07	1.648E-07	1.127E-07	8.249E-08	6.340E-08	5.052E-08
WSW	3.265E-06	8.730E-07	3.413E-07	1.815E-07	1.135E-07	7.839E-08	5.786E-08	4.479E-08	3.592E-08
W	2.024E-06	5.307E-07	2.058E-07	1.088E-07	6.771E-08	4.657E-08	3.426E-08	2.644E-08	2.115E-08
WNW	3.468E-06	9.193E-07	3.595E-07	1.913E-07	1.197E-07	8.267E-08	6.104E-08	4.727E-08	3.793E-08
NW	6.249E-06	1.680E-06	6.638E-07	3.558E-07	2.239E-07	1.555E-07	1.153E-07	8.959E-08	7.212E-08
NNW	1.406E-05	3.723E-06	1.508E-06	8.221E-07	5.242E-07	3.678E-07	2.752E-07	2.155E-07	1.747E-07

* Units are in miles from the station. Each χ/Q value is calculated at the closest location for the sector, e.g., 2.959E-05 sec/m^3 is the χ/Q value at 0.5 miles (N) from the station. As discussed in Catawba UFSAR Section 2.1.1.3, the boundary for establishing gaseous effluent release limits is the exclusion area boundary (EAB). The EAB is defined as a 2500-ft. (~0.5 mile) radius from the station center.

Table 6.0-9

Catawba D/Q Average Values (1988-1992)
(m^{-2})

Sector	0.5-1.0*	1.0-1.5	1.5-2.0	2.0-2.5	2.5-3.0	3.0-3.5	3.5-4.0	4.0-4.5	4.5-5.0
N	8.799E-08	2.148E-08	7.715E-09	3.826E-09	2.253E-09	1.475E-09	1.038E-09	7.693E-10	5.928E-10
NNE	1.078E-07	2.630E-08	9.448E-09	4.686E-09	2.759E-09	1.807E-09	1.271E-09	9.421E-10	7.260E-10
NE	7.653E-08	1.868E-08	6.710E-09	3.328E-09	1.960E-09	1.283E-09	9.028E-10	6.691E-10	5.156E-10
ENE	4.135E-08	1.009E-08	3.626E-09	1.798E-09	1.059E-09	6.933E-10	4.878E-10	3.615E-10	2.786E-10
E	3.246E-08	7.924E-09	2.846E-09	1.411E-09	8.311E-10	5.442E-10	3.829E-10	2.838E-10	2.187E-10
ESE	3.810E-08	9.301E-09	3.341E-09	1.657E-09	9.755E-10	6.388E-10	4.495E-10	3.331E-10	2.567E-10
SE	3.799E-08	9.274E-09	3.331E-09	1.652E-09	9.727E-10	6.369E-10	4.482E-10	3.321E-10	2.560E-10
SSE	7.019E-08	1.713E-08	6.154E-09	3.052E-09	1.797E-09	1.177E-09	8.280E-10	6.136E-10	4.729E-10
S	7.881E-08	1.924E-08	6.910E-09	3.427E-09	2.018E-09	1.321E-09	9.297E-10	6.890E-10	5.310E-10
SSW	6.787E-08	1.657E-08	5.951E-09	2.951E-09	1.738E-09	1.138E-09	8.007E-10	5.934E-10	4.573E-10
SW	3.877E-08	9.464E-09	3.399E-09	1.686E-09	9.926E-10	6.500E-10	4.573E-10	3.389E-10	2.612E-10
WSW	1.476E-08	3.604E-09	1.295E-09	6.420E-10	3.780E-10	2.475E-10	1.742E-10	1.291E-10	9.947E-11
W	7.895E-09	1.927E-09	6.922E-10	3.433E-10	2.021E-10	1.324E-10	9.313E-11	6.902E-11	5.319E-11
WNW	1.087E-08	2.654E-09	9.534E-10	4.728E-10	2.784E-10	1.823E-10	1.283E-10	9.507E-11	7.326E-11
NW	2.319E-08	5.661E-09	2.033E-09	1.008E-09	5.938E-10	3.888E-10	2.736E-10	2.027E-10	1.562E-10
NNW	4.863E-08	1.187E-08	4.264E-09	2.114E-09	1.245E-09	8.152E-10	5.736E-10	4.251E-10	3.276E-10

* Units are in miles from the station. Each D/Q value is calculated at the closest location for the sector, e.g., 8.799E-08 m^{-2} is the D/Q value at 0.5 miles (N) from the station. As discussed in Catawba UFSAR Section 2.1.1.3, the boundary for establishing gaseous effluent release limits is the exclusion area boundary (EAB). The EAB is defined as a 2500-ft. (~0.5 mile) radius from the station center.

7.0 LICENSEE INITIATED CHANGES

Note: All changes made to the Catawba ODCM are reviewed by knowledgeable individual(s), and approved by the Station Manager and the General Office Radiation Protection Manager prior to implementation. The following changes do not adversely impact the accuracy or reliability of effluent, dose, or setpoint calculations.

Section 1 – Page 3, Figure 1.0-1
Modified drawing to correctly show the discharge path from the Recycle Monitor Tanks to EMF 49. (Reference PIP C-03-00411 for further information).

Section 4 – Page 3
Added information for the potable water dilution factor, D_w, definition to indicate that a value other than one based on historic average flows can be used to account for deviations from average in a particular year or for added conservatism. A D_w value of 21.7 (half the historic average) is currently being used for liquid dose calculations.

Section 6 – Page 2
Table designation corrected in code table from "2.1-B" to "6.0-1".

Location distances changed to reflect three significant figures following measurement of all locations during 2003.

Location 209 (Dairy) was removed from Table 6.0-1. Dairy ceased operation effective 12/2/2003. (Reference PIP C-03-06839 for further information).

Location 219 (Dairy) was removed from Table 6.0-1. Dairy ceased operation effective 12/2/2003. (Reference PIP C-03-06839 for further information).

Location 214, drinking water (Rock Hill), was determined to be located in the SSE sector at 7.30 miles. Previous documentation listed the location as in the SE sector at 7.30 miles. The location description in Table 6.0-1 was changed.

Location 253 location description changed in Table 6.0-1 from "Downstream within 5 miles Radius" to "1.90 mi SSE".

Footnote added below Table 6.0-1 describing approximation of GPS measurements.

Section 6 – Page 3
Location distances changed to reflect three significant figures following measurement of all locations during 2003.

Font changed for Table 6.0-2 footnote codes.

Footnote added below Table 6.0-2 describing approximation of GPS measurements.

Section 6 – Page 4
Changed title of Table 6.0-3 to: "Catawba 2003 Land Use Census Results".

Land use census dates were changed to reflect latest census dates.

All table attributes were changed due to the updated 2003 land use census.

Font changed for Table 6.0-3 footnote.

Footnote added below Table 6.0-3 describing approximation of GPS measurements.

Section 6 - Page 5
Figure 6.0-1 regenerated to depict 2003 GPS measurements. Page rotated from portrait presentation to landscape presentation for increased detail display.

Section 6 - Page 6
Figure 6.0-2 regenerated to depict 2003 GPS measurements. Page rotated from portrait presentation to landscape presentation for increased detail display.

Location 209 (Dairy) in SSW sector removed from Figure 6.0-2. Dairy ceased operation effective 12/2/2003. (Reference PIP C-03-06839 for further information).

Location 219 (Dairy) in SW sector removed from Figure 6.0-2. Dairy ceased operation effective 12/2/2003. (Reference PIP C-03-06839 for further information).

Section 6 - Page 7
Figure 6.0-3 regenerated to depict 2003 GPS measurements. Page rotated from portrait presentation to landscape presentation for increased detail display.

Section 6 - Page 10
Revised the criterion for when to change the 5-year χ/Q and D/Q values to the newly calculated annual χ/Q and D/Q values for use in the Annual Radiological Effluent Release Report (ARERR). The previous criterion required using the annual χ/Q and D/Q values if either an annual χ/Q or annual D/Q exceeded the corresponding 5-year χ/Q or D/Q value by 20%. However this criterion can result in a lower calculated dose compared to using the 5-year values. For example, an annual D/Q could exceed the 5-year D/Q by more than 20%, but the annual χ/Q could be less than the 5-year χ/Q value.

Since Catawba's gas maximum organ dose is almost completely from H-3, which is calculated using the χ/Q rather than D/Q, Catawba's ARERR gas maximum organ dose would be less in this example using the annual values rather than the 5-year values even though the annual D/Q value is greater than 20% of the 5-year D/Q value. The revised criterion will not result in non-conservative dose calculations for the ARERR.

APPENDIX A

Dose Factors for Exposure to a Semi-Infinite Cloud of Noble Gases*

Nuclide	K_i Total Body mrem/yr/ mCi/m^3	L_i Skin mrem/yr/ mCi/m^3	M_i Gamma Air mrad/yr/ mCi/m^3	N_i Beta Air mrad/yr/ mCi/m^3
AR-41	8.840E+03	2.690E+03	9.300E+03	3.280E+03
KR-83M	7.560E-02	0.000E+00	1.930E+01	2.880E+02
KR-85M	1.170E+03	1.460E+03	1.230E+03	1.970E+03
KR-85	1.610E+01	1.340E+03	1.720E+01	1.950E+03
KR-87	5.920E+03	9.730E+03	6.170E+03	1.030E+04
KR-88	1.470E+04	2.370E+03	1.520E+04	2.930E+03
KR-89	1.660E+04	1.010E+04	1.730E+04	1.060E+04
KR-90	1.560E+04	7.290E+03	1.630E+04	7.830E+03
XE-131M	9.150E+01	4.760E+02	1.560E+02	1.110E+03
XE-133M	2.510E+02	9.940E+02	3.270E+02	1.480E+03
XE-133	2.940E+02	3.060E+02	3.530E+02	1.050E+03
XE-135M	3.120E+03	7.110E+02	3.360E+03	7.390E+02
XE-135	1.810E+03	1.860E+03	1.920E+03	2.460E+03
XE-137	1.420E+03	1.220E+04	1.510E+03	1.270E+04
XE-138	8.830E+03	4.130E+03	9.210E+03	4.750E+03

* Reference Regulatory Guide 1.109, Table B-1

APPENDIX B

P_i Dose Factors for use in the Gaseous Release Rate Limit Calculations

Agegroup:	INFANT	Pathway:	Grs/Cow/Milk (CMILK)			Units:	m^2·mrem/yr / mCi/sec; mrem/yr / mCi/m^3 (H-3)	
Nuclide	**Bone**	**Liver**	**Thyroid**	**Kidney**	**Lung**	**Gilli**	**Skin**	**Total Body**
H-3	0.000E+00	2.380E+03	2.380E+03	2.380E+03	2.380E+03	2.380E+03	0.000E+00	2.380E+03
C-14	2.340E+09	5.000E+08	5.000E+08	5.000E+08	5.000E+08	5.000E+08	0.000E+00	5.000E+08
NA-24	1.540E+07	1.540E+07	1.540E+07	1.540E+07	1.540E+07	1.540E+07	0.000E+00	1.540E+07
P-32	1.600E+11	9.430E+09	0.000E+00	0.000E+00	0.000E+00	2.170E+09	0.000E+00	6.210E+09
CR-51	0.000E+00	0.000E+00	1.050E+05	2.300E+04	2.050E+05	4.700E+06	0.000E+00	1.610E+05
MN-54	0.000E+00	3.900E+07	0.000E+00	8.640E+06	0.000E+00	1.430E+07	0.000E+00	8.840E+06
MN-56	0.000E+00	3.100E-02	0.000E+00	2.660E-02	0.000E+00	2.810E+00	0.000E+00	5.340E-03
FE-55	1.350E+08	8.730E+07	0.000E+00	0.000E+00	4.270E+07	1.110E+07	0.000E+00	2.330E+07
FE-59	2.240E+08	3.920E+08	0.000E+00	0.000E+00	1.160E+08	1.870E+08	0.000E+00	1.540E+08
CO-58	0.000E+00	2.420E+07	0.000E+00	0.000E+00	0.000E+00	6.040E+07	0.000E+00	6.050E+07
CO-60	0.000E+00	8.820E+07	0.000E+00	0.000E+00	0.000E+00	2.100E+08	0.000E+00	2.080E+08
NI-63	3.490E+10	2.160E+09	0.000E+00	0.000E+00	0.000E+00	1.070E+08	0.000E+00	1.210E+09
NI-65	3.510E+00	3.970E-01	0.000E+00	0.000E+00	0.000E+00	3.020E+01	0.000E+00	1.800E-01
CU-64	0.000E+00	1.850E+05	0.000E+00	3.140E+05	0.000E+00	3.810E+06	0.000E+00	8.590E+04
ZN-65	5.550E+09	1.900E+10	0.000E+00	9.230E+09	0.000E+00	1.610E+10	0.000E+00	8.780E+09
ZN-69	2.020E-11	3.630E-11	0.000E+00	1.510E-11	0.000E+00	2.960E-09	0.000E+00	2.700E-12
BR-83	0.000E+00	0.000E+00	0.000E+00	0.000E+00	0.000E+00	0.000E+00	0.000E+00	9.340E-01
BR-84	0.000E+00	0.000E+00	0.000E+00	0.000E+00	0.000E+00	0.000E+00	0.000E+00	1.260E-22
BR-85	0.000E+00	0.000E+00	0.000E+00	0.000E+00	0.000E+00	0.000E+00	0.000E+00	0.000E+00
RB-86	0.000E+00	2.230E+10	0.000E+00	0.000E+00	0.000E+00	5.690E+08	0.000E+00	1.100E+10
RB-88	0.000E+00	1.880E-44	0.000E+00	0.000E+00	0.000E+00	1.830E-44	0.000E+00	1.030E-44
RB-89	0.000E+00	3.290E-52	0.000E+00	0.000E+00	0.000E+00	1.120E-52	0.000E+00	2.260E-52
SR-89	1.260E+10	0.000E+00	0.000E+00	0.000E+00	0.000E+00	2.590E+08	0.000E+00	3.610E+08
SR-90	1.220E+11	0.000E+00	0.000E+00	0.000E+00	0.000E+00	1.520E+09	0.000E+00	3.100E+10
SR-91	2.720E+05	0.000E+00	0.000E+00	0.000E+00	0.000E+00	3.220E+05	0.000E+00	9.830E+03

APPENDIX B

P_i Dose Factors for use in the Gaseous Release Rate Limit Calculations

Agegroup:	INFANT	Pathway:	Grs/Cow/Milk (CMILK)			Units:	m^2·mrem/yr / mCi/sec; mrem/yr / mCi/m^3 (H-3)	
Nuclide	**Bone**	**Liver**	**Thyroid**	**Kidney**	**Lung**	**Gilli**	**Skin**	**Total Body**
SR-92	4.640E+00	0.000E+00	0.000E+00	0.000E+00	0.000E+00	5.000E+01	0.000E+00	1.720E-01
Y-90	6.810E+02	0.000E+00	0.000E+00	0.000E+00	0.000E+00	9.410E+05	0.000E+00	1.830E+01
Y-91	7.330E+04	0.000E+00	0.000E+00	0.000E+00	0.000E+00	5.250E+06	0.000E+00	1.950E+03
Y-91M	5.670E-19	0.000E+00	0.000E+00	0.000E+00	0.000E+00	1.890E-15	0.000E+00	1.930E-20
Y-92	5.380E-04	0.000E+00	0.000E+00	0.000E+00	0.000E+00	1.030E+01	0.000E+00	1.510E-05
Y-93	2.160E+00	0.000E+00	0.000E+00	0.000E+00	0.000E+00	1.700E+04	0.000E+00	5.870E-02
ZR-95	6.800E+03	1.660E+03	0.000E+00	1.790E+03	0.000E+00	8.260E+05	0.000E+00	1.180E+03
ZR-97	4.060E+00	6.970E-01	0.000E+00	7.030E-01	0.000E+00	4.450E+04	0.000E+00	3.180E-01
NB-95	5.930E+05	2.440E+05	0.000E+00	1.750E+05	0.000E+00	2.060E+08	0.000E+00	1.410E+05
MO-99	0.000E+00	2.080E+08	0.000E+00	3.110E+08	0.000E+00	6.850E+07	0.000E+00	4.060E+07
TC-99M	2.750E+01	5.670E+01	0.000E+00	6.100E+02	2.960E+01	1.650E+04	0.000E+00	7.300E+02
TC-101	2.470E-59	3.110E-59	0.000E+00	3.700E-58	1.700E-59	5.280E-57	0.000E+00	3.080E-58
RU-103	8.670E+03	0.000E+00	0.000E+00	1.800E+04	0.000E+00	1.050E+05	0.000E+00	2.900E+03
RU-105	8.050E-03	0.000E+00	0.000E+00	5.920E-02	0.000E+00	3.200E+00	0.000E+00	2.710E-03
RU-106	1.900E+05	0.000E+00	0.000E+00	2.250E+05	0.000E+00	1.440E+06	0.000E+00	2.380E+04
AG-110M	3.860E+08	2.820E+08	0.000E+00	4.030E+08	0.000E+00	1.460E+10	0.000E+00	1.860E+08
TE-125M	1.510E+08	5.040E+07	5.070E+07	0.000E+00	0.000E+00	7.180E+07	0.000E+00	2.040E+07
TE-127	6.320E+03	2.120E+03	5.140E+03	1.540E+04	0.000E+00	1.330E+05	0.000E+00	1.360E+03
TE-127M	4.210E+08	1.400E+08	1.220E+08	1.040E+09	0.000E+00	1.700E+08	0.000E+00	5.100E+07
TE-129	2.720E-09	9.380E-10	2.280E-09	6.770E-09	0.000E+00	2.170E-07	0.000E+00	6.350E-10
TE-129M	5.570E+08	1.910E+08	2.140E+08	1.390E+09	0.000E+00	3.330E+08	0.000E+00	8.580E+07
TE-131	3.430E-32	1.270E-32	3.060E-32	8.760E-32	0.000E+00	1.380E-30	0.000E+00	9.610E-33
TE-131M	3.380E+06	1.360E+06	2.750E+06	9.350E+06	0.000E+00	2.290E+07	0.000E+00	1.120E+06
TE-132	2.110E+07	1.040E+07	1.540E+07	6.530E+07	0.000E+00	3.870E+07	0.000E+00	9.750E+06
I-130	3.550E+06	7.810E+06	8.750E+08	8.580E+06	0.000E+00	1.670E+06	0.000E+00	3.130E+06

APPENDIX B

P_i Dose Factors for use in the Gaseous Release Rate Limit Calculations

Agegroup:	INFANT	Pathway:	Grs/Cow/Milk (CMILK)			Units:	m^2·mrem/yr / mCi/sec; mrem/yr / mCi/m^3 (H-3)	
Nuclide	**Bone**	**Liver**	**Thyroid**	**Kidney**	**Lung**	**Gilli**	**Skin**	**Total Body**
I-131	2.720E+09	3.200E+09	1.050E+12	3.740E+09	0.000E+00	1.140E+08	0.000E+00	1.410E+09
I-132	1.430E+00	2.900E+00	1.360E+02	3.240E+00	0.000E+00	2.350E+00	0.000E+00	1.030E+00
I-133	3.630E+07	5.280E+07	9.600E+09	6.210E+07	0.000E+00	8.930E+06	0.000E+00	1.550E+07
I-134	1.760E-11	3.600E-11	8.400E-10	4.030E-11	0.000E+00	3.720E-11	0.000E+00	1.280E-11
I-135	1.120E+05	2.230E+05	2.000E+07	2.490E+05	0.000E+00	8.080E+04	0.000E+00	8.140E+04
CS-134	3.650E+10	6.800E+10	0.000E+00	1.750E+10	7.180E+09	1.850E+08	0.000E+00	6.870E+09
CS-136	1.980E+09	5.810E+09	0.000E+00	2.320E+09	4.740E+08	8.820E+07	0.000E+00	2.170E+09
CS-137	5.150E+10	6.020E+10	0.000E+00	1.620E+10	6.550E+09	1.880E+08	0.000E+00	4.270E+09
CS-138	8.390E-23	1.360E-22	0.000E+00	6.800E-23	1.060E-23	2.180E-22	0.000E+00	6.610E-23
BA-139	4.270E-07	2.830E-10	0.000E+00	1.700E-10	1.720E-10	2.710E-05	0.000E+00	1.240E-08
BA-140	2.410E+08	2.410E+05	0.000E+00	5.720E+04	1.480E+05	5.920E+07	0.000E+00	1.240E+07
BA-141	3.930E-45	2.690E-48	0.000E+00	1.620E-48	1.640E-48	4.800E-44	0.000E+00	1.240E-46
BA-142	2.430E-79	2.020E-82	0.000E+00	1.160E-82	1.220E-82	1.000E-78	0.000E+00	1.200E-80
LA-140	4.050E+01	1.600E+01	0.000E+00	0.000E+00	0.000E+00	1.880E+05	0.000E+00	4.110E+00
LA-142	1.700E-10	6.250E-11	0.000E+00	0.000E+00	0.000E+00	1.060E-05	0.000E+00	1.500E-11
CE-141	4.340E+04	2.640E+04	0.000E+00	8.150E+03	0.000E+00	1.370E+07	0.000E+00	3.110E+03
CE-143	3.970E+02	2.630E+05	0.000E+00	7.670E+01	0.000E+00	1.540E+06	0.000E+00	3.000E+01
CE-144	2.330E+06	9.520E+05	0.000E+00	3.850E+05	0.000E+00	1.330E+08	0.000E+00	1.300E+05
PR-143	1.490E+03	5.550E+02	0.000E+00	2.060E+02	0.000E+00	7.840E+05	0.000E+00	7.360E+01
PR-144	5.690E-53	2.200E-53	0.000E+00	7.980E-54	0.000E+00	1.020E-48	0.000E+00	2.870E-54
ND-147	8.810E+02	9.050E+02	0.000E+00	3.490E+02	0.000E+00	5.740E+05	0.000E+00	5.550E+01
W-187	6.080E+04	4.230E+04	0.000E+00	0.000E+00	0.000E+00	2.480E+06	0.000E+00	1.460E+04
NP-239	3.650E+01	3.260E+00	0.000E+00	6.510E+00	0.000E+00	9.430E+04	0.000E+00	1.840E+00

APPENDIX B

P_i Dose Factors for use in the Gaseous Release Rate Limit Calculations

Agegroup:	INFANT	Pathway:	Grs/Goat/Milk (GMILK)			Units:	m^2·mrem/yr / mCi/sec; mrem/yr / mCi/m^3 (H-3)	
Nuclide	**Bone**	**Liver**	**Thyroid**	**Kidney**	**Lung**	**Gilli**	**Skin**	**Total Body**
H-3	0.000E+00	4.860E+03	4.860E+03	4.860E+03	4.860E+03	4.860E+03	0.000E+00	4.860E+03
C-14	2.340E+09	5.000E+08	5.000E+08	5.000E+08	5.000E+08	5.000E+08	0.000E+00	5.000E+08
NA-24	1.850E+06	1.850E+06	1.850E+06	1.850E+06	1.850E+06	1.850E+06	0.000E+00	1.850E+06
P-32	1.920E+11	1.130E+10	0.000E+00	0.000E+00	0.000E+00	2.600E+09	0.000E+00	7.460E+09
CR-51	0.000E+00	0.000E+00	1.260E+04	2.760E+03	2.460E+04	5.640E+05	0.000E+00	1.940E+04
MN-54	0.000E+00	4.680E+06	0.000E+00	1.040E+06	0.000E+00	1.720E+06	0.000E+00	1.060E+06
MN-56	0.000E+00	3.720E-03	0.000E+00	3.190E-03	0.000E+00	3.380E-01	0.000E+00	6.410E-04
FE-55	1.760E+06	1.130E+06	0.000E+00	0.000E+00	5.550E+05	1.440E+05	0.000E+00	3.030E+05
FE-59	2.920E+06	5.100E+06	0.000E+00	0.000E+00	1.510E+06	2.430E+06	0.000E+00	2.010E+06
CO-58	0.000E+00	2.910E+06	0.000E+00	0.000E+00	0.000E+00	7.250E+06	0.000E+00	7.260E+06
CO-60	0.000E+00	1.060E+07	0.000E+00	0.000E+00	0.000E+00	2.520E+07	0.000E+00	2.500E+07
NI-63	4.190E+09	2.590E+08	0.000E+00	0.000E+00	0.000E+00	1.290E+07	0.000E+00	1.450E+08
NI-65	4.210E-01	4.760E-02	0.000E+00	0.000E+00	0.000E+00	3.620E+00	0.000E+00	2.170E-02
CU-64	0.000E+00	2.070E+04	0.000E+00	3.500E+04	0.000E+00	4.240E+05	0.000E+00	9.570E+03
ZN-65	6.660E+08	2.280E+09	0.000E+00	1.110E+09	0.000E+00	1.930E+09	0.000E+00	1.050E+09
ZN-69	2.420E-12	4.360E-12	0.000E+00	1.810E-12	0.000E+00	3.550E-10	0.000E+00	3.240E-13
BR-83	0.000E+00	0.000E+00	0.000E+00	0.000E+00	0.000E+00	0.000E+00	0.000E+00	1.120E-01
BR-84	0.000E+00	0.000E+00	0.000E+00	0.000E+00	0.000E+00	0.000E+00	0.000E+00	1.510E-23
BR-85	0.000E+00	0.000E+00	0.000E+00	0.000E+00	0.000E+00	0.000E+00	0.000E+00	0.000E+00
RB-86	0.000E+00	2.670E+09	0.000E+00	0.000E+00	0.000E+00	6.830E+07	0.000E+00	1.320E+09
RB-88	0.000E+00	2.250E-45	0.000E+00	0.000E+00	0.000E+00	2.190E-45	0.000E+00	1.230E-45
RB-89	0.000E+00	3.940E-53	0.000E+00	0.000E+00	0.000E+00	1.340E-53	0.000E+00	2.720E-53
SR-89	2.640E+10	0.000E+00	0.000E+00	0.000E+00	0.000E+00	5.430E+08	0.000E+00	7.580E+08
SR-90	2.550E+11	0.000E+00	0.000E+00	0.000E+00	0.000E+00	3.190E+09	0.000E+00	6.500E+10
SR-91	5.700E+05	0.000E+00	0.000E+00	0.000E+00	0.000E+00	6.750E+05	0.000E+00	2.060E+04

APPENDIX B

P_i Dose Factors for use in the Gaseous Release Rate Limit Calculations

Agegroup:	INFANT	Pathway:	Grs/Goat/Milk (GMILK)			Units:	m^2·mrem/yr / mCi/sec; mrem/yr / mCi/m^3 (H-3)	
Nuclide	**Bone**	**Liver**	**Thyroid**	**Kidney**	**Lung**	**Gilli**	**Skin**	**Total Body**
SR-92	9.750E+00	0.000E+00	0.000E+00	0.000E+00	0.000E+00	1.050E+02	0.000E+00	3.620E-01
Y-90	8.170E+01	0.000E+00	0.000E+00	0.000E+00	0.000E+00	1.130E+05	0.000E+00	2.190E+00
Y-91	8.790E+03	0.000E+00	0.000E+00	0.000E+00	0.000E+00	6.300E+05	0.000E+00	2.340E+02
Y-91M	6.810E-20	0.000E+00	0.000E+00	0.000E+00	0.000E+00	2.270E-16	0.000E+00	2.320E-21
Y-92	6.450E-05	0.000E+00	0.000E+00	0.000E+00	0.000E+00	1.230E+00	0.000E+00	1.810E-06
Y-93	2.590E-01	0.000E+00	0.000E+00	0.000E+00	0.000E+00	2.040E+03	0.000E+00	7.050E-03
ZR-95	8.170E+02	1.990E+02	0.000E+00	2.140E+02	0.000E+00	9.910E+04	0.000E+00	1.410E+02
ZR-97	4.870E-01	8.360E-02	0.000E+00	8.430E-02	0.000E+00	5.340E+03	0.000E+00	3.820E-02
NB-95	7.120E+04	2.930E+04	0.000E+00	2.100E+04	0.000E+00	2.480E+07	0.000E+00	1.700E+04
MO-99	0.000E+00	2.500E+07	0.000E+00	3.730E+07	0.000E+00	8.220E+06	0.000E+00	4.870E+06
TC-99M	3.300E+00	6.800E+00	0.000E+00	7.320E+01	3.550E+00	1.970E+03	0.000E+00	8.760E+01
TC-101	2.960E-60	3.730E-60	0.000E+00	4.440E-59	2.030E-60	6.340E-58	0.000E+00	3.690E-59
RU-103	1.040E+03	0.000E+00	0.000E+00	2.170E+03	0.000E+00	1.270E+04	0.000E+00	3.480E+02
RU-105	9.660E-04	0.000E+00	0.000E+00	7.110E-03	0.000E+00	3.840E-01	0.000E+00	3.250E-04
RU-106	2.280E+04	0.000E+00	0.000E+00	2.700E+04	0.000E+00	1.730E+05	0.000E+00	2.850E+03
AG-110M	4.630E+07	3.380E+07	0.000E+00	4.830E+07	0.000E+00	1.750E+09	0.000E+00	2.240E+07
TE-125M	1.810E+07	6.050E+06	6.090E+06	0.000E+00	0.000E+00	8.620E+06	0.000E+00	2.450E+06
TE-127	7.580E+02	2.540E+02	6.170E+02	1.850E+03	0.000E+00	1.590E+04	0.000E+00	1.630E+02
TE-127M	5.050E+07	1.680E+07	1.460E+07	1.240E+08	0.000E+00	2.040E+07	0.000E+00	6.120E+06
TE-129	3.260E-10	1.130E-10	2.740E-10	8.130E-10	0.000E+00	2.610E-08	0.000E+00	7.620E-11
TE-129M	6.690E+07	2.290E+07	2.570E+07	1.670E+08	0.000E+00	3.990E+07	0.000E+00	1.030E+07
TE-131	4.110E-33	1.520E-33	3.670E-33	1.050E-32	0.000E+00	1.660E-31	0.000E+00	1.150E-33
TE-131M	4.050E+05	1.630E+05	3.310E+05	1.120E+06	0.000E+00	2.750E+06	0.000E+00	1.350E+05
TE-132	2.530E+06	1.250E+06	1.850E+06	7.840E+06	0.000E+00	4.640E+06	0.000E+00	1.170E+06
I-130	4.260E+06	9.370E+06	1.050E+09	1.030E+07	0.000E+00	2.010E+06	0.000E+00	3.760E+06

APPENDIX B

P_i Dose Factors for use in the Gaseous Release Rate Limit Calculations

Agegroup:	INFANT	Pathway:	Grs/Goat/Milk (GMILK)			Units:	m^2·mrem/yr / mCi/sec; mrem/yr / mCi/m^3 (H-3)	
Nuclide	**Bone**	**Liver**	**Thyroid**	**Kidney**	**Lung**	**Gilli**	**Skin**	**Total Body**
I-131	3.260E+09	3.850E+09	1.260E+12	4.490E+09	0.000E+00	1.370E+08	0.000E+00	1.690E+09
I-132	1.720E+00	3.480E+00	1.630E+02	3.890E+00	0.000E+00	2.820E+00	0.000E+00	1.240E+00
I-133	4.350E+07	6.340E+07	1.150E+10	7.450E+07	0.000E+00	1.070E+07	0.000E+00	1.860E+07
I-134	2.110E-11	4.320E-11	1.010E-09	4.830E-11	0.000E+00	4.470E-11	0.000E+00	1.540E-11
I-135	1.350E+05	2.680E+05	2.400E+07	2.990E+05	0.000E+00	9.700E+04	0.000E+00	9.770E+04
CS-134	1.090E+11	2.040E+11	0.000E+00	5.250E+10	2.150E+10	5.540E+08	0.000E+00	2.060E+10
CS-136	5.930E+09	1.740E+10	0.000E+00	6.950E+09	1.420E+09	2.650E+08	0.000E+00	6.510E+09
CS-137	1.540E+11	1.810E+11	0.000E+00	4.850E+10	1.960E+10	5.650E+08	0.000E+00	1.280E+10
CS-138	2.520E-22	4.090E-22	0.000E+00	2.040E-22	3.190E-23	6.540E-22	0.000E+00	1.980E-22
BA-139	5.130E-08	3.400E-11	0.000E+00	2.040E-11	2.060E-11	3.250E-06	0.000E+00	1.480E-09
BA-140	2.890E+07	2.890E+04	0.000E+00	6.870E+03	1.780E+04	7.100E+06	0.000E+00	1.490E+06
BA-141	4.720E-46	3.230E-49	0.000E+00	1.940E-49	1.960E-49	5.760E-45	0.000E+00	1.490E-47
BA-142	2.920E-80	2.430E-83	0.000E+00	1.400E-83	1.470E-83	1.200E-79	0.000E+00	1.440E-81
LA-140	4.860E+00	1.920E+00	0.000E+00	0.000E+00	0.000E+00	2.250E+04	0.000E+00	4.930E-01
LA-142	2.040E-11	7.500E-12	0.000E+00	0.000E+00	0.000E+00	1.270E-06	0.000E+00	1.790E-12
CE-141	5.200E+03	3.170E+03	0.000E+00	9.790E+02	0.000E+00	1.640E+06	0.000E+00	3.740E+02
CE-143	4.760E+01	3.160E+04	0.000E+00	9.200E+00	0.000E+00	1.840E+05	0.000E+00	3.600E+00
CE-144	2.790E+05	1.140E+05	0.000E+00	4.620E+04	0.000E+00	1.600E+07	0.000E+00	1.560E+04
PR-143	1.780E+02	6.670E+01	0.000E+00	2.480E+01	0.000E+00	9.410E+04	0.000E+00	8.840E+00
PR-144	6.830E-54	2.640E-54	0.000E+00	9.570E-55	0.000E+00	1.230E-49	0.000E+00	3.440E-55
ND-147	1.060E+02	1.090E+02	0.000E+00	4.190E+01	0.000E+00	6.880E+04	0.000E+00	6.650E+00
W-187	7.300E+03	5.070E+03	0.000E+00	0.000E+00	0.000E+00	2.980E+05	0.000E+00	1.750E+03
NP-239	4.380E+00	3.910E-01	0.000E+00	7.810E-01	0.000E+00	1.130E+04	0.000E+00	2.210E-01

APPENDIX B

P_i Dose Factors for use in the Gaseous Release Rate Limit Calculations

Agegroup:	INFANT	Pathway:	Inhalation (INHL)			Units:	mrem/yr / mCi/m^3	
Nuclide	**Bone**	**Liver**	**Thyroid**	**Kidney**	**Lung**	**Gilli**	**Skin**	**Total Body**
H-3	0.000E+00	6.470E+02	6.470E+02	6.470E+02	6.470E+02	6.470E+02	0.000E+00	6.470E+02
C-14	2.650E+04	5.310E+03	5.310E+03	5.310E+03	5.310E+03	5.310E+03	0.000E+00	5.310E+03
NA-24	1.060E+04	1.060E+04	1.060E+04	1.060E+04	1.060E+04	1.060E+04	0.000E+00	1.060E+04
P-32	2.030E+06	1.120E+05	0.000E+00	0.000E+00	0.000E+00	1.610E+04	0.000E+00	7.740E+04
CR-51	0.000E+00	0.000E+00	5.750E+01	1.320E+01	1.280E+04	3.570E+02	0.000E+00	8.950E+01
MN-54	0.000E+00	2.530E+04	0.000E+00	4.980E+03	1.000E+06	7.060E+03	0.000E+00	4.980E+03
MN-56	0.000E+00	1.540E+00	0.000E+00	1.100E+00	1.250E+04	7.170E+04	0.000E+00	2.210E-01
FE-55	1.970E+04	1.170E+04	0.000E+00	0.000E+00	8.690E+04	1.090E+03	0.000E+00	3.330E+03
FE-59	1.360E+04	2.350E+04	0.000E+00	0.000E+00	1.010E+06	2.480E+04	0.000E+00	9.480E+03
CO-58	0.000E+00	1.220E+03	0.000E+00	0.000E+00	7.770E+05	1.110E+04	0.000E+00	1.820E+03
CO-60	0.000E+00	8.020E+03	0.000E+00	0.000E+00	4.510E+06	3.190E+04	0.000E+00	1.180E+04
NI-63	3.390E+05	2.040E+04	0.000E+00	0.000E+00	2.090E+05	2.420E+03	0.000E+00	1.160E+04
NI-65	2.390E+00	2.840E-01	0.000E+00	0.000E+00	8.120E+03	5.010E+04	0.000E+00	1.230E-01
CU-64	0.000E+00	1.880E+00	0.000E+00	3.980E+00	9.300E+03	1.500E+04	0.000E+00	7.740E-01
ZN-65	1.930E+04	6.260E+04	0.000E+00	3.250E+04	6.470E+05	5.140E+04	0.000E+00	3.110E+04
ZN-69	5.390E-02	9.670E-02	0.000E+00	4.020E-02	1.470E+03	1.320E+04	0.000E+00	7.180E-03
BR-83	0.000E+00	0.000E+00	0.000E+00	0.000E+00	0.000E+00	0.000E+00	0.000E+00	3.810E+02
BR-84	0.000E+00	0.000E+00	0.000E+00	0.000E+00	0.000E+00	0.000E+00	0.000E+00	4.000E+02
BR-85	0.000E+00	0.000E+00	0.000E+00	0.000E+00	0.000E+00	0.000E+00	0.000E+00	2.040E+01
RB-86	0.000E+00	1.900E+05	0.000E+00	0.000E+00	0.000E+00	3.040E+03	0.000E+00	8.820E+04
RB-88	0.000E+00	5.570E+02	0.000E+00	0.000E+00	0.000E+00	3.390E+02	0.000E+00	2.870E+02
RB-89	0.000E+00	3.210E+02	0.000E+00	0.000E+00	0.000E+00	6.820E+01	0.000E+00	2.060E+02
SR-89	3.980E+05	0.000E+00	0.000E+00	0.000E+00	2.030E+06	6.400E+04	0.000E+00	1.140E+04
SR-90	4.090E+07	0.000E+00	0.000E+00	0.000E+00	1.120E+07	1.310E+05	0.000E+00	2.590E+06
SR-91	9.560E+01	0.000E+00	0.000E+00	0.000E+00	5.260E+04	7.340E+04	0.000E+00	3.460E+00

APPENDIX B

P_i Dose Factors for use in the Gaseous Release Rate Limit Calculations

Agegroup:	INFANT	Pathway:	Inhalation (INHL)			Units:	mrem/yr / mCi/m^3	
Nuclide	**Bone**	**Liver**	**Thyroid**	**Kidney**	**Lung**	**Gilli**	**Skin**	**Total Body**
SR-92	1.050E+01	0.000E+00	0.000E+00	0.000E+00	2.380E+04	1.400E+05	0.000E+00	3.910E-01
Y-90	3.290E+03	0.000E+00	0.000E+00	0.000E+00	2.690E+05	1.040E+05	0.000E+00	8.820E+01
Y-91	5.880E+05	0.000E+00	0.000E+00	0.000E+00	2.450E+06	7.030E+04	0.000E+00	1.570E+04
Y-91M	4.070E-01	0.000E+00	0.000E+00	0.000E+00	2.790E+03	2.350E+03	0.000E+00	1.390E-02
Y-92	1.640E+01	0.000E+00	0.000E+00	0.000E+00	2.450E+04	1.270E+05	0.000E+00	4.610E-01
Y-93	1.500E+02	0.000E+00	0.000E+00	0.000E+00	7.640E+04	1.670E+05	0.000E+00	4.070E+00
ZR-95	1.150E+05	2.790E+04	0.000E+00	3.110E+04	1.750E+06	2.170E+04	0.000E+00	2.030E+04
ZR-97	1.500E+02	2.560E+01	0.000E+00	2.590E+01	1.100E+05	1.400E+05	0.000E+00	1.170E+01
NB-95	1.570E+04	6.430E+03	0.000E+00	4.720E+03	4.790E+05	1.270E+04	0.000E+00	3.780E+03
MO-99	0.000E+00	1.650E+02	0.000E+00	2.650E+02	1.350E+05	4.870E+04	0.000E+00	3.230E+01
TC-99M	1.400E-03	2.880E-03	0.000E+00	3.110E-02	8.110E+02	2.030E+03	0.000E+00	3.720E-02
TC-101	6.510E-05	8.230E-05	0.000E+00	9.790E-04	5.840E+02	8.440E+02	0.000E+00	8.120E-04
RU-103	2.020E+03	0.000E+00	0.000E+00	4.240E+03	5.520E+05	1.610E+04	0.000E+00	6.790E+02
RU-105	1.220E+00	0.000E+00	0.000E+00	8.990E-01	1.570E+04	4.840E+04	0.000E+00	4.100E-01
RU-106	8.680E+04	0.000E+00	0.000E+00	1.070E+05	1.160E+07	1.640E+05	0.000E+00	1.090E+04
AG-110M	9.980E+03	7.220E+03	0.000E+00	1.090E+04	3.670E+06	3.300E+04	0.000E+00	5.000E+03
TE-125M	4.760E+03	1.990E+03	1.620E+03	0.000E+00	4.470E+05	1.290E+04	0.000E+00	6.580E+02
TE-127	2.230E+00	9.530E-01	1.850E+00	4.860E+00	1.030E+04	2.440E+04	0.000E+00	4.890E-01
TE-127M	1.670E+04	6.900E+03	4.870E+03	3.750E+04	1.310E+06	2.730E+04	0.000E+00	2.070E+03
TE-129	7.880E-02	3.470E-02	6.750E-02	1.750E-01	3.000E+03	2.630E+04	0.000E+00	1.880E-02
TE-129M	1.410E+04	6.090E+03	5.470E+03	3.180E+04	1.680E+06	6.900E+04	0.000E+00	2.230E+03
TE-131	1.740E-02	8.220E-03	1.580E-02	3.990E-02	2.060E+03	8.220E+03	0.000E+00	5.000E-03
TE-131M	1.070E+02	5.500E+01	8.930E+01	2.650E+02	1.990E+05	1.190E+05	0.000E+00	3.630E+01
TE-132	3.720E+02	2.370E+02	2.790E+02	1.030E+03	3.400E+05	4.410E+04	0.000E+00	1.760E+02
I-130	6.360E+03	1.390E+04	1.600E+06	1.530E+04	0.000E+00	1.990E+03	0.000E+00	5.570E+03

APPENDIX B

P_i Dose Factors for use in the Gaseous Release Rate Limit Calculations

Agegroup:	INFANT	Pathway:	Inhalation (INHL)			Units:	mrem/yr / mCi/m^3	
Nuclide	**Bone**	**Liver**	**Thyroid**	**Kidney**	**Lung**	**Gilli**	**Skin**	**Total Body**
I-131	3.790E+04	4.440E+04	1.480E+07	5.180E+04	0.000E+00	1.060E+03	0.000E+00	1.960E+04
I-132	1.690E+03	3.540E+03	1.690E+05	3.950E+03	0.000E+00	1.900E+03	0.000E+00	1.260E+03
I-133	1.320E+04	1.920E+04	3.560E+06	2.240E+04	0.000E+00	2.160E+03	0.000E+00	5.600E+03
I-134	9.210E+02	1.880E+03	4.450E+04	2.090E+03	0.000E+00	1.290E+03	0.000E+00	6.650E+02
I-135	3.860E+03	7.600E+03	6.960E+05	8.470E+03	0.000E+00	1.830E+03	0.000E+00	2.770E+03
CS-134	3.960E+05	7.030E+05	0.000E+00	1.900E+05	7.970E+04	1.330E+03	0.000E+00	7.450E+04
CS-136	4.830E+04	1.350E+05	0.000E+00	5.640E+04	1.180E+04	1.430E+03	0.000E+00	5.290E+04
CS-137	5.490E+05	6.120E+05	0.000E+00	1.720E+05	7.130E+04	1.330E+03	0.000E+00	4.550E+04
CS-138	5.050E+02	7.810E+02	0.000E+00	4.100E+02	6.540E+01	8.760E+02	0.000E+00	3.980E+02
BA-139	1.480E+00	9.840E-04	0.000E+00	5.920E-04	5.950E+03	5.100E+04	0.000E+00	4.300E-02
BA-140	5.600E+04	5.600E+01	0.000E+00	1.340E+01	1.600E+06	3.840E+04	0.000E+00	2.900E+03
BA-141	1.570E-01	1.080E-04	0.000E+00	6.500E-05	2.970E+03	4.750E+03	0.000E+00	4.970E-03
BA-142	3.980E-02	3.300E-05	0.000E+00	1.900E-05	1.550E+03	6.930E+02	0.000E+00	1.960E-03
LA-140	5.050E+02	2.000E+02	0.000E+00	0.000E+00	1.680E+05	8.480E+04	0.000E+00	5.150E+01
LA-142	1.030E+00	3.770E-01	0.000E+00	0.000E+00	8.220E+03	5.950E+04	0.000E+00	9.040E-02
CE-141	2.770E+04	1.670E+04	0.000E+00	5.250E+03	5.170E+05	2.160E+04	0.000E+00	1.990E+03
CE-143	2.930E+02	1.930E+02	0.000E+00	5.640E+01	1.160E+05	4.970E+04	0.000E+00	2.210E+01
CE-144	3.190E+06	1.210E+06	0.000E+00	5.380E+05	9.840E+06	1.480E+05	0.000E+00	1.760E+05
PR-143	1.400E+04	5.240E+03	0.000E+00	1.970E+03	4.330E+05	3.720E+04	0.000E+00	6.990E+02
PR-144	4.790E-02	1.850E-02	0.000E+00	6.720E-03	1.610E+03	4.280E+03	0.000E+00	2.410E-03
ND-147	7.940E+03	8.130E+03	0.000E+00	3.150E+03	3.220E+05	3.120E+04	0.000E+00	5.000E+02
W-187	1.300E+01	9.020E+00	0.000E+00	0.000E+00	3.960E+04	3.560E+04	0.000E+00	3.120E+00
NP-239	3.710E+02	3.320E+01	0.000E+00	6.620E+01	5.950E+04	2.490E+04	0.000E+00	1.880E+01

APPENDIX B

P_i Dose Factors for use in the Gaseous Release Rate Limit Calculations

Agegroup:	INFANT	Pathway:	Ground Plane Deposition (GPD)			Units:	m^2·mrem/yr / mCi/sec	
Nuclide	**Bone**	**Liver**	**Thyroid**	**Kidney**	**Lung**	**Gilli**	**Skin**	**Total Body**
H-3	0.000E+00	0.000E+00	0.000E+00	0.000E+00	0.000E+00	0.000E+00	0.000E+00	0.000E+00
C-14	0.000E+00	0.000E+00	0.000E+00	0.000E+00	0.000E+00	0.000E+00	0.000E+00	0.000E+00
NA-24	1.710E+07	1.710E+07	1.710E+07	1.710E+07	1.710E+07	1.710E+07	1.980E+07	1.710E+07
P-32	0.000E+00	0.000E+00	0.000E+00	0.000E+00	0.000E+00	0.000E+00	0.000E+00	0.000E+00
CR-51	6.650E+06	6.650E+06	6.650E+06	6.650E+06	6.650E+06	6.650E+06	7.860E+06	6.650E+06
MN-54	1.100E+09	1.100E+09	1.100E+09	1.100E+09	1.100E+09	1.100E+09	1.290E+09	1.100E+09
MN-56	1.290E+06	1.290E+06	1.290E+06	1.290E+06	1.290E+06	1.290E+06	1.520E+06	1.290E+06
FE-55	0.000E+00	0.000E+00	0.000E+00	0.000E+00	0.000E+00	0.000E+00	0.000E+00	0.000E+00
FE-59	3.880E+08	3.880E+08	3.880E+08	3.880E+08	3.880E+08	3.880E+08	4.560E+08	3.880E+08
CO-58	5.260E+08	5.260E+08	5.260E+08	5.260E+08	5.260E+08	5.260E+08	6.160E+08	5.260E+08
CO-60	4.400E+09	4.400E+09	4.400E+09	4.400E+09	4.400E+09	4.400E+09	5.170E+09	4.400E+09
NI-63	0.000E+00	0.000E+00	0.000E+00	0.000E+00	0.000E+00	0.000E+00	0.000E+00	0.000E+00
NI-65	4.240E+05	4.240E+05	4.240E+05	4.240E+05	4.240E+05	4.240E+05	4.930E+05	4.240E+05
CU-64	8.670E+05	8.670E+05	8.670E+05	8.670E+05	8.670E+05	8.670E+05	9.820E+05	8.670E+05
ZN-65	6.880E+08	6.880E+08	6.880E+08	6.880E+08	6.880E+08	6.880E+08	7.910E+08	6.880E+08
ZN-69	0.000E+00	0.000E+00	0.000E+00	0.000E+00	0.000E+00	0.000E+00	0.000E+00	0.000E+00
BR-83	6.960E+03	6.960E+03	6.960E+03	6.960E+03	6.960E+03	6.960E+03	1.010E+04	6.960E+03
BR-84	2.890E+05	2.890E+05	2.890E+05	2.890E+05	2.890E+05	2.890E+05	3.380E+05	2.890E+05
BR-85	0.000E+00	0.000E+00	0.000E+00	0.000E+00	0.000E+00	0.000E+00	0.000E+00	0.000E+00
RB-86	1.280E+07	1.280E+07	1.280E+07	1.280E+07	1.280E+07	1.280E+07	1.470E+07	1.280E+07
RB-88	4.720E+04	4.720E+04	4.720E+04	4.720E+04	4.720E+04	4.720E+04	5.400E+04	4.720E+04
RB-89	1.760E+05	1.760E+05	1.760E+05	1.760E+05	1.760E+05	1.760E+05	2.110E+05	1.760E+05
SR-89	3.070E+04	3.070E+04	3.070E+04	3.070E+04	3.070E+04	3.070E+04	3.560E+04	3.070E+04
SR-90	0.000E+00	0.000E+00	0.000E+00	0.000E+00	0.000E+00	0.000E+00	0.000E+00	0.000E+00
SR-91	3.070E+06	3.070E+06	3.070E+06	3.070E+06	3.070E+06	3.070E+06	3.590E+06	3.070E+06

APPENDIX B

P_i Dose Factors for use in the Gaseous Release Rate Limit Calculations

Agegroup:	INFANT	Pathway:	Ground Plane Deposition (GPD)			Units:	m^2·mrem/yr / mCi/sec	
Nuclide	**Bone**	**Liver**	**Thyroid**	**Kidney**	**Lung**	**Gilli**	**Skin**	**Total Body**
SR-92	1.110E+06	1.110E+06	1.110E+06	1.110E+06	1.110E+06	1.110E+06	1.230E+06	1.110E+06
Y-90	6.420E+03	6.420E+03	6.420E+03	6.420E+03	6.420E+03	6.420E+03	7.580E+03	6.420E+03
Y-91	1.510E+06	1.510E+06	1.510E+06	1.510E+06	1.510E+06	1.510E+06	1.700E+06	1.510E+06
Y-91M	1.430E+05	1.430E+05	1.430E+05	1.430E+05	1.430E+05	1.430E+05	1.660E+05	1.430E+05
Y-92	2.580E+05	2.580E+05	2.580E+05	2.580E+05	2.580E+05	2.580E+05	3.060E+05	2.580E+05
Y-93	2.620E+05	2.620E+05	2.620E+05	2.620E+05	2.620E+05	2.620E+05	3.580E+05	2.620E+05
ZR-95	3.430E+08	3.430E+08	3.430E+08	3.430E+08	3.430E+08	3.430E+08	3.980E+08	3.430E+08
ZR-97	4.230E+06	4.230E+06	4.230E+06	4.230E+06	4.230E+06	4.230E+06	4.920E+06	4.230E+06
NB-95	1.950E+08	1.950E+08	1.950E+08	1.950E+08	1.950E+08	1.950E+08	2.300E+08	1.950E+08
MO-99	5.710E+06	5.710E+06	5.710E+06	5.710E+06	5.710E+06	5.710E+06	6.610E+06	5.710E+06
TC-99M	2.630E+05	2.630E+05	2.630E+05	2.630E+05	2.630E+05	2.630E+05	3.010E+05	2.630E+05
TC-101	2.910E+04	2.910E+04	2.910E+04	2.910E+04	2.910E+04	2.910E+04	3.230E+04	2.910E+04
RU-103	1.540E+08	1.540E+08	1.540E+08	1.540E+08	1.540E+08	1.540E+08	1.800E+08	1.540E+08
RU-105	9.090E+05	9.090E+05	9.090E+05	9.090E+05	9.090E+05	9.090E+05	1.030E+06	9.090E+05
RU-106	2.990E+08	2.990E+08	2.990E+08	2.990E+08	2.990E+08	2.990E+08	3.590E+08	2.990E+08
AG-110M	3.120E+09	3.120E+09	3.120E+09	3.120E+09	3.120E+09	3.120E+09	3.650E+09	3.120E+09
TE-125M	2.190E+06	2.190E+06	2.190E+06	2.190E+06	2.190E+06	2.190E+06	3.000E+06	2.190E+06
TE-127	4.250E+03	4.250E+03	4.250E+03	4.250E+03	4.250E+03	4.250E+03	4.680E+03	4.250E+03
TE-127M	1.180E+05	1.180E+05	1.180E+05	1.180E+05	1.180E+05	1.180E+05	1.390E+05	1.180E+05
TE-129	3.750E+04	3.750E+04	3.750E+04	3.750E+04	3.750E+04	3.750E+04	4.430E+04	3.750E+04
TE-129M	2.820E+07	2.820E+07	2.820E+07	2.820E+07	2.820E+07	2.820E+07	3.300E+07	2.820E+07
TE-131	4.170E+04	4.170E+04	4.170E+04	4.170E+04	4.170E+04	4.170E+04	4.930E+07	4.170E+04
TE-131M	1.150E+07	1.150E+07	1.150E+07	1.150E+07	1.150E+07	1.150E+07	1.350E+07	1.150E+07
TE-132	6.050E+06	6.050E+06	6.050E+06	6.050E+06	6.050E+06	6.050E+06	7.120E+06	6.050E+06
I-130	7.870E+06	7.870E+06	7.870E+06	7.870E+06	7.870E+06	7.870E+06	9.560E+06	7.870E+06

APPENDIX B

P_i Dose Factors for use in the Gaseous Release Rate Limit Calculations

Agegroup:	INFANT	Pathway:	Ground Plane Deposition (GPD)			Units:	m^2·mrem/yr / mCi/sec	
Nuclide	**Bone**	**Liver**	**Thyroid**	**Kidney**	**Lung**	**Gilli**	**Skin**	**Total Body**
I-131	2.460E+07	2.460E+07	2.460E+07	2.460E+07	2.460E+07	2.460E+07	2.980E+07	2.460E+07
I-132	1.780E+06	1.780E+06	1.780E+06	1.780E+06	1.780E+06	1.780E+06	2.090E+06	1.780E+06
I-133	3.500E+06	3.500E+06	3.500E+06	3.500E+06	3.500E+06	3.500E+06	4.260E+06	3.500E+06
I-134	6.380E+05	6.380E+05	6.380E+05	6.380E+05	6.380E+05	6.380E+05	7.580E+05	6.380E+05
I-135	3.610E+06	3.610E+06	3.610E+06	3.610E+06	3.610E+06	3.610E+06	4.210E+06	3.610E+06
CS-134	2.810E+09	2.810E+09	2.810E+09	2.810E+09	2.810E+09	2.810E+09	3.280E+09	2.810E+09
CS-136	2.160E+08	2.160E+08	2.160E+08	2.160E+08	2.160E+08	2.160E+08	2.440E+08	2.160E+08
CS-137	1.150E+09	1.150E+09	1.150E+09	1.150E+09	1.150E+09	1.150E+09	1.340E+09	1.150E+09
CS-138	5.130E+05	5.130E+05	5.130E+05	5.130E+05	5.130E+05	5.130E+05	5.860E+05	5.130E+05
BA-139	1.510E+05	1.510E+05	1.510E+05	1.510E+05	1.510E+05	1.510E+05	1.700E+05	1.510E+05
BA-140	2.930E+07	2.930E+07	2.930E+07	2.930E+07	2.930E+07	2.930E+07	3.350E+07	2.930E+07
BA-141	5.960E+04	5.960E+04	5.960E+04	5.960E+04	5.960E+04	5.960E+04	6.790E+04	5.960E+04
BA-142	6.410E+04	6.410E+04	6.410E+04	6.410E+04	6.410E+04	6.410E+04	7.300E+04	6.410E+04
LA-140	2.740E+07	2.740E+07	2.740E+07	2.740E+07	2.740E+07	2.740E+07	3.110E+07	2.740E+07
LA-142	1.090E+06	1.090E+06	1.090E+06	1.090E+06	1.090E+06	1.090E+06	1.300E+06	1.090E+06
CE-141	1.950E+07	1.950E+07	1.950E+07	1.950E+07	1.950E+07	1.950E+07	2.200E+07	1.950E+07
CE-143	3.300E+06	3.300E+06	3.300E+06	3.300E+06	3.300E+06	3.300E+06	3.750E+06	3.300E+06
CE-144	5.850E+07	5.850E+07	5.850E+07	5.850E+07	5.850E+07	5.850E+07	6.760E+07	5.850E+07
PR-143	0.000E+00	0.000E+00	0.000E+00	0.000E+00	0.000E+00	0.000E+00	0.000E+00	0.000E+00
PR-144	2.620E+03	2.620E+03	2.620E+03	2.620E+03	2.620E+03	2.620E+03	3.010E+03	2.620E+03
ND-147	1.200E+07	1.200E+07	1.200E+07	1.200E+07	1.200E+07	1.200E+07	1.440E+07	1.200E+07
W-187	3.360E+06	3.360E+06	3.360E+06	3.360E+06	3.360E+06	3.360E+06	3.900E+06	3.360E+06
NP-239	2.440E+06	2.440E+06	2.440E+06	2.440E+06	2.440E+06	2.440E+06	2.830E+06	2.440E+06

APPENDIX C

A_i Adult Dose Factors for use in the Liquid Dose Calculations

Agegroup:	ADULT	Pathway:	Potable Water (PWtr)			Units:	mrem/hr / mCi/ml	
Nuclide	**Bone**	**Liver**	**Thyroid**	**Kidney**	**Lung**	**Gilli**	**Skin**	**Total Body**
H-3	0.000E+00	8.740E+00	8.740E+00	8.740E+00	8.740E+00	8.740E+00	0.000E+00	8.740E+00
C-14	2.360E+02	4.730E+01	4.730E+01	4.730E+01	4.730E+01	4.730E+01	0.000E+00	4.730E+01
NA-24	8.140E+01	8.140E+01	8.140E+01	8.140E+01	8.140E+01	8.140E+01	0.000E+00	8.140E+01
P-32	1.570E+04	9.750E+02	0.000E+00	0.000E+00	0.000E+00	1.760E+03	0.000E+00	6.060E+02
CR-51	0.000E+00	0.000E+00	1.310E-01	4.820E-02	2.900E-01	5.500E+01	0.000E+00	2.190E-01
MN-54	0.000E+00	3.800E+02	0.000E+00	1.130E+02	0.000E+00	1.160E+03	0.000E+00	7.250E+01
MN-56	0.000E+00	3.800E-01	0.000E+00	4.820E-01	0.000E+00	1.210E+01	0.000E+00	6.740E-02
FE-55	2.290E+02	1.580E+02	0.000E+00	0.000E+00	8.820E+01	9.070E+01	0.000E+00	3.690E+01
FE-59	3.580E+02	8.420E+02	0.000E+00	0.000E+00	2.350E+02	2.810E+03	0.000E+00	3.230E+02
CO-58	0.000E+00	6.170E+01	0.000E+00	0.000E+00	0.000E+00	1.250E+03	0.000E+00	1.380E+02
CO-60	0.000E+00	1.780E+02	0.000E+00	0.000E+00	0.000E+00	3.340E+03	0.000E+00	3.930E+02
NI-63	1.080E+04	7.500E+02	0.000E+00	0.000E+00	0.000E+00	1.560E+02	0.000E+00	3.630E+02
NI-65	1.620E+00	2.100E-01	0.000E+00	0.000E+00	0.000E+00	5.340E+00	0.000E+00	9.600E-02
CU-64	0.000E+00	3.590E+00	0.000E+00	9.060E+00	0.000E+00	3.060E+02	0.000E+00	1.690E+00
ZN-65	4.020E+02	1.280E+03	0.000E+00	8.560E+02	0.000E+00	8.060E+02	0.000E+00	5.780E+02
ZN-69	1.070E-04	2.050E-04	0.000E+00	1.330E-04	0.000E+00	3.080E-05	0.000E+00	1.430E-05
BR-83	0.000E+00	0.000E+00	0.000E+00	0.000E+00	0.000E+00	1.480E-01	0.000E+00	1.030E-01
BR-84	0.000E+00	0.000E+00	0.000E+00	0.000E+00	0.000E+00	5.270E-12	0.000E+00	6.710E-07
BR-85	0.000E+00	0.000E+00	0.000E+00	0.000E+00	0.000E+00	0.000E+00	0.000E+00	4.380E-77
RB-86	0.000E+00	1.720E+03	0.000E+00	0.000E+00	0.000E+00	3.400E+02	0.000E+00	8.030E+02
RB-88	0.000E+00	3.360E-12	0.000E+00	0.000E+00	0.000E+00	4.640E-23	0.000E+00	1.780E-12
RB-89	0.000E+00	3.090E-14	0.000E+00	0.000E+00	0.000E+00	1.790E-27	0.000E+00	2.170E-14
SR-89	2.550E+04	0.000E+00	0.000E+00	0.000E+00	0.000E+00	4.080E+03	0.000E+00	7.310E+02
SR-90	6.310E+05	0.000E+00	0.000E+00	0.000E+00	0.000E+00	1.820E+04	0.000E+00	1.550E+05
SR-91	1.960E+02	0.000E+00	0.000E+00	0.000E+00	0.000E+00	9.350E+02	0.000E+00	7.930E+00

APPENDIX C

A_i Adult Dose Factors for use in the Liquid Dose Calculations

Agegroup:	ADULT	Pathway:	Potable Water (PWtr)			Units:	mrem/hr / mCi/ml	
Nuclide	**Bone**	**Liver**	**Thyroid**	**Kidney**	**Lung**	**Gilli**	**Skin**	**Total Body**
SR-92	8.290E+00	0.000E+00	0.000E+00	0.000E+00	0.000E+00	1.640E+02	0.000E+00	3.590E-01
Y-90	7.030E-01	0.000E+00	0.000E+00	0.000E+00	0.000E+00	7.460E+03	0.000E+00	1.890E-02
Y-91	1.170E+01	0.000E+00	0.000E+00	0.000E+00	0.000E+00	6.420E+03	0.000E+00	3.120E-01
Y-91M	3.360E-07	0.000E+00	0.000E+00	0.000E+00	0.000E+00	9.860E-07	0.000E+00	1.300E-08
Y-92	6.710E-03	0.000E+00	0.000E+00	0.000E+00	0.000E+00	1.170E+02	0.000E+00	1.960E-04
Y-93	9.770E-02	0.000E+00	0.000E+00	0.000E+00	0.000E+00	3.100E+03	0.000E+00	2.700E-03
ZR-95	2.520E+00	8.070E-01	0.000E+00	1.270E+00	0.000E+00	2.560E+03	0.000E+00	5.460E-01
ZR-97	8.540E-02	1.720E-02	0.000E+00	2.600E-02	0.000E+00	5.340E+03	0.000E+00	7.880E-03
NB-95	5.130E-01	2.850E-01	0.000E+00	2.820E-01	0.000E+00	1.730E+03	0.000E+00	1.530E-01
MO-99	0.000E+00	3.160E+02	0.000E+00	7.160E+02	0.000E+00	7.330E+02	0.000E+00	6.020E+01
TC-99M	5.160E-03	1.460E-02	0.000E+00	2.210E-01	7.140E-03	8.630E+00	0.000E+00	1.860E-01
TC-101	1.130E-17	1.630E-17	0.000E+00	2.930E-16	8.320E-18	4.890E-29	0.000E+00	1.600E-16
RU-103	1.530E+01	0.000E+00	0.000E+00	5.820E+01	0.000E+00	1.780E+03	0.000E+00	6.570E+00
RU-105	1.970E-01	0.000E+00	0.000E+00	2.540E+00	0.000E+00	1.200E+02	0.000E+00	7.760E-02
RU-106	2.290E+02	0.000E+00	0.000E+00	4.410E+02	0.000E+00	1.480E+04	0.000E+00	2.890E+01
AG-110M	1.330E+01	1.230E+01	0.000E+00	2.420E+01	0.000E+00	5.020E+03	0.000E+00	7.300E+00
TE-125M	2.220E+02	8.030E+01	6.670E+01	9.020E+02	0.000E+00	8.850E+02	0.000E+00	2.970E+01
TE-127	3.780E+00	1.360E+00	2.800E+00	1.540E+01	0.000E+00	2.980E+02	0.000E+00	8.170E-01
TE-127M	5.620E+02	2.010E+02	1.440E+02	2.280E+03	0.000E+00	1.880E+03	0.000E+00	6.840E+01
TE-129	1.920E-03	7.230E-04	1.480E-03	8.080E-03	0.000E+00	1.450E-03	0.000E+00	4.690E-04
TE-129M	9.470E+02	3.530E+02	3.250E+02	3.950E+03	0.000E+00	4.770E+03	0.000E+00	1.500E+02
TE-131	3.520E-09	1.470E-09	2.900E-09	1.540E-08	0.000E+00	4.990E-10	0.000E+00	1.110E-09
TE-131M	1.090E+02	5.340E+01	8.450E+01	5.400E+02	0.000E+00	5.300E+03	0.000E+00	4.450E+01
TE-132	1.880E+02	1.220E+02	1.350E+02	1.170E+03	0.000E+00	5.770E+03	0.000E+00	1.140E+02
I-130	3.210E+01	9.460E+01	8.020E+03	1.480E+02	0.000E+00	8.140E+01	0.000E+00	3.730E+01

APPENDIX C

A_i Adult Dose Factors for use in the Liquid Dose Calculations

Agegroup:	ADULT	Pathway:	Potable Water (PWtr)			Units:	mrem/hr / mCi/ml	
Nuclide	**Bone**	**Liver**	**Thyroid**	**Kidney**	**Lung**	**Gilli**	**Skin**	**Total Body**
I-131	3.320E+02	4.740E+02	1.550E+05	8.130E+02	0.000E+00	1.250E+02	0.000E+00	2.720E+02
I-132	4.540E-01	1.220E+00	4.250E+01	1.940E+00	0.000E+00	2.280E-01	0.000E+00	4.250E-01
I-133	7.920E+01	1.380E+02	2.020E+04	2.400E+02	0.000E+00	1.240E+02	0.000E+00	4.200E+01
I-134	6.580E-04	1.790E-03	3.100E-02	2.840E-03	0.000E+00	1.560E-06	0.000E+00	6.390E-04
I-135	1.050E+01	2.750E+01	1.810E+03	4.400E+01	0.000E+00	3.100E+01	0.000E+00	1.010E+01
CS-134	5.170E+03	1.230E+04	0.000E+00	3.980E+03	1.320E+03	2.150E+02	0.000E+00	1.010E+04
CS-136	5.280E+02	2.080E+03	0.000E+00	1.160E+03	1.590E+02	2.370E+02	0.000E+00	1.500E+03
CS-137	6.630E+03	9.070E+03	0.000E+00	3.080E+03	1.020E+03	1.760E+02	0.000E+00	5.940E+03
CS-138	8.450E-07	1.670E-06	0.000E+00	1.230E-06	1.210E-07	7.120E-12	0.000E+00	8.260E-07
BA-139	1.990E-02	1.420E-05	0.000E+00	1.330E-05	8.050E-06	3.530E-02	0.000E+00	5.830E-04
BA-140	1.640E+03	2.070E+00	0.000E+00	7.020E-01	1.180E+00	3.390E+03	0.000E+00	1.080E+02
BA-141	5.440E-12	4.120E-15	0.000E+00	3.830E-15	2.340E-15	2.570E-21	0.000E+00	1.840E-13
BA-142	6.290E-21	6.470E-24	0.000E+00	5.460E-24	3.660E-24	8.860E-39	0.000E+00	3.960E-22
LA-140	1.690E-01	8.530E-02	0.000E+00	0.000E+00	0.000E+00	6.260E+03	0.000E+00	2.250E-02
LA-142	5.720E-05	2.600E-05	0.000E+00	0.000E+00	0.000E+00	1.900E-01	0.000E+00	6.480E-06
CE-141	7.710E-01	5.210E-01	0.000E+00	2.420E-01	0.000E+00	1.990E+03	0.000E+00	5.910E-02
CE-143	1.070E-01	7.890E+01	0.000E+00	3.470E-02	0.000E+00	2.950E+03	0.000E+00	8.730E-03
CE-144	4.060E+01	1.700E+01	0.000E+00	1.010E+01	0.000E+00	1.370E+04	0.000E+00	2.180E+00
PR-143	7.460E-01	2.990E-01	0.000E+00	1.730E-01	0.000E+00	3.270E+03	0.000E+00	3.700E-02
PR-144	7.350E-16	3.050E-16	0.000E+00	1.720E-16	0.000E+00	1.060E-22	0.000E+00	3.730E-17
ND-147	5.070E-01	5.860E-01	0.000E+00	3.430E-01	0.000E+00	2.810E+03	0.000E+00	3.510E-02
W-187	6.050E+00	5.050E+00	0.000E+00	0.000E+00	0.000E+00	1.660E+03	0.000E+00	1.770E+00
NP-239	8.550E-02	8.400E-03	0.000E+00	2.620E-02	0.000E+00	1.720E+03	0.000E+00	4.630E-03

APPENDIX C

A_i Adult Dose Factors for use in the Liquid Dose Calculations

Agegroup:	ADULT	Pathway:	Fresh Water Fish - Sport (FFSP)			Units:	mrem/hr / mCi/ml	
Nuclide	**Bone**	**Liver**	**Thyroid**	**Kidney**	**Lung**	**Gilli**	**Skin**	**Total Body**
H-3	0.000E+00	2.260E-01	2.260E-01	2.260E-01	2.260E-01	2.260E-01	0.000E+00	2.260E-01
C-14	3.130E+04	6.260E+03	6.260E+03	6.260E+03	6.260E+03	6.260E+03	0.000E+00	6.260E+03
NA-24	1.350E+02	1.350E+02	1.350E+02	1.350E+02	1.350E+02	1.350E+02	0.000E+00	1.350E+02
P-32	1.320E+06	8.210E+04	0.000E+00	0.000E+00	0.000E+00	1.480E+05	0.000E+00	5.100E+04
CR-51	0.000E+00	0.000E+00	7.420E-01	2.740E-01	1.650E+00	3.120E+02	0.000E+00	1.240E+00
MN-54	0.000E+00	4.370E+03	0.000E+00	1.300E+03	0.000E+00	1.340E+04	0.000E+00	8.330E+02
MN-56	0.000E+00	1.730E-01	0.000E+00	2.200E-01	0.000E+00	5.530E+00	0.000E+00	3.070E-02
FE-55	6.580E+02	4.550E+02	0.000E+00	0.000E+00	2.540E+02	2.610E+02	0.000E+00	1.060E+02
FE-59	1.020E+03	2.400E+03	0.000E+00	0.000E+00	6.720E+02	8.010E+03	0.000E+00	9.220E+02
CO-58	0.000E+00	8.830E+01	0.000E+00	0.000E+00	0.000E+00	1.790E+03	0.000E+00	1.980E+02
CO-60	0.000E+00	2.560E+02	0.000E+00	0.000E+00	0.000E+00	4.810E+03	0.000E+00	5.650E+02
NI-63	3.110E+04	2.160E+03	0.000E+00	0.000E+00	0.000E+00	4.500E+02	0.000E+00	1.040E+03
NI-65	1.720E-01	2.230E-02	0.000E+00	0.000E+00	0.000E+00	5.660E-01	0.000E+00	1.020E-02
CU-64	0.000E+00	2.680E+00	0.000E+00	6.760E+00	0.000E+00	2.290E+02	0.000E+00	1.260E+00
ZN-65	2.310E+04	7.350E+04	0.000E+00	4.920E+04	0.000E+00	4.630E+04	0.000E+00	3.320E+04
ZN-69	7.730E-07	1.480E-06	0.000E+00	9.610E-07	0.000E+00	2.220E-07	0.000E+00	1.030E-07
BR-83	0.000E+00	0.000E+00	0.000E+00	0.000E+00	0.000E+00	5.500E-02	0.000E+00	3.820E-02
BR-84	0.000E+00	0.000E+00	0.000E+00	0.000E+00	0.000E+00	9.850E-18	0.000E+00	1.250E-12
BR-85	0.000E+00	0.000E+00	0.000E+00	0.000E+00	0.000E+00	0.000E+00	0.000E+00	0.000E+00
RB-86	0.000E+00	9.730E+04	0.000E+00	0.000E+00	0.000E+00	1.920E+04	0.000E+00	4.530E+04
RB-88	0.000E+00	1.290E-22	0.000E+00	0.000E+00	0.000E+00	1.780E-33	0.000E+00	6.830E-23
RB-89	0.000E+00	1.640E-26	0.000E+00	0.000E+00	0.000E+00	9.560E-40	0.000E+00	1.160E-26
SR-89	2.180E+04	0.000E+00	0.000E+00	0.000E+00	0.000E+00	3.500E+03	0.000E+00	6.260E+02
SR-90	5.440E+05	0.000E+00	0.000E+00	0.000E+00	0.000E+00	1.570E+04	0.000E+00	1.340E+05
SR-91	7.050E+01	0.000E+00	0.000E+00	0.000E+00	0.000E+00	3.360E+02	0.000E+00	2.850E+00

APPENDIX C

A_i Adult Dose Factors for use in the Liquid Dose Calculations

Agegroup:	ADULT	Pathway:	Fresh Water Fish - Sport (FFSP)			Units:	mrem/hr / mCi/ml	
Nuclide	**Bone**	**Liver**	**Thyroid**	**Kidney**	**Lung**	**Gilli**	**Skin**	**Total Body**
SR-92	3.320E-01	0.000E+00	0.000E+00	0.000E+00	0.000E+00	6.570E+00	0.000E+00	1.430E-02
Y-90	4.440E-01	0.000E+00	0.000E+00	0.000E+00	0.000E+00	4.710E+03	0.000E+00	1.190E-02
Y-91	8.340E+00	0.000E+00	0.000E+00	0.000E+00	0.000E+00	4.590E+03	0.000E+00	2.230E-01
Y-91M	1.070E-11	0.000E+00	0.000E+00	0.000E+00	0.000E+00	3.150E-11	0.000E+00	4.150E-13
Y-92	4.600E-04	0.000E+00	0.000E+00	0.000E+00	0.000E+00	8.060E+00	0.000E+00	1.340E-05
Y-93	3.080E-02	0.000E+00	0.000E+00	0.000E+00	0.000E+00	9.770E+02	0.000E+00	8.500E-04
ZR-95	2.380E-01	7.620E-02	0.000E+00	1.200E-01	0.000E+00	2.410E+02	0.000E+00	5.160E-02
ZR-97	4.960E-03	1.000E-03	0.000E+00	1.510E-03	0.000E+00	3.100E+02	0.000E+00	4.570E-04
NB-95	4.380E+02	2.440E+02	0.000E+00	2.410E+02	0.000E+00	1.480E+06	0.000E+00	1.310E+02
MO-99	0.000E+00	8.020E+01	0.000E+00	1.820E+02	0.000E+00	1.860E+02	0.000E+00	1.530E+01
TC-99M	5.590E-04	1.580E-03	0.000E+00	2.400E-02	7.740E-04	9.340E-01	0.000E+00	2.010E-02
TC-101	2.610E-33	3.760E-33	0.000E+00	6.770E-32	1.920E-33	1.130E-44	0.000E+00	3.690E-32
RU-103	4.350E+00	0.000E+00	0.000E+00	1.660E+01	0.000E+00	5.080E+02	0.000E+00	1.870E+00
RU-105	8.670E-03	0.000E+00	0.000E+00	1.120E-01	0.000E+00	5.300E+00	0.000E+00	3.420E-03
RU-106	6.570E+01	0.000E+00	0.000E+00	1.270E+02	0.000E+00	4.250E+03	0.000E+00	8.320E+00
AG-110M	8.790E-01	8.130E-01	0.000E+00	1.600E+00	0.000E+00	3.320E+02	0.000E+00	4.830E-01
TE-125M	2.540E+03	9.190E+02	7.630E+02	1.030E+04	0.000E+00	1.010E+04	0.000E+00	3.400E+02
TE-127	1.790E+01	6.440E+00	1.330E+01	7.300E+01	0.000E+00	1.410E+03	0.000E+00	3.880E+00
TE-127M	6.440E+03	2.300E+03	1.650E+03	2.620E+04	0.000E+00	2.160E+04	0.000E+00	7.850E+02
TE-129	1.630E-05	6.120E-06	1.250E-05	6.850E-05	0.000E+00	1.230E-05	0.000E+00	3.970E-06
TE-129M	1.080E+04	4.020E+03	3.710E+03	4.500E+04	0.000E+00	5.430E+04	0.000E+00	1.710E+03
TE-131	8.710E-17	3.640E-17	7.160E-17	3.820E-16	0.000E+00	1.230E-17	0.000E+00	2.750E-17
TE-131M	9.510E+02	4.650E+02	7.370E+02	4.710E+03	0.000E+00	4.620E+04	0.000E+00	3.880E+02
TE-132	1.950E+03	1.260E+03	1.390E+03	1.210E+04	0.000E+00	5.960E+04	0.000E+00	1.180E+03
I-130	7.050E+00	2.080E+01	1.760E+03	3.250E+01	0.000E+00	1.790E+01	0.000E+00	8.210E+00

APPENDIX C

A_i Adult Dose Factors for use in the Liquid Dose Calculations

Agegroup:	ADULT	Pathway:	Fresh Water Fish - Sport (FFSP)			Units:	mrem/hr / mCi/ml	
Nuclide	**Bone**	**Liver**	**Thyroid**	**Kidney**	**Lung**	**Gilli**	**Skin**	**Total Body**
I-131	1.370E+02	1.960E+02	6.420E+04	3.360E+02	0.000E+00	5.170E+01	0.000E+00	1.120E+02
I-132	5.270E-03	1.410E-02	4.940E-01	2.250E-02	0.000E+00	2.650E-03	0.000E+00	4.940E-03
I-133	2.290E+01	3.990E+01	5.860E+03	6.950E+01	0.000E+00	3.580E+01	0.000E+00	1.210E+01
I-134	2.120E-08	5.750E-08	9.960E-07	9.140E-08	0.000E+00	5.010E-11	0.000E+00	2.060E-08
I-135	1.290E+00	3.370E+00	2.220E+02	5.410E+00	0.000E+00	3.810E+00	0.000E+00	1.240E+00
CS-134	2.980E+05	7.080E+05	0.000E+00	2.290E+05	7.610E+04	1.240E+04	0.000E+00	5.790E+05
CS-136	2.960E+04	1.170E+05	0.000E+00	6.500E+04	8.900E+03	1.330E+04	0.000E+00	8.400E+04
CS-137	3.820E+05	5.220E+05	0.000E+00	1.770E+05	5.890E+04	1.010E+04	0.000E+00	3.420E+05
CS-138	8.940E-12	1.770E-11	0.000E+00	1.300E-11	1.280E-12	7.530E-17	0.000E+00	8.750E-12
BA-139	5.650E-06	4.030E-09	0.000E+00	3.760E-09	2.280E-09	1.000E-05	0.000E+00	1.660E-07
BA-140	1.840E+02	2.310E-01	0.000E+00	7.860E-02	1.320E-01	3.790E+02	0.000E+00	1.210E+01
BA-141	8.700E-25	6.580E-28	0.000E+00	6.120E-28	3.730E-28	4.100E-34	0.000E+00	2.940E-26
BA-142	2.570E-42	2.640E-45	0.000E+00	2.230E-45	1.490E-45	3.620E-60	0.000E+00	1.610E-43
LA-140	9.900E-02	4.990E-02	0.000E+00	0.000E+00	0.000E+00	3.660E+03	0.000E+00	1.320E-02
LA-142	2.210E-07	1.000E-07	0.000E+00	0.000E+00	0.000E+00	7.330E-04	0.000E+00	2.500E-08
CE-141	2.190E-02	1.480E-02	0.000E+00	6.890E-03	0.000E+00	5.670E+01	0.000E+00	1.680E-03
CE-143	2.380E-03	1.760E+00	0.000E+00	7.760E-04	0.000E+00	6.590E+01	0.000E+00	1.950E-04
CE-144	1.170E+00	4.870E-01	0.000E+00	2.890E-01	0.000E+00	3.940E+02	0.000E+00	6.260E-02
PR-143	5.230E-01	2.100E-01	0.000E+00	1.210E-01	0.000E+00	2.290E+03	0.000E+00	2.590E-02
PR-144	1.550E-28	6.440E-29	0.000E+00	3.630E-29	0.000E+00	2.230E-35	0.000E+00	7.880E-30
ND-147	3.530E-01	4.080E-01	0.000E+00	2.390E-01	0.000E+00	1.960E+03	0.000E+00	2.440E-02
W-187	1.470E+02	1.230E+02	0.000E+00	0.000E+00	0.000E+00	4.030E+04	0.000E+00	4.300E+01
NP-239	2.120E-02	2.090E-03	0.000E+00	6.510E-03	0.000E+00	4.280E+02	0.000E+00	1.150E-03

APPENDIX C

A_i Adult Dose Factors for use in the Liquid Dose Calculations

Agegroup:	ADULT	Pathway:	Shoreline Sediment (SHDp)			Units:	mrem/hr / mCi/ml	
Nuclide	**Bone**	**Liver**	**Thyroid**	**Kidney**	**Lung**	**Gilli**	**Skin**	**Total Body**
H-3	0.000E+00	0.000E+00	0.000E+00	0.000E+00	0.000E+00	0.000E+00	0.000E+00	0.000E+00
C-14	0.000E+00	0.000E+00	0.000E+00	0.000E+00	0.000E+00	0.000E+00	0.000E+00	0.000E+00
NA-24	6.410E-01	6.410E-01	6.410E-01	6.410E-01	6.410E-01	6.410E-01	7.440E-01	6.410E-01
P-32	0.000E+00	0.000E+00	0.000E+00	0.000E+00	0.000E+00	0.000E+00	0.000E+00	0.000E+00
CR-51	2.500E-01	2.500E-01	2.500E-01	2.500E-01	2.500E-01	2.500E-01	2.960E-01	2.500E-01
MN-54	7.440E+01	7.440E+01	7.440E+01	7.440E+01	7.440E+01	7.440E+01	8.720E+01	7.440E+01
MN-56	4.840E-02	4.840E-02	4.840E-02	4.840E-02	4.840E-02	4.840E-02	5.720E-02	4.840E-02
FE-55	0.000E+00	0.000E+00	0.000E+00	0.000E+00	0.000E+00	0.000E+00	0.000E+00	0.000E+00
FE-59	1.460E+01	1.460E+01	1.460E+01	1.460E+01	1.460E+01	1.460E+01	1.720E+01	1.460E+01
CO-58	2.030E+01	2.030E+01	2.030E+01	2.030E+01	2.030E+01	2.030E+01	2.380E+01	2.030E+01
CO-60	1.150E+03	1.150E+03	1.150E+03	1.150E+03	1.150E+03	1.150E+03	1.360E+03	1.150E+03
NI-63	0.000E+00	0.000E+00	0.000E+00	0.000E+00	0.000E+00	0.000E+00	0.000E+00	0.000E+00
NI-65	1.590E-02	1.590E-02	1.590E-02	1.590E-02	1.590E-02	1.590E-02	1.850E-02	1.590E-02
CU-64	3.260E-02	3.260E-02	3.260E-02	3.260E-02	3.260E-02	3.260E-02	3.690E-02	3.260E-02
ZN-65	4.010E+01	4.010E+01	4.010E+01	4.010E+01	4.010E+01	4.010E+01	4.610E+01	4.010E+01
ZN-69	0.000E+00	0.000E+00	0.000E+00	0.000E+00	0.000E+00	0.000E+00	0.000E+00	0.000E+00
BR-83	2.620E-04	2.620E-04	2.620E-04	2.620E-04	2.620E-04	2.620E-04	3.800E-04	2.620E-04
BR-84	1.090E-02	1.090E-02	1.090E-02	1.090E-02	1.090E-02	1.090E-02	1.270E-02	1.090E-02
BR-85	0.000E+00	0.000E+00	0.000E+00	0.000E+00	0.000E+00	0.000E+00	0.000E+00	0.000E+00
RB-86	4.820E-01	4.820E-01	4.820E-01	4.820E-01	4.820E-01	4.820E-01	5.510E-01	4.820E-01
RB-88	1.780E-03	1.780E-03	1.780E-03	1.780E-03	1.780E-03	1.780E-03	2.030E-03	1.780E-03
RB-89	6.600E-03	6.600E-03	6.600E-03	6.600E-03	6.600E-03	6.600E-03	7.920E-03	6.600E-03
SR-89	1.160E-03	1.160E-03	1.160E-03	1.160E-03	1.160E-03	1.160E-03	1.350E-03	1.160E-03
SR-90	0.000E+00	0.000E+00	0.000E+00	0.000E+00	0.000E+00	0.000E+00	0.000E+00	0.000E+00
SR-91	1.150E-01	1.150E-01	1.150E-01	1.150E-01	1.150E-01	1.150E-01	1.350E-01	1.150E-01

APPENDIX C

A_i Adult Dose Factors for use in the Liquid Dose Calculations

Agegroup:	ADULT	Pathway:	Shoreline Sediment (SHDp)			Units:	mrem/hr / mCi/ml	
Nuclide	**Bone**	**Liver**	**Thyroid**	**Kidney**	**Lung**	**Gilli**	**Skin**	**Total Body**
SR-92	4.170E-02	4.170E-02	4.170E-02	4.170E-02	4.170E-02	4.170E-02	4.630E-02	4.170E-02
Y-90	2.410E-04	2.410E-04	2.410E-04	2.410E-04	2.410E-04	2.410E-04	2.850E-04	2.410E-04
Y-91	5.760E-02	5.760E-02	5.760E-02	5.760E-02	5.760E-02	5.760E-02	6.480E-02	5.760E-02
Y-91M	5.380E-03	5.380E-03	5.380E-03	5.380E-03	5.380E-03	5.380E-03	6.230E-03	5.380E-03
Y-92	9.680E-03	9.680E-03	9.680E-03	9.680E-03	9.680E-03	9.680E-03	1.150E-02	9.680E-03
Y-93	9.840E-03	9.840E-03	9.840E-03	9.840E-03	9.840E-03	9.840E-03	1.350E-02	9.840E-03
ZR-95	1.310E+01	1.310E+01	1.310E+01	1.310E+01	1.310E+01	1.310E+01	1.520E+01	1.310E+01
ZR-97	1.590E-01	1.590E-01	1.590E-01	1.590E-01	1.590E-01	1.590E-01	1.850E-01	1.590E-01
NB-95	7.340E+00	7.340E+00	7.340E+00	7.340E+00	7.340E+00	7.340E+00	8.630E+00	7.340E+00
MO-99	2.140E-01	2.140E-01	2.140E-01	2.140E-01	2.140E-01	2.140E-01	2.480E-01	2.140E-01
TC-99M	9.880E-03	9.880E-03	9.880E-03	9.880E-03	9.880E-03	9.880E-03	1.130E-02	9.880E-03
TC-101	1.090E-03	1.090E-03	1.090E-03	1.090E-03	1.090E-03	1.090E-03	1.210E-03	1.090E-03
RU-103	5.810E+00	5.810E+00	5.810E+00	5.810E+00	5.810E+00	5.810E+00	6.780E+00	5.810E+00
RU-105	3.420E-02	3.420E-02	3.420E-02	3.420E-02	3.420E-02	3.420E-02	3.870E-02	3.420E-02
RU-106	2.270E+01	2.270E+01	2.270E+01	2.270E+01	2.270E+01	2.270E+01	2.720E+01	2.270E+01
AG-110M	1.850E+02	1.850E+02	1.850E+02	1.850E+02	1.850E+02	1.850E+02	2.150E+02	1.850E+02
TE-125M	8.330E-02	8.330E-02	8.330E-02	8.330E-02	8.330E-02	8.330E-02	1.140E-01	8.330E-02
TE-127	1.600E-04	1.600E-04	1.600E-04	1.600E-04	1.600E-04	1.600E-04	1.760E-04	1.600E-04
TE-127M	4.920E-03	4.920E-03	4.920E-03	4.920E-03	4.920E-03	4.920E-03	5.810E-03	4.920E-03
TE-129	1.410E-03	1.410E-03	1.410E-03	1.410E-03	1.410E-03	1.410E-03	1.670E-03	1.410E-03
TE-129M	1.060E+00	1.060E+00	1.060E+00	1.060E+00	1.060E+00	1.060E+00	1.240E+00	1.060E+00
TE-131	1.570E-03	1.570E-03	1.570E-03	1.570E-03	1.570E-03	1.570E-03	1.850E+00	1.570E-03
TE-131M	4.310E-01	4.310E-01	4.310E-01	4.310E-01	4.310E-01	4.310E-01	5.080E-01	4.310E-01
TE-132	2.270E-01	2.270E-01	2.270E-01	2.270E-01	2.270E-01	2.270E-01	2.670E-01	2.270E-01
I-130	2.960E-01	2.960E-01	2.960E-01	2.960E-01	2.960E-01	2.960E-01	3.590E-01	2.960E-01

APPENDIX C

A_i Adult Dose Factors for use in the Liquid Dose Calculations

Agegroup:	ADULT	Pathway:	Shoreline Sediment (SHDp)			Units:	mrem/hr / mCi/ml	
Nuclide	**Bone**	**Liver**	**Thyroid**	**Kidney**	**Lung**	**Gilli**	**Skin**	**Total Body**
I-131	9.240E-01	9.240E-01	9.240E-01	9.240E-01	9.240E-01	9.240E-01	1.120E+00	9.240E-01
I-132	6.680E-02	6.680E-02	6.680E-02	6.680E-02	6.680E-02	6.680E-02	7.860E-02	6.680E-02
I-133	1.320E-01	1.320E-01	1.320E-01	1.320E-01	1.320E-01	1.320E-01	1.600E-01	1.320E-01
I-134	2.400E-02	2.400E-02	2.400E-02	2.400E-02	2.400E-02	2.400E-02	2.850E-02	2.400E-02
I-135	1.360E-01	1.360E-01	1.360E-01	1.360E-01	1.360E-01	1.360E-01	1.580E-01	1.360E-01
CS-134	3.680E+02	3.680E+02	3.680E+02	3.680E+02	3.680E+02	3.680E+02	4.300E+02	3.680E+02
CS-136	8.100E+00	8.100E+00	8.100E+00	8.100E+00	8.100E+00	8.100E+00	9.180E+00	8.100E+00
CS-137	5.520E+02	5.520E+02	5.520E+02	5.520E+02	5.520E+02	5.520E+02	6.440E+02	5.520E+02
CS-138	1.930E-02	1.930E-02	1.930E-02	1.930E-02	1.930E-02	1.930E-02	2.200E-02	1.930E-02
BA-139	5.680E-03	5.680E-03	5.680E-03	5.680E-03	5.680E-03	5.680E-03	6.390E-03	5.680E-03
BA-140	1.100E+00	1.100E+00	1.100E+00	1.100E+00	1.100E+00	1.100E+00	1.260E+00	1.100E+00
BA-141	2.240E-03	2.240E-03	2.240E-03	2.240E-03	2.240E-03	2.240E-03	2.550E-03	2.240E-03
BA-142	2.410E-03	2.410E-03	2.410E-03	2.410E-03	2.410E-03	2.410E-03	2.740E-03	2.410E-03
LA-140	1.030E+00	1.030E+00	1.030E+00	1.030E+00	1.030E+00	1.030E+00	1.170E+00	1.030E+00
LA-142	4.080E-02	4.080E-02	4.080E-02	4.080E-02	4.080E-02	4.080E-02	4.890E-02	4.080E-02
CE-141	7.330E-01	7.330E-01	7.330E-01	7.330E-01	7.330E-01	7.330E-01	8.270E-01	7.330E-01
CE-143	1.240E-01	1.240E-01	1.240E-01	1.240E-01	1.240E-01	1.240E-01	1.410E-01	1.240E-01
CE-144	3.730E+00	3.730E+00	3.730E+00	3.730E+00	3.730E+00	3.730E+00	4.320E+00	3.730E+00
PR-143	0.000E+00	0.000E+00	0.000E+00	0.000E+00	0.000E+00	0.000E+00	0.000E+00	0.000E+00
PR-144	9.850E-05	9.850E-05	9.850E-05	9.850E-05	9.850E-05	9.850E-05	1.130E-04	9.850E-05
ND-147	4.510E-01	4.510E-01	4.510E-01	4.510E-01	4.510E-01	4.510E-01	5.410E-01	4.510E-01
W-187	1.260E-01	1.260E-01	1.260E-01	1.260E-01	1.260E-01	1.260E-01	1.470E-01	1.260E-01
NP-239	9.180E-02	9.180E-02	9.180E-02	9.180E-02	9.180E-02	9.180E-02	1.060E-01	9.180E-02

APPENDIX D

A_i Teen Factors for use in the Liquid Dose Calculations

Agegroup:	TEEN	Pathway:	Potable Water (PWtr)			Units:	mrem/hr / mCi/ml	
Nuclide	**Bone**	**Liver**	**Thyroid**	**Kidney**	**Lung**	**Gilli**	**Skin**	**Total Body**
H-3	0.000E+00	6.160E+00	6.160E+00	6.160E+00	6.160E+00	6.160E+00	0.000E+00	6.160E+00
C-14	2.360E+02	4.720E+01	4.720E+01	4.720E+01	4.720E+01	4.720E+01	0.000E+00	4.720E+01
NA-24	7.690E+01	7.690E+01	7.690E+01	7.690E+01	7.690E+01	7.690E+01	0.000E+00	7.690E+01
P-32	1.570E+04	9.700E+02	0.000E+00	0.000E+00	0.000E+00	1.320E+03	0.000E+00	6.070E+02
CR-51	0.000E+00	0.000E+00	1.150E-01	4.530E-02	2.950E-01	3.470E+01	0.000E+00	2.070E-01
MN-54	0.000E+00	3.430E+02	0.000E+00	1.020E+02	0.000E+00	7.030E+02	0.000E+00	6.790E+01
MN-56	0.000E+00	3.640E-01	0.000E+00	4.610E-01	0.000E+00	2.400E+01	0.000E+00	6.480E-02
FE-55	2.200E+02	1.560E+02	0.000E+00	0.000E+00	9.880E+01	6.740E+01	0.000E+00	3.630E+01
FE-59	3.390E+02	7.900E+02	0.000E+00	0.000E+00	2.490E+02	1.870E+03	0.000E+00	3.050E+02
CO-58	0.000E+00	5.620E+01	0.000E+00	0.000E+00	0.000E+00	7.750E+02	0.000E+00	1.300E+02
CO-60	0.000E+00	1.630E+02	0.000E+00	0.000E+00	0.000E+00	2.130E+03	0.000E+00	3.680E+02
NI-63	1.030E+04	7.270E+02	0.000E+00	0.000E+00	0.000E+00	1.160E+02	0.000E+00	3.490E+02
NI-65	1.610E+00	2.050E-01	0.000E+00	0.000E+00	0.000E+00	1.110E+01	0.000E+00	9.350E-02
CU-64	0.000E+00	3.470E+00	0.000E+00	8.770E+00	0.000E+00	2.690E+02	0.000E+00	1.630E+00
ZN-65	3.340E+02	1.160E+03	0.000E+00	7.430E+02	0.000E+00	4.920E+02	0.000E+00	5.420E+02
ZN-69	1.070E-04	2.040E-04	0.000E+00	1.330E-04	0.000E+00	3.760E-04	0.000E+00	1.430E-05
BR-83	0.000E+00	0.000E+00	0.000E+00	0.000E+00	0.000E+00	0.000E+00	0.000E+00	1.030E-01
BR-84	0.000E+00	0.000E+00	0.000E+00	0.000E+00	0.000E+00	0.000E+00	0.000E+00	6.500E-07
BR-85	0.000E+00	0.000E+00	0.000E+00	0.000E+00	0.000E+00	0.000E+00	0.000E+00	4.360E-77
RB-86	0.000E+00	1.700E+03	0.000E+00	0.000E+00	0.000E+00	2.520E+02	0.000E+00	7.990E+02
RB-88	0.000E+00	3.300E-12	0.000E+00	0.000E+00	0.000E+00	2.830E-19	0.000E+00	1.760E-12
RB-89	0.000E+00	2.960E-14	0.000E+00	0.000E+00	0.000E+00	4.540E-23	0.000E+00	2.090E-14
SR-89	2.540E+04	0.000E+00	0.000E+00	0.000E+00	0.000E+00	3.030E+03	0.000E+00	7.280E+02
SR-90	4.830E+05	0.000E+00	0.000E+00	0.000E+00	0.000E+00	1.350E+04	0.000E+00	1.190E+05
SR-91	1.950E+02	0.000E+00	0.000E+00	0.000E+00	0.000E+00	8.850E+02	0.000E+00	7.760E+00

APPENDIX D

A_i Teen Factors for use in the Liquid Dose Calculations

Agegroup:	TEEN	Pathway:	Potable Water (PWtr)			Units:	mrem/hr / mCi/ml	
Nuclide	**Bone**	**Liver**	**Thyroid**	**Kidney**	**Lung**	**Gilli**	**Skin**	**Total Body**
SR-92	8.220E+00	0.000E+00	0.000E+00	0.000E+00	0.000E+00	2.090E+02	0.000E+00	3.500E-01
Y-90	7.000E-01	0.000E+00	0.000E+00	0.000E+00	0.000E+00	5.770E+03	0.000E+00	1.880E-02
Y-91	1.160E+01	0.000E+00	0.000E+00	0.000E+00	0.000E+00	4.760E+03	0.000E+00	3.120E-01
Y-91M	3.330E-07	0.000E+00	0.000E+00	0.000E+00	0.000E+00	1.570E-05	0.000E+00	1.270E-08
Y-92	6.710E-03	0.000E+00	0.000E+00	0.000E+00	0.000E+00	1.840E+02	0.000E+00	1.940E-04
Y-93	9.760E-02	0.000E+00	0.000E+00	0.000E+00	0.000E+00	2.980E+03	0.000E+00	2.670E-03
ZR-95	2.380E+00	7.520E-01	0.000E+00	1.100E+00	0.000E+00	1.730E+03	0.000E+00	5.170E-01
ZR-97	8.420E-02	1.670E-02	0.000E+00	2.530E-02	0.000E+00	4.510E+03	0.000E+00	7.670E-03
NB-95	4.730E-01	2.630E-01	0.000E+00	2.540E-01	0.000E+00	1.120E+03	0.000E+00	1.440E-01
MO-99	0.000E+00	3.090E+02	0.000E+00	7.070E+02	0.000E+00	5.530E+02	0.000E+00	5.890E+01
TC-99M	4.840E-03	1.350E-02	0.000E+00	2.010E-01	7.500E-03	8.870E+00	0.000E+00	1.750E-01
TC-101	1.120E-17	1.590E-17	0.000E+00	2.880E-16	9.700E-18	2.720E-24	0.000E+00	1.560E-16
RU-103	1.470E+01	0.000E+00	0.000E+00	5.180E+01	0.000E+00	1.230E+03	0.000E+00	6.280E+00
RU-105	1.940E-01	0.000E+00	0.000E+00	2.450E+00	0.000E+00	1.570E+02	0.000E+00	7.540E-02
RU-106	2.280E+02	0.000E+00	0.000E+00	4.390E+02	0.000E+00	1.090E+04	0.000E+00	2.870E+01
AG-110M	1.190E+01	1.130E+01	0.000E+00	2.150E+01	0.000E+00	3.160E+03	0.000E+00	6.850E+00
TE-125M	2.210E+02	7.980E+01	6.180E+01	0.000E+00	0.000E+00	6.530E+02	0.000E+00	2.960E+01
TE-127	3.790E+00	1.340E+00	2.610E+00	1.530E+01	0.000E+00	2.930E+02	0.000E+00	8.150E-01
TE-127M	5.600E+02	1.990E+02	1.330E+02	2.270E+03	0.000E+00	1.400E+03	0.000E+00	6.660E+01
TE-129	1.920E-03	7.150E-04	1.370E-03	8.040E-03	0.000E+00	1.050E-02	0.000E+00	4.660E-04
TE-129M	9.380E+02	3.480E+02	3.030E+02	3.920E+03	0.000E+00	3.520E+03	0.000E+00	1.480E+02
TE-131	3.490E-09	1.440E-09	2.690E-09	1.520E-08	0.000E+00	2.860E-10	0.000E+00	1.090E-09
TE-131M	1.080E+02	5.150E+01	7.750E+01	5.380E+02	0.000E+00	4.140E+03	0.000E+00	4.300E+01
TE-132	1.820E+02	1.150E+02	1.220E+02	1.110E+03	0.000E+00	3.660E+03	0.000E+00	1.090E+02
I-130	3.050E+01	8.830E+01	7.200E+03	1.360E+02	0.000E+00	6.790E+01	0.000E+00	3.530E+01

APPENDIX D

A_i Teen Factors for use in the Liquid Dose Calculations

Agegroup:	TEEN	Pathway:	Potable Water (PWtr)			Units:	mrem/hr / mCi/ml	
Nuclide	**Bone**	**Liver**	**Thyroid**	**Kidney**	**Lung**	**Gilli**	**Skin**	**Total Body**
I-131	3.260E+02	4.560E+02	1.330E+05	7.850E+02	0.000E+00	9.020E+01	0.000E+00	2.450E+02
I-132	4.360E-01	1.140E+00	3.850E+01	1.800E+00	0.000E+00	4.970E-01	0.000E+00	4.100E-01
I-133	7.830E+01	1.330E+02	1.860E+04	2.330E+02	0.000E+00	1.010E+02	0.000E+00	4.050E+01
I-134	6.330E-04	1.680E-03	2.800E-02	2.640E-03	0.000E+00	2.210E-05	0.000E+00	6.020E-04
I-135	1.010E+01	2.600E+01	1.670E+03	4.100E+01	0.000E+00	2.880E+01	0.000E+00	9.630E+00
CS-134	4.860E+03	1.140E+04	0.000E+00	3.640E+03	1.390E+03	1.420E+02	0.000E+00	5.310E+03
CS-136	4.860E+02	1.910E+03	0.000E+00	1.040E+03	1.640E+02	1.540E+02	0.000E+00	1.290E+03
CS-137	6.510E+03	8.660E+03	0.000E+00	2.950E+03	1.150E+03	1.230E+02	0.000E+00	3.020E+03
CS-138	8.300E-07	1.590E-06	0.000E+00	1.180E-06	1.370E-07	7.230E-10	0.000E+00	7.970E-07
BA-139	1.990E-02	1.400E-05	0.000E+00	1.320E-05	9.670E-06	1.780E-01	0.000E+00	5.810E-04
BA-140	1.610E+03	1.970E+00	0.000E+00	6.680E-01	1.320E+00	2.480E+03	0.000E+00	1.040E+02
BA-141	5.420E-12	4.050E-15	0.000E+00	3.760E-15	2.770E-15	1.150E-17	0.000E+00	1.810E-13
BA-142	6.170E-21	6.170E-24	0.000E+00	5.220E-24	4.100E-24	1.890E-32	0.000E+00	3.800E-22
LA-140	1.650E-01	8.090E-02	0.000E+00	0.000E+00	0.000E+00	4.640E+03	0.000E+00	2.150E-02
LA-142	5.590E-05	2.480E-05	0.000E+00	0.000E+00	0.000E+00	7.550E-01	0.000E+00	6.180E-06
CE-141	7.650E-01	5.110E-01	0.000E+00	2.400E-01	0.000E+00	1.460E+03	0.000E+00	5.870E-02
CE-143	1.060E-01	7.730E+01	0.000E+00	3.460E-02	0.000E+00	2.320E+03	0.000E+00	8.630E-03
CE-144	4.040E+01	1.670E+01	0.000E+00	9.990E+00	0.000E+00	1.020E+04	0.000E+00	2.170E+00
PR-143	7.420E-01	2.960E-01	0.000E+00	1.720E-01	0.000E+00	2.440E+03	0.000E+00	3.700E-02
PR-144	7.330E-16	3.000E-16	0.000E+00	1.720E-16	0.000E+00	8.080E-19	0.000E+00	3.720E-17
ND-147	5.280E-01	5.750E-01	0.000E+00	3.370E-01	0.000E+00	2.070E+03	0.000E+00	3.440E-02
W-187	5.990E+00	4.880E+00	0.000E+00	0.000E+00	0.000E+00	1.320E+03	0.000E+00	1.710E+00
NP-239	8.830E-02	8.330E-03	0.000E+00	2.610E-02	0.000E+00	1.340E+03	0.000E+00	4.630E-03

APPENDIX D

A_i Teen Dose Factors for use in the Liquid Dose Calculations

Agegroup:	TEEN	Pathway:	Fresh Water Fish - Sport (FFSP)			Units:	mrem/hr / mCi/ml	
Nuclide	**Bone**	**Liver**	**Thyroid**	**Kidney**	**Lung**	**Gilli**	**Skin**	**Total Body**
H-3	0.000E+00	1.740E-01	1.740E-01	1.740E-01	1.740E-01	1.740E-01	0.000E+00	1.740E-01
C-14	3.410E+04	6.810E+03	6.810E+03	6.810E+03	6.810E+03	6.810E+03	0.000E+00	6.810E+03
NA-24	1.390E+02	1.390E+02	1.390E+02	1.390E+02	1.390E+02	1.390E+02	0.000E+00	1.390E+02
P-32	1.440E+06	8.910E+04	0.000E+00	0.000E+00	0.000E+00	1.210E+05	0.000E+00	5.580E+04
CR-51	0.000E+00	0.000E+00	7.120E-01	2.810E-01	1.830E+00	2.150E+02	0.000E+00	1.280E+00
MN-54	0.000E+00	4.300E+03	0.000E+00	1.280E+03	0.000E+00	8.810E+03	0.000E+00	8.520E+02
MN-56	0.000E+00	1.810E-01	0.000E+00	2.300E-01	0.000E+00	1.190E+01	0.000E+00	3.230E-02
FE-55	6.890E+02	4.880E+02	0.000E+00	0.000E+00	3.100E+02	2.110E+02	0.000E+00	1.140E+02
FE-59	1.050E+03	2.460E+03	0.000E+00	0.000E+00	7.760E+02	5.820E+03	0.000E+00	9.500E+02
CO-58	0.000E+00	8.780E+01	0.000E+00	0.000E+00	0.000E+00	1.210E+03	0.000E+00	2.020E+02
CO-60	0.000E+00	2.560E+02	0.000E+00	0.000E+00	0.000E+00	3.340E+03	0.000E+00	5.770E+02
NI-63	3.230E+04	2.280E+03	0.000E+00	0.000E+00	0.000E+00	3.630E+02	0.000E+00	1.090E+03
NI-65	1.860E-01	2.370E-02	0.000E+00	0.000E+00	0.000E+00	1.290E+00	0.000E+00	1.080E-02
CU-64	0.000E+00	2.820E+00	0.000E+00	7.140E+00	0.000E+00	2.190E+02	0.000E+00	1.330E+00
ZN-65	2.100E+04	7.280E+04	0.000E+00	4.660E+04	0.000E+00	3.080E+04	0.000E+00	3.390E+04
ZN-69	8.410E-07	1.600E-06	0.000E+00	1.050E-06	0.000E+00	2.950E-06	0.000E+00	1.120E-07
BR-83	0.000E+00	0.000E+00	0.000E+00	0.000E+00	0.000E+00	0.000E+00	0.000E+00	4.160E-02
BR-84	0.000E+00	0.000E+00	0.000E+00	0.000E+00	0.000E+00	0.000E+00	0.000E+00	1.320E-12
BR-85	0.000E+00	0.000E+00	0.000E+00	0.000E+00	0.000E+00	0.000E+00	0.000E+00	0.000E+00
RB-86	0.000E+00	1.050E+05	0.000E+00	0.000E+00	0.000E+00	1.550E+04	0.000E+00	4.920E+04
RB-88	0.000E+00	1.380E-22	0.000E+00	0.000E+00	0.000E+00	1.180E-29	0.000E+00	7.360E-23
RB-89	0.000E+00	1.720E-26	0.000E+00	0.000E+00	0.000E+00	2.630E-35	0.000E+00	1.220E-26
SR-89	2.370E+04	0.000E+00	0.000E+00	0.000E+00	0.000E+00	2.830E+03	0.000E+00	6.800E+02
SR-90	4.540E+05	0.000E+00	0.000E+00	0.000E+00	0.000E+00	1.270E+04	0.000E+00	1.120E+05
SR-91	7.640E+01	0.000E+00	0.000E+00	0.000E+00	0.000E+00	3.470E+02	0.000E+00	3.040E+00

APPENDIX D

A_i Teen Dose Factors for use in the Liquid Dose Calculations

Agegroup:	TEEN	Pathway:	Fresh Water Fish - Sport (FFSP)			Units:	mrem/hr / mCi/ml	
Nuclide	**Bone**	**Liver**	**Thyroid**	**Kidney**	**Lung**	**Gilli**	**Skin**	**Total Body**
SR-92	3.590E-01	0.000E+00	0.000E+00	0.000E+00	0.000E+00	9.130E+00	0.000E+00	1.530E-02
Y-90	4.820E-01	0.000E+00	0.000E+00	0.000E+00	0.000E+00	3.980E+03	0.000E+00	1.300E-02
Y-91	9.060E+00	0.000E+00	0.000E+00	0.000E+00	0.000E+00	3.710E+03	0.000E+00	2.430E-01
Y-91M	1.160E-11	0.000E+00	0.000E+00	0.000E+00	0.000E+00	5.470E-10	0.000E+00	4.430E-13
Y-92	5.020E-04	0.000E+00	0.000E+00	0.000E+00	0.000E+00	1.380E+01	0.000E+00	1.450E-05
Y-93	3.350E-02	0.000E+00	0.000E+00	0.000E+00	0.000E+00	1.020E+03	0.000E+00	9.190E-04
ZR-95	2.450E-01	7.740E-02	0.000E+00	1.140E-01	0.000E+00	1.790E+02	0.000E+00	5.320E-02
ZR-97	5.330E-03	1.050E-03	0.000E+00	1.600E-03	0.000E+00	2.850E+02	0.000E+00	4.860E-04
NB-95	4.410E+02	2.450E+02	0.000E+00	2.370E+02	0.000E+00	1.050E+06	0.000E+00	1.350E+02
MO-99	0.000E+00	8.550E+01	0.000E+00	1.960E+02	0.000E+00	1.530E+02	0.000E+00	1.630E+01
TC-99M	5.720E-04	1.600E-03	0.000E+00	2.380E-02	8.860E-04	1.050E+00	0.000E+00	2.070E-02
TC-101	2.820E-33	4.010E-33	0.000E+00	7.240E-32	2.440E-33	6.840E-40	0.000E+00	3.930E-32
RU-103	4.570E+00	0.000E+00	0.000E+00	1.610E+01	0.000E+00	3.820E+02	0.000E+00	1.950E+00
RU-105	9.350E-03	0.000E+00	0.000E+00	1.180E-01	0.000E+00	7.550E+00	0.000E+00	3.630E-03
RU-106	7.140E+01	0.000E+00	0.000E+00	1.380E+02	0.000E+00	3.420E+03	0.000E+00	8.990E+00
AG-110M	8.580E-01	8.120E-01	0.000E+00	1.550E+00	0.000E+00	2.280E+02	0.000E+00	4.940E-01
TE-125M	2.760E+03	9.950E+02	7.710E+02	0.000E+00	0.000E+00	8.150E+03	0.000E+00	3.690E+02
TE-127	1.960E+01	6.950E+00	1.350E+01	7.940E+01	0.000E+00	1.510E+03	0.000E+00	4.220E+00
TE-127M	7.010E+03	2.490E+03	1.670E+03	2.840E+04	0.000E+00	1.750E+04	0.000E+00	8.340E+02
TE-129	1.770E-05	6.600E-06	1.260E-05	7.430E-05	0.000E+00	9.680E-05	0.000E+00	4.310E-06
TE-129M	1.160E+04	4.320E+03	3.760E+03	4.870E+04	0.000E+00	4.370E+04	0.000E+00	1.840E+03
TE-131	9.400E-17	3.870E-17	7.240E-17	4.110E-16	0.000E+00	7.710E-18	0.000E+00	2.940E-17
TE-131M	1.020E+03	4.900E+02	7.370E+02	5.110E+03	0.000E+00	3.930E+04	0.000E+00	4.090E+02
TE-132	2.060E+03	1.300E+03	1.370E+03	1.250E+04	0.000E+00	4.130E+04	0.000E+00	1.230E+03
I-130	7.320E+00	2.120E+01	1.730E+03	3.260E+01	0.000E+00	1.630E+01	0.000E+00	8.460E+00

APPENDIX D

A_i Teen Dose Factors for use in the Liquid Dose Calculations

Agegroup:	TEEN	Pathway:	Fresh Water Fish - Sport (FFSP)			Units:	mrem/hr / mCi/ml	
Nuclide	**Bone**	**Liver**	**Thyroid**	**Kidney**	**Lung**	**Gilli**	**Skin**	**Total Body**
I-131	1.470E+02	2.060E+02	6.000E+04	3.540E+02	0.000E+00	4.070E+01	0.000E+00	1.100E+02
I-132	5.520E-03	1.440E-02	4.870E-01	2.280E-02	0.000E+00	6.290E-03	0.000E+00	5.180E-03
I-133	2.470E+01	4.190E+01	5.850E+03	7.350E+01	0.000E+00	3.170E+01	0.000E+00	1.280E+01
I-134	2.220E-08	5.890E-08	9.810E-07	9.280E-08	0.000E+00	7.760E-10	0.000E+00	2.110E-08
I-135	1.350E+00	3.480E+00	2.240E+02	5.490E+00	0.000E+00	3.850E+00	0.000E+00	1.290E+00
CS-134	3.050E+05	7.180E+05	0.000E+00	2.280E+05	8.710E+04	8.930E+03	0.000E+00	3.330E+05
CS-136	2.970E+04	1.170E+05	0.000E+00	6.370E+04	1.000E+04	9.410E+03	0.000E+00	7.860E+04
CS-137	4.090E+05	5.440E+05	0.000E+00	1.850E+05	7.190E+04	7.730E+03	0.000E+00	1.890E+05
CS-138	9.580E-12	1.840E-11	0.000E+00	1.360E-11	1.580E-12	8.340E-15	0.000E+00	9.190E-12
BA-139	6.170E-06	4.340E-09	0.000E+00	4.090E-09	2.990E-09	5.510E-05	0.000E+00	1.800E-07
BA-140	1.960E+02	2.410E-01	0.000E+00	8.160E-02	1.620E-01	3.030E+02	0.000E+00	1.260E+01
BA-141	9.450E-25	7.050E-28	0.000E+00	6.550E-28	4.830E-28	2.010E-30	0.000E+00	3.150E-26
BA-142	2.750E-42	2.750E-45	0.000E+00	2.320E-45	1.830E-45	8.430E-54	0.000E+00	1.690E-43
LA-140	1.050E-01	5.160E-02	0.000E+00	0.000E+00	0.000E+00	2.960E+03	0.000E+00	1.370E-02
LA-142	2.350E-07	1.040E-07	0.000E+00	0.000E+00	0.000E+00	3.180E-03	0.000E+00	2.600E-08
CE-141	2.370E-02	1.590E-02	0.000E+00	7.460E-03	0.000E+00	4.540E+01	0.000E+00	1.820E-03
CE-143	2.590E-03	1.880E+00	0.000E+00	8.450E-04	0.000E+00	5.660E+01	0.000E+00	2.100E-04
CE-144	1.270E+00	5.240E-01	0.000E+00	3.130E-01	0.000E+00	3.180E+02	0.000E+00	6.810E-02
PR-143	5.680E-01	2.270E-01	0.000E+00	1.320E-01	0.000E+00	1.870E+03	0.000E+00	2.830E-02
PR-144	1.690E-28	6.900E-29	0.000E+00	3.960E-29	0.000E+00	1.860E-31	0.000E+00	8.550E-30
ND-147	4.020E-01	4.370E-01	0.000E+00	2.560E-01	0.000E+00	1.580E+03	0.000E+00	2.620E-02
W-187	1.590E+02	1.300E+02	0.000E+00	0.000E+00	0.000E+00	3.510E+04	0.000E+00	4.540E+01
NP-239	2.390E-02	2.260E-03	0.000E+00	7.080E-03	0.000E+00	3.630E+02	0.000E+00	1.250E-03

APPENDIX D

A_i Teen Dose Factors for use in the Liquid Dose Calculations

Agegroup:	TEEN	Pathway:	Shoreline Sediment (SHDp)			Units:	mrem/hr / mCi/ml	
Nuclide	**Bone**	**Liver**	**Thyroid**	**Kidney**	**Lung**	**Gilli**	**Skin**	**Total Body**
H-3	0.000E+00	0.000E+00	0.000E+00	0.000E+00	0.000E+00	0.000E+00	0.000E+00	0.000E+00
C-14	0.000E+00	0.000E+00	0.000E+00	0.000E+00	0.000E+00	0.000E+00	0.000E+00	0.000E+00
NA-24	3.580E+00	3.580E+00	3.580E+00	3.580E+00	3.580E+00	3.580E+00	4.150E+00	3.580E+00
P-32	0.000E+00	0.000E+00	0.000E+00	0.000E+00	0.000E+00	0.000E+00	0.000E+00	0.000E+00
CR-51	1.400E+00	1.400E+00	1.400E+00	1.400E+00	1.400E+00	1.400E+00	1.650E+00	1.400E+00
MN-54	4.150E+02	4.150E+02	4.150E+02	4.150E+02	4.150E+02	4.150E+02	4.870E+02	4.150E+02
MN-56	2.700E-01	2.700E-01	2.700E-01	2.700E-01	2.700E-01	2.700E-01	3.200E-01	2.700E-01
FE-55	0.000E+00	0.000E+00	0.000E+00	0.000E+00	0.000E+00	0.000E+00	0.000E+00	0.000E+00
FE-59	8.180E+01	8.180E+01	8.180E+01	8.180E+01	8.180E+01	8.180E+01	9.610E+01	8.180E+01
CO-58	1.140E+02	1.140E+02	1.140E+02	1.140E+02	1.140E+02	1.140E+02	1.330E+02	1.140E+02
CO-60	6.440E+03	6.440E+03	6.440E+03	6.440E+03	6.440E+03	6.440E+03	7.580E+03	6.440E+03
NI-63	0.000E+00	0.000E+00	0.000E+00	0.000E+00	0.000E+00	0.000E+00	0.000E+00	0.000E+00
NI-65	8.900E-02	8.900E-02	8.900E-02	8.900E-02	8.900E-02	8.900E-02	1.030E-01	8.900E-02
CU-64	1.820E-01	1.820E-01	1.820E-01	1.820E-01	1.820E-01	1.820E-01	2.060E-01	1.820E-01
ZN-65	2.240E+02	2.240E+02	2.240E+02	2.240E+02	2.240E+02	2.240E+02	2.580E+02	2.240E+02
ZN-69	0.000E+00	0.000E+00	0.000E+00	0.000E+00	0.000E+00	0.000E+00	0.000E+00	0.000E+00
BR-83	1.460E-03	1.460E-03	1.460E-03	1.460E-03	1.460E-03	1.460E-03	2.120E-03	1.460E-03
BR-84	6.070E-02	6.070E-02	6.070E-02	6.070E-02	6.070E-02	6.070E-02	7.080E-02	6.070E-02
BR-85	0.000E+00	0.000E+00	0.000E+00	0.000E+00	0.000E+00	0.000E+00	0.000E+00	0.000E+00
RB-86	2.690E+00	2.690E+00	2.690E+00	2.690E+00	2.690E+00	2.690E+00	3.080E+00	2.690E+00
RB-88	9.910E-03	9.910E-03	9.910E-03	9.910E-03	9.910E-03	9.910E-03	1.130E-02	9.910E-03
RB-89	3.680E-02	3.680E-02	3.680E-02	3.680E-02	3.680E-02	3.680E-02	4.420E-02	3.680E-02
SR-89	6.490E-03	6.490E-03	6.490E-03	6.490E-03	6.490E-03	6.490E-03	7.530E-03	6.490E-03
SR-90	0.000E+00	0.000E+00	0.000E+00	0.000E+00	0.000E+00	0.000E+00	0.000E+00	0.000E+00
SR-91	6.440E-01	6.440E-01	6.440E-01	6.440E-01	6.440E-01	6.440E-01	7.530E-01	6.440E-01

APPENDIX D

A_i Teen Dose Factors for use in the Liquid Dose Calculations

Agegroup:	TEEN	Pathway:	Shoreline Sediment (SHDp)			Units:	mrem/hr / mCi/ml	
Nuclide	**Bone**	**Liver**	**Thyroid**	**Kidney**	**Lung**	**Gilli**	**Skin**	**Total Body**
SR-92	2.330E-01	2.330E-01	2.330E-01	2.330E-01	2.330E-01	2.330E-01	2.590E-01	2.330E-01
Y-90	1.350E-03	1.350E-03	1.350E-03	1.350E-03	1.350E-03	1.350E-03	1.590E-03	1.350E-03
Y-91	3.220E-01	3.220E-01	3.220E-01	3.220E-01	3.220E-01	3.220E-01	3.620E-01	3.220E-01
Y-91M	3.010E-02	3.010E-02	3.010E-02	3.010E-02	3.010E-02	3.010E-02	3.480E-02	3.010E-02
Y-92	5.410E-02	5.410E-02	5.410E-02	5.410E-02	5.410E-02	5.410E-02	6.420E-02	5.410E-02
Y-93	5.500E-02	5.500E-02	5.500E-02	5.500E-02	5.500E-02	5.500E-02	7.520E-02	5.500E-02
ZR-95	7.330E+01	7.330E+01	7.330E+01	7.330E+01	7.330E+01	7.330E+01	8.510E+01	7.330E+01
ZR-97	8.870E-01	8.870E-01	8.870E-01	8.870E-01	8.870E-01	8.870E-01	1.030E+00	8.870E-01
NB-95	4.100E+01	4.100E+01	4.100E+01	4.100E+01	4.100E+01	4.100E+01	4.820E+01	4.100E+01
MO-99	1.200E+00	1.200E+00	1.200E+00	1.200E+00	1.200E+00	1.200E+00	1.390E+00	1.200E+00
TC-99M	5.520E-02	5.520E-02	5.520E-02	5.520E-02	5.520E-02	5.520E-02	6.320E-02	5.520E-02
TC-101	6.100E-03	6.100E-03	6.100E-03	6.100E-03	6.100E-03	6.100E-03	6.780E-03	6.100E-03
RU-103	3.250E+01	3.250E+01	3.250E+01	3.250E+01	3.250E+01	3.250E+01	3.790E+01	3.250E+01
RU-105	1.910E-01	1.910E-01	1.910E-01	1.910E-01	1.910E-01	1.910E-01	2.160E-01	1.910E-01
RU-106	1.270E+02	1.270E+02	1.270E+02	1.270E+02	1.270E+02	1.270E+02	1.520E+02	1.270E+02
AG-110M	1.030E+03	1.030E+03	1.030E+03	1.030E+03	1.030E+03	1.030E+03	1.200E+03	1.030E+03
TE-125M	4.650E-01	4.650E-01	4.650E-01	4.650E-01	4.650E-01	4.650E-01	6.380E-01	4.650E-01
TE-127	8.920E-04	8.920E-04	8.920E-04	8.920E-04	8.920E-04	8.920E-04	9.820E-04	8.920E-04
TE-127M	2.750E-02	2.750E-02	2.750E-02	2.750E-02	2.750E-02	2.750E-02	3.250E-02	2.750E-02
TE-129	7.860E-03	7.860E-03	7.860E-03	7.860E-03	7.860E-03	7.860E-03	9.300E-03	7.860E-03
TE-129M	5.930E+00	5.930E+00	5.930E+00	5.930E+00	5.930E+00	5.930E+00	6.930E+00	5.930E+00
TE-131	8.750E-03	8.750E-03	8.750E-03	8.750E-03	8.750E-03	8.750E-03	1.030E+01	8.750E-03
TE-131M	2.410E+00	2.410E+00	2.410E+00	2.410E+00	2.410E+00	2.410E+00	2.840E+00	2.410E+00
TE-132	1.270E+00	1.270E+00	1.270E+00	1.270E+00	1.270E+00	1.270E+00	1.490E+00	1.270E+00
I-130	1.650E+00	1.650E+00	1.650E+00	1.650E+00	1.650E+00	1.650E+00	2.010E+00	1.650E+00

APPENDIX D

A_i Teen Dose Factors for use in the Liquid Dose Calculations

Agegroup:	TEEN	Pathway:	Shoreline Sediment (SHDp)			Units:	mrem/hr / mCi/ml	
Nuclide	**Bone**	**Liver**	**Thyroid**	**Kidney**	**Lung**	**Gilli**	**Skin**	**Total Body**
I-131	5.160E+00	5.160E+00	5.160E+00	5.160E+00	5.160E+00	5.160E+00	6.260E+00	5.160E+00
I-132	3.730E-01	3.730E-01	3.730E-01	3.730E-01	3.730E-01	3.730E-01	4.390E-01	3.730E-01
I-133	7.350E-01	7.350E-01	7.350E-01	7.350E-01	7.350E-01	7.350E-01	8.930E-01	7.350E-01
I-134	1.340E-01	1.340E-01	1.340E-01	1.340E-01	1.340E-01	1.340E-01	1.590E-01	1.340E-01
I-135	7.570E-01	7.570E-01	7.570E-01	7.570E-01	7.570E-01	7.570E-01	8.830E-01	7.570E-01
CS-134	2.060E+03	2.060E+03	2.060E+03	2.060E+03	2.060E+03	2.060E+03	2.400E+03	2.060E+03
CS-136	4.520E+01	4.520E+01	4.520E+01	4.520E+01	4.520E+01	4.520E+01	5.130E+01	4.520E+01
CS-137	3.080E+03	3.080E+03	3.080E+03	3.080E+03	3.080E+03	3.080E+03	3.590E+03	3.080E+03
CS-138	1.080E-01	1.080E-01	1.080E-01	1.080E-01	1.080E-01	1.080E-01	1.230E-01	1.080E-01
BA-139	3.170E-02	3.170E-02	3.170E-02	3.170E-02	3.170E-02	3.170E-02	3.570E-02	3.170E-02
BA-140	6.150E+00	6.150E+00	6.150E+00	6.150E+00	6.150E+00	6.150E+00	7.030E+00	6.150E+00
BA-141	1.250E-02	1.250E-02	1.250E-02	1.250E-02	1.250E-02	1.250E-02	1.420E-02	1.250E-02
BA-142	1.340E-02	1.340E-02	1.340E-02	1.340E-02	1.340E-02	1.340E-02	1.530E-02	1.340E-02
LA-140	5.760E+00	5.760E+00	5.760E+00	5.760E+00	5.760E+00	5.760E+00	6.530E+00	5.760E+00
LA-142	2.280E-01	2.280E-01	2.280E-01	2.280E-01	2.280E-01	2.280E-01	2.730E-01	2.280E-01
CE-141	4.090E+00	4.090E+00	4.090E+00	4.090E+00	4.090E+00	4.090E+00	4.620E+00	4.090E+00
CE-143	6.930E-01	6.930E-01	6.930E-01	6.930E-01	6.930E-01	6.930E-01	7.870E-01	6.930E-01
CE-144	2.080E+01	2.080E+01	2.080E+01	2.080E+01	2.080E+01	2.080E+01	2.410E+01	2.080E+01
PR-143	0.000E+00	0.000E+00	0.000E+00	0.000E+00	0.000E+00	0.000E+00	0.000E+00	0.000E+00
PR-144	5.500E-04	5.500E-04	5.500E-04	5.500E-04	5.500E-04	5.500E-04	6.320E-04	5.500E-04
ND-147	2.520E+00	2.520E+00	2.520E+00	2.520E+00	2.520E+00	2.520E+00	3.020E+00	2.520E+00
W-187	7.050E-01	7.050E-01	7.050E-01	7.050E-01	7.050E-01	7.050E-01	8.190E-01	7.050E-01
NP-239	5.130E-01	5.130E-01	5.130E-01	5.130E-01	5.130E-01	5.130E-01	5.930E-01	5.130E-01

APPENDIX E

A_i Child Dose Factors for use in the Liquid Dose Calculations

Agegroup:	CHILD	Pathway:	Potable Water (PWtr)			Units:	mrem/hr / mCi/ml	
Nuclide	**Bone**	**Liver**	**Thyroid**	**Kidney**	**Lung**	**Gilli**	**Skin**	**Total Body**
H-3	0.000E+00	1.180E+01	1.180E+01	1.180E+01	1.180E+01	1.180E+01	0.000E+00	1.180E+01
C-14	7.030E+02	1.410E+02	1.410E+02	1.410E+02	1.410E+02	1.410E+02	0.000E+00	1.410E+02
NA-24	1.940E+02	1.940E+02	1.940E+02	1.940E+02	1.940E+02	1.940E+02	0.000E+00	1.940E+02
P-32	4.680E+04	2.190E+03	0.000E+00	0.000E+00	0.000E+00	1.290E+03	0.000E+00	1.800E+03
CR-51	0.000E+00	0.000E+00	2.840E-01	7.750E-02	5.180E-01	2.710E+01	0.000E+00	5.110E-01
MN-54	0.000E+00	6.210E+02	0.000E+00	1.740E+02	0.000E+00	5.220E+02	0.000E+00	1.660E+02
MN-56	0.000E+00	7.700E-01	0.000E+00	9.320E-01	0.000E+00	1.120E+02	0.000E+00	1.740E-01
FE-55	6.680E+02	3.550E+02	0.000E+00	0.000E+00	2.010E+02	6.570E+01	0.000E+00	1.100E+02
FE-59	9.520E+02	1.540E+03	0.000E+00	0.000E+00	4.470E+02	1.600E+03	0.000E+00	7.670E+02
CO-58	0.000E+00	1.040E+02	0.000E+00	0.000E+00	0.000E+00	6.070E+02	0.000E+00	3.190E+02
CO-60	0.000E+00	3.080E+02	0.000E+00	0.000E+00	0.000E+00	1.700E+03	0.000E+00	9.070E+02
NI-63	3.130E+04	1.670E+03	0.000E+00	0.000E+00	0.000E+00	1.130E+02	0.000E+00	1.060E+03
NI-65	4.760E+00	4.480E-01	0.000E+00	0.000E+00	0.000E+00	5.490E+01	0.000E+00	2.610E-01
CU-64	0.000E+00	7.390E+00	0.000E+00	1.780E+01	0.000E+00	3.470E+02	0.000E+00	4.460E+00
ZN-65	7.950E+02	2.120E+03	0.000E+00	1.340E+03	0.000E+00	3.720E+02	0.000E+00	1.320E+03
ZN-69	3.190E-04	4.610E-04	0.000E+00	2.800E-04	0.000E+00	2.900E-02	0.000E+00	4.260E-05
BR-83	0.000E+00	0.000E+00	0.000E+00	0.000E+00	0.000E+00	0.000E+00	0.000E+00	3.060E-01
BR-84	0.000E+00	0.000E+00	0.000E+00	0.000E+00	0.000E+00	0.000E+00	0.000E+00	1.780E-06
BR-85	0.000E+00	0.000E+00	0.000E+00	0.000E+00	0.000E+00	0.000E+00	0.000E+00	1.300E-76
RB-86	0.000E+00	3.820E+03	0.000E+00	0.000E+00	0.000E+00	2.460E+02	0.000E+00	2.350E+03
RB-88	0.000E+00	7.360E-12	0.000E+00	0.000E+00	0.000E+00	3.610E-13	0.000E+00	5.110E-12
RB-89	0.000E+00	6.300E-14	0.000E+00	0.000E+00	0.000E+00	5.490E-16	0.000E+00	5.600E-14
SR-89	7.620E+04	0.000E+00	0.000E+00	0.000E+00	0.000E+00	2.950E+03	0.000E+00	2.180E+03
SR-90	9.880E+05	0.000E+00	0.000E+00	0.000E+00	0.000E+00	1.330E+04	0.000E+00	2.510E+05
SR-91	5.810E+02	0.000E+00	0.000E+00	0.000E+00	0.000E+00	1.280E+03	0.000E+00	2.190E+01

APPENDIX E

A_i Child Dose Factors for use in the Liquid Dose Calculations

Agegroup:	CHILD	Pathway:	Potable Water (PWtr)			Units:	mrem/hr / mCi/ml	
Nuclide	**Bone**	**Liver**	**Thyroid**	**Kidney**	**Lung**	**Gilli**	**Skin**	**Total Body**
SR-92	2.430E+01	0.000E+00	0.000E+00	0.000E+00	0.000E+00	4.610E+02	0.000E+00	9.760E-01
Y-90	2.100E+00	0.000E+00	0.000E+00	0.000E+00	0.000E+00	5.980E+03	0.000E+00	5.620E-02
Y-91	3.480E+01	0.000E+00	0.000E+00	0.000E+00	0.000E+00	4.640E+03	0.000E+00	9.310E-01
Y-91M	9.860E-07	0.000E+00	0.000E+00	0.000E+00	0.000E+00	1.930E-03	0.000E+00	3.590E-08
Y-92	2.000E-02	0.000E+00	0.000E+00	0.000E+00	0.000E+00	5.770E+02	0.000E+00	5.710E-04
Y-93	2.900E-01	0.000E+00	0.000E+00	0.000E+00	0.000E+00	4.330E+03	0.000E+00	7.970E-03
ZR-95	6.710E+00	1.470E+00	0.000E+00	2.110E+00	0.000E+00	1.540E+03	0.000E+00	1.310E+00
ZR-97	2.480E-01	3.590E-02	0.000E+00	5.150E-02	0.000E+00	5.440E+03	0.000E+00	2.120E-02
NB-95	1.300E+00	5.040E-01	0.000E+00	4.740E-01	0.000E+00	9.330E+02	0.000E+00	3.600E-01
MO-99	0.000E+00	6.820E+02	0.000E+00	1.460E+03	0.000E+00	5.640E+02	0.000E+00	1.690E+02
TC-99M	1.350E-02	2.640E-02	0.000E+00	3.840E-01	1.340E-02	1.500E+01	0.000E+00	4.380E-01
TC-101	3.330E-17	3.480E-17	0.000E+00	5.940E-16	1.840E-17	1.110E-16	0.000E+00	4.410E-16
RU-103	4.210E+01	0.000E+00	0.000E+00	1.060E+02	0.000E+00	1.090E+03	0.000E+00	1.620E+01
RU-105	5.750E-01	0.000E+00	0.000E+00	5.060E+00	0.000E+00	3.750E+02	0.000E+00	2.090E-01
RU-106	6.800E+02	0.000E+00	0.000E+00	9.180E+02	0.000E+00	1.060E+04	0.000E+00	8.480E+01
AG-110M	3.130E+01	2.110E+01	0.000E+00	3.940E+01	0.000E+00	2.510E+03	0.000E+00	1.690E+01
TE-125M	6.590E+02	1.790E+02	1.850E+02	0.000E+00	0.000E+00	6.360E+02	0.000E+00	8.780E+01
TE-127	1.130E+01	3.050E+00	7.820E+00	3.210E+01	0.000E+00	4.410E+02	0.000E+00	2.420E+00
TE-127M	1.670E+03	4.510E+02	4.000E+02	4.780E+03	0.000E+00	1.360E+03	0.000E+00	1.990E+02
TE-129	5.730E-03	1.600E-03	4.090E-03	1.680E-02	0.000E+00	3.570E-01	0.000E+00	1.360E-03
TE-129M	2.800E+03	7.830E+02	9.030E+02	8.230E+03	0.000E+00	3.420E+03	0.000E+00	4.350E+02
TE-131	1.040E-08	3.160E-09	7.930E-09	3.140E-08	0.000E+00	5.450E-08	0.000E+00	3.090E-09
TE-131M	3.170E+02	1.100E+02	2.260E+02	1.060E+03	0.000E+00	4.450E+03	0.000E+00	1.170E+02
TE-132	5.280E+02	2.340E+02	3.400E+02	2.170E+03	0.000E+00	2.350E+03	0.000E+00	2.820E+02
I-130	8.650E+01	1.750E+02	1.930E+04	2.610E+02	0.000E+00	8.180E+01	0.000E+00	9.010E+01

APPENDIX E

A_i Child Dose Factors for use in the Liquid Dose Calculations

Agegroup:	CHILD	Pathway:	Potable Water (PWtr)			Units:	mrem/hr / mCi/ml	
Nuclide	**Bone**	**Liver**	**Thyroid**	**Kidney**	**Lung**	**Gilli**	**Skin**	**Total Body**
I-131	9.580E+02	9.630E+02	3.190E+05	1.580E+03	0.000E+00	8.580E+01	0.000E+00	5.470E+02
I-132	1.250E+00	2.300E+00	1.070E+02	3.520E+00	0.000E+00	2.710E+00	0.000E+00	1.060E+00
I-133	2.310E+02	2.850E+02	5.300E+04	4.750E+02	0.000E+00	1.150E+02	0.000E+00	1.080E+02
I-134	1.820E-03	3.370E-03	7.760E-02	5.160E-03	0.000E+00	2.240E-03	0.000E+00	1.550E-03
I-135	2.890E+01	5.210E+01	4.610E+03	7.990E+01	0.000E+00	3.970E+01	0.000E+00	2.460E+01
CS-134	1.360E+04	2.230E+04	0.000E+00	6.920E+03	2.480E+03	1.200E+02	0.000E+00	4.710E+03
CS-136	1.330E+03	3.660E+03	0.000E+00	1.950E+03	2.910E+02	1.290E+02	0.000E+00	2.370E+03
CS-137	1.900E+04	1.820E+04	0.000E+00	5.930E+03	2.130E+03	1.140E+02	0.000E+00	2.690E+03
CS-138	2.440E-06	3.390E-06	0.000E+00	2.380E-06	2.570E-07	1.560E-06	0.000E+00	2.150E-06
BA-139	5.940E-02	3.170E-05	0.000E+00	2.770E-05	1.860E-05	3.430E+00	0.000E+00	1.720E-03
BA-140	4.700E+03	4.120E+00	0.000E+00	1.340E+00	2.460E+00	2.380E+03	0.000E+00	2.740E+02
BA-141	1.620E-11	9.050E-15	0.000E+00	7.830E-15	5.310E-14	9.210E-12	0.000E+00	5.260E-13
BA-142	1.800E-20	1.300E-23	0.000E+00	1.050E-23	7.630E-24	2.350E-22	0.000E+00	1.010E-21
LA-140	4.780E-01	1.670E-01	0.000E+00	0.000E+00	0.000E+00	4.650E+03	0.000E+00	5.630E-02
LA-142	1.640E-04	5.210E-05	0.000E+00	0.000E+00	0.000E+00	1.030E+01	0.000E+00	1.630E-05
CE-141	2.280E+00	1.140E+00	0.000E+00	4.990E-01	0.000E+00	1.420E+03	0.000E+00	1.690E-01
CE-143	3.160E-01	1.710E+02	0.000E+00	7.180E-02	0.000E+00	2.510E+03	0.000E+00	2.480E-02
CE-144	1.210E+02	3.790E+01	0.000E+00	2.100E+01	0.000E+00	9.870E+03	0.000E+00	6.450E+00
PR-143	2.230E+00	6.690E-01	0.000E+00	3.620E-01	0.000E+00	2.400E+03	0.000E+00	1.110E-01
PR-144	2.200E-15	6.800E-16	0.000E+00	3.600E-16	0.000E+00	1.460E-12	0.000E+00	1.110E-16
ND-147	1.570E+00	1.270E+00	0.000E+00	6.990E-01	0.000E+00	2.020E+03	0.000E+00	9.860E-02
W-187	1.760E+01	1.040E+01	0.000E+00	0.000E+00	0.000E+00	1.460E+03	0.000E+00	4.680E+00
NP-239	2.630E-01	1.890E-02	0.000E+00	5.470E-02	0.000E+00	1.400E+03	0.000E+00	1.330E-02

APPENDIX E

A_i Child Dose Factors for use in the Liquid Dose Calculations

Agegroup:	CHILD	Pathway:	Fresh Water Fish - Sport (FFSP)			Units:	mrem/hr / mCi/ml	
Nuclide	**Bone**	**Liver**	**Thyroid**	**Kidney**	**Lung**	**Gilli**	**Skin**	**Total Body**
H-3	0.000E+00	1.440E-01	1.440E-01	1.440E-01	1.440E-01	1.440E-01	0.000E+00	1.440E-01
C-14	4.380E+04	8.760E+03	8.760E+03	8.760E+03	8.760E+03	8.760E+03	0.000E+00	8.760E+03
NA-24	1.510E+02	1.510E+02	1.510E+02	1.510E+02	1.510E+02	1.510E+02	0.000E+00	1.510E+02
P-32	1.850E+06	8.680E+04	0.000E+00	0.000E+00	0.000E+00	5.130E+04	0.000E+00	7.150E+04
CR-51	0.000E+00	0.000E+00	7.580E-01	2.070E-01	1.380E+00	7.240E+01	0.000E+00	1.370E+00
MN-54	0.000E+00	3.360E+03	0.000E+00	9.420E+02	0.000E+00	2.820E+03	0.000E+00	8.950E+02
MN-56	0.000E+00	1.650E-01	0.000E+00	2.000E-01	0.000E+00	2.400E+01	0.000E+00	3.730E-02
FE-55	9.040E+02	4.790E+02	0.000E+00	0.000E+00	2.710E+02	8.880E+01	0.000E+00	1.490E+02
FE-59	1.280E+03	2.070E+03	0.000E+00	0.000E+00	5.990E+02	2.150E+03	0.000E+00	1.030E+03
CO-58	0.000E+00	7.010E+01	0.000E+00	0.000E+00	0.000E+00	4.090E+02	0.000E+00	2.150E+02
CO-60	0.000E+00	2.080E+02	0.000E+00	0.000E+00	0.000E+00	1.150E+03	0.000E+00	6.130E+02
NI-63	4.230E+04	2.270E+03	0.000E+00	0.000E+00	0.000E+00	1.530E+02	0.000E+00	1.440E+03
NI-65	2.370E-01	2.230E-02	0.000E+00	0.000E+00	0.000E+00	2.740E+00	0.000E+00	1.300E-02
CU-64	0.000E+00	2.590E+00	0.000E+00	6.260E+00	0.000E+00	1.220E+02	0.000E+00	1.570E+00
ZN-65	2.150E+04	5.730E+04	0.000E+00	3.610E+04	0.000E+00	1.010E+04	0.000E+00	3.560E+04
ZN-69	1.080E-06	1.560E-06	0.000E+00	9.470E-07	0.000E+00	9.840E-05	0.000E+00	1.440E-07
BR-83	0.000E+00	0.000E+00	0.000E+00	0.000E+00	0.000E+00	0.000E+00	0.000E+00	5.340E-02
BR-84	0.000E+00	0.000E+00	0.000E+00	0.000E+00	0.000E+00	0.000E+00	0.000E+00	1.570E-12
BR-85	0.000E+00	0.000E+00	0.000E+00	0.000E+00	0.000E+00	0.000E+00	0.000E+00	0.000E+00
RB-86	0.000E+00	1.020E+05	0.000E+00	0.000E+00	0.000E+00	6.530E+03	0.000E+00	6.250E+04
RB-88	0.000E+00	1.330E-22	0.000E+00	0.000E+00	0.000E+00	6.510E-24	0.000E+00	9.220E-23
RB-89	0.000E+00	1.580E-26	0.000E+00	0.000E+00	0.000E+00	1.370E-28	0.000E+00	1.400E-26
SR-89	3.070E+04	0.000E+00	0.000E+00	0.000E+00	0.000E+00	1.190E+03	0.000E+00	8.780E+02
SR-90	4.010E+05	0.000E+00	0.000E+00	0.000E+00	0.000E+00	5.400E+03	0.000E+00	1.020E+05
SR-91	9.800E+01	0.000E+00	0.000E+00	0.000E+00	0.000E+00	2.160E+02	0.000E+00	3.700E+00

APPENDIX E

A_i Child Dose Factors for use in the Liquid Dose Calculations

Agegroup:	CHILD	Pathway:	Fresh Water Fish - Sport (FFSP)			Units:	mrem/hr / mCi/ml	
Nuclide	**Bone**	**Liver**	**Thyroid**	**Kidney**	**Lung**	**Gilli**	**Skin**	**Total Body**
SR-92	4.580E-01	0.000E+00	0.000E+00	0.000E+00	0.000E+00	8.670E+00	0.000E+00	1.840E-02
Y-90	6.240E-01	0.000E+00	0.000E+00	0.000E+00	0.000E+00	1.780E+03	0.000E+00	1.670E-02
Y-91	1.170E+01	0.000E+00	0.000E+00	0.000E+00	0.000E+00	1.560E+03	0.000E+00	3.130E-01
Y-91M	1.480E-11	0.000E+00	0.000E+00	0.000E+00	0.000E+00	2.900E-08	0.000E+00	5.390E-13
Y-92	6.440E-04	0.000E+00	0.000E+00	0.000E+00	0.000E+00	1.860E+01	0.000E+00	1.840E-05
Y-93	4.300E-02	0.000E+00	0.000E+00	0.000E+00	0.000E+00	6.420E+02	0.000E+00	1.180E-03
ZR-95	2.980E-01	6.550E-02	0.000E+00	9.370E-02	0.000E+00	6.830E+01	0.000E+00	5.830E-02
ZR-97	6.780E-03	9.790E-04	0.000E+00	1.410E-03	0.000E+00	1.480E+02	0.000E+00	5.780E-04
NB-95	5.210E+02	2.030E+02	0.000E+00	1.900E+02	0.000E+00	3.750E+05	0.000E+00	1.450E+02
MO-99	0.000E+00	8.130E+01	0.000E+00	1.740E+02	0.000E+00	6.720E+01	0.000E+00	2.010E+01
TC-99M	6.860E-04	1.350E-03	0.000E+00	1.950E-02	6.830E-04	7.650E-01	0.000E+00	2.230E-02
TC-101	3.610E-33	3.780E-33	0.000E+00	6.440E-32	2.000E-33	1.200E-32	0.000E+00	4.790E-32
RU-103	5.650E+00	0.000E+00	0.000E+00	1.420E+01	0.000E+00	1.460E+02	0.000E+00	2.170E+00
RU-105	1.190E-02	0.000E+00	0.000E+00	1.050E-01	0.000E+00	7.790E+00	0.000E+00	4.330E-03
RU-106	9.190E+01	0.000E+00	0.000E+00	1.240E+02	0.000E+00	1.430E+03	0.000E+00	1.150E+01
AG-110M	9.720E-01	6.570E-01	0.000E+00	1.220E+00	0.000E+00	7.810E+01	0.000E+00	5.250E-01
TE-125M	3.540E+03	9.610E+02	9.950E+02	0.000E+00	0.000E+00	3.420E+03	0.000E+00	4.730E+02
TE-127	2.520E+01	6.800E+00	1.750E+01	7.170E+01	0.000E+00	9.850E+02	0.000E+00	5.410E+00
TE-127M	9.040E+03	2.430E+03	2.160E+03	2.580E+04	0.000E+00	7.320E+03	0.000E+00	1.070E+03
TE-129	2.280E-05	6.370E-06	1.630E-05	6.680E-05	0.000E+00	1.420E-03	0.000E+00	5.420E-06
TE-129M	1.500E+04	4.190E+03	4.840E+03	4.410E+04	0.000E+00	1.830E+04	0.000E+00	2.330E+03
TE-131	1.210E-16	3.680E-17	9.220E-17	3.650E-16	0.000E+00	6.330E-16	0.000E+00	3.590E-17
TE-131M	1.300E+03	4.500E+02	9.250E+02	4.350E+03	0.000E+00	1.820E+04	0.000E+00	4.790E+02
TE-132	2.570E+03	1.140E+03	1.650E+03	1.050E+04	0.000E+00	1.140E+04	0.000E+00	1.370E+03
I-130	8.950E+00	1.810E+01	1.990E+03	2.700E+01	0.000E+00	8.460E+00	0.000E+00	9.320E+00

APPENDIX E

A_i Child Dose Factors for use in the Liquid Dose Calculations

Agegroup:	CHILD	Pathway:	Fresh Water Fish - Sport (FFSP)			Units:	mrem/hr / mCi/ml	
Nuclide	**Bone**	**Liver**	**Thyroid**	**Kidney**	**Lung**	**Gilli**	**Skin**	**Total Body**
I-131	1.860E+02	1.870E+02	6.190E+04	3.070E+02	0.000E+00	1.670E+01	0.000E+00	1.060E+02
I-132	6.830E-03	1.250E-02	5.820E-01	1.920E-02	0.000E+00	1.480E-02	0.000E+00	5.770E-03
I-133	3.140E+01	3.880E+01	7.210E+03	6.470E+01	0.000E+00	1.560E+01	0.000E+00	1.470E+01
I-134	2.750E-08	5.100E-08	1.170E-06	7.800E-08	0.000E+00	3.380E-08	0.000E+00	2.350E-08
I-135	1.670E+00	3.010E+00	2.660E+02	4.610E+00	0.000E+00	2.290E+00	0.000E+00	1.420E+00
CS-134	3.680E+05	6.040E+05	0.000E+00	1.870E+05	6.710E+04	3.250E+03	0.000E+00	1.270E+05
CS-136	3.510E+04	9.640E+04	0.000E+00	5.130E+04	7.660E+03	3.390E+03	0.000E+00	6.240E+04
CS-137	5.140E+05	4.920E+05	0.000E+00	1.600E+05	5.770E+04	3.080E+03	0.000E+00	7.270E+04
CS-138	1.210E-11	1.690E-11	0.000E+00	1.190E-11	1.280E-12	7.770E-12	0.000E+00	1.070E-11
BA-139	7.930E-06	4.230E-09	0.000E+00	3.700E-09	2.490E-09	4.580E-04	0.000E+00	2.300E-07
BA-140	2.480E+02	2.170E-01	0.000E+00	7.060E-02	1.290E-01	1.250E+02	0.000E+00	1.450E+01
BA-141	1.210E-24	6.800E-28	0.000E+00	5.880E-28	3.990E-27	6.920E-25	0.000E+00	3.950E-26
BA-142	3.460E-42	2.490E-45	0.000E+00	2.020E-45	1.470E-45	4.510E-44	0.000E+00	1.930E-43
LA-140	1.310E-01	4.590E-02	0.000E+00	0.000E+00	0.000E+00	1.280E+03	0.000E+00	1.550E-02
LA-142	2.970E-07	9.470E-08	0.000E+00	0.000E+00	0.000E+00	1.880E-02	0.000E+00	2.960E-08
CE-141	3.060E-02	1.520E-02	0.000E+00	6.680E-03	0.000E+00	1.900E+01	0.000E+00	2.260E-03
CE-143	3.320E-03	1.800E+00	0.000E+00	7.550E-04	0.000E+00	2.640E+01	0.000E+00	2.610E-04
CE-144	1.630E+00	5.120E-01	0.000E+00	2.830E-01	0.000E+00	1.330E+02	0.000E+00	8.710E-02
PR-143	7.340E-01	2.200E-01	0.000E+00	1.190E-01	0.000E+00	7.920E+02	0.000E+00	3.640E-02
PR-144	2.180E-28	6.750E-29	0.000E+00	3.570E-29	0.000E+00	1.450E-25	0.000E+00	1.100E-29
ND-147	5.150E-01	4.170E-01	0.000E+00	2.290E-01	0.000E+00	6.610E+02	0.000E+00	3.230E-02
W-187	2.010E+02	1.190E+02	0.000E+00	0.000E+00	0.000E+00	1.680E+04	0.000E+00	5.350E+01
NP-239	3.080E-02	2.210E-03	0.000E+00	6.390E-03	0.000E+00	1.630E+02	0.000E+00	1.550E-03

APPENDIX E

A_i Child Dose Factors for use in the Liquid Dose Calculations

Agegroup:	CHILD	Pathway:	Shoreline Sediment (SHDp)			Units:	mrem/hr / mCi/ml	
Nuclide	**Bone**	**Liver**	**Thyroid**	**Kidney**	**Lung**	**Gilli**	**Skin**	**Total Body**
H-3	0.000E+00	0.000E+00	0.000E+00	0.000E+00	0.000E+00	0.000E+00	0.000E+00	0.000E+00
C-14	0.000E+00	0.000E+00	0.000E+00	0.000E+00	0.000E+00	0.000E+00	0.000E+00	0.000E+00
NA-24	7.480E-01	7.480E-01	7.480E-01	7.480E-01	7.480E-01	7.480E-01	8.680E-01	7.480E-01
P-32	0.000E+00	0.000E+00	0.000E+00	0.000E+00	0.000E+00	0.000E+00	0.000E+00	0.000E+00
CR-51	2.920E-01	2.920E-01	2.920E-01	2.920E-01	2.920E-01	2.920E-01	3.450E-01	2.920E-01
MN-54	8.680E+01	8.680E+01	8.680E+01	8.680E+01	8.680E+01	8.680E+01	1.020E+02	8.680E+01
MN-56	5.650E-02	5.650E-02	5.650E-02	5.650E-02	5.650E-02	5.650E-02	6.680E-02	5.650E-02
FE-55	0.000E+00	0.000E+00	0.000E+00	0.000E+00	0.000E+00	0.000E+00	0.000E+00	0.000E+00
FE-59	1.710E+01	1.710E+01	1.710E+01	1.710E+01	1.710E+01	1.710E+01	2.010E+01	1.710E+01
CO-58	2.370E+01	2.370E+01	2.370E+01	2.370E+01	2.370E+01	2.370E+01	2.780E+01	2.370E+01
CO-60	1.350E+03	1.350E+03	1.350E+03	1.350E+03	1.350E+03	1.350E+03	1.580E+03	1.350E+03
NI-63	0.000E+00	0.000E+00	0.000E+00	0.000E+00	0.000E+00	0.000E+00	0.000E+00	0.000E+00
NI-65	1.860E-02	1.860E-02	1.860E-02	1.860E-02	1.860E-02	1.860E-02	2.160E-02	1.860E-02
CU-64	3.800E-02	3.800E-02	3.800E-02	3.800E-02	3.800E-02	3.800E-02	4.310E-02	3.800E-02
ZN-65	4.680E+01	4.680E+01	4.680E+01	4.680E+01	4.680E+01	4.680E+01	5.380E+01	4.680E+01
ZN-69	0.000E+00	0.000E+00	0.000E+00	0.000E+00	0.000E+00	0.000E+00	0.000E+00	0.000E+00
BR-83	3.050E-04	3.050E-04	3.050E-04	3.050E-04	3.050E-04	3.050E-04	4.430E-04	3.050E-04
BR-84	1.270E-02	1.270E-02	1.270E-02	1.270E-02	1.270E-02	1.270E-02	1.480E-02	1.270E-02
BR-85	0.000E+00	0.000E+00	0.000E+00	0.000E+00	0.000E+00	0.000E+00	0.000E+00	0.000E+00
RB-86	5.630E-01	5.630E-01	5.630E-01	5.630E-01	5.630E-01	5.630E-01	6.430E-01	5.630E-01
RB-88	2.070E-03	2.070E-03	2.070E-03	2.070E-03	2.070E-03	2.070E-03	2.370E-03	2.070E-03
RB-89	7.700E-03	7.700E-03	7.700E-03	7.700E-03	7.700E-03	7.700E-03	9.240E-03	7.700E-03
SR-89	1.360E-03	1.360E-03	1.360E-03	1.360E-03	1.360E-03	1.360E-03	1.570E-03	1.360E-03
SR-90	0.000E+00	0.000E+00	0.000E+00	0.000E+00	0.000E+00	0.000E+00	0.000E+00	0.000E+00
SR-91	1.350E-01	1.350E-01	1.350E-01	1.350E-01	1.350E-01	1.350E-01	1.570E-01	1.350E-01

APPENDIX E

A_i Child Dose Factors for use in the Liquid Dose Calculations

Agegroup:	CHILD	Pathway:	Shoreline Sediment (SHDp)			Units:	mrem/hr / mCi/ml	
Nuclide	**Bone**	**Liver**	**Thyroid**	**Kidney**	**Lung**	**Gilli**	**Skin**	**Total Body**
SR-92	4.860E-02	4.860E-02	4.860E-02	4.860E-02	4.860E-02	4.860E-02	5.410E-02	4.860E-02
Y-90	2.810E-04	2.810E-04	2.810E-04	2.810E-04	2.810E-04	2.810E-04	3.320E-04	2.810E-04
Y-91	6.720E-02	6.720E-02	6.720E-02	6.720E-02	6.720E-02	6.720E-02	7.560E-02	6.720E-02
Y-91M	6.280E-03	6.280E-03	6.280E-03	6.280E-03	6.280E-03	6.280E-03	7.270E-03	6.280E-03
Y-92	1.130E-02	1.130E-02	1.130E-02	1.130E-02	1.130E-02	1.130E-02	1.340E-02	1.130E-02
Y-93	1.150E-02	1.150E-02	1.150E-02	1.150E-02	1.150E-02	1.150E-02	1.570E-02	1.150E-02
ZR-95	1.530E+01	1.530E+01	1.530E+01	1.530E+01	1.530E+01	1.530E+01	1.780E+01	1.530E+01
ZR-97	1.850E-01	1.850E-01	1.850E-01	1.850E-01	1.850E-01	1.850E-01	2.160E-01	1.850E-01
NB-95	8.560E+00	8.560E+00	8.560E+00	8.560E+00	8.560E+00	8.560E+00	1.010E+01	8.560E+00
MO-99	2.500E-01	2.500E-01	2.500E-01	2.500E-01	2.500E-01	2.500E-01	2.900E-01	2.500E-01
TC-99M	1.150E-02	1.150E-02	1.150E-02	1.150E-02	1.150E-02	1.150E-02	1.320E-02	1.150E-02
TC-101	1.270E-03	1.270E-03	1.270E-03	1.270E-03	1.270E-03	1.270E-03	1.420E-03	1.270E-03
RU-103	6.780E+00	6.780E+00	6.780E+00	6.780E+00	6.780E+00	6.780E+00	7.910E+00	6.780E+00
RU-105	3.990E-02	3.990E-02	3.990E-02	3.990E-02	3.990E-02	3.990E-02	4.520E-02	3.990E-02
RU-106	2.640E+01	2.640E+01	2.640E+01	2.640E+01	2.640E+01	2.640E+01	3.170E+01	2.640E+01
AG-110M	2.150E+02	2.150E+02	2.150E+02	2.150E+02	2.150E+02	2.150E+02	2.510E+02	2.150E+02
TE-125M	9.720E-02	9.720E-02	9.720E-02	9.720E-02	9.720E-02	9.720E-02	1.330E-01	9.720E-02
TE-127	1.860E-04	1.860E-04	1.860E-04	1.860E-04	1.860E-04	1.860E-04	2.050E-04	1.860E-04
TE-127M	5.740E-03	5.740E-03	5.740E-03	5.740E-03	5.740E-03	5.740E-03	6.780E-03	5.740E-03
TE-129	1.640E-03	1.640E-03	1.640E-03	1.640E-03	1.640E-03	1.640E-03	1.940E-03	1.640E-03
TE-129M	1.240E+00	1.240E+00	1.240E+00	1.240E+00	1.240E+00	1.240E+00	1.450E+00	1.240E+00
TE-131	1.830E-03	1.830E-03	1.830E-03	1.830E-03	1.830E-03	1.830E-03	2.160E+00	1.830E-03
TE-131M	5.030E-01	5.030E-01	5.030E-01	5.030E-01	5.030E-01	5.030E-01	5.920E-01	5.030E-01
TE-132	2.650E-01	2.650E-01	2.650E-01	2.650E-01	2.650E-01	2.650E-01	3.120E-01	2.650E-01
I-130	3.450E-01	3.450E-01	3.450E-01	3.450E-01	3.450E-01	3.450E-01	4.190E-01	3.450E-01

APPENDIX E

A_i Child Dose Factors for use in the Liquid Dose Calculations

Agegroup:	CHILD	Pathway:	Shoreline Sediment (SHDp)			Units:	mrem/hr / mCi/ml	
Nuclide	**Bone**	**Liver**	**Thyroid**	**Kidney**	**Lung**	**Gilli**	**Skin**	**Total Body**
I-131	1.080E+00	1.080E+00	1.080E+00	1.080E+00	1.080E+00	1.080E+00	1.310E+00	1.080E+00
I-132	7.800E-02	7.800E-02	7.800E-02	7.800E-02	7.800E-02	7.800E-02	9.180E-02	7.800E-02
I-133	1.540E-01	1.540E-01	1.540E-01	1.540E-01	1.540E-01	1.540E-01	1.870E-01	1.540E-01
I-134	2.800E-02	2.800E-02	2.800E-02	2.800E-02	2.800E-02	2.800E-02	3.320E-02	2.800E-02
I-135	1.580E-01	1.580E-01	1.580E-01	1.580E-01	1.580E-01	1.580E-01	1.850E-01	1.580E-01
CS-134	4.300E+02	4.300E+02	4.300E+02	4.300E+02	4.300E+02	4.300E+02	5.010E+02	4.300E+02
CS-136	9.450E+00	9.450E+00	9.450E+00	9.450E+00	9.450E+00	9.450E+00	1.070E+01	9.450E+00
CS-137	6.440E+02	6.440E+02	6.440E+02	6.440E+02	6.440E+02	6.440E+02	7.510E+02	6.440E+02
CS-138	2.250E-02	2.250E-02	2.250E-02	2.250E-02	2.250E-02	2.250E-02	2.570E-02	2.250E-02
BA-139	6.630E-03	6.630E-03	6.630E-03	6.630E-03	6.630E-03	6.630E-03	7.460E-03	6.630E-03
BA-140	1.290E+00	1.290E+00	1.290E+00	1.290E+00	1.290E+00	1.290E+00	1.470E+00	1.290E+00
BA-141	2.610E-03	2.610E-03	2.610E-03	2.610E-03	2.610E-03	2.610E-03	2.980E-03	2.610E-03
BA-142	2.810E-03	2.810E-03	2.810E-03	2.810E-03	2.810E-03	2.810E-03	3.200E-03	2.810E-03
LA-140	1.200E+00	1.200E+00	1.200E+00	1.200E+00	1.200E+00	1.200E+00	1.360E+00	1.200E+00
LA-142	4.760E-02	4.760E-02	4.760E-02	4.760E-02	4.760E-02	4.760E-02	5.710E-02	4.760E-02
CE-141	8.560E-01	8.560E-01	8.560E-01	8.560E-01	8.560E-01	8.560E-01	9.650E-01	8.560E-01
CE-143	1.450E-01	1.450E-01	1.450E-01	1.450E-01	1.450E-01	1.450E-01	1.650E-01	1.450E-01
CE-144	4.350E+00	4.350E+00	4.350E+00	4.350E+00	4.350E+00	4.350E+00	5.040E+00	4.350E+00
PR-143	0.000E+00	0.000E+00	0.000E+00	0.000E+00	0.000E+00	0.000E+00	0.000E+00	0.000E+00
PR-144	1.150E-04	1.150E-04	1.150E-04	1.150E-04	1.150E-04	1.150E-04	1.320E-04	1.150E-04
ND-147	5.260E-01	5.260E-01	5.260E-01	5.260E-01	5.260E-01	5.260E-01	6.310E-01	5.260E-01
W-187	1.470E-01	1.470E-01	1.470E-01	1.470E-01	1.470E-01	1.470E-01	1.710E-01	1.470E-01
NP-239	1.070E-01	1.070E-01	1.070E-01	1.070E-01	1.070E-01	1.070E-01	1.240E-01	1.070E-01

APPENDIX F

A_i Infant Dose Factors for use in the Liquid Dose Calculations

Agegroup:	INFANT	Pathway:	Potable Water (PWtr)			Units:	mrem/hr / mCi/ml	
Nuclide	**Bone**	**Liver**	**Thyroid**	**Kidney**	**Lung**	**Gilli**	**Skin**	**Total Body**
H-3	0.000E+00	1.160E+01	1.160E+01	1.160E+01	1.160E+01	1.160E+01	0.000E+00	1.160E+01
C-14	8.920E+02	1.900E+02	1.900E+02	1.900E+02	1.900E+02	1.900E+02	0.000E+00	1.900E+02
NA-24	2.190E+02	2.190E+02	2.190E+02	2.190E+02	2.190E+02	2.190E+02	0.000E+00	2.190E+02
P-32	6.240E+04	3.670E+03	0.000E+00	0.000E+00	0.000E+00	8.450E+02	0.000E+00	2.420E+03
CR-51	0.000E+00	0.000E+00	3.420E-01	7.470E-02	6.650E-01	1.530E+01	0.000E+00	5.240E-01
MN-54	0.000E+00	7.480E+02	0.000E+00	1.660E+02	0.000E+00	2.750E+02	0.000E+00	1.690E+02
MN-56	0.000E+00	1.220E+00	0.000E+00	1.050E+00	0.000E+00	1.110E+02	0.000E+00	2.100E-01
FE-55	5.230E+02	3.380E+02	0.000E+00	0.000E+00	1.650E+02	4.290E+01	0.000E+00	9.030E+01
FE-59	1.150E+03	2.010E+03	0.000E+00	0.000E+00	5.940E+02	9.590E+02	0.000E+00	7.910E+02
CO-58	0.000E+00	1.350E+02	0.000E+00	0.000E+00	0.000E+00	3.360E+02	0.000E+00	3.360E+02
CO-60	0.000E+00	4.060E+02	0.000E+00	0.000E+00	0.000E+00	9.670E+02	0.000E+00	9.590E+02
NI-63	2.390E+04	1.470E+03	0.000E+00	0.000E+00	0.000E+00	7.340E+01	0.000E+00	8.280E+02
NI-65	6.520E+00	7.380E-01	0.000E+00	0.000E+00	0.000E+00	5.620E+01	0.000E+00	3.360E-01
CU-64	0.000E+00	1.190E+01	0.000E+00	2.010E+01	0.000E+00	2.440E+02	0.000E+00	5.500E+00
ZN-65	6.910E+02	2.370E+03	0.000E+00	1.150E+03	0.000E+00	2.000E+03	0.000E+00	1.090E+03
ZN-69	4.390E-04	7.910E-04	0.000E+00	3.290E-04	0.000E+00	6.450E-02	0.000E+00	5.890E-05
BR-83	0.000E+00	0.000E+00	0.000E+00	0.000E+00	0.000E+00	0.000E+00	0.000E+00	4.200E-01
BR-84	0.000E+00	0.000E+00	0.000E+00	0.000E+00	0.000E+00	0.000E+00	0.000E+00	2.220E-06
BR-85	0.000E+00	0.000E+00	0.000E+00	0.000E+00	0.000E+00	0.000E+00	0.000E+00	1.800E-76
RB-86	0.000E+00	6.280E+03	0.000E+00	0.000E+00	0.000E+00	1.610E+02	0.000E+00	3.100E+03
RB-88	0.000E+00	1.250E-11	0.000E+00	0.000E+00	0.000E+00	1.220E-11	0.000E+00	6.840E-12
RB-89	0.000E+00	9.960E-14	0.000E+00	0.000E+00	0.000E+00	3.390E-14	0.000E+00	6.860E-14
SR-89	9.380E+04	0.000E+00	0.000E+00	0.000E+00	0.000E+00	1.930E+03	0.000E+00	2.690E+03
SR-90	6.960E+05	0.000E+00	0.000E+00	0.000E+00	0.000E+00	8.690E+03	0.000E+00	1.770E+05
SR-91	7.830E+02	0.000E+00	0.000E+00	0.000E+00	0.000E+00	9.270E+02	0.000E+00	2.830E+01

APPENDIX F

A_i Infant Dose Factors for use in the Liquid Dose Calculations

Agegroup:	INFANT	Pathway:	Potable Water (PWtr)			Units:	mrem/hr / mCi/ml	
Nuclide	**Bone**	**Liver**	**Thyroid**	**Kidney**	**Lung**	**Gilli**	**Skin**	**Total Body**
SR-92	3.350E+01	0.000E+00	0.000E+00	0.000E+00	0.000E+00	3.610E+02	0.000E+00	1.240E+00
Y-90	2.870E+00	0.000E+00	0.000E+00	0.000E+00	0.000E+00	3.970E+03	0.000E+00	7.700E-02
Y-91	4.230E+01	0.000E+00	0.000E+00	0.000E+00	0.000E+00	3.030E+03	0.000E+00	1.130E+00
Y-91M	1.350E-06	0.000E+00	0.000E+00	0.000E+00	0.000E+00	4.510E-03	0.000E+00	4.610E-08
Y-92	2.740E-02	0.000E+00	0.000E+00	0.000E+00	0.000E+00	5.240E+02	0.000E+00	7.710E-04
Y-93	4.010E-01	0.000E+00	0.000E+00	0.000E+00	0.000E+00	3.170E+03	0.000E+00	1.090E-02
ZR-95	7.710E+00	1.880E+00	0.000E+00	2.020E+00	0.000E+00	9.350E+02	0.000E+00	1.330E+00
ZR-97	3.400E-01	5.840E-02	0.000E+00	5.890E-02	0.000E+00	3.720E+03	0.000E+00	2.670E-02
NB-95	1.560E+00	6.440E-01	0.000E+00	4.620E-01	0.000E+00	5.440E+02	0.000E+00	3.720E-01
MO-99	0.000E+00	1.130E+03	0.000E+00	1.680E+03	0.000E+00	3.710E+02	0.000E+00	2.200E+02
TC-99M	1.810E-02	3.740E-02	0.000E+00	4.020E-01	1.950E-02	1.090E+01	0.000E+00	4.820E-01
TC-101	4.570E-17	5.750E-17	0.000E+00	6.840E-16	3.140E-17	9.780E-15	0.000E+00	5.690E-16
RU-103	5.520E+01	0.000E+00	0.000E+00	1.150E+02	0.000E+00	6.710E+02	0.000E+00	1.850E+01
RU-105	7.850E-01	0.000E+00	0.000E+00	5.770E+00	0.000E+00	3.120E+02	0.000E+00	2.640E-01
RU-106	9.060E+02	0.000E+00	0.000E+00	1.070E+03	0.000E+00	6.880E+03	0.000E+00	1.130E+02
AG-110M	3.740E+01	2.730E+01	0.000E+00	3.910E+01	0.000E+00	1.420E+03	0.000E+00	1.810E+01
TE-125M	8.710E+02	2.910E+02	2.930E+02	0.000E+00	0.000E+00	4.150E+02	0.000E+00	1.180E+02
TE-127	1.550E+01	5.200E+00	1.260E+01	3.790E+01	0.000E+00	3.260E+02	0.000E+00	3.340E+00
TE-127M	2.190E+03	7.280E+02	6.340E+02	5.400E+03	0.000E+00	8.850E+02	0.000E+00	2.660E+02
TE-129	7.860E-03	2.710E-03	6.590E-03	1.960E-02	0.000E+00	6.280E-01	0.000E+00	1.840E-03
TE-129M	3.720E+03	1.280E+03	1.430E+03	9.310E+03	0.000E+00	2.220E+03	0.000E+00	5.730E+02
TE-131	1.420E-08	5.250E-09	1.270E-08	3.640E-08	0.000E+00	5.750E-07	0.000E+00	3.990E-09
TE-131M	4.330E+02	1.740E+02	3.540E+02	1.200E+03	0.000E+00	2.940E+03	0.000E+00	1.440E+02
TE-132	7.030E+02	3.480E+02	5.140E+02	2.180E+03	0.000E+00	1.290E+03	0.000E+00	3.250E+02
I-130	1.150E+02	2.530E+02	2.840E+04	2.780E+02	0.000E+00	5.430E+01	0.000E+00	1.020E+02

APPENDIX F

A_i Infant Dose Factors for use in the Liquid Dose Calculations

Agegroup:	INFANT	Pathway:	Potable Water (PWtr)			Units:	mrem/hr / mCi/ml	
Nuclide	**Bone**	**Liver**	**Thyroid**	**Kidney**	**Lung**	**Gilli**	**Skin**	**Total Body**
I-131	1.290E+03	1.520E+03	5.010E+05	1.780E+03	0.000E+00	5.440E+01	0.000E+00	6.700E+02
I-132	1.680E+00	3.410E+00	1.600E+02	3.800E+00	0.000E+00	2.760E+00	0.000E+00	1.210E+00
I-133	3.150E+02	4.590E+02	8.350E+04	5.400E+02	0.000E+00	7.770E+01	0.000E+00	1.340E+02
I-134	2.440E-03	4.990E-03	1.160E-01	5.580E-03	0.000E+00	5.160E-03	0.000E+00	1.780E-03
I-135	3.900E+01	7.750E+01	6.950E+03	8.640E+01	0.000E+00	2.800E+01	0.000E+00	2.830E+01
CS-134	1.420E+04	2.640E+04	0.000E+00	6.810E+03	2.790E+03	7.180E+01	0.000E+00	2.670E+03
CS-136	1.680E+03	4.950E+03	0.000E+00	1.970E+03	4.030E+02	7.510E+01	0.000E+00	1.850E+03
CS-137	1.960E+04	2.300E+04	0.000E+00	6.170E+03	2.500E+03	7.190E+01	0.000E+00	1.630E+03
CS-138	3.330E-06	5.410E-06	0.000E+00	2.700E-06	4.210E-07	8.650E-06	0.000E+00	2.620E-06
BA-139	8.180E-02	5.420E-05	0.000E+00	3.260E-05	3.290E-05	5.180E+00	0.000E+00	2.370E-03
BA-140	6.260E+03	6.260E+00	0.000E+00	1.490E+00	3.840E+00	1.540E+03	0.000E+00	3.230E+02
BA-141	2.220E-11	1.520E-14	0.000E+00	9.140E-15	9.250E-15	2.710E-10	0.000E+00	7.000E-13
BA-142	2.460E-20	2.040E-23	0.000E+00	1.180E-23	1.240E-23	1.010E-19	0.000E+00	1.210E-21
LA-140	6.460E-01	2.550E-01	0.000E+00	0.000E+00	0.000E+00	2.990E+03	0.000E+00	6.550E-02
LA-142	2.220E-04	8.160E-05	0.000E+00	0.000E+00	0.000E+00	1.390E+01	0.000E+00	1.950E-05
CE-141	2.930E+00	1.790E+00	0.000E+00	5.510E-01	0.000E+00	9.230E+02	0.000E+00	2.100E-01
CE-143	4.330E-01	2.870E+02	0.000E+00	8.360E-02	0.000E+00	1.670E+03	0.000E+00	3.270E-02
CE-144	1.120E+02	4.580E+01	0.000E+00	1.850E+01	0.000E+00	6.430E+03	0.000E+00	6.270E+00
PR-143	2.980E+00	1.110E+00	0.000E+00	4.140E-01	0.000E+00	1.570E+03	0.000E+00	1.480E-01
PR-144	3.020E-15	1.170E-15	0.000E+00	4.240E-16	0.000E+00	5.440E-11	0.000E+00	1.520E-16
ND-147	2.020E+00	2.070E+00	0.000E+00	7.980E-01	0.000E+00	1.310E+03	0.000E+00	1.270E-01
W-187	2.400E+01	1.670E+01	0.000E+00	0.000E+00	0.000E+00	9.790E+02	0.000E+00	5.760E+00
NP-239	3.600E-01	3.220E-02	0.000E+00	6.430E-02	0.000E+00	9.320E+02	0.000E+00	1.820E-02

APPENDIX G

R_i Adult Dose Factors for use in the Gaseous Dose Calculations

Agegroup:	ADULT	Pathway:	Grs/Cow/Milk (CMILK)			Units:	m^2·mrem/yr / mCi/sec; mrem/yr / mCi/m^3 (H-3)	
Nuclide	**Bone**	**Liver**	**Thyroid**	**Kidney**	**Lung**	**Gilli**	**Skin**	**Total Body**
H-3	0.000E+00	7.630E+02	7.630E+02	7.630E+02	7.630E+02	7.630E+02	0.000E+00	7.630E+02
C-14	2.630E+08	5.270E+07	5.270E+07	5.270E+07	5.270E+07	5.270E+07	0.000E+00	5.270E+07
NA-24	2.440E+06	2.440E+06	2.440E+06	2.440E+06	2.440E+06	2.440E+06	0.000E+00	2.440E+06
P-32	1.710E+10	1.060E+09	0.000E+00	0.000E+00	0.000E+00	1.920E+09	0.000E+00	6.610E+08
CR-51	0.000E+00	0.000E+00	1.710E+04	6.300E+03	3.790E+04	7.190E+06	0.000E+00	2.860E+04
MN-54	0.000E+00	8.410E+06	0.000E+00	2.500E+06	0.000E+00	2.580E+07	0.000E+00	1.610E+06
MN-56	0.000E+00	4.090E-03	0.000E+00	5.190E-03	0.000E+00	1.310E-01	0.000E+00	7.260E-04
FE-55	2.510E+07	1.740E+07	0.000E+00	0.000E+00	9.680E+06	9.950E+06	0.000E+00	4.050E+06
FE-59	2.970E+07	6.980E+07	0.000E+00	0.000E+00	1.950E+07	2.330E+08	0.000E+00	2.680E+07
CO-58	0.000E+00	4.710E+06	0.000E+00	0.000E+00	0.000E+00	9.550E+07	0.000E+00	1.060E+07
CO-60	0.000E+00	1.640E+07	0.000E+00	0.000E+00	0.000E+00	3.080E+08	0.000E+00	3.620E+07
NI-63	6.730E+09	4.660E+08	0.000E+00	0.000E+00	0.000E+00	9.730E+07	0.000E+00	2.260E+08
NI-65	3.700E-01	4.810E-02	0.000E+00	0.000E+00	0.000E+00	1.220E+00	0.000E+00	2.190E-02
CU-64	0.000E+00	2.380E+04	0.000E+00	6.010E+04	0.000E+00	2.030E+06	0.000E+00	1.120E+04
ZN-65	1.370E+09	4.370E+09	0.000E+00	2.920E+09	0.000E+00	2.750E+09	0.000E+00	1.970E+09
ZN-69	2.090E-12	4.000E-12	0.000E+00	2.600E-12	0.000E+00	6.010E-13	0.000E+00	2.780E-13
BR-83	0.000E+00	0.000E+00	0.000E+00	0.000E+00	0.000E+00	1.400E-01	0.000E+00	9.720E-02
BR-84	0.000E+00	0.000E+00	0.000E+00	0.000E+00	0.000E+00	1.260E-28	0.000E+00	1.610E-23
BR-85	0.000E+00	0.000E+00	0.000E+00	0.000E+00	0.000E+00	0.000E+00	0.000E+00	0.000E+00
RB-86	0.000E+00	2.590E+09	0.000E+00	0.000E+00	0.000E+00	5.120E+08	0.000E+00	1.210E+09
RB-88	0.000E+00	2.140E-45	0.000E+00	0.000E+00	0.000E+00	2.960E-56	0.000E+00	1.140E-45
RB-89	0.000E+00	4.330E-53	0.000E+00	0.000E+00	0.000E+00	2.510E-66	0.000E+00	3.040E-53
SR-89	1.450E+09	0.000E+00	0.000E+00	0.000E+00	0.000E+00	2.330E+08	0.000E+00	4.160E+07
SR-90	4.680E+10	0.000E+00	0.000E+00	0.000E+00	0.000E+00	1.350E+09	0.000E+00	1.150E+10
SR-91	2.890E+04	0.000E+00	0.000E+00	0.000E+00	0.000E+00	1.380E+05	0.000E+00	1.170E+03

APPENDIX G

R_i Adult Dose Factors for use in the Gaseous Dose Calculations

Agegroup:	ADULT	Pathway:	Grs/Cow/Milk (CMILK)			Units:	m^2·mrem/yr / mCi/sec; mrem/yr / mCi/m^3 (H-3)	
Nuclide	**Bone**	**Liver**	**Thyroid**	**Kidney**	**Lung**	**Gilli**	**Skin**	**Total Body**
SR-92	4.880E-01	0.000E+00	0.000E+00	0.000E+00	0.000E+00	9.680E+00	0.000E+00	2.110E-02
Y-90	7.080E+01	0.000E+00	0.000E+00	0.000E+00	0.000E+00	7.510E+05	0.000E+00	1.900E+00
Y-91	8.590E+03	0.000E+00	0.000E+00	0.000E+00	0.000E+00	4.730E+06	0.000E+00	2.300E+02
Y-91M	5.980E-20	0.000E+00	0.000E+00	0.000E+00	0.000E+00	1.760E-19	0.000E+00	2.320E-21
Y-92	5.580E-05	0.000E+00	0.000E+00	0.000E+00	0.000E+00	9.770E-01	0.000E+00	1.630E-06
Y-93	2.230E-01	0.000E+00	0.000E+00	0.000E+00	0.000E+00	7.090E+03	0.000E+00	6.170E-03
ZR-95	9.430E+02	3.030E+02	0.000E+00	4.750E+02	0.000E+00	9.590E+05	0.000E+00	2.050E+02
ZR-97	4.330E-01	8.740E-02	0.000E+00	1.320E-01	0.000E+00	2.710E+04	0.000E+00	4.000E-02
NB-95	8.260E+04	4.590E+04	0.000E+00	4.540E+04	0.000E+00	2.790E+08	0.000E+00	2.470E+04
MO-99	0.000E+00	2.480E+07	0.000E+00	5.610E+07	0.000E+00	5.740E+07	0.000E+00	4.710E+06
TC-99M	3.320E+00	9.380E+00	0.000E+00	1.420E+02	4.600E+00	5.550E+03	0.000E+00	1.200E+02
TC-101	2.590E-60	3.740E-60	0.000E+00	6.730E-59	1.910E-60	1.120E-71	0.000E+00	3.670E-59
RU-103	1.020E+03	0.000E+00	0.000E+00	3.890E+03	0.000E+00	1.190E+05	0.000E+00	4.390E+02
RU-105	8.570E-04	0.000E+00	0.000E+00	1.110E-02	0.000E+00	5.240E-01	0.000E+00	3.380E-04
RU-106	2.040E+04	0.000E+00	0.000E+00	3.940E+04	0.000E+00	1.320E+06	0.000E+00	2.580E+03
AG-110M	5.820E+07	5.390E+07	0.000E+00	1.060E+08	0.000E+00	2.200E+10	0.000E+00	3.200E+07
TE-125M	1.630E+07	5.900E+06	4.900E+06	6.630E+07	0.000E+00	6.500E+07	0.000E+00	2.180E+06
TE-127	6.530E+02	2.340E+02	4.840E+02	2.660E+03	0.000E+00	5.150E+04	0.000E+00	1.410E+02
TE-127M	4.580E+07	1.640E+07	1.170E+07	1.860E+08	0.000E+00	1.540E+08	0.000E+00	5.580E+06
TE-129	2.830E-10	1.060E-10	2.170E-10	1.190E-09	0.000E+00	2.130E-10	0.000E+00	6.880E-11
TE-129M	6.020E+07	2.250E+07	2.070E+07	2.510E+08	0.000E+00	3.030E+08	0.000E+00	9.530E+06
TE-131	3.600E-33	1.500E-33	2.960E-33	1.580E-32	0.000E+00	5.100E-34	0.000E+00	1.140E-33
TE-131M	3.610E+05	1.770E+05	2.800E+05	1.790E+06	0.000E+00	1.750E+07	0.000E+00	1.470E+05
TE-132	2.400E+06	1.550E+06	1.720E+06	1.500E+07	0.000E+00	7.350E+07	0.000E+00	1.460E+06
I-130	4.200E+05	1.240E+06	1.050E+08	1.930E+06	0.000E+00	1.070E+06	0.000E+00	4.890E+05

APPENDIX G

R_i Adult Dose Factors for use in the Gaseous Dose Calculations

Agegroup:	ADULT	Pathway:	Grs/Cow/Milk (CMILK)			Units:	m^2·mrem/yr / mCi/sec; mrem/yr / mCi/m^3 (H-3)	
Nuclide	**Bone**	**Liver**	**Thyroid**	**Kidney**	**Lung**	**Gilli**	**Skin**	**Total Body**
I-131	2.960E+08	4.230E+08	1.390E+11	7.260E+08	0.000E+00	1.120E+08	0.000E+00	2.430E+08
I-132	1.640E-01	4.390E-01	1.540E+01	7.000E-01	0.000E+00	8.250E-02	0.000E+00	1.540E-01
I-133	3.870E+06	6.730E+06	9.890E+08	1.170E+07	0.000E+00	6.050E+06	0.000E+00	2.050E+06
I-134	2.020E-12	5.480E-12	9.490E-11	8.710E-12	0.000E+00	4.770E-15	0.000E+00	1.960E-12
I-135	1.280E+04	3.360E+04	2.220E+06	5.390E+04	0.000E+00	3.800E+04	0.000E+00	1.240E+04
CS-134	5.650E+09	1.350E+10	0.000E+00	4.350E+09	1.450E+09	2.350E+08	0.000E+00	1.100E+10
CS-136	2.630E+08	1.040E+09	0.000E+00	5.780E+08	7.930E+07	1.180E+08	0.000E+00	7.480E+08
CS-137	7.380E+09	1.010E+10	0.000E+00	3.430E+09	1.140E+09	1.950E+08	0.000E+00	6.610E+09
CS-138	9.050E-24	1.790E-23	0.000E+00	1.310E-23	1.300E-24	7.620E-29	0.000E+00	8.850E-24
BA-139	4.420E-08	3.150E-11	0.000E+00	2.940E-11	1.790E-11	7.830E-08	0.000E+00	1.290E-09
BA-140	2.690E+07	3.380E+04	0.000E+00	1.150E+04	1.930E+04	5.530E+07	0.000E+00	1.760E+06
BA-141	4.090E-46	3.090E-49	0.000E+00	2.880E-49	1.760E-49	1.930E-55	0.000E+00	1.380E-47
BA-142	2.640E-80	2.720E-83	0.000E+00	2.300E-83	1.540E-83	3.720E-98	0.000E+00	1.660E-81
LA-140	4.510E+00	2.270E+00	0.000E+00	0.000E+00	0.000E+00	1.670E+05	0.000E+00	6.010E-01
LA-142	1.860E-11	8.460E-12	0.000E+00	0.000E+00	0.000E+00	6.170E-08	0.000E+00	2.110E-12
CE-141	4.840E+03	3.280E+03	0.000E+00	1.520E+03	0.000E+00	1.250E+07	0.000E+00	3.720E+02
CE-143	4.160E+01	3.070E+04	0.000E+00	1.350E+01	0.000E+00	1.150E+06	0.000E+00	3.400E+00
CE-144	3.580E+05	1.500E+05	0.000E+00	8.870E+04	0.000E+00	1.210E+08	0.000E+00	1.920E+04
PR-143	1.580E+02	6.330E+01	0.000E+00	3.660E+01	0.000E+00	6.920E+05	0.000E+00	7.830E+00
PR-144	5.870E-54	2.440E-54	0.000E+00	1.380E-54	0.000E+00	8.450E-61	0.000E+00	2.990E-55
ND-147	9.420E+01	1.090E+02	0.000E+00	6.360E+01	0.000E+00	5.220E+05	0.000E+00	6.510E+00
W-187	6.510E+03	5.450E+03	0.000E+00	0.000E+00	0.000E+00	1.780E+06	0.000E+00	1.900E+03
NP-239	3.670E+00	3.610E-01	0.000E+00	1.130E+00	0.000E+00	7.410E+04	0.000E+00	1.990E-01

APPENDIX G

R_i Adult Dose Factors for use in the Gaseous Dose Calculations

Agegroup:	ADULT	Pathway:	Grs/Goat/Milk (GMILK)			Units:	m^2·mrem/yr / mCi/sec; mrem/yr / mCi/m^3 (H-3)	
Nuclide	**Bone**	**Liver**	**Thyroid**	**Kidney**	**Lung**	**Gilli**	**Skin**	**Total Body**
H-3	0.000E+00	1.560E+03	1.560E+03	1.560E+03	1.560E+03	1.560E+03	0.000E+00	1.560E+03
C-14	2.630E+08	5.270E+07	5.270E+07	5.270E+07	5.270E+07	5.270E+07	0.000E+00	5.270E+07
NA-24	2.930E+05	2.930E+05	2.930E+05	2.930E+05	2.930E+05	2.930E+05	0.000E+00	2.930E+05
P-32	2.050E+10	1.280E+09	0.000E+00	0.000E+00	0.000E+00	2.310E+09	0.000E+00	7.930E+08
CR-51	0.000E+00	0.000E+00	2.050E+03	7.550E+02	4.550E+03	8.620E+05	0.000E+00	3.430E+03
MN-54	0.000E+00	1.010E+06	0.000E+00	3.000E+05	0.000E+00	3.090E+06	0.000E+00	1.930E+05
MN-56	0.000E+00	4.910E-04	0.000E+00	6.230E-04	0.000E+00	1.570E-02	0.000E+00	8.710E-05
FE-55	3.260E+05	2.260E+05	0.000E+00	0.000E+00	1.260E+05	1.290E+05	0.000E+00	5.260E+04
FE-59	3.860E+05	9.070E+05	0.000E+00	0.000E+00	2.540E+05	3.020E+06	0.000E+00	3.480E+05
CO-58	0.000E+00	5.660E+05	0.000E+00	0.000E+00	0.000E+00	1.150E+07	0.000E+00	1.270E+06
CO-60	0.000E+00	1.970E+06	0.000E+00	0.000E+00	0.000E+00	3.700E+07	0.000E+00	4.340E+06
NI-63	8.070E+08	5.600E+07	0.000E+00	0.000E+00	0.000E+00	1.170E+07	0.000E+00	2.710E+07
NI-65	4.440E-02	5.770E-03	0.000E+00	0.000E+00	0.000E+00	1.460E-01	0.000E+00	2.630E-03
CU-64	0.000E+00	2.660E+03	0.000E+00	6.700E+03	0.000E+00	2.260E+05	0.000E+00	1.250E+03
ZN-65	1.650E+08	5.240E+08	0.000E+00	3.500E+08	0.000E+00	3.300E+08	0.000E+00	2.370E+08
ZN-69	2.510E-13	4.800E-13	0.000E+00	3.120E-13	0.000E+00	7.210E-14	0.000E+00	3.340E-14
BR-83	0.000E+00	0.000E+00	0.000E+00	0.000E+00	0.000E+00	1.680E-02	0.000E+00	1.170E-02
BR-84	0.000E+00	0.000E+00	0.000E+00	0.000E+00	0.000E+00	1.520E-29	0.000E+00	1.930E-24
BR-85	0.000E+00	0.000E+00	0.000E+00	0.000E+00	0.000E+00	0.000E+00	0.000E+00	0.000E+00
RB-86	0.000E+00	3.110E+08	0.000E+00	0.000E+00	0.000E+00	6.140E+07	0.000E+00	1.450E+08
RB-88	0.000E+00	2.570E-46	0.000E+00	0.000E+00	0.000E+00	3.550E-57	0.000E+00	1.360E-46
RB-89	0.000E+00	5.190E-54	0.000E+00	0.000E+00	0.000E+00	3.020E-67	0.000E+00	3.650E-54
SR-89	3.050E+09	0.000E+00	0.000E+00	0.000E+00	0.000E+00	4.890E+08	0.000E+00	8.750E+07
SR-90	9.830E+10	0.000E+00	0.000E+00	0.000E+00	0.000E+00	2.840E+09	0.000E+00	2.410E+10
SR-91	6.070E+04	0.000E+00	0.000E+00	0.000E+00	0.000E+00	2.890E+05	0.000E+00	2.450E+03

APPENDIX G

R_i Adult Dose Factors for use in the Gaseous Dose Calculations

Agegroup:	ADULT	Pathway:	Grs/Goat/Milk (GMILK)			Units:	m^2·mrem/yr / mCi/sec; mrem/yr / mCi/m^3 (H-3)	
Nuclide	**Bone**	**Liver**	**Thyroid**	**Kidney**	**Lung**	**Gilli**	**Skin**	**Total Body**
SR-92	1.030E+00	0.000E+00	0.000E+00	0.000E+00	0.000E+00	2.030E+01	0.000E+00	4.440E-02
Y-90	8.500E+00	0.000E+00	0.000E+00	0.000E+00	0.000E+00	9.010E+04	0.000E+00	2.280E-01
Y-91	1.030E+03	0.000E+00	0.000E+00	0.000E+00	0.000E+00	5.670E+05	0.000E+00	2.760E+01
Y-91M	7.170E-21	0.000E+00	0.000E+00	0.000E+00	0.000E+00	2.110E-20	0.000E+00	2.780E-22
Y-92	6.690E-06	0.000E+00	0.000E+00	0.000E+00	0.000E+00	1.170E-01	0.000E+00	1.960E-07
Y-93	2.680E-02	0.000E+00	0.000E+00	0.000E+00	0.000E+00	8.500E+02	0.000E+00	7.400E-04
ZR-95	1.130E+02	3.630E+01	0.000E+00	5.700E+01	0.000E+00	1.150E+05	0.000E+00	2.460E+01
ZR-97	5.200E-02	1.050E-02	0.000E+00	1.580E-02	0.000E+00	3.250E+03	0.000E+00	4.800E-03
NB-95	9.910E+03	5.510E+03	0.000E+00	5.450E+03	0.000E+00	3.340E+07	0.000E+00	2.960E+03
MO-99	0.000E+00	2.970E+06	0.000E+00	6.730E+06	0.000E+00	6.890E+06	0.000E+00	5.660E+05
TC-99M	3.980E-01	1.130E+00	0.000E+00	1.710E+01	5.520E-01	6.660E+02	0.000E+00	1.430E+01
TC-101	3.110E-61	4.490E-61	0.000E+00	8.080E-60	2.290E-61	1.350E-72	0.000E+00	4.400E-60
RU-103	1.220E+02	0.000E+00	0.000E+00	4.660E+02	0.000E+00	1.430E+04	0.000E+00	5.260E+01
RU-105	1.030E-04	0.000E+00	0.000E+00	1.330E-03	0.000E+00	6.290E-02	0.000E+00	4.060E-05
RU-106	2.450E+03	0.000E+00	0.000E+00	4.730E+03	0.000E+00	1.580E+05	0.000E+00	3.100E+02
AG-110M	6.990E+06	6.460E+06	0.000E+00	1.270E+07	0.000E+00	2.640E+09	0.000E+00	3.840E+06
TE-125M	1.950E+06	7.080E+05	5.880E+05	7.950E+06	0.000E+00	7.800E+06	0.000E+00	2.620E+05
TE-127	7.830E+01	2.810E+01	5.800E+01	3.190E+02	0.000E+00	6.180E+03	0.000E+00	1.700E+01
TE-127M	5.490E+06	1.960E+06	1.400E+06	2.230E+07	0.000E+00	1.840E+07	0.000E+00	6.690E+05
TE-129	3.390E-11	1.270E-11	2.600E-11	1.430E-10	0.000E+00	2.560E-11	0.000E+00	8.260E-12
TE-129M	7.220E+06	2.690E+06	2.480E+06	3.020E+07	0.000E+00	3.640E+07	0.000E+00	1.140E+06
TE-131	4.320E-34	1.810E-34	3.550E-34	1.890E-33	0.000E+00	6.120E-35	0.000E+00	1.360E-34
TE-131M	4.330E+04	2.120E+04	3.360E+04	2.150E+05	0.000E+00	2.100E+06	0.000E+00	1.770E+04
TE-132	2.880E+05	1.860E+05	2.060E+05	1.800E+06	0.000E+00	8.820E+06	0.000E+00	1.750E+05
I-130	5.040E+05	1.490E+06	1.260E+08	2.320E+06	0.000E+00	1.280E+06	0.000E+00	5.870E+05

APPENDIX G

R_i Adult Dose Factors for use in the Gaseous Dose Calculations

Agegroup:	ADULT	Pathway:	Grs/Goat/Milk (GMILK)			Units:	m^2·mrem/yr / mCi/sec; mrem/yr / mCi/m^3 (H-3)	
Nuclide	**Bone**	**Liver**	**Thyroid**	**Kidney**	**Lung**	**Gilli**	**Skin**	**Total Body**
I-131	3.550E+08	5.080E+08	1.670E+11	8.710E+08	0.000E+00	1.340E+08	0.000E+00	2.910E+08
I-132	1.970E-01	5.270E-01	1.840E+01	8.400E-01	0.000E+00	9.900E-02	0.000E+00	1.840E-01
I-133	4.640E+06	8.080E+06	1.190E+09	1.410E+07	0.000E+00	7.260E+06	0.000E+00	2.460E+06
I-134	2.420E-12	6.570E-12	1.140E-10	1.050E-11	0.000E+00	5.730E-15	0.000E+00	2.350E-12
I-135	1.540E+04	4.030E+04	2.660E+06	6.470E+04	0.000E+00	4.560E+04	0.000E+00	1.490E+04
CS-134	1.700E+10	4.040E+10	0.000E+00	1.310E+10	4.340E+09	7.060E+08	0.000E+00	3.300E+10
CS-136	7.900E+08	3.120E+09	0.000E+00	1.730E+09	2.380E+08	3.540E+08	0.000E+00	2.240E+09
CS-137	2.210E+10	3.030E+10	0.000E+00	1.030E+10	3.420E+09	5.860E+08	0.000E+00	1.980E+10
CS-138	2.710E-23	5.360E-23	0.000E+00	3.940E-23	3.890E-24	2.290E-28	0.000E+00	2.650E-23
BA-139	5.300E-09	3.780E-12	0.000E+00	3.530E-12	2.140E-12	9.400E-09	0.000E+00	1.550E-10
BA-140	3.230E+06	4.050E+03	0.000E+00	1.380E+03	2.320E+03	6.640E+06	0.000E+00	2.110E+05
BA-141	4.910E-47	3.710E-50	0.000E+00	3.450E-50	2.110E-50	2.310E-56	0.000E+00	1.660E-48
BA-142	3.170E-81	3.260E-84	0.000E+00	2.750E-84	1.850E-84	0.000E+00	0.000E+00	2.000E-82
LA-140	5.410E-01	2.730E-01	0.000E+00	0.000E+00	0.000E+00	2.000E+04	0.000E+00	7.210E-02
LA-142	2.230E-12	1.010E-12	0.000E+00	0.000E+00	0.000E+00	7.410E-09	0.000E+00	2.530E-13
CE-141	5.810E+02	3.930E+02	0.000E+00	1.830E+02	0.000E+00	1.500E+06	0.000E+00	4.460E+01
CE-143	4.990E+00	3.690E+03	0.000E+00	1.620E+00	0.000E+00	1.380E+05	0.000E+00	4.080E-01
CE-144	4.290E+04	1.790E+04	0.000E+00	1.060E+04	0.000E+00	1.450E+07	0.000E+00	2.300E+03
PR-143	1.890E+01	7.600E+00	0.000E+00	4.390E+00	0.000E+00	8.300E+04	0.000E+00	9.390E-01
PR-144	7.050E-55	2.930E-55	0.000E+00	1.650E-55	0.000E+00	1.010E-61	0.000E+00	3.580E-56
ND-147	1.130E+01	1.310E+01	0.000E+00	7.630E+00	0.000E+00	6.270E+04	0.000E+00	7.810E-01
W-187	7.820E+02	6.530E+02	0.000E+00	0.000E+00	0.000E+00	2.140E+05	0.000E+00	2.280E+02
NP-239	4.410E-01	4.330E-02	0.000E+00	1.350E-01	0.000E+00	8.890E+03	0.000E+00	2.390E-02

APPENDIX G

R_i Adult Dose Factors for use in the Gaseous Dose Calculations

Agegroup:	ADULT	Pathway:	Grs/Cow/Meat (CMEAT)			Units:	m^2·mrem/yr / mCi/sec; mrem/yr / mCi/m^3 (H-3)	
Nuclide	**Bone**	**Liver**	**Thyroid**	**Kidney**	**Lung**	**Gilli**	**Skin**	**Total Body**
H-3	0.000E+00	3.250E+02	3.250E+02	3.250E+02	3.250E+02	3.250E+02	0.000E+00	3.250E+02
C-14	2.410E+08	4.830E+07	4.830E+07	4.830E+07	4.830E+07	4.830E+07	0.000E+00	4.830E+07
NA-24	1.360E-03	1.360E-03	1.360E-03	1.360E-03	1.360E-03	1.360E-03	0.000E+00	1.360E-03
P-32	4.660E+09	2.900E+08	0.000E+00	0.000E+00	0.000E+00	5.240E+08	0.000E+00	1.800E+08
CR-51	0.000E+00	0.000E+00	4.210E+03	1.550E+03	9.350E+03	1.770E+06	0.000E+00	7.050E+03
MN-54	0.000E+00	9.180E+06	0.000E+00	2.730E+06	0.000E+00	2.810E+07	0.000E+00	1.750E+06
MN-56	0.000E+00	1.320E-53	0.000E+00	1.680E-53	0.000E+00	4.220E-52	0.000E+00	2.350E-54
FE-55	2.930E+08	2.030E+08	0.000E+00	0.000E+00	1.130E+08	1.160E+08	0.000E+00	4.720E+07
FE-59	2.660E+08	6.240E+08	0.000E+00	0.000E+00	1.740E+08	2.080E+09	0.000E+00	2.390E+08
CO-58	0.000E+00	1.820E+07	0.000E+00	0.000E+00	0.000E+00	3.690E+08	0.000E+00	4.090E+07
CO-60	0.000E+00	7.520E+07	0.000E+00	0.000E+00	0.000E+00	1.410E+09	0.000E+00	1.660E+08
NI-63	1.890E+10	1.310E+09	0.000E+00	0.000E+00	0.000E+00	2.730E+08	0.000E+00	6.330E+08
NI-65	2.250E-52	2.920E-53	0.000E+00	0.000E+00	0.000E+00	7.400E-52	0.000E+00	1.330E-53
CU-64	0.000E+00	2.710E-07	0.000E+00	6.830E-07	0.000E+00	2.310E-05	0.000E+00	1.270E-07
ZN-65	3.560E+08	1.130E+09	0.000E+00	7.570E+08	0.000E+00	7.130E+08	0.000E+00	5.120E+08
ZN-69	0.000E+00	0.000E+00	0.000E+00	0.000E+00	0.000E+00	0.000E+00	0.000E+00	0.000E+00
BR-83	0.000E+00	0.000E+00	0.000E+00	0.000E+00	0.000E+00	8.650E-57	0.000E+00	6.000E-57
BR-84	0.000E+00	0.000E+00	0.000E+00	0.000E+00	0.000E+00	0.000E+00	0.000E+00	0.000E+00
BR-85	0.000E+00	0.000E+00	0.000E+00	0.000E+00	0.000E+00	0.000E+00	0.000E+00	0.000E+00
RB-86	0.000E+00	4.870E+08	0.000E+00	0.000E+00	0.000E+00	9.600E+07	0.000E+00	2.270E+08
RB-88	0.000E+00	0.000E+00	0.000E+00	0.000E+00	0.000E+00	0.000E+00	0.000E+00	0.000E+00
RB-89	0.000E+00	0.000E+00	0.000E+00	0.000E+00	0.000E+00	0.000E+00	0.000E+00	0.000E+00
SR-89	3.020E+08	0.000E+00	0.000E+00	0.000E+00	0.000E+00	4.840E+07	0.000E+00	8.660E+06
SR-90	1.240E+10	0.000E+00	0.000E+00	0.000E+00	0.000E+00	3.590E+08	0.000E+00	3.050E+09
SR-91	1.520E-10	0.000E+00	0.000E+00	0.000E+00	0.000E+00	7.240E-10	0.000E+00	6.140E-12

APPENDIX G

R_i Adult Dose Factors for use in the Gaseous Dose Calculations

Agegroup:	ADULT	Pathway:	Grs/Cow/Meat (CMEAT)			Units:	m^2·mrem/yr / mCi/sec; mrem/yr / mCi/m^3 (H-3)	
Nuclide	**Bone**	**Liver**	**Thyroid**	**Kidney**	**Lung**	**Gilli**	**Skin**	**Total Body**
SR-92	1.180E-49	0.000E+00	0.000E+00	0.000E+00	0.000E+00	2.340E-48	0.000E+00	5.100E-51
Y-90	1.080E+02	0.000E+00	0.000E+00	0.000E+00	0.000E+00	1.140E+06	0.000E+00	2.890E+00
Y-91	1.130E+06	0.000E+00	0.000E+00	0.000E+00	0.000E+00	6.230E+08	0.000E+00	3.030E+04
Y-91M	0.000E+00	0.000E+00	0.000E+00	0.000E+00	0.000E+00	0.000E+00	0.000E+00	0.000E+00
Y-92	1.520E-39	0.000E+00	0.000E+00	0.000E+00	0.000E+00	2.660E-35	0.000E+00	4.430E-41
Y-93	4.690E-12	0.000E+00	0.000E+00	0.000E+00	0.000E+00	1.490E-07	0.000E+00	1.300E-13
ZR-95	1.870E+06	6.010E+05	0.000E+00	9.420E+05	0.000E+00	1.900E+09	0.000E+00	4.070E+05
ZR-97	2.070E-05	4.170E-06	0.000E+00	6.300E-06	0.000E+00	1.290E+00	0.000E+00	1.910E-06
NB-95	2.300E+06	1.280E+06	0.000E+00	1.260E+06	0.000E+00	7.760E+09	0.000E+00	6.870E+05
MO-99	0.000E+00	1.000E+05	0.000E+00	2.260E+05	0.000E+00	2.320E+05	0.000E+00	1.900E+04
TC-99M	4.450E-21	1.260E-20	0.000E+00	1.910E-19	6.150E-21	7.430E-18	0.000E+00	1.600E-19
TC-101	0.000E+00	0.000E+00	0.000E+00	0.000E+00	0.000E+00	0.000E+00	0.000E+00	0.000E+00
RU-103	1.050E+08	0.000E+00	0.000E+00	4.010E+08	0.000E+00	1.230E+10	0.000E+00	4.530E+07
RU-105	5.780E-28	0.000E+00	0.000E+00	7.460E-27	0.000E+00	3.530E-25	0.000E+00	2.280E-28
RU-106	2.800E+09	0.000E+00	0.000E+00	5.400E+09	0.000E+00	1.810E+11	0.000E+00	3.540E+08
AG-110M	6.680E+06	6.180E+06	0.000E+00	1.220E+07	0.000E+00	2.520E+09	0.000E+00	3.670E+06
TE-125M	3.590E+08	1.300E+08	1.080E+08	1.460E+09	0.000E+00	1.430E+09	0.000E+00	4.810E+07
TE-127	2.120E-10	7.610E-11	1.570E-10	8.640E-10	0.000E+00	1.670E-08	0.000E+00	4.590E-11
TE-127M	1.120E+09	3.990E+08	2.850E+08	4.530E+09	0.000E+00	3.740E+09	0.000E+00	1.360E+08
TE-129	0.000E+00	0.000E+00	0.000E+00	0.000E+00	0.000E+00	0.000E+00	0.000E+00	0.000E+00
TE-129M	1.130E+09	4.230E+08	3.900E+08	4.730E+09	0.000E+00	5.710E+09	0.000E+00	1.790E+08
TE-131	0.000E+00	0.000E+00	0.000E+00	0.000E+00	0.000E+00	0.000E+00	0.000E+00	0.000E+00
TE-131M	4.510E+02	2.210E+02	3.490E+02	2.230E+03	0.000E+00	2.190E+04	0.000E+00	1.840E+02
TE-132	1.420E+06	9.180E+05	1.010E+06	8.840E+06	0.000E+00	4.340E+07	0.000E+00	8.620E+05
I-130	2.110E-06	6.220E-06	5.270E-04	9.700E-06	0.000E+00	5.350E-06	0.000E+00	2.450E-06

APPENDIX G

R_i Adult Dose Factors for use in the Gaseous Dose Calculations

Agegroup:	ADULT	Pathway:	Grs/Cow/Meat (CMEAT)			Units:	m^2·mrem/yr / mCi/sec; mrem/yr / mCi/m^3 (H-3)	
Nuclide	**Bone**	**Liver**	**Thyroid**	**Kidney**	**Lung**	**Gilli**	**Skin**	**Total Body**
I-131	1.070E+07	1.540E+07	5.030E+09	2.630E+07	0.000E+00	4.050E+06	0.000E+00	8.800E+06
I-132	6.970E-59	1.860E-58	6.530E-57	2.970E-58	0.000E+00	3.500E-59	0.000E+00	6.530E-59
I-133	3.650E-01	6.350E-01	9.340E+01	1.110E+00	0.000E+00	5.710E-01	0.000E+00	1.940E-01
I-134	0.000E+00	0.000E+00	0.000E+00	0.000E+00	0.000E+00	0.000E+00	0.000E+00	0.000E+00
I-135	4.420E-17	1.160E-16	7.640E-15	1.860E-16	0.000E+00	1.310E-16	0.000E+00	4.270E-17
CS-134	6.580E+08	1.560E+09	0.000E+00	5.060E+08	1.680E+08	2.740E+07	0.000E+00	1.280E+09
CS-136	1.210E+07	4.760E+07	0.000E+00	2.650E+07	3.630E+06	5.410E+06	0.000E+00	3.420E+07
CS-137	8.720E+08	1.190E+09	0.000E+00	4.050E+08	1.350E+08	2.310E+07	0.000E+00	7.810E+08
CS-138	0.000E+00	0.000E+00	0.000E+00	0.000E+00	0.000E+00	0.000E+00	0.000E+00	0.000E+00
BA-139	0.000E+00	0.000E+00	0.000E+00	0.000E+00	0.000E+00	0.000E+00	0.000E+00	0.000E+00
BA-140	2.870E+07	3.610E+04	0.000E+00	1.230E+04	2.070E+04	5.920E+07	0.000E+00	1.880E+06
BA-141	0.000E+00	0.000E+00	0.000E+00	0.000E+00	0.000E+00	0.000E+00	0.000E+00	0.000E+00
BA-142	0.000E+00	0.000E+00	0.000E+00	0.000E+00	0.000E+00	0.000E+00	0.000E+00	0.000E+00
LA-140	3.710E-02	1.870E-02	0.000E+00	0.000E+00	0.000E+00	1.370E+03	0.000E+00	4.940E-03
LA-142	3.470E-92	1.580E-92	0.000E+00	0.000E+00	0.000E+00	1.150E-88	0.000E+00	3.940E-93
CE-141	1.400E+04	9.500E+03	0.000E+00	4.410E+03	0.000E+00	3.630E+07	0.000E+00	1.080E+03
CE-143	2.010E-02	1.480E+01	0.000E+00	6.530E-03	0.000E+00	5.550E+02	0.000E+00	1.640E-03
CE-144	1.460E+06	6.090E+05	0.000E+00	3.610E+05	0.000E+00	4.930E+08	0.000E+00	7.830E+04
PR-143	2.100E+04	8.410E+03	0.000E+00	4.850E+03	0.000E+00	9.180E+07	0.000E+00	1.040E+03
PR-144	0.000E+00	0.000E+00	0.000E+00	0.000E+00	0.000E+00	0.000E+00	0.000E+00	0.000E+00
ND-147	7.070E+03	8.170E+03	0.000E+00	4.780E+03	0.000E+00	3.920E+07	0.000E+00	4.890E+02
W-187	2.070E-02	1.730E-02	0.000E+00	0.000E+00	0.000E+00	5.660E+00	0.000E+00	6.040E-03
NP-239	2.590E-01	2.550E-02	0.000E+00	7.950E-02	0.000E+00	5.230E+03	0.000E+00	1.400E-02

APPENDIX G

R_i Adult Dose Factors for use in the Gaseous Dose Calculations

Agegroup:	ADULT	Pathway:	Vegetation (VEG)			Units:	m^2·mrem/yr / mCi/sec; mrem/yr / mCi/m^3 (H-3)	
Nuclide	**Bone**	**Liver**	**Thyroid**	**Kidney**	**Lung**	**Gilli**	**Skin**	**Total Body**
H-3	0.000E+00	2.260E+03	2.260E+03	2.260E+03	2.260E+03	2.260E+03	0.000E+00	2.260E+03
C-14	2.280E+08	4.550E+07	4.550E+07	4.550E+07	4.550E+07	4.550E+07	0.000E+00	4.550E+07
NA-24	2.690E+05	2.690E+05	2.690E+05	2.690E+05	2.690E+05	2.690E+05	0.000E+00	2.690E+05
P-32	1.400E+09	8.730E+07	0.000E+00	0.000E+00	0.000E+00	1.580E+08	0.000E+00	5.430E+07
CR-51	0.000E+00	0.000E+00	2.780E+04	1.020E+04	6.160E+04	1.170E+07	0.000E+00	4.640E+04
MN-54	0.000E+00	3.130E+08	0.000E+00	9.310E+07	0.000E+00	9.590E+08	0.000E+00	5.970E+07
MN-56	0.000E+00	1.580E+01	0.000E+00	2.000E+01	0.000E+00	5.040E+02	0.000E+00	2.800E+00
FE-55	2.100E+08	1.450E+08	0.000E+00	0.000E+00	8.080E+07	8.310E+07	0.000E+00	3.380E+07
FE-59	1.260E+08	2.960E+08	0.000E+00	0.000E+00	8.280E+07	9.880E+08	0.000E+00	1.140E+08
CO-58	0.000E+00	3.070E+07	0.000E+00	0.000E+00	0.000E+00	6.230E+08	0.000E+00	6.890E+07
CO-60	0.000E+00	1.670E+08	0.000E+00	0.000E+00	0.000E+00	3.140E+09	0.000E+00	3.690E+08
NI-63	1.040E+10	7.210E+08	0.000E+00	0.000E+00	0.000E+00	1.500E+08	0.000E+00	3.490E+08
NI-65	6.150E+01	7.990E+00	0.000E+00	0.000E+00	0.000E+00	2.030E+02	0.000E+00	3.640E+00
CU-64	0.000E+00	9.200E+03	0.000E+00	2.320E+04	0.000E+00	7.840E+05	0.000E+00	4.320E+03
ZN-65	3.170E+08	1.010E+09	0.000E+00	6.750E+08	0.000E+00	6.360E+08	0.000E+00	4.560E+08
ZN-69	5.490E-06	1.050E-05	0.000E+00	6.830E-06	0.000E+00	1.580E-06	0.000E+00	7.310E-07
BR-83	0.000E+00	0.000E+00	0.000E+00	0.000E+00	0.000E+00	4.470E+00	0.000E+00	3.110E+00
BR-84	0.000E+00	0.000E+00	0.000E+00	0.000E+00	0.000E+00	1.940E-16	0.000E+00	2.480E-11
BR-85	0.000E+00	0.000E+00	0.000E+00	0.000E+00	0.000E+00	0.000E+00	0.000E+00	0.000E+00
RB-86	0.000E+00	2.190E+08	0.000E+00	0.000E+00	0.000E+00	4.330E+07	0.000E+00	1.020E+08
RB-88	0.000E+00	3.430E-22	0.000E+00	0.000E+00	0.000E+00	4.740E-33	0.000E+00	1.820E-22
RB-89	0.000E+00	3.890E-26	0.000E+00	0.000E+00	0.000E+00	2.260E-39	0.000E+00	2.730E-26
SR-89	9.970E+09	0.000E+00	0.000E+00	0.000E+00	0.000E+00	1.600E+09	0.000E+00	2.860E+08
SR-90	6.050E+11	0.000E+00	0.000E+00	0.000E+00	0.000E+00	1.750E+10	0.000E+00	1.480E+11
SR-91	3.050E+05	0.000E+00	0.000E+00	0.000E+00	0.000E+00	1.450E+06	0.000E+00	1.230E+04

APPENDIX G

R_i Adult Dose Factors for use in the Gaseous Dose Calculations

Agegroup:	ADULT	Pathway:	Vegetation (VEG)			Units:	m^2·mrem/yr / mCi/sec; mrem/yr / mCi/m^3 (H-3)	
Nuclide	**Bone**	**Liver**	**Thyroid**	**Kidney**	**Lung**	**Gilli**	**Skin**	**Total Body**
SR-92	4.270E+02	0.000E+00	0.000E+00	0.000E+00	0.000E+00	8.450E+03	0.000E+00	1.850E+01
Y-90	1.330E+04	0.000E+00	0.000E+00	0.000E+00	0.000E+00	1.410E+08	0.000E+00	3.570E+02
Y-91	5.110E+06	0.000E+00	0.000E+00	0.000E+00	0.000E+00	2.810E+09	0.000E+00	1.370E+05
Y-91M	5.220E-09	0.000E+00	0.000E+00	0.000E+00	0.000E+00	1.530E-08	0.000E+00	2.020E-10
Y-92	9.150E-01	0.000E+00	0.000E+00	0.000E+00	0.000E+00	1.600E+04	0.000E+00	2.680E-02
Y-93	1.700E+02	0.000E+00	0.000E+00	0.000E+00	0.000E+00	5.380E+06	0.000E+00	4.680E+00
ZR-95	1.170E+06	3.770E+05	0.000E+00	5.910E+05	0.000E+00	1.190E+09	0.000E+00	2.550E+05
ZR-97	3.370E+02	6.810E+01	0.000E+00	1.030E+02	0.000E+00	2.110E+07	0.000E+00	3.110E+01
NB-95	1.420E+05	7.920E+04	0.000E+00	7.830E+04	0.000E+00	4.810E+08	0.000E+00	4.260E+04
MO-99	0.000E+00	6.150E+06	0.000E+00	1.390E+07	0.000E+00	1.430E+07	0.000E+00	1.170E+06
TC-99M	3.100E+00	8.770E+00	0.000E+00	1.330E+02	4.300E+00	5.190E+03	0.000E+00	1.120E+02
TC-101	8.220E-31	1.180E-30	0.000E+00	2.130E-29	6.050E-31	3.560E-42	0.000E+00	1.160E-29
RU-103	4.770E+06	0.000E+00	0.000E+00	1.820E+07	0.000E+00	5.570E+08	0.000E+00	2.060E+06
RU-105	5.390E+01	0.000E+00	0.000E+00	6.960E+02	0.000E+00	3.290E+04	0.000E+00	2.130E+01
RU-106	1.930E+08	0.000E+00	0.000E+00	3.720E+08	0.000E+00	1.250E+10	0.000E+00	2.440E+07
AG-110M	1.050E+07	9.750E+06	0.000E+00	1.920E+07	0.000E+00	3.980E+09	0.000E+00	5.790E+06
TE-125M	9.660E+07	3.500E+07	2.900E+07	3.930E+08	0.000E+00	3.860E+08	0.000E+00	1.290E+07
TE-127	5.660E+03	2.030E+03	4.190E+03	2.310E+04	0.000E+00	4.470E+05	0.000E+00	1.220E+03
TE-127M	3.490E+08	1.250E+08	8.920E+07	1.420E+09	0.000E+00	1.170E+09	0.000E+00	4.260E+07
TE-129	7.630E-04	2.870E-04	5.850E-04	3.210E-03	0.000E+00	5.760E-04	0.000E+00	1.860E-04
TE-129M	2.510E+08	9.380E+07	8.630E+07	1.050E+09	0.000E+00	1.270E+09	0.000E+00	3.980E+07
TE-131	1.500E-15	6.270E-16	1.230E-15	6.570E-15	0.000E+00	2.130E-16	0.000E+00	4.740E-16
TE-131M	9.120E+05	4.460E+05	7.060E+05	4.520E+06	0.000E+00	4.430E+07	0.000E+00	3.720E+05
TE-132	4.300E+06	2.780E+06	3.070E+06	2.680E+07	0.000E+00	1.320E+08	0.000E+00	2.610E+06
I-130	3.920E+05	1.160E+06	9.810E+07	1.810E+06	0.000E+00	9.960E+05	0.000E+00	4.570E+05

APPENDIX G

R_i Adult Dose Factors for use in the Gaseous Dose Calculations

Agegroup:	ADULT	Pathway:	Vegetation (VEG)			Units:	m^2·mrem/yr / mCi/sec; mrem/yr / mCi/m^3 (H-3)	
Nuclide	**Bone**	**Liver**	**Thyroid**	**Kidney**	**Lung**	**Gilli**	**Skin**	**Total Body**
I-131	8.080E+07	1.160E+08	3.790E+10	1.980E+08	0.000E+00	3.050E+07	0.000E+00	6.620E+07
I-132	5.760E+01	1.540E+02	5.390E+03	2.450E+02	0.000E+00	2.890E+01	0.000E+00	5.390E+01
I-133	2.090E+06	3.630E+06	5.330E+08	6.330E+06	0.000E+00	3.260E+06	0.000E+00	1.110E+06
I-134	9.650E-05	2.620E-04	4.540E-03	4.170E-04	0.000E+00	2.290E-07	0.000E+00	9.380E-05
I-135	3.900E+04	1.020E+05	6.730E+06	1.640E+05	0.000E+00	1.150E+05	0.000E+00	3.770E+04
CS-134	4.670E+09	1.110E+10	0.000E+00	3.590E+09	1.190E+09	1.940E+08	0.000E+00	9.080E+09
CS-136	4.270E+07	1.680E+08	0.000E+00	9.380E+07	1.290E+07	1.910E+07	0.000E+00	1.210E+08
CS-137	6.360E+09	8.700E+09	0.000E+00	2.950E+09	9.810E+08	1.680E+08	0.000E+00	5.700E+09
CS-138	3.920E-11	7.730E-11	0.000E+00	5.680E-11	5.610E-12	3.300E-16	0.000E+00	3.830E-11
BA-139	2.860E-02	2.030E-05	0.000E+00	1.900E-05	1.150E-05	5.060E-02	0.000E+00	8.360E-04
BA-140	1.280E+08	1.610E+05	0.000E+00	5.490E+04	9.240E+04	2.650E+08	0.000E+00	8.420E+06
BA-141	1.150E-21	8.700E-25	0.000E+00	8.090E-25	4.940E-25	5.430E-31	0.000E+00	3.890E-23
BA-142	5.960E-39	6.120E-42	0.000E+00	5.170E-42	3.470E-42	8.390E-57	0.000E+00	3.750E-40
LA-140	1.980E+03	9.970E+02	0.000E+00	0.000E+00	0.000E+00	7.320E+07	0.000E+00	2.630E+02
LA-142	2.020E-04	9.190E-05	0.000E+00	0.000E+00	0.000E+00	6.710E-01	0.000E+00	2.290E-05
CE-141	1.970E+05	1.330E+05	0.000E+00	6.190E+04	0.000E+00	5.100E+08	0.000E+00	1.510E+04
CE-143	9.980E+02	7.380E+05	0.000E+00	3.250E+02	0.000E+00	2.760E+07	0.000E+00	8.160E+01
CE-144	3.290E+07	1.380E+07	0.000E+00	8.160E+06	0.000E+00	1.110E+10	0.000E+00	1.770E+06
PR-143	6.260E+04	2.510E+04	0.000E+00	1.450E+04	0.000E+00	2.740E+08	0.000E+00	3.100E+03
PR-144	3.090E-26	1.280E-26	0.000E+00	7.230E-27	0.000E+00	4.440E-33	0.000E+00	1.570E-27
ND-147	3.330E+04	3.850E+04	0.000E+00	2.250E+04	0.000E+00	1.850E+08	0.000E+00	2.310E+03
W-187	3.800E+04	3.180E+04	0.000E+00	0.000E+00	0.000E+00	1.040E+07	0.000E+00	1.110E+04
NP-239	1.430E+03	1.400E+02	0.000E+00	4.380E+02	0.000E+00	2.880E+07	0.000E+00	7.740E+01

APPENDIX G

R_i Adult Dose Factors for use in the Gaseous Dose Calculations

Agegroup:	ADULT	Pathway:	Inhalation (INHL)			Units:	mrem/yr / mCi/m^3	
Nuclide	**Bone**	**Liver**	**Thyroid**	**Kidney**	**Lung**	**Gilli**	**Skin**	**Total Body**
H-3	0.000E+00	1.260E+03	1.260E+03	1.260E+03	1.260E+03	1.260E+03	0.000E+00	1.260E+03
C-14	1.820E+04	3.410E+03	3.410E+03	3.410E+03	3.410E+03	3.410E+03	0.000E+00	3.410E+03
NA-24	1.020E+04	1.020E+04	1.020E+04	1.020E+04	1.020E+04	1.020E+04	0.000E+00	1.020E+04
P-32	1.320E+06	7.710E+04	0.000E+00	0.000E+00	0.000E+00	8.640E+04	0.000E+00	5.010E+04
CR-51	0.000E+00	0.000E+00	5.950E+01	2.280E+01	1.440E+04	3.320E+03	0.000E+00	1.000E+02
MN-54	0.000E+00	3.960E+04	0.000E+00	9.840E+03	1.400E+06	7.740E+04	0.000E+00	6.300E+03
MN-56	0.000E+00	1.240E+00	0.000E+00	1.300E+00	9.440E+03	2.020E+04	0.000E+00	1.830E-01
FE-55	2.460E+04	1.700E+04	0.000E+00	0.000E+00	7.210E+04	6.030E+03	0.000E+00	3.940E+03
FE-59	1.180E+04	2.780E+04	0.000E+00	0.000E+00	1.020E+06	1.880E+05	0.000E+00	1.060E+04
CO-58	0.000E+00	1.580E+03	0.000E+00	0.000E+00	9.280E+05	1.060E+05	0.000E+00	2.070E+03
CO-60	0.000E+00	1.150E+04	0.000E+00	0.000E+00	5.970E+06	2.850E+05	0.000E+00	1.480E+04
NI-63	4.320E+05	3.140E+04	0.000E+00	0.000E+00	1.780E+05	1.340E+04	0.000E+00	1.450E+04
NI-65	1.540E+00	2.100E-01	0.000E+00	0.000E+00	5.600E+03	1.230E+04	0.000E+00	9.120E-02
CU-64	0.000E+00	1.460E+00	0.000E+00	4.620E+00	6.780E+03	4.900E+04	0.000E+00	6.150E-01
ZN-65	3.240E+04	1.030E+05	0.000E+00	6.900E+04	8.640E+05	5.340E+04	0.000E+00	4.660E+04
ZN-69	3.380E-02	6.510E-02	0.000E+00	4.220E-02	9.200E+02	1.630E+01	0.000E+00	4.520E-03
BR-83	0.000E+00	0.000E+00	0.000E+00	0.000E+00	0.000E+00	2.320E+02	0.000E+00	2.410E+02
BR-84	0.000E+00	0.000E+00	0.000E+00	0.000E+00	0.000E+00	1.640E-03	0.000E+00	3.130E+02
BR-85	0.000E+00	0.000E+00	0.000E+00	0.000E+00	0.000E+00	0.000E+00	0.000E+00	1.280E+01
RB-86	0.000E+00	1.350E+05	0.000E+00	0.000E+00	0.000E+00	1.660E+04	0.000E+00	5.900E+04
RB-88	0.000E+00	3.870E+02	0.000E+00	0.000E+00	0.000E+00	3.340E-09	0.000E+00	1.930E+02
RB-89	0.000E+00	2.560E+02	0.000E+00	0.000E+00	0.000E+00	9.280E-12	0.000E+00	1.700E+02
SR-89	3.040E+05	0.000E+00	0.000E+00	0.000E+00	1.400E+06	3.500E+05	0.000E+00	8.720E+03
SR-90	9.920E+07	0.000E+00	0.000E+00	0.000E+00	9.600E+06	7.220E+05	0.000E+00	6.100E+06
SR-91	6.190E+01	0.000E+00	0.000E+00	0.000E+00	3.650E+04	1.910E+05	0.000E+00	2.500E+00

APPENDIX G

R_i Adult Dose Factors for use in the Gaseous Dose Calculations

Agegroup:	ADULT	Pathway:	Inhalation (INHL)			Units:	mrem/yr / mCi/m^3	
Nuclide	**Bone**	**Liver**	**Thyroid**	**Kidney**	**Lung**	**Gilli**	**Skin**	**Total Body**
SR-92	6.740E+00	0.000E+00	0.000E+00	0.000E+00	1.650E+04	4.300E+04	0.000E+00	2.910E-01
Y-90	2.090E+03	0.000E+00	0.000E+00	0.000E+00	1.700E+05	5.060E+05	0.000E+00	5.610E+01
Y-91	4.620E+05	0.000E+00	0.000E+00	0.000E+00	1.700E+06	3.850E+05	0.000E+00	1.240E+04
Y-91M	2.610E-01	0.000E+00	0.000E+00	0.000E+00	1.920E+03	1.330E+00	0.000E+00	1.020E-02
Y-92	1.030E+01	0.000E+00	0.000E+00	0.000E+00	1.570E+04	7.350E+04	0.000E+00	3.020E-01
Y-93	9.440E+01	0.000E+00	0.000E+00	0.000E+00	4.850E+04	4.220E+05	0.000E+00	2.610E+00
ZR-95	1.070E+05	3.440E+04	0.000E+00	5.420E+04	1.770E+06	1.500E+05	0.000E+00	2.330E+04
ZR-97	9.680E+01	1.960E+01	0.000E+00	2.970E+01	7.870E+04	5.230E+05	0.000E+00	9.040E+00
NB-95	1.410E+04	7.820E+03	0.000E+00	7.740E+03	5.050E+05	1.040E+05	0.000E+00	4.210E+03
MO-99	0.000E+00	1.210E+02	0.000E+00	2.910E+02	9.120E+04	2.480E+05	0.000E+00	2.300E+01
TC-99M	1.030E-03	2.910E-03	0.000E+00	4.420E-02	7.640E+02	4.160E+03	0.000E+00	3.700E-02
TC-101	4.180E-05	6.020E-05	0.000E+00	1.080E-03	3.990E+02	1.090E-11	0.000E+00	5.900E-04
RU-103	1.530E+03	0.000E+00	0.000E+00	5.830E+03	5.050E+05	1.100E+05	0.000E+00	6.580E+02
RU-105	7.900E-01	0.000E+00	0.000E+00	1.020E+00	1.100E+04	4.820E+04	0.000E+00	3.110E-01
RU-106	6.910E+04	0.000E+00	0.000E+00	1.340E+05	9.360E+06	9.120E+05	0.000E+00	8.720E+03
AG-110M	1.080E+04	1.000E+04	0.000E+00	1.970E+04	4.630E+06	3.020E+05	0.000E+00	5.940E+03
TE-125M	3.420E+03	1.580E+03	1.050E+03	1.240E+04	3.140E+05	7.060E+04	0.000E+00	4.670E+02
TE-127	1.400E+00	6.420E-01	1.060E+00	5.100E+00	6.510E+03	5.740E+04	0.000E+00	3.100E-01
TE-127M	1.260E+04	5.770E+03	3.290E+03	4.580E+04	9.600E+05	1.500E+05	0.000E+00	1.570E+03
TE-129	4.980E-02	2.390E-02	3.900E-02	1.870E-01	1.940E+03	1.570E+02	0.000E+00	1.240E-02
TE-129M	9.760E+03	4.670E+03	3.440E+03	3.660E+04	1.160E+06	3.830E+05	0.000E+00	1.580E+03
TE-131	1.110E-02	5.950E-03	9.360E-03	4.370E-02	1.390E+03	1.840E+01	0.000E+00	3.590E-03
TE-131M	6.990E+01	4.360E+01	5.500E+01	3.090E+02	1.460E+05	5.560E+05	0.000E+00	2.900E+01
TE-132	2.600E+02	2.150E+02	1.900E+02	1.460E+03	2.880E+05	5.100E+05	0.000E+00	1.620E+02
I-130	4.580E+03	1.340E+04	1.140E+06	2.090E+04	0.000E+00	7.690E+03	0.000E+00	5.280E+03

APPENDIX G

R_i Adult Dose Factors for use in the Gaseous Dose Calculations

Agegroup:	ADULT	Pathway:	Inhalation (INHL)			Units:	mrem/yr / mCi/m^3	
Nuclide	**Bone**	**Liver**	**Thyroid**	**Kidney**	**Lung**	**Gilli**	**Skin**	**Total Body**
I-131	2.520E+04	3.580E+04	1.190E+07	6.130E+04	0.000E+00	6.280E+03	0.000E+00	2.050E+04
I-132	1.160E+03	3.260E+03	1.140E+05	5.180E+03	0.000E+00	4.060E+02	0.000E+00	1.160E+03
I-133	8.640E+03	1.480E+04	2.150E+06	2.580E+04	0.000E+00	8.880E+03	0.000E+00	4.520E+03
I-134	6.440E+02	1.730E+03	2.980E+04	2.750E+03	0.000E+00	1.010E+00	0.000E+00	6.150E+02
I-135	2.680E+03	6.980E+03	4.480E+05	1.110E+04	0.000E+00	5.250E+03	0.000E+00	2.570E+03
CS-134	3.730E+05	8.480E+05	0.000E+00	2.870E+05	9.760E+04	1.040E+04	0.000E+00	7.280E+05
CS-136	3.900E+04	1.460E+05	0.000E+00	8.560E+04	1.200E+04	1.170E+04	0.000E+00	1.100E+05
CS-137	4.780E+05	6.210E+05	0.000E+00	2.220E+05	7.520E+04	8.400E+03	0.000E+00	4.280E+05
CS-138	3.310E+02	6.210E+02	0.000E+00	4.800E+02	4.860E+01	1.860E-03	0.000E+00	3.240E+02
BA-139	9.360E-01	6.660E-04	0.000E+00	6.220E-04	3.760E+03	8.960E+02	0.000E+00	2.740E-02
BA-140	3.900E+04	4.900E+01	0.000E+00	1.670E+01	1.270E+06	2.180E+05	0.000E+00	2.570E+03
BA-141	1.000E-01	7.530E-05	0.000E+00	7.000E-05	1.940E+03	1.160E-07	0.000E+00	3.360E-03
BA-142	2.630E-02	2.700E-05	0.000E+00	2.290E-05	1.190E+03	1.570E-16	0.000E+00	1.660E-03
LA-140	3.440E+02	1.740E+02	0.000E+00	0.000E+00	1.360E+05	4.580E+05	0.000E+00	4.580E+01
LA-142	6.830E-01	3.100E-01	0.000E+00	0.000E+00	6.330E+03	2.110E+03	0.000E+00	7.720E-02
CE-141	1.990E+04	1.350E+04	0.000E+00	6.260E+03	3.620E+05	1.200E+05	0.000E+00	1.530E+03
CE-143	1.860E+02	1.380E+02	0.000E+00	6.080E+01	7.980E+04	2.260E+05	0.000E+00	1.530E+01
CE-144	3.430E+06	1.430E+06	0.000E+00	8.480E+05	7.780E+06	8.160E+05	0.000E+00	1.840E+05
PR-143	9.360E+03	3.750E+03	0.000E+00	2.160E+03	2.810E+05	2.000E+05	0.000E+00	4.640E+02
PR-144	3.010E-02	1.250E-02	0.000E+00	7.050E-03	1.020E+03	2.150E-08	0.000E+00	1.530E-03
ND-147	5.270E+03	6.100E+03	0.000E+00	3.560E+03	2.210E+05	1.730E+05	0.000E+00	3.650E+02
W-187	8.480E+00	7.080E+00	0.000E+00	0.000E+00	2.900E+04	1.550E+05	0.000E+00	2.480E+00
NP-239	2.300E+02	2.260E+01	0.000E+00	7.000E+01	3.760E+04	1.190E+05	0.000E+00	1.240E+01

APPENDIX G

R_i Adult Dose Factors for use in the Gaseous Dose Calculations

Agegroup:	ADULT	Pathway:	Ground Plane Deposition (GPD)			Units:	m^2·mrem/yr / mCi/sec	
Nuclide	**Bone**	**Liver**	**Thyroid**	**Kidney**	**Lung**	**Gilli**	**Skin**	**Total Body**
H-3	0.000E+00	0.000E+00	0.000E+00	0.000E+00	0.000E+00	0.000E+00	0.000E+00	0.000E+00
C-14	0.000E+00	0.000E+00	0.000E+00	0.000E+00	0.000E+00	0.000E+00	0.000E+00	0.000E+00
NA-24	1.190E+07	1.190E+07	1.190E+07	1.190E+07	1.190E+07	1.190E+07	1.390E+07	1.190E+07
P-32	0.000E+00	0.000E+00	0.000E+00	0.000E+00	0.000E+00	0.000E+00	0.000E+00	0.000E+00
CR-51	4.660E+06	4.660E+06	4.660E+06	4.660E+06	4.660E+06	4.660E+06	5.510E+06	4.660E+06
MN-54	1.390E+09	1.390E+09	1.390E+09	1.390E+09	1.390E+09	1.390E+09	1.630E+09	1.390E+09
MN-56	9.020E+05	9.020E+05	9.020E+05	9.020E+05	9.020E+05	9.020E+05	1.070E+06	9.020E+05
FE-55	0.000E+00	0.000E+00	0.000E+00	0.000E+00	0.000E+00	0.000E+00	0.000E+00	0.000E+00
FE-59	2.730E+08	2.730E+08	2.730E+08	2.730E+08	2.730E+08	2.730E+08	3.210E+08	2.730E+08
CO-58	3.790E+08	3.790E+08	3.790E+08	3.790E+08	3.790E+08	3.790E+08	4.440E+08	3.790E+08
CO-60	2.150E+10	2.150E+10	2.150E+10	2.150E+10	2.150E+10	2.150E+10	2.530E+10	2.150E+10
NI-63	0.000E+00	0.000E+00	0.000E+00	0.000E+00	0.000E+00	0.000E+00	0.000E+00	0.000E+00
NI-65	2.970E+05	2.970E+05	2.970E+05	2.970E+05	2.970E+05	2.970E+05	3.450E+05	2.970E+05
CU-64	6.070E+05	6.070E+05	6.070E+05	6.070E+05	6.070E+05	6.070E+05	6.880E+05	6.070E+05
ZN-65	7.470E+08	7.470E+08	7.470E+08	7.470E+08	7.470E+08	7.470E+08	8.590E+08	7.470E+08
ZN-69	0.000E+00	0.000E+00	0.000E+00	0.000E+00	0.000E+00	0.000E+00	0.000E+00	0.000E+00
BR-83	4.870E+03	4.870E+03	4.870E+03	4.870E+03	4.870E+03	4.870E+03	7.080E+03	4.870E+03
BR-84	2.030E+05	2.030E+05	2.030E+05	2.030E+05	2.030E+05	2.030E+05	2.360E+05	2.030E+05
BR-85	0.000E+00	0.000E+00	0.000E+00	0.000E+00	0.000E+00	0.000E+00	0.000E+00	0.000E+00
RB-86	8.990E+06	8.990E+06	8.990E+06	8.990E+06	8.990E+06	8.990E+06	1.030E+07	8.990E+06
RB-88	3.310E+04	3.310E+04	3.310E+04	3.310E+04	3.310E+04	3.310E+04	3.780E+04	3.310E+04
RB-89	1.230E+05	1.230E+05	1.230E+05	1.230E+05	1.230E+05	1.230E+05	1.480E+05	1.230E+05
SR-89	2.160E+04	2.160E+04	2.160E+04	2.160E+04	2.160E+04	2.160E+04	2.510E+04	2.160E+04
SR-90	0.000E+00	0.000E+00	0.000E+00	0.000E+00	0.000E+00	0.000E+00	0.000E+00	0.000E+00
SR-91	2.150E+06	2.150E+06	2.150E+06	2.150E+06	2.150E+06	2.150E+06	2.510E+06	2.150E+06

APPENDIX G

R_i Adult Dose Factors for use in the Gaseous Dose Calculations

Agegroup:	ADULT	Pathway:	Ground Plane Deposition (GPD)			Units:	m^2·mrem/yr / mCi/sec	
Nuclide	**Bone**	**Liver**	**Thyroid**	**Kidney**	**Lung**	**Gilli**	**Skin**	**Total Body**
SR-92	7.770E+05	7.770E+05	7.770E+05	7.770E+05	7.770E+05	7.770E+05	8.630E+05	7.770E+05
Y-90	4.490E+03	4.490E+03	4.490E+03	4.490E+03	4.490E+03	4.490E+03	5.310E+03	4.490E+03
Y-91	1.070E+06	1.070E+06	1.070E+06	1.070E+06	1.070E+06	1.070E+06	1.210E+06	1.070E+06
Y-91M	1.000E+05	1.000E+05	1.000E+05	1.000E+05	1.000E+05	1.000E+05	1.160E+05	1.000E+05
Y-92	1.800E+05	1.800E+05	1.800E+05	1.800E+05	1.800E+05	1.800E+05	2.140E+05	1.800E+05
Y-93	1.830E+05	1.830E+05	1.830E+05	1.830E+05	1.830E+05	1.830E+05	2.510E+05	1.830E+05
ZR-95	2.450E+08	2.450E+08	2.450E+08	2.450E+08	2.450E+08	2.450E+08	2.840E+08	2.450E+08
ZR-97	2.960E+06	2.960E+06	2.960E+06	2.960E+06	2.960E+06	2.960E+06	3.440E+06	2.960E+06
NB-95	1.370E+08	1.370E+08	1.370E+08	1.370E+08	1.370E+08	1.370E+08	1.610E+08	1.370E+08
MO-99	3.990E+06	3.990E+06	3.990E+06	3.990E+06	3.990E+06	3.990E+06	4.630E+06	3.990E+06
TC-99M	1.840E+05	1.840E+05	1.840E+05	1.840E+05	1.840E+05	1.840E+05	2.110E+05	1.840E+05
TC-101	2.040E+04	2.040E+04	2.040E+04	2.040E+04	2.040E+04	2.040E+04	2.260E+04	2.040E+04
RU-103	1.080E+08	1.080E+08	1.080E+08	1.080E+08	1.080E+08	1.080E+08	1.260E+08	1.080E+08
RU-105	6.360E+05	6.360E+05	6.360E+05	6.360E+05	6.360E+05	6.360E+05	7.210E+05	6.360E+05
RU-106	4.220E+08	4.220E+08	4.220E+08	4.220E+08	4.220E+08	4.220E+08	5.070E+08	4.220E+08
AG-110M	3.440E+09	3.440E+09	3.440E+09	3.440E+09	3.440E+09	3.440E+09	4.010E+09	3.440E+09
TE-125M	1.550E+06	1.550E+06	1.550E+06	1.550E+06	1.550E+06	1.550E+06	2.130E+06	1.550E+06
TE-127	2.980E+03	2.980E+03	2.980E+03	2.980E+03	2.980E+03	2.980E+03	3.280E+03	2.980E+03
TE-127M	9.160E+04	9.160E+04	9.160E+04	9.160E+04	9.160E+04	9.160E+04	1.080E+05	9.160E+04
TE-129	2.620E+04	2.620E+04	2.620E+04	2.620E+04	2.620E+04	2.620E+04	3.100E+04	2.620E+04
TE-129M	1.980E+07	1.980E+07	1.980E+07	1.980E+07	1.980E+07	1.980E+07	2.310E+07	1.980E+07
TE-131	2.920E+04	2.920E+04	2.920E+04	2.920E+04	2.920E+04	2.920E+04	3.450E+07	2.920E+04
TE-131M	8.030E+06	8.030E+06	8.030E+06	8.030E+06	8.030E+06	8.030E+06	9.460E+06	8.030E+06
TE-132	4.230E+06	4.230E+06	4.230E+06	4.230E+06	4.230E+06	4.230E+06	4.980E+06	4.230E+06
I-130	5.510E+06	5.510E+06	5.510E+06	5.510E+06	5.510E+06	5.510E+06	6.690E+06	5.510E+06

APPENDIX G

R_i Adult Dose Factors for use in the Gaseous Dose Calculations

Agegroup:	ADULT	Pathway:	Ground Plane Deposition (GPD)			Units:	m^2·mrem/yr / mCi/sec	
Nuclide	**Bone**	**Liver**	**Thyroid**	**Kidney**	**Lung**	**Gilli**	**Skin**	**Total Body**
I-131	1.720E+07	1.720E+07	1.720E+07	1.720E+07	1.720E+07	1.720E+07	2.090E+07	1.720E+07
I-132	1.250E+06	1.250E+06	1.250E+06	1.250E+06	1.250E+06	1.250E+06	1.470E+06	1.250E+06
I-133	2.450E+06	2.450E+06	2.450E+06	2.450E+06	2.450E+06	2.450E+06	2.980E+06	2.450E+06
I-134	4.470E+05	4.470E+05	4.470E+05	4.470E+05	4.470E+05	4.470E+05	5.300E+05	4.470E+05
I-135	2.530E+06	2.530E+06	2.530E+06	2.530E+06	2.530E+06	2.530E+06	2.950E+06	2.530E+06
CS-134	6.860E+09	6.860E+09	6.860E+09	6.860E+09	6.860E+09	6.860E+09	8.000E+09	6.860E+09
CS-136	1.510E+08	1.510E+08	1.510E+08	1.510E+08	1.510E+08	1.510E+08	1.710E+08	1.510E+08
CS-137	1.030E+10	1.030E+10	1.030E+10	1.030E+10	1.030E+10	1.030E+10	1.200E+10	1.030E+10
CS-138	3.590E+05	3.590E+05	3.590E+05	3.590E+05	3.590E+05	3.590E+05	4.100E+05	3.590E+05
BA-139	1.060E+05	1.060E+05	1.060E+05	1.060E+05	1.060E+05	1.060E+05	1.190E+05	1.060E+05
BA-140	2.050E+07	2.050E+07	2.050E+07	2.050E+07	2.050E+07	2.050E+07	2.350E+07	2.050E+07
BA-141	4.170E+04	4.170E+04	4.170E+04	4.170E+04	4.170E+04	4.170E+04	4.750E+04	4.170E+04
BA-142	4.490E+04	4.490E+04	4.490E+04	4.490E+04	4.490E+04	4.490E+04	5.110E+04	4.490E+04
LA-140	1.920E+07	1.920E+07	1.920E+07	1.920E+07	1.920E+07	1.920E+07	2.180E+07	1.920E+07
LA-142	7.600E+05	7.600E+05	7.600E+05	7.600E+05	7.600E+05	7.600E+05	9.120E+05	7.600E+05
CE-141	1.370E+07	1.370E+07	1.370E+07	1.370E+07	1.370E+07	1.370E+07	1.540E+07	1.370E+07
CE-143	2.310E+06	2.310E+06	2.310E+06	2.310E+06	2.310E+06	2.310E+06	2.630E+06	2.310E+06
CE-144	6.950E+07	6.950E+07	6.950E+07	6.950E+07	6.950E+07	6.950E+07	8.040E+07	6.950E+07
PR-143	0.000E+00	0.000E+00	0.000E+00	0.000E+00	0.000E+00	0.000E+00	0.000E+00	0.000E+00
PR-144	1.830E+03	1.830E+03	1.830E+03	1.830E+03	1.830E+03	1.830E+03	2.110E+03	1.830E+03
ND-147	8.390E+06	8.390E+06	8.390E+06	8.390E+06	8.390E+06	8.390E+06	1.010E+07	8.390E+06
W-187	2.350E+06	2.350E+06	2.350E+06	2.350E+06	2.350E+06	2.350E+06	2.730E+06	2.350E+06
NP-239	1.710E+06	1.710E+06	1.710E+06	1.710E+06	1.710E+06	1.710E+06	1.980E+06	1.710E+06

APPENDIX H

R_i Teen Dose Factors for use in the Gaseous Dose Calculations

Agegroup:	TEEN	Pathway:	Grs/Cow/Milk (CMILK)			Units:	m^2·mrem/yr / mCi/sec; mrem/yr / mCi/m^3 (H-3)	
Nuclide	**Bone**	**Liver**	**Thyroid**	**Kidney**	**Lung**	**Gilli**	**Skin**	**Total Body**
H-3	0.000E+00	9.940E+02	9.940E+02	9.940E+02	9.940E+02	9.940E+02	0.000E+00	9.940E+02
C-14	4.860E+08	9.720E+07	9.720E+07	9.720E+07	9.720E+07	9.720E+07	0.000E+00	9.720E+07
NA-24	4.260E+06	4.260E+06	4.260E+06	4.260E+06	4.260E+06	4.260E+06	0.000E+00	4.260E+06
P-32	3.150E+10	1.950E+09	0.000E+00	0.000E+00	0.000E+00	2.650E+09	0.000E+00	1.220E+09
CR-51	0.000E+00	0.000E+00	2.770E+04	1.090E+04	7.130E+04	8.390E+06	0.000E+00	4.990E+04
MN-54	0.000E+00	1.400E+07	0.000E+00	4.180E+06	0.000E+00	2.870E+07	0.000E+00	2.780E+06
MN-56	0.000E+00	7.250E-03	0.000E+00	9.180E-03	0.000E+00	4.770E-01	0.000E+00	1.290E-03
FE-55	4.450E+07	3.160E+07	0.000E+00	0.000E+00	2.000E+07	1.370E+07	0.000E+00	7.360E+06
FE-59	5.180E+07	1.210E+08	0.000E+00	0.000E+00	3.810E+07	2.860E+08	0.000E+00	4.670E+07
CO-58	0.000E+00	7.940E+06	0.000E+00	0.000E+00	0.000E+00	1.090E+08	0.000E+00	1.830E+07
CO-60	0.000E+00	2.780E+07	0.000E+00	0.000E+00	0.000E+00	3.620E+08	0.000E+00	6.260E+07
NI-63	1.180E+10	8.350E+08	0.000E+00	0.000E+00	0.000E+00	1.330E+08	0.000E+00	4.010E+08
NI-65	6.770E-01	8.650E-02	0.000E+00	0.000E+00	0.000E+00	4.690E+00	0.000E+00	3.940E-02
CU-64	0.000E+00	4.250E+04	0.000E+00	1.070E+05	0.000E+00	3.290E+06	0.000E+00	2.000E+04
ZN-65	2.110E+09	7.320E+09	0.000E+00	4.680E+09	0.000E+00	3.100E+09	0.000E+00	3.410E+09
ZN-69	3.850E-12	7.330E-12	0.000E+00	4.790E-12	0.000E+00	1.350E-11	0.000E+00	5.130E-13
BR-83	0.000E+00	0.000E+00	0.000E+00	0.000E+00	0.000E+00	0.000E+00	0.000E+00	1.790E-01
BR-84	0.000E+00	0.000E+00	0.000E+00	0.000E+00	0.000E+00	0.000E+00	0.000E+00	2.880E-23
BR-85	0.000E+00	0.000E+00	0.000E+00	0.000E+00	0.000E+00	0.000E+00	0.000E+00	0.000E+00
RB-86	0.000E+00	4.730E+09	0.000E+00	0.000E+00	0.000E+00	7.000E+08	0.000E+00	2.220E+09
RB-88	0.000E+00	3.890E-45	0.000E+00	0.000E+00	0.000E+00	3.330E-52	0.000E+00	2.070E-45
RB-89	0.000E+00	7.660E-53	0.000E+00	0.000E+00	0.000E+00	1.170E-61	0.000E+00	5.420E-53
SR-89	2.670E+09	0.000E+00	0.000E+00	0.000E+00	0.000E+00	3.190E+08	0.000E+00	7.660E+07
SR-90	6.610E+10	0.000E+00	0.000E+00	0.000E+00	0.000E+00	1.860E+09	0.000E+00	1.630E+10
SR-91	5.310E+04	0.000E+00	0.000E+00	0.000E+00	0.000E+00	2.410E+05	0.000E+00	2.110E+03

APPENDIX H

R_i Teen Dose Factors for use in the Gaseous Dose Calculations

Agegroup:	TEEN	Pathway:	Grs/Cow/Milk (CMILK)			Units:	m^2·mrem/yr / mCi/sec; mrem/yr / mCi/m^3 (H-3)	
Nuclide	**Bone**	**Liver**	**Thyroid**	**Kidney**	**Lung**	**Gilli**	**Skin**	**Total Body**
SR-92	8.940E-01	0.000E+00	0.000E+00	0.000E+00	0.000E+00	2.280E+01	0.000E+00	3.810E-02
Y-90	1.300E+02	0.000E+00	0.000E+00	0.000E+00	0.000E+00	1.070E+06	0.000E+00	3.510E+00
Y-91	1.580E+04	0.000E+00	0.000E+00	0.000E+00	0.000E+00	6.480E+06	0.000E+00	4.240E+02
Y-91M	1.090E-19	0.000E+00	0.000E+00	0.000E+00	0.000E+00	5.170E-18	0.000E+00	4.180E-21
Y-92	1.030E-04	0.000E+00	0.000E+00	0.000E+00	0.000E+00	2.830E+00	0.000E+00	2.980E-06
Y-93	4.120E-01	0.000E+00	0.000E+00	0.000E+00	0.000E+00	1.260E+04	0.000E+00	1.130E-02
ZR-95	1.650E+03	5.200E+02	0.000E+00	7.650E+02	0.000E+00	1.200E+06	0.000E+00	3.580E+02
ZR-97	7.880E-01	1.560E-01	0.000E+00	2.370E-01	0.000E+00	4.220E+04	0.000E+00	7.190E-02
NB-95	1.410E+05	7.810E+04	0.000E+00	7.570E+04	0.000E+00	3.340E+08	0.000E+00	4.300E+04
MO-99	0.000E+00	4.470E+07	0.000E+00	1.020E+08	0.000E+00	8.010E+07	0.000E+00	8.530E+06
TC-99M	5.760E+00	1.610E+01	0.000E+00	2.390E+02	8.920E+00	1.050E+04	0.000E+00	2.080E+02
TC-101	4.740E-60	6.750E-60	0.000E+00	1.220E-58	4.110E-60	1.150E-66	0.000E+00	6.630E-59
RU-103	1.810E+03	0.000E+00	0.000E+00	6.380E+03	0.000E+00	1.510E+05	0.000E+00	7.740E+02
RU-105	1.560E-03	0.000E+00	0.000E+00	1.970E-02	0.000E+00	1.260E+00	0.000E+00	6.070E-04
RU-106	3.750E+04	0.000E+00	0.000E+00	7.240E+04	0.000E+00	1.800E+06	0.000E+00	4.730E+03
AG-110M	9.630E+07	9.110E+07	0.000E+00	1.740E+08	0.000E+00	2.560E+10	0.000E+00	5.540E+07
TE-125M	3.000E+07	1.080E+07	8.390E+06	0.000E+00	0.000E+00	8.860E+07	0.000E+00	4.020E+06
TE-127	1.210E+03	4.290E+02	8.350E+02	4.900E+03	0.000E+00	9.340E+04	0.000E+00	2.600E+02
TE-127M	8.440E+07	2.990E+07	2.010E+07	3.420E+08	0.000E+00	2.100E+08	0.000E+00	1.000E+07
TE-129	5.200E-10	1.940E-10	3.720E-10	2.180E-09	0.000E+00	2.840E-09	0.000E+00	1.270E-10
TE-129M	1.100E+08	4.090E+07	3.550E+07	4.610E+08	0.000E+00	4.130E+08	0.000E+00	1.740E+07
TE-131	6.580E-33	2.710E-33	5.070E-33	2.880E-32	0.000E+00	5.400E-34	0.000E+00	2.060E-33
TE-131M	6.570E+05	3.150E+05	4.740E+05	3.290E+06	0.000E+00	2.530E+07	0.000E+00	2.630E+05
TE-132	4.290E+06	2.720E+06	2.870E+06	2.610E+07	0.000E+00	8.610E+07	0.000E+00	2.560E+06
I-130	7.380E+05	2.140E+06	1.740E+08	3.290E+06	0.000E+00	1.640E+06	0.000E+00	8.530E+05

APPENDIX H

R_i Teen Dose Factors for use in the Gaseous Dose Calculations

Agegroup:	TEEN	Pathway:	Grs/Cow/Milk (CMILK)			Units:	m^2·mrem/yr / mCi/sec; mrem/yr / mCi/m^3 (H-3)	
Nuclide	**Bone**	**Liver**	**Thyroid**	**Kidney**	**Lung**	**Gilli**	**Skin**	**Total Body**
I-131	5.370E+08	7.520E+08	2.190E+11	1.290E+09	0.000E+00	1.490E+08	0.000E+00	4.040E+08
I-132	2.910E-01	7.620E-01	2.570E+01	1.200E+00	0.000E+00	3.320E-01	0.000E+00	2.740E-01
I-133	7.070E+06	1.200E+07	1.670E+09	2.100E+07	0.000E+00	9.070E+06	0.000E+00	3.660E+06
I-134	3.580E-12	9.500E-12	1.580E-10	1.500E-11	0.000E+00	1.250E-13	0.000E+00	3.410E-12
I-135	2.280E+04	5.870E+04	3.780E+06	9.270E+04	0.000E+00	6.510E+04	0.000E+00	2.180E+04
CS-134	9.820E+09	2.310E+10	0.000E+00	7.340E+09	2.800E+09	2.870E+08	0.000E+00	1.070E+10
CS-136	4.480E+08	1.760E+09	0.000E+00	9.600E+08	1.510E+08	1.420E+08	0.000E+00	1.180E+09
CS-137	1.340E+10	1.780E+10	0.000E+00	6.060E+09	2.350E+09	2.530E+08	0.000E+00	6.200E+09
CS-138	1.640E-23	3.150E-23	0.000E+00	2.330E-23	2.710E-24	1.430E-26	0.000E+00	1.580E-23
BA-139	8.170E-08	5.750E-11	0.000E+00	5.420E-11	3.960E-11	7.290E-07	0.000E+00	2.380E-09
BA-140	4.850E+07	5.950E+04	0.000E+00	2.020E+04	4.000E+04	7.480E+07	0.000E+00	3.130E+06
BA-141	7.520E-46	5.620E-49	0.000E+00	5.210E-49	3.850E-49	1.600E-51	0.000E+00	2.510E-47
BA-142	4.790E-80	4.790E-83	0.000E+00	4.050E-83	3.190E-83	1.470E-91	0.000E+00	2.950E-81
LA-140	8.100E+00	3.980E+00	0.000E+00	0.000E+00	0.000E+00	2.290E+05	0.000E+00	1.060E+00
LA-142	3.360E-11	1.490E-11	0.000E+00	0.000E+00	0.000E+00	4.540E-07	0.000E+00	3.710E-12
CE-141	8.880E+03	5.930E+03	0.000E+00	2.790E+03	0.000E+00	1.700E+07	0.000E+00	6.810E+02
CE-143	7.640E+01	5.560E+04	0.000E+00	2.490E+01	0.000E+00	1.670E+06	0.000E+00	6.210E+00
CE-144	6.580E+05	2.720E+05	0.000E+00	1.630E+05	0.000E+00	1.660E+08	0.000E+00	3.540E+04
PR-143	2.900E+02	1.160E+02	0.000E+00	6.730E+01	0.000E+00	9.540E+05	0.000E+00	1.440E+01
PR-144	1.080E-53	4.430E-54	0.000E+00	2.540E-54	0.000E+00	1.190E-56	0.000E+00	5.490E-55
ND-147	1.810E+02	1.970E+02	0.000E+00	1.160E+02	0.000E+00	7.110E+05	0.000E+00	1.180E+01
W-187	1.190E+04	9.710E+03	0.000E+00	0.000E+00	0.000E+00	2.630E+06	0.000E+00	3.400E+03
NP-239	7.010E+00	6.610E-01	0.000E+00	2.070E+00	0.000E+00	1.060E+05	0.000E+00	3.670E-01

APPENDIX H

R_i Teen Dose Factors for use in the Gaseous Dose Calculations

Agegroup:	TEEN	Pathway:	Grs/Goat/Milk (GMILK)			Units:	m^2·mrem/yr / mCi/sec; mrem/yr / mCi/m^3 (H-3)	
Nuclide	**Bone**	**Liver**	**Thyroid**	**Kidney**	**Lung**	**Gilli**	**Skin**	**Total Body**
H-3	0.000E+00	2.030E+03	2.030E+03	2.030E+03	2.030E+03	2.030E+03	0.000E+00	2.030E+03
C-14	4.860E+08	9.720E+07	9.720E+07	9.720E+07	9.720E+07	9.720E+07	0.000E+00	9.720E+07
NA-24	5.110E+05	5.110E+05	5.110E+05	5.110E+05	5.110E+05	5.110E+05	0.000E+00	5.110E+05
P-32	3.780E+10	2.340E+09	0.000E+00	0.000E+00	0.000E+00	3.180E+09	0.000E+00	1.470E+09
CR-51	0.000E+00	0.000E+00	3.330E+03	1.310E+03	8.550E+03	1.010E+06	0.000E+00	5.990E+03
MN-54	0.000E+00	1.680E+06	0.000E+00	5.020E+05	0.000E+00	3.450E+06	0.000E+00	3.340E+05
MN-56	0.000E+00	8.700E-04	0.000E+00	1.100E-03	0.000E+00	5.730E-02	0.000E+00	1.550E-04
FE-55	5.790E+05	4.110E+05	0.000E+00	0.000E+00	2.600E+05	1.780E+05	0.000E+00	9.570E+04
FE-59	6.740E+05	1.570E+06	0.000E+00	0.000E+00	4.960E+05	3.720E+06	0.000E+00	6.070E+05
CO-58	0.000E+00	9.520E+05	0.000E+00	0.000E+00	0.000E+00	1.310E+07	0.000E+00	2.190E+06
CO-60	0.000E+00	3.340E+06	0.000E+00	0.000E+00	0.000E+00	4.350E+07	0.000E+00	7.520E+06
NI-63	1.420E+09	1.000E+08	0.000E+00	0.000E+00	0.000E+00	1.590E+07	0.000E+00	4.810E+07
NI-65	8.120E-02	1.040E-02	0.000E+00	0.000E+00	0.000E+00	5.630E-01	0.000E+00	4.730E-03
CU-64	0.000E+00	4.730E+03	0.000E+00	1.200E+04	0.000E+00	3.670E+05	0.000E+00	2.230E+03
ZN-65	2.530E+08	8.780E+08	0.000E+00	5.620E+08	0.000E+00	3.720E+08	0.000E+00	4.100E+08
ZN-69	4.620E-13	8.800E-13	0.000E+00	5.750E-13	0.000E+00	1.620E-12	0.000E+00	6.160E-14
BR-83	0.000E+00	0.000E+00	0.000E+00	0.000E+00	0.000E+00	0.000E+00	0.000E+00	2.150E-02
BR-84	0.000E+00	0.000E+00	0.000E+00	0.000E+00	0.000E+00	0.000E+00	0.000E+00	3.450E-24
BR-85	0.000E+00	0.000E+00	0.000E+00	0.000E+00	0.000E+00	0.000E+00	0.000E+00	0.000E+00
RB-86	0.000E+00	5.670E+08	0.000E+00	0.000E+00	0.000E+00	8.400E+07	0.000E+00	2.670E+08
RB-88	0.000E+00	4.670E-46	0.000E+00	0.000E+00	0.000E+00	4.000E-53	0.000E+00	2.490E-46
RB-89	0.000E+00	9.190E-54	0.000E+00	0.000E+00	0.000E+00	1.410E-62	0.000E+00	6.500E-54
SR-89	5.620E+09	0.000E+00	0.000E+00	0.000E+00	0.000E+00	6.690E+08	0.000E+00	1.610E+08
SR-90	1.390E+11	0.000E+00	0.000E+00	0.000E+00	0.000E+00	3.900E+09	0.000E+00	3.430E+10
SR-91	1.120E+05	0.000E+00	0.000E+00	0.000E+00	0.000E+00	5.060E+05	0.000E+00	4.440E+03

APPENDIX H

R_i Teen Dose Factors for use in the Gaseous Dose Calculations

Agegroup:	TEEN	Pathway:	Grs/Goat/Milk (GMILK)			Units:	m^2·mrem/yr / mCi/sec; mrem/yr / mCi/m^3 (H-3)	
Nuclide	**Bone**	**Liver**	**Thyroid**	**Kidney**	**Lung**	**Gilli**	**Skin**	**Total Body**
SR-92	1.880E+00	0.000E+00	0.000E+00	0.000E+00	0.000E+00	4.780E+01	0.000E+00	8.000E-02
Y-90	1.560E+01	0.000E+00	0.000E+00	0.000E+00	0.000E+00	1.290E+05	0.000E+00	4.210E-01
Y-91	1.900E+03	0.000E+00	0.000E+00	0.000E+00	0.000E+00	7.770E+05	0.000E+00	5.080E+01
Y-91M	1.310E-20	0.000E+00	0.000E+00	0.000E+00	0.000E+00	6.200E-19	0.000E+00	5.020E-22
Y-92	1.240E-05	0.000E+00	0.000E+00	0.000E+00	0.000E+00	3.390E-01	0.000E+00	3.580E-07
Y-93	4.940E-02	0.000E+00	0.000E+00	0.000E+00	0.000E+00	1.510E+03	0.000E+00	1.360E-03
ZR-95	1.980E+02	6.250E+01	0.000E+00	9.180E+01	0.000E+00	1.440E+05	0.000E+00	4.300E+01
ZR-97	9.460E-02	1.870E-02	0.000E+00	2.840E-02	0.000E+00	5.070E+03	0.000E+00	8.620E-03
NB-95	1.690E+04	9.370E+03	0.000E+00	9.080E+03	0.000E+00	4.010E+07	0.000E+00	5.160E+03
MO-99	0.000E+00	5.370E+06	0.000E+00	1.230E+07	0.000E+00	9.610E+06	0.000E+00	1.020E+06
TC-99M	6.910E-01	1.930E+00	0.000E+00	2.870E+01	1.070E+00	1.270E+03	0.000E+00	2.500E+01
TC-101	5.690E-61	8.100E-61	0.000E+00	1.460E-59	4.930E-61	1.380E-67	0.000E+00	7.950E-60
RU-103	2.170E+02	0.000E+00	0.000E+00	7.660E+02	0.000E+00	1.810E+04	0.000E+00	9.290E+01
RU-105	1.880E-04	0.000E+00	0.000E+00	2.370E-03	0.000E+00	1.520E-01	0.000E+00	7.290E-05
RU-106	4.500E+03	0.000E+00	0.000E+00	8.680E+03	0.000E+00	2.160E+05	0.000E+00	5.670E+02
AG-110M	1.160E+07	1.090E+07	0.000E+00	2.080E+07	0.000E+00	3.070E+09	0.000E+00	6.650E+06
TE-125M	3.600E+06	1.300E+06	1.010E+06	0.000E+00	0.000E+00	1.060E+07	0.000E+00	4.820E+05
TE-127	1.450E+02	5.150E+01	1.000E+02	5.880E+02	0.000E+00	1.120E+04	0.000E+00	3.120E+01
TE-127M	1.010E+07	3.590E+06	2.410E+06	4.100E+07	0.000E+00	2.520E+07	0.000E+00	1.200E+06
TE-129	6.240E-11	2.330E-11	4.460E-11	2.620E-10	0.000E+00	3.410E-10	0.000E+00	1.520E-11
TE-129M	1.320E+07	4.900E+06	4.260E+06	5.530E+07	0.000E+00	4.960E+07	0.000E+00	2.090E+06
TE-131	7.900E-34	3.260E-34	6.090E-34	3.450E-33	0.000E+00	6.480E-35	0.000E+00	2.470E-34
TE-131M	7.880E+04	3.780E+04	5.690E+04	3.940E+05	0.000E+00	3.030E+06	0.000E+00	3.150E+04
TE-132	5.150E+05	3.260E+05	3.440E+05	3.130E+06	0.000E+00	1.030E+07	0.000E+00	3.070E+05
I-130	8.860E+05	2.560E+06	2.090E+08	3.950E+06	0.000E+00	1.970E+06	0.000E+00	1.020E+06

APPENDIX H

R_i Teen Dose Factors for use in the Gaseous Dose Calculations

Agegroup:	TEEN	Pathway:	Grs/Goat/Milk (GMILK)			Units:	m^2·mrem/yr / mCi/sec; mrem/yr / mCi/m^3 (H-3)	
Nuclide	**Bone**	**Liver**	**Thyroid**	**Kidney**	**Lung**	**Gilli**	**Skin**	**Total Body**
I-131	6.450E+08	9.030E+08	2.630E+11	1.550E+09	0.000E+00	1.790E+08	0.000E+00	4.850E+08
I-132	3.500E-01	9.150E-01	3.080E+01	1.440E+00	0.000E+00	3.980E-01	0.000E+00	3.280E-01
I-133	8.480E+06	1.440E+07	2.010E+09	2.520E+07	0.000E+00	1.090E+07	0.000E+00	4.390E+06
I-134	4.300E-12	1.140E-11	1.900E-10	1.800E-11	0.000E+00	1.500E-13	0.000E+00	4.090E-12
I-135	2.740E+04	7.040E+04	4.530E+06	1.110E+05	0.000E+00	7.810E+04	0.000E+00	2.610E+04
CS-134	2.940E+10	6.930E+10	0.000E+00	2.200E+10	8.410E+09	8.620E+08	0.000E+00	3.220E+10
CS-136	1.340E+09	5.290E+09	0.000E+00	2.880E+09	4.540E+08	4.260E+08	0.000E+00	3.550E+09
CS-137	4.020E+10	5.340E+10	0.000E+00	1.820E+10	7.060E+09	7.600E+08	0.000E+00	1.860E+10
CS-138	4.920E-23	9.450E-23	0.000E+00	6.980E-23	8.120E-24	4.290E-26	0.000E+00	4.730E-23
BA-139	9.800E-09	6.900E-12	0.000E+00	6.500E-12	4.750E-12	8.750E-08	0.000E+00	2.860E-10
BA-140	5.820E+06	7.130E+03	0.000E+00	2.420E+03	4.800E+03	8.980E+06	0.000E+00	3.750E+05
BA-141	9.030E-47	6.740E-50	0.000E+00	6.260E-50	4.610E-50	1.920E-52	0.000E+00	3.010E-48
BA-142	5.750E-81	5.750E-84	0.000E+00	4.860E-84	3.820E-84	1.760E-92	0.000E+00	3.540E-82
LA-140	9.720E-01	4.780E-01	0.000E+00	0.000E+00	0.000E+00	2.740E+04	0.000E+00	1.270E-01
LA-142	4.030E-12	1.790E-12	0.000E+00	0.000E+00	0.000E+00	5.440E-08	0.000E+00	4.450E-13
CE-141	1.070E+03	7.120E+02	0.000E+00	3.350E+02	0.000E+00	2.040E+06	0.000E+00	8.170E+01
CE-143	9.170E+00	6.670E+03	0.000E+00	2.990E+00	0.000E+00	2.000E+05	0.000E+00	7.450E-01
CE-144	7.900E+04	3.270E+04	0.000E+00	1.950E+04	0.000E+00	1.990E+07	0.000E+00	4.240E+03
PR-143	3.480E+01	1.390E+01	0.000E+00	8.080E+00	0.000E+00	1.150E+05	0.000E+00	1.730E+00
PR-144	1.300E-54	5.320E-55	0.000E+00	3.050E-55	0.000E+00	1.430E-57	0.000E+00	6.590E-56
ND-147	2.170E+01	2.360E+01	0.000E+00	1.390E+01	0.000E+00	8.530E+04	0.000E+00	1.420E+00
W-187	1.430E+03	1.170E+03	0.000E+00	0.000E+00	0.000E+00	3.150E+05	0.000E+00	4.080E+02
NP-239	8.410E-01	7.930E-02	0.000E+00	2.490E-01	0.000E+00	1.280E+04	0.000E+00	4.410E-02

APPENDIX H

R_i Teen Dose Factors for use in the Gaseous Dose Calculations

Agegroup:	TEEN	Pathway:	Grs/Cow/Meat (CMEAT)			Units:	m^2·mrem/yr / mCi/sec; mrem/yr / mCi/m^3 (H-3)	
Nuclide	**Bone**	**Liver**	**Thyroid**	**Kidney**	**Lung**	**Gilli**	**Skin**	**Total Body**
H-3	0.000E+00	1.940E+02	1.940E+02	1.940E+02	1.940E+02	1.940E+02	0.000E+00	1.940E+02
C-14	2.040E+08	4.080E+07	4.080E+07	4.080E+07	4.080E+07	4.080E+07	0.000E+00	4.080E+07
NA-24	1.080E-03	1.080E-03	1.080E-03	1.080E-03	1.080E-03	1.080E-03	0.000E+00	1.080E-03
P-32	3.930E+09	2.440E+08	0.000E+00	0.000E+00	0.000E+00	3.310E+08	0.000E+00	1.530E+08
CR-51	0.000E+00	0.000E+00	3.130E+03	1.240E+03	8.050E+03	9.470E+05	0.000E+00	5.640E+03
MN-54	0.000E+00	7.000E+06	0.000E+00	2.090E+06	0.000E+00	1.440E+07	0.000E+00	1.390E+06
MN-56	0.000E+00	1.070E-53	0.000E+00	1.360E-53	0.000E+00	7.070E-52	0.000E+00	1.910E-54
FE-55	2.380E+08	1.690E+08	0.000E+00	0.000E+00	1.070E+08	7.310E+07	0.000E+00	3.940E+07
FE-59	2.120E+08	4.950E+08	0.000E+00	0.000E+00	1.560E+08	1.170E+09	0.000E+00	1.910E+08
CO-58	0.000E+00	1.410E+07	0.000E+00	0.000E+00	0.000E+00	1.940E+08	0.000E+00	3.240E+07
CO-60	0.000E+00	5.830E+07	0.000E+00	0.000E+00	0.000E+00	7.600E+08	0.000E+00	1.310E+08
NI-63	1.520E+10	1.070E+09	0.000E+00	0.000E+00	0.000E+00	1.710E+08	0.000E+00	5.150E+08
NI-65	1.880E-52	2.410E-53	0.000E+00	0.000E+00	0.000E+00	1.300E-51	0.000E+00	1.100E-53
CU-64	0.000E+00	2.210E-07	0.000E+00	5.600E-07	0.000E+00	1.720E-05	0.000E+00	1.040E-07
ZN-65	2.500E+08	8.690E+08	0.000E+00	5.560E+08	0.000E+00	3.680E+08	0.000E+00	4.050E+08
ZN-69	0.000E+00	0.000E+00	0.000E+00	0.000E+00	0.000E+00	0.000E+00	0.000E+00	0.000E+00
BR-83	0.000E+00	0.000E+00	0.000E+00	0.000E+00	0.000E+00	0.000E+00	0.000E+00	5.070E-57
BR-84	0.000E+00	0.000E+00	0.000E+00	0.000E+00	0.000E+00	0.000E+00	0.000E+00	0.000E+00
BR-85	0.000E+00	0.000E+00	0.000E+00	0.000E+00	0.000E+00	0.000E+00	0.000E+00	0.000E+00
RB-86	0.000E+00	4.070E+08	0.000E+00	0.000E+00	0.000E+00	6.020E+07	0.000E+00	1.910E+08
RB-88	0.000E+00	0.000E+00	0.000E+00	0.000E+00	0.000E+00	0.000E+00	0.000E+00	0.000E+00
RB-89	0.000E+00	0.000E+00	0.000E+00	0.000E+00	0.000E+00	0.000E+00	0.000E+00	0.000E+00
SR-89	2.550E+08	0.000E+00	0.000E+00	0.000E+00	0.000E+00	3.030E+07	0.000E+00	7.290E+06
SR-90	8.050E+09	0.000E+00	0.000E+00	0.000E+00	0.000E+00	2.260E+08	0.000E+00	1.990E+09
SR-91	1.280E-10	0.000E+00	0.000E+00	0.000E+00	0.000E+00	5.800E-10	0.000E+00	5.090E-12

APPENDIX H

R_i Teen Dose Factors for use in the Gaseous Dose Calculations

Agegroup:	TEEN	Pathway:	Grs/Cow/Meat (CMEAT)			Units:	m^2·mrem/yr / mCi/sec; mrem/yr / mCi/m^3 (H-3)	
Nuclide	**Bone**	**Liver**	**Thyroid**	**Kidney**	**Lung**	**Gilli**	**Skin**	**Total Body**
SR-92	9.880E-50	0.000E+00	0.000E+00	0.000E+00	0.000E+00	2.520E-48	0.000E+00	4.210E-51
Y-90	9.060E+01	0.000E+00	0.000E+00	0.000E+00	0.000E+00	7.470E+05	0.000E+00	2.440E+00
Y-91	9.540E+05	0.000E+00	0.000E+00	0.000E+00	0.000E+00	3.910E+08	0.000E+00	2.560E+04
Y-91M	0.000E+00	0.000E+00	0.000E+00	0.000E+00	0.000E+00	0.000E+00	0.000E+00	0.000E+00
Y-92	1.280E-39	0.000E+00	0.000E+00	0.000E+00	0.000E+00	3.520E-35	0.000E+00	3.710E-41
Y-93	3.960E-12	0.000E+00	0.000E+00	0.000E+00	0.000E+00	1.210E-07	0.000E+00	1.090E-13
ZR-95	1.500E+06	4.730E+05	0.000E+00	6.950E+05	0.000E+00	1.090E+09	0.000E+00	3.250E+05
ZR-97	1.720E-05	3.410E-06	0.000E+00	5.170E-06	0.000E+00	9.230E-01	0.000E+00	1.570E-06
NB-95	1.790E+06	9.950E+05	0.000E+00	9.650E+05	0.000E+00	4.260E+09	0.000E+00	5.480E+05
MO-99	0.000E+00	8.270E+04	0.000E+00	1.890E+05	0.000E+00	1.480E+05	0.000E+00	1.580E+04
TC-99M	3.530E-21	9.850E-21	0.000E+00	1.470E-19	5.470E-21	6.470E-18	0.000E+00	1.280E-19
TC-101	0.000E+00	0.000E+00	0.000E+00	0.000E+00	0.000E+00	0.000E+00	0.000E+00	0.000E+00
RU-103	8.570E+07	0.000E+00	0.000E+00	3.020E+08	0.000E+00	7.160E+09	0.000E+00	3.660E+07
RU-105	4.830E-28	0.000E+00	0.000E+00	6.090E-27	0.000E+00	3.900E-25	0.000E+00	1.880E-28
RU-106	2.360E+09	0.000E+00	0.000E+00	4.550E+09	0.000E+00	1.130E+11	0.000E+00	2.970E+08
AG-110M	5.060E+06	4.790E+06	0.000E+00	9.130E+06	0.000E+00	1.340E+09	0.000E+00	2.910E+06
TE-125M	3.030E+08	1.090E+08	8.470E+07	0.000E+00	0.000E+00	8.940E+08	0.000E+00	4.050E+07
TE-127	1.800E-10	6.380E-11	1.240E-10	7.290E-10	0.000E+00	1.390E-08	0.000E+00	3.870E-11
TE-127M	9.410E+08	3.340E+08	2.240E+08	3.820E+09	0.000E+00	2.350E+09	0.000E+00	1.120E+08
TE-129	0.000E+00	0.000E+00	0.000E+00	0.000E+00	0.000E+00	0.000E+00	0.000E+00	0.000E+00
TE-129M	9.500E+08	3.530E+08	3.070E+08	3.970E+09	0.000E+00	3.570E+09	0.000E+00	1.500E+08
TE-131	0.000E+00	0.000E+00	0.000E+00	0.000E+00	0.000E+00	0.000E+00	0.000E+00	0.000E+00
TE-131M	3.760E+02	1.800E+02	2.710E+02	1.880E+03	0.000E+00	1.450E+04	0.000E+00	1.500E+02
TE-132	1.160E+06	7.360E+05	7.750E+05	7.060E+06	0.000E+00	2.330E+07	0.000E+00	6.920E+05
I-130	1.700E-06	4.910E-06	4.000E-04	7.560E-06	0.000E+00	3.770E-06	0.000E+00	1.960E-06

APPENDIX H

R_i Teen Dose Factors for use in the Gaseous Dose Calculations

Agegroup:	TEEN	Pathway:	Grs/Cow/Meat (CMEAT)			Units:	m^2·mrem/yr / mCi/sec; mrem/yr / mCi/m^3 (H-3)	
Nuclide	**Bone**	**Liver**	**Thyroid**	**Kidney**	**Lung**	**Gilli**	**Skin**	**Total Body**
I-131	8.920E+06	1.250E+07	3.650E+09	2.150E+07	0.000E+00	2.470E+06	0.000E+00	6.710E+06
I-132	5.660E-59	1.480E-58	4.990E-57	2.330E-58	0.000E+00	6.450E-59	0.000E+00	5.320E-59
I-133	3.050E-01	5.180E-01	7.230E+01	9.090E-01	0.000E+00	3.920E-01	0.000E+00	1.580E-01
I-134	0.000E+00	0.000E+00	0.000E+00	0.000E+00	0.000E+00	0.000E+00	0.000E+00	0.000E+00
I-135	3.600E-17	9.260E-17	5.960E-15	1.460E-16	0.000E+00	1.030E-16	0.000E+00	3.430E-17
CS-134	5.230E+08	1.230E+09	0.000E+00	3.910E+08	1.490E+08	1.530E+07	0.000E+00	5.710E+08
CS-136	9.400E+06	3.700E+07	0.000E+00	2.010E+07	3.170E+06	2.980E+06	0.000E+00	2.480E+07
CS-137	7.240E+08	9.630E+08	0.000E+00	3.280E+08	1.270E+08	1.370E+07	0.000E+00	3.360E+08
CS-138	0.000E+00	0.000E+00	0.000E+00	0.000E+00	0.000E+00	0.000E+00	0.000E+00	0.000E+00
BA-139	0.000E+00	0.000E+00	0.000E+00	0.000E+00	0.000E+00	0.000E+00	0.000E+00	0.000E+00
BA-140	2.380E+07	2.910E+04	0.000E+00	9.870E+03	1.960E+04	3.660E+07	0.000E+00	1.530E+06
BA-141	0.000E+00	0.000E+00	0.000E+00	0.000E+00	0.000E+00	0.000E+00	0.000E+00	0.000E+00
BA-142	0.000E+00	0.000E+00	0.000E+00	0.000E+00	0.000E+00	0.000E+00	0.000E+00	0.000E+00
LA-140	3.050E-02	1.500E-02	0.000E+00	0.000E+00	0.000E+00	8.610E+02	0.000E+00	3.990E-03
LA-142	2.870E-92	1.280E-92	0.000E+00	0.000E+00	0.000E+00	3.880E-88	0.000E+00	3.180E-93
CE-141	1.180E+04	7.870E+03	0.000E+00	3.710E+03	0.000E+00	2.250E+07	0.000E+00	9.040E+02
CE-143	1.690E-02	1.230E+01	0.000E+00	5.510E-03	0.000E+00	3.690E+02	0.000E+00	1.370E-03
CE-144	1.230E+06	5.080E+05	0.000E+00	3.040E+05	0.000E+00	3.090E+08	0.000E+00	6.600E+04
PR-143	1.760E+04	7.040E+03	0.000E+00	4.090E+03	0.000E+00	5.800E+07	0.000E+00	8.780E+02
PR-144	0.000E+00	0.000E+00	0.000E+00	0.000E+00	0.000E+00	0.000E+00	0.000E+00	0.000E+00
ND-147	6.230E+03	6.770E+03	0.000E+00	3.980E+03	0.000E+00	2.440E+07	0.000E+00	4.060E+02
W-187	1.730E-02	1.410E-02	0.000E+00	0.000E+00	0.000E+00	3.820E+00	0.000E+00	4.940E-03
NP-239	2.260E-01	2.140E-02	0.000E+00	6.700E-02	0.000E+00	3.440E+03	0.000E+00	1.190E-02

APPENDIX H

R_i Teen Dose Factors for use in the Gaseous Dose Calculations

Agegroup:	TEEN	Pathway:	Vegetation (VEG)			Units:	m^2·mrem/yr / mCi/sec; mrem/yr / mCi/m^3 (H-3)	
Nuclide	**Bone**	**Liver**	**Thyroid**	**Kidney**	**Lung**	**Gilli**	**Skin**	**Total Body**
H-3	0.000E+00	2.590E+03	2.590E+03	2.590E+03	2.590E+03	2.590E+03	0.000E+00	2.590E+03
C-14	3.690E+08	7.380E+07	7.380E+07	7.380E+07	7.380E+07	7.380E+07	0.000E+00	7.380E+07
NA-24	2.390E+05	2.390E+05	2.390E+05	2.390E+05	2.390E+05	2.390E+05	0.000E+00	2.390E+05
P-32	1.610E+09	9.970E+07	0.000E+00	0.000E+00	0.000E+00	1.350E+08	0.000E+00	6.240E+07
CR-51	0.000E+00	0.000E+00	3.430E+04	1.350E+04	8.810E+04	1.040E+07	0.000E+00	6.170E+04
MN-54	0.000E+00	4.540E+08	0.000E+00	1.360E+08	0.000E+00	9.320E+08	0.000E+00	9.010E+07
MN-56	0.000E+00	1.420E+01	0.000E+00	1.800E+01	0.000E+00	9.360E+02	0.000E+00	2.530E+00
FE-55	3.260E+08	2.310E+08	0.000E+00	0.000E+00	1.470E+08	1.000E+08	0.000E+00	5.390E+07
FE-59	1.790E+08	4.190E+08	0.000E+00	0.000E+00	1.320E+08	9.900E+08	0.000E+00	1.620E+08
CO-58	0.000E+00	4.360E+07	0.000E+00	0.000E+00	0.000E+00	6.010E+08	0.000E+00	1.000E+08
CO-60	0.000E+00	2.490E+08	0.000E+00	0.000E+00	0.000E+00	3.240E+09	0.000E+00	5.600E+08
NI-63	1.610E+10	1.130E+09	0.000E+00	0.000E+00	0.000E+00	1.810E+08	0.000E+00	5.450E+08
NI-65	5.720E+01	7.310E+00	0.000E+00	0.000E+00	0.000E+00	3.970E+02	0.000E+00	3.330E+00
CU-64	0.000E+00	8.340E+03	0.000E+00	2.110E+04	0.000E+00	6.470E+05	0.000E+00	3.920E+03
ZN-65	4.240E+08	1.470E+09	0.000E+00	9.420E+08	0.000E+00	6.230E+08	0.000E+00	6.870E+08
ZN-69	5.140E-06	9.800E-06	0.000E+00	6.400E-06	0.000E+00	1.810E-05	0.000E+00	6.860E-07
BR-83	0.000E+00	0.000E+00	0.000E+00	0.000E+00	0.000E+00	0.000E+00	0.000E+00	2.910E+00
BR-84	0.000E+00	0.000E+00	0.000E+00	0.000E+00	0.000E+00	0.000E+00	0.000E+00	2.250E-11
BR-85	0.000E+00	0.000E+00	0.000E+00	0.000E+00	0.000E+00	0.000E+00	0.000E+00	0.000E+00
RB-86	0.000E+00	2.740E+08	0.000E+00	0.000E+00	0.000E+00	4.050E+07	0.000E+00	1.290E+08
RB-88	0.000E+00	3.170E-22	0.000E+00	0.000E+00	0.000E+00	2.720E-29	0.000E+00	1.690E-22
RB-89	0.000E+00	3.500E-26	0.000E+00	0.000E+00	0.000E+00	5.360E-35	0.000E+00	2.470E-26
SR-89	1.510E+10	0.000E+00	0.000E+00	0.000E+00	0.000E+00	1.800E+09	0.000E+00	4.340E+08
SR-90	7.510E+11	0.000E+00	0.000E+00	0.000E+00	0.000E+00	2.110E+10	0.000E+00	1.850E+11
SR-91	2.850E+05	0.000E+00	0.000E+00	0.000E+00	0.000E+00	1.290E+06	0.000E+00	1.130E+04

APPENDIX H

R_i Teen Dose Factors for use in the Gaseous Dose Calculations

Agegroup:	TEEN	Pathway:	Vegetation (VEG)			Units:	m^2·mrem/yr / mCi/sec; mrem/yr / mCi/m^3 (H-3)	
Nuclide	**Bone**	**Liver**	**Thyroid**	**Kidney**	**Lung**	**Gilli**	**Skin**	**Total Body**
SR-92	3.970E+02	0.000E+00	0.000E+00	0.000E+00	0.000E+00	1.010E+04	0.000E+00	1.690E+01
Y-90	1.240E+04	0.000E+00	0.000E+00	0.000E+00	0.000E+00	1.020E+08	0.000E+00	3.350E+02
Y-91	7.840E+06	0.000E+00	0.000E+00	0.000E+00	0.000E+00	3.210E+09	0.000E+00	2.100E+05
Y-91M	4.860E-09	0.000E+00	0.000E+00	0.000E+00	0.000E+00	2.290E-07	0.000E+00	1.860E-10
Y-92	8.600E-01	0.000E+00	0.000E+00	0.000E+00	0.000E+00	2.360E+04	0.000E+00	2.490E-02
Y-93	1.590E+02	0.000E+00	0.000E+00	0.000E+00	0.000E+00	4.860E+06	0.000E+00	4.360E+00
ZR-95	1.720E+06	5.430E+05	0.000E+00	7.980E+05	0.000E+00	1.250E+09	0.000E+00	3.730E+05
ZR-97	3.120E+02	6.180E+01	0.000E+00	9.370E+01	0.000E+00	1.670E+07	0.000E+00	2.850E+01
NB-95	1.920E+05	1.070E+05	0.000E+00	1.030E+05	0.000E+00	4.560E+08	0.000E+00	5.870E+04
MO-99	0.000E+00	5.650E+06	0.000E+00	1.290E+07	0.000E+00	1.010E+07	0.000E+00	1.080E+06
TC-99M	2.740E+00	7.630E+00	0.000E+00	1.140E+02	4.240E+00	5.010E+03	0.000E+00	9.890E+01
TC-101	7.640E-31	1.090E-30	0.000E+00	1.970E-29	6.620E-31	1.860E-37	0.000E+00	1.070E-29
RU-103	6.820E+06	0.000E+00	0.000E+00	2.400E+07	0.000E+00	5.700E+08	0.000E+00	2.920E+06
RU-105	5.000E+01	0.000E+00	0.000E+00	6.310E+02	0.000E+00	4.040E+04	0.000E+00	1.940E+01
RU-106	3.100E+08	0.000E+00	0.000E+00	5.970E+08	0.000E+00	1.480E+10	0.000E+00	3.900E+07
AG-110M	1.520E+07	1.430E+07	0.000E+00	2.740E+07	0.000E+00	4.030E+09	0.000E+00	8.720E+06
TE-125M	1.480E+08	5.340E+07	4.140E+07	0.000E+00	0.000E+00	4.370E+08	0.000E+00	1.980E+07
TE-127	5.330E+03	1.890E+03	3.680E+03	2.160E+04	0.000E+00	4.120E+05	0.000E+00	1.150E+03
TE-127M	5.510E+08	1.960E+08	1.310E+08	2.240E+09	0.000E+00	1.370E+09	0.000E+00	6.560E+07
TE-129	7.140E-04	2.660E-04	5.100E-04	3.000E-03	0.000E+00	3.910E-03	0.000E+00	1.740E-04
TE-129M	3.620E+08	1.340E+08	1.170E+08	1.510E+09	0.000E+00	1.360E+09	0.000E+00	5.730E+07
TE-131	1.390E-15	5.750E-16	1.070E-15	6.100E-15	0.000E+00	1.140E-16	0.000E+00	4.360E-16
TE-131M	8.440E+05	4.050E+05	6.090E+05	4.220E+06	0.000E+00	3.250E+07	0.000E+00	3.380E+05
TE-132	3.910E+06	2.470E+06	2.610E+06	2.370E+07	0.000E+00	7.840E+07	0.000E+00	2.330E+06
I-130	3.510E+05	1.010E+06	8.280E+07	1.560E+06	0.000E+00	7.800E+05	0.000E+00	4.050E+05

APPENDIX H

R_i Teen Dose Factors for use in the Gaseous Dose Calculations

Agegroup:	TEEN	Pathway:	Vegetation (VEG)			Units:	m^2·mrem/yr / mCi/sec; mrem/yr / mCi/m^3 (H-3)	
Nuclide	**Bone**	**Liver**	**Thyroid**	**Kidney**	**Lung**	**Gilli**	**Skin**	**Total Body**
I-131	7.690E+07	1.080E+08	3.140E+10	1.850E+08	0.000E+00	2.130E+07	0.000E+00	5.780E+07
I-132	5.190E+01	1.360E+02	4.580E+03	2.140E+02	0.000E+00	5.920E+01	0.000E+00	4.880E+01
I-133	1.940E+06	3.290E+06	4.590E+08	5.760E+06	0.000E+00	2.490E+06	0.000E+00	1.000E+06
I-134	8.720E-05	2.310E-04	3.850E-03	3.640E-04	0.000E+00	3.050E-06	0.000E+00	8.310E-05
I-135	3.520E+04	9.070E+04	5.830E+06	1.430E+05	0.000E+00	1.000E+05	0.000E+00	3.360E+04
CS-134	7.100E+09	1.670E+10	0.000E+00	5.310E+09	2.030E+09	2.080E+08	0.000E+00	7.750E+09
CS-136	4.370E+07	1.720E+08	0.000E+00	9.370E+07	1.480E+07	1.380E+07	0.000E+00	1.160E+08
CS-137	1.010E+10	1.350E+10	0.000E+00	4.590E+09	1.780E+09	1.920E+08	0.000E+00	4.690E+09
CS-138	3.610E-11	6.940E-11	0.000E+00	5.120E-11	5.960E-12	3.150E-14	0.000E+00	3.470E-11
BA-139	2.690E-02	1.890E-05	0.000E+00	1.780E-05	1.300E-05	2.400E-01	0.000E+00	7.830E-04
BA-140	1.380E+08	1.690E+05	0.000E+00	5.740E+04	1.140E+05	2.130E+08	0.000E+00	8.900E+06
BA-141	1.080E-21	8.040E-25	0.000E+00	7.460E-25	5.500E-25	2.290E-27	0.000E+00	3.590E-23
BA-142	5.490E-39	5.490E-42	0.000E+00	4.640E-42	3.650E-42	1.680E-50	0.000E+00	3.380E-40
LA-140	1.810E+03	8.880E+02	0.000E+00	0.000E+00	0.000E+00	5.100E+07	0.000E+00	2.360E+02
LA-142	1.850E-04	8.240E-05	0.000E+00	0.000E+00	0.000E+00	2.510E+00	0.000E+00	2.050E-05
CE-141	2.830E+05	1.890E+05	0.000E+00	8.890E+04	0.000E+00	5.400E+08	0.000E+00	2.170E+04
CE-143	9.330E+02	6.790E+05	0.000E+00	3.040E+02	0.000E+00	2.040E+07	0.000E+00	7.580E+01
CE-144	5.270E+07	2.180E+07	0.000E+00	1.300E+07	0.000E+00	1.330E+10	0.000E+00	2.830E+06
PR-143	7.000E+04	2.800E+04	0.000E+00	1.630E+04	0.000E+00	2.300E+08	0.000E+00	3.490E+03
PR-144	2.900E-26	1.190E-26	0.000E+00	6.800E-27	0.000E+00	3.190E-29	0.000E+00	1.470E-27
ND-147	3.620E+04	3.940E+04	0.000E+00	2.310E+04	0.000E+00	1.420E+08	0.000E+00	2.360E+03
W-187	3.540E+04	2.880E+04	0.000E+00	0.000E+00	0.000E+00	7.800E+06	0.000E+00	1.010E+04
NP-239	1.390E+03	1.310E+02	0.000E+00	4.100E+02	0.000E+00	2.100E+07	0.000E+00	7.260E+01

APPENDIX H

R_i Teen Dose Factors for use in the Gaseous Dose Calculations

Agegroup:	TEEN	Pathway:	Inhalation (INHL)			Units:	mrem/yr / mCi/m^3	
Nuclide	**Bone**	**Liver**	**Thyroid**	**Kidney**	**Lung**	**Gilli**	**Skin**	**Total Body**
H-3	0.000E+00	1.270E+03	1.270E+03	1.270E+03	1.270E+03	1.270E+03	0.000E+00	1.270E+03
C-14	2.600E+04	4.870E+03	4.870E+03	4.870E+03	4.870E+03	4.870E+03	0.000E+00	4.870E+03
NA-24	1.380E+04	1.380E+04	1.380E+04	1.380E+04	1.380E+04	1.380E+04	0.000E+00	1.380E+04
P-32	1.890E+06	1.100E+05	0.000E+00	0.000E+00	0.000E+00	9.280E+04	0.000E+00	7.160E+04
CR-51	0.000E+00	0.000E+00	7.500E+01	3.070E+01	2.100E+04	3.000E+03	0.000E+00	1.350E+02
MN-54	0.000E+00	5.110E+04	0.000E+00	1.270E+04	1.980E+06	6.680E+04	0.000E+00	8.400E+03
MN-56	0.000E+00	1.700E+00	0.000E+00	1.790E+00	1.520E+04	5.740E+04	0.000E+00	2.520E-01
FE-55	3.340E+04	2.380E+04	0.000E+00	0.000E+00	1.240E+05	6.390E+03	0.000E+00	5.540E+03
FE-59	1.590E+04	3.700E+04	0.000E+00	0.000E+00	1.530E+06	1.780E+05	0.000E+00	1.430E+04
CO-58	0.000E+00	2.070E+03	0.000E+00	0.000E+00	1.340E+06	9.520E+04	0.000E+00	2.780E+03
CO-60	0.000E+00	1.510E+04	0.000E+00	0.000E+00	8.720E+06	2.590E+05	0.000E+00	1.980E+04
NI-63	5.800E+05	4.340E+04	0.000E+00	0.000E+00	3.070E+05	1.420E+04	0.000E+00	1.980E+04
NI-65	2.180E+00	2.930E-01	0.000E+00	0.000E+00	9.360E+03	3.670E+04	0.000E+00	1.270E-01
CU-64	0.000E+00	2.030E+00	0.000E+00	6.410E+00	1.110E+04	6.140E+04	0.000E+00	8.480E-01
ZN-65	3.860E+04	1.340E+05	0.000E+00	8.640E+04	1.240E+06	4.660E+04	0.000E+00	6.240E+04
ZN-69	4.830E-02	9.200E-02	0.000E+00	6.020E-02	1.580E+03	2.850E+02	0.000E+00	6.460E-03
BR-83	0.000E+00	0.000E+00	0.000E+00	0.000E+00	0.000E+00	0.000E+00	0.000E+00	3.440E+02
BR-84	0.000E+00	0.000E+00	0.000E+00	0.000E+00	0.000E+00	0.000E+00	0.000E+00	4.330E+02
BR-85	0.000E+00	0.000E+00	0.000E+00	0.000E+00	0.000E+00	0.000E+00	0.000E+00	1.830E+01
RB-86	0.000E+00	1.900E+05	0.000E+00	0.000E+00	0.000E+00	1.770E+04	0.000E+00	8.400E+04
RB-88	0.000E+00	5.460E+02	0.000E+00	0.000E+00	0.000E+00	2.920E-05	0.000E+00	2.720E+02
RB-89	0.000E+00	3.520E+02	0.000E+00	0.000E+00	0.000E+00	3.380E-07	0.000E+00	2.330E+02
SR-89	4.340E+05	0.000E+00	0.000E+00	0.000E+00	2.420E+06	3.710E+05	0.000E+00	1.250E+04
SR-90	1.080E+08	0.000E+00	0.000E+00	0.000E+00	1.650E+07	7.650E+05	0.000E+00	6.680E+06
SR-91	8.800E+01	0.000E+00	0.000E+00	0.000E+00	6.070E+04	2.590E+05	0.000E+00	3.510E+00

APPENDIX H

R_i Teen Dose Factors for use in the Gaseous Dose Calculations

Agegroup:	TEEN	Pathway:	Inhalation (INHL)			Units:	mrem/yr / mCi/m^3	
Nuclide	**Bone**	**Liver**	**Thyroid**	**Kidney**	**Lung**	**Gilli**	**Skin**	**Total Body**
SR-92	9.520E+00	0.000E+00	0.000E+00	0.000E+00	2.740E+04	1.190E+05	0.000E+00	4.060E-01
Y-90	2.980E+03	0.000E+00	0.000E+00	0.000E+00	2.930E+05	5.590E+05	0.000E+00	8.000E+01
Y-91	6.610E+05	0.000E+00	0.000E+00	0.000E+00	2.940E+06	4.090E+05	0.000E+00	1.770E+04
Y-91M	3.700E-01	0.000E+00	0.000E+00	0.000E+00	3.200E+03	3.020E+01	0.000E+00	1.420E-02
Y-92	1.470E+01	0.000E+00	0.000E+00	0.000E+00	2.680E+04	1.650E+05	0.000E+00	4.290E-01
Y-93	1.350E+02	0.000E+00	0.000E+00	0.000E+00	8.320E+04	5.790E+05	0.000E+00	3.720E+00
ZR-95	1.460E+05	4.580E+04	0.000E+00	6.740E+04	2.690E+06	1.490E+05	0.000E+00	3.150E+04
ZR-97	1.380E+02	2.720E+01	0.000E+00	4.120E+01	1.300E+05	6.300E+05	0.000E+00	1.260E+01
NB-95	1.860E+04	1.030E+04	0.000E+00	1.000E+04	7.510E+05	9.680E+04	0.000E+00	5.660E+03
MO-99	0.000E+00	1.690E+02	0.000E+00	4.110E+02	1.540E+05	2.690E+05	0.000E+00	3.220E+01
TC-99M	1.380E-03	3.860E-03	0.000E+00	5.760E-02	1.150E+03	6.130E+03	0.000E+00	4.990E-02
TC-101	5.920E-05	8.400E-05	0.000E+00	1.520E-03	6.670E+02	8.720E-07	0.000E+00	8.240E-04
RU-103	2.100E+03	0.000E+00	0.000E+00	7.430E+03	7.830E+05	1.090E+05	0.000E+00	8.960E+02
RU-105	1.120E+00	0.000E+00	0.000E+00	1.410E+00	1.820E+04	9.040E+04	0.000E+00	4.340E-01
RU-106	9.840E+04	0.000E+00	0.000E+00	1.900E+05	1.610E+07	9.600E+05	0.000E+00	1.240E+04
AG-110M	1.380E+04	1.310E+04	0.000E+00	2.500E+04	6.750E+06	2.730E+05	0.000E+00	7.990E+03
TE-125M	4.880E+03	2.240E+03	1.400E+03	0.000E+00	5.360E+05	7.500E+04	0.000E+00	6.670E+02
TE-127	2.010E+00	9.120E-01	1.420E+00	7.280E+00	1.120E+04	8.080E+04	0.000E+00	4.420E-01
TE-127M	1.800E+04	8.160E+03	4.380E+03	6.540E+04	1.660E+06	1.590E+05	0.000E+00	2.180E+03
TE-129	7.100E-02	3.380E-02	5.180E-02	2.660E-01	3.300E+03	1.620E+03	0.000E+00	1.760E-02
TE-129M	1.390E+04	6.580E+03	4.580E+03	5.190E+04	1.980E+06	4.050E+05	0.000E+00	2.250E+03
TE-131	1.580E-02	8.320E-03	1.240E-02	6.180E-02	2.340E+03	1.510E+01	0.000E+00	5.040E-03
TE-131M	9.840E+01	6.010E+01	7.250E+01	4.390E+02	2.380E+05	6.210E+05	0.000E+00	4.020E+01
TE-132	3.600E+02	2.900E+02	2.460E+02	1.950E+03	4.490E+05	4.630E+05	0.000E+00	2.190E+02
I-130	6.240E+03	1.790E+04	1.490E+06	2.750E+04	0.000E+00	9.120E+03	0.000E+00	7.170E+03

APPENDIX H

R_i Teen Dose Factors for use in the Gaseous Dose Calculations

Agegroup:	TEEN	Pathway:	Inhalation (INHL)			Units:	mrem/yr / mCi/m^3	
Nuclide	**Bone**	**Liver**	**Thyroid**	**Kidney**	**Lung**	**Gilli**	**Skin**	**Total Body**
I-131	3.540E+04	4.910E+04	1.460E+07	8.400E+04	0.000E+00	6.490E+03	0.000E+00	2.640E+04
I-132	1.590E+03	4.380E+03	1.510E+05	6.920E+03	0.000E+00	1.270E+03	0.000E+00	1.580E+03
I-133	1.220E+04	2.050E+04	2.920E+06	3.590E+04	0.000E+00	1.030E+04	0.000E+00	6.220E+03
I-134	8.880E+02	2.320E+03	3.950E+04	3.660E+03	0.000E+00	2.040E+01	0.000E+00	8.400E+02
I-135	3.700E+03	9.440E+03	6.210E+05	1.490E+04	0.000E+00	6.950E+03	0.000E+00	3.490E+03
CS-134	5.020E+05	1.130E+06	0.000E+00	3.750E+05	1.460E+05	9.760E+03	0.000E+00	5.490E+05
CS-136	5.150E+04	1.940E+05	0.000E+00	1.100E+05	1.780E+04	1.090E+04	0.000E+00	1.370E+05
CS-137	6.700E+05	8.480E+05	0.000E+00	3.040E+05	1.210E+05	8.480E+03	0.000E+00	3.110E+05
CS-138	4.660E+02	8.560E+02	0.000E+00	6.620E+02	7.870E+01	2.700E-01	0.000E+00	4.460E+02
BA-139	1.340E+00	9.440E-04	0.000E+00	8.880E-04	6.460E+03	6.450E+03	0.000E+00	3.900E-02
BA-140	5.470E+04	6.700E+01	0.000E+00	2.280E+01	2.030E+06	2.290E+05	0.000E+00	3.520E+03
BA-141	1.420E-01	1.060E-04	0.000E+00	9.840E-05	3.290E+03	7.460E-04	0.000E+00	4.740E-03
BA-142	3.700E-02	3.700E-05	0.000E+00	3.140E-05	1.910E+03	4.790E-10	0.000E+00	2.270E-03
LA-140	4.790E+02	2.360E+02	0.000E+00	0.000E+00	2.140E+05	4.870E+05	0.000E+00	6.260E+01
LA-142	9.600E-01	4.250E-01	0.000E+00	0.000E+00	1.020E+04	1.200E+04	0.000E+00	1.060E-01
CE-141	2.840E+04	1.900E+04	0.000E+00	8.880E+03	6.140E+05	1.260E+05	0.000E+00	2.170E+03
CE-143	2.660E+02	1.940E+02	0.000E+00	8.640E+01	1.300E+05	2.550E+05	0.000E+00	2.160E+01
CE-144	4.890E+06	2.020E+06	0.000E+00	1.210E+06	1.340E+07	8.640E+05	0.000E+00	2.620E+05
PR-143	1.340E+04	5.310E+03	0.000E+00	3.090E+03	4.830E+05	2.140E+05	0.000E+00	6.620E+02
PR-144	4.300E-02	1.760E-02	0.000E+00	1.010E-02	1.750E+03	2.350E-04	0.000E+00	2.180E-03
ND-147	7.860E+03	8.560E+03	0.000E+00	5.020E+03	3.720E+05	1.820E+05	0.000E+00	5.130E+02
W-187	1.200E+01	9.760E+00	0.000E+00	0.000E+00	4.740E+04	1.770E+05	0.000E+00	3.430E+00
NP-239	3.380E+02	3.190E+01	0.000E+00	1.000E+02	6.490E+04	1.320E+05	0.000E+00	1.770E+01

APPENDIX H

R_i Teen Dose Factors for use in the Gaseous Dose Calculations

Agegroup:	TEEN	Pathway:	Ground Plane Deposition (GPD)			Units:	m^2·mrem/yr / mCi/sec	
Nuclide	**Bone**	**Liver**	**Thyroid**	**Kidney**	**Lung**	**Gilli**	**Skin**	**Total Body**
H-3	0.000E+00	0.000E+00	0.000E+00	0.000E+00	0.000E+00	0.000E+00	0.000E+00	0.000E+00
C-14	0.000E+00	0.000E+00	0.000E+00	0.000E+00	0.000E+00	0.000E+00	0.000E+00	0.000E+00
NA-24	1.190E+07	1.190E+07	1.190E+07	1.190E+07	1.190E+07	1.190E+07	1.390E+07	1.190E+07
P-32	0.000E+00	0.000E+00	0.000E+00	0.000E+00	0.000E+00	0.000E+00	0.000E+00	0.000E+00
CR-51	4.660E+06	4.660E+06	4.660E+06	4.660E+06	4.660E+06	4.660E+06	5.510E+06	4.660E+06
MN-54	1.390E+09	1.390E+09	1.390E+09	1.390E+09	1.390E+09	1.390E+09	1.630E+09	1.390E+09
MN-56	9.020E+05	9.020E+05	9.020E+05	9.020E+05	9.020E+05	9.020E+05	1.070E+06	9.020E+05
FE-55	0.000E+00	0.000E+00	0.000E+00	0.000E+00	0.000E+00	0.000E+00	0.000E+00	0.000E+00
FE-59	2.730E+08	2.730E+08	2.730E+08	2.730E+08	2.730E+08	2.730E+08	3.210E+08	2.730E+08
CO-58	3.790E+08	3.790E+08	3.790E+08	3.790E+08	3.790E+08	3.790E+08	4.440E+08	3.790E+08
CO-60	2.150E+10	2.150E+10	2.150E+10	2.150E+10	2.150E+10	2.150E+10	2.530E+10	2.150E+10
NI-63	0.000E+00	0.000E+00	0.000E+00	0.000E+00	0.000E+00	0.000E+00	0.000E+00	0.000E+00
NI-65	2.970E+05	2.970E+05	2.970E+05	2.970E+05	2.970E+05	2.970E+05	3.450E+05	2.970E+05
CU-64	6.070E+05	6.070E+05	6.070E+05	6.070E+05	6.070E+05	6.070E+05	6.880E+05	6.070E+05
ZN-65	7.470E+08	7.470E+08	7.470E+08	7.470E+08	7.470E+08	7.470E+08	8.590E+08	7.470E+08
ZN-69	0.000E+00	0.000E+00	0.000E+00	0.000E+00	0.000E+00	0.000E+00	0.000E+00	0.000E+00
BR-83	4.870E+03	4.870E+03	4.870E+03	4.870E+03	4.870E+03	4.870E+03	7.080E+03	4.870E+03
BR-84	2.030E+05	2.030E+05	2.030E+05	2.030E+05	2.030E+05	2.030E+05	2.360E+05	2.030E+05
BR-85	0.000E+00	0.000E+00	0.000E+00	0.000E+00	0.000E+00	0.000E+00	0.000E+00	0.000E+00
RB-86	8.990E+06	8.990E+06	8.990E+06	8.990E+06	8.990E+06	8.990E+06	1.030E+07	8.990E+06
RB-88	3.310E+04	3.310E+04	3.310E+04	3.310E+04	3.310E+04	3.310E+04	3.780E+04	3.310E+04
RB-89	1.230E+05	1.230E+05	1.230E+05	1.230E+05	1.230E+05	1.230E+05	1.480E+05	1.230E+05
SR-89	2.160E+04	2.160E+04	2.160E+04	2.160E+04	2.160E+04	2.160E+04	2.510E+04	2.160E+04
SR-90	0.000E+00	0.000E+00	0.000E+00	0.000E+00	0.000E+00	0.000E+00	0.000E+00	0.000E+00
SR-91	2.150E+06	2.150E+06	2.150E+06	2.150E+06	2.150E+06	2.150E+06	2.510E+06	2.150E+06

APPENDIX H

R_i Teen Dose Factors for use in the Gaseous Dose Calculations

Agegroup:	TEEN	Pathway:	Ground Plane Deposition (GPD)			Units:	m^2·mrem/yr / mCi/sec	
Nuclide	**Bone**	**Liver**	**Thyroid**	**Kidney**	**Lung**	**Gilli**	**Skin**	**Total Body**
SR-92	7.770E+05	7.770E+05	7.770E+05	7.770E+05	7.770E+05	7.770E+05	8.630E+05	7.770E+05
Y-90	4.490E+03	4.490E+03	4.490E+03	4.490E+03	4.490E+03	4.490E+03	5.310E+03	4.490E+03
Y-91	1.070E+06	1.070E+06	1.070E+06	1.070E+06	1.070E+06	1.070E+06	1.210E+06	1.070E+06
Y-91M	1.000E+05	1.000E+05	1.000E+05	1.000E+05	1.000E+05	1.000E+05	1.160E+05	1.000E+05
Y-92	1.800E+05	1.800E+05	1.800E+05	1.800E+05	1.800E+05	1.800E+05	2.140E+05	1.800E+05
Y-93	1.830E+05	1.830E+05	1.830E+05	1.830E+05	1.830E+05	1.830E+05	2.510E+05	1.830E+05
ZR-95	2.450E+08	2.450E+08	2.450E+08	2.450E+08	2.450E+08	2.450E+08	2.840E+08	2.450E+08
ZR-97	2.960E+06	2.960E+06	2.960E+06	2.960E+06	2.960E+06	2.960E+06	3.440E+06	2.960E+06
NB-95	1.370E+08	1.370E+08	1.370E+08	1.370E+08	1.370E+08	1.370E+08	1.610E+08	1.370E+08
MO-99	3.990E+06	3.990E+06	3.990E+06	3.990E+06	3.990E+06	3.990E+06	4.630E+06	3.990E+06
TC-99M	1.840E+05	1.840E+05	1.840E+05	1.840E+05	1.840E+05	1.840E+05	2.110E+05	1.840E+05
TC-101	2.040E+04	2.040E+04	2.040E+04	2.040E+04	2.040E+04	2.040E+04	2.260E+04	2.040E+04
RU-103	1.080E+08	1.080E+08	1.080E+08	1.080E+08	1.080E+08	1.080E+08	1.260E+08	1.080E+08
RU-105	6.360E+05	6.360E+05	6.360E+05	6.360E+05	6.360E+05	6.360E+05	7.210E+05	6.360E+05
RU-106	4.220E+08	4.220E+08	4.220E+08	4.220E+08	4.220E+08	4.220E+08	5.070E+08	4.220E+08
AG-110M	3.440E+09	3.440E+09	3.440E+09	3.440E+09	3.440E+09	3.440E+09	4.010E+09	3.440E+09
TE-125M	1.550E+06	1.550E+06	1.550E+06	1.550E+06	1.550E+06	1.550E+06	2.130E+06	1.550E+06
TE-127	2.980E+03	2.980E+03	2.980E+03	2.980E+03	2.980E+03	2.980E+03	3.280E+03	2.980E+03
TE-127M	9.160E+04	9.160E+04	9.160E+04	9.160E+04	9.160E+04	9.160E+04	1.080E+05	9.160E+04
TE-129	2.620E+04	2.620E+04	2.620E+04	2.620E+04	2.620E+04	2.620E+04	3.100E+04	2.620E+04
TE-129M	1.980E+07	1.980E+07	1.980E+07	1.980E+07	1.980E+07	1.980E+07	2.310E+07	1.980E+07
TE-131	2.920E+04	2.920E+04	2.920E+04	2.920E+04	2.920E+04	2.920E+04	3.450E+07	2.920E+04
TE-131M	8.030E+06	8.030E+06	8.030E+06	8.030E+06	8.030E+06	8.030E+06	9.460E+06	8.030E+06
TE-132	4.230E+06	4.230E+06	4.230E+06	4.230E+06	4.230E+06	4.230E+06	4.980E+06	4.230E+06
I-130	5.510E+06	5.510E+06	5.510E+06	5.510E+06	5.510E+06	5.510E+06	6.690E+06	5.510E+06

APPENDIX H

R_i Teen Dose Factors for use in the Gaseous Dose Calculations

Agegroup:	TEEN	Pathway:	Ground Plane Deposition (GPD)			Units:	m^2·mrem/yr / mCi/sec	
Nuclide	**Bone**	**Liver**	**Thyroid**	**Kidney**	**Lung**	**Gilli**	**Skin**	**Total Body**
I-131	1.720E+07	1.720E+07	1.720E+07	1.720E+07	1.720E+07	1.720E+07	2.090E+07	1.720E+07
I-132	1.250E+06	1.250E+06	1.250E+06	1.250E+06	1.250E+06	1.250E+06	1.470E+06	1.250E+06
I-133	2.450E+06	2.450E+06	2.450E+06	2.450E+06	2.450E+06	2.450E+06	2.980E+06	2.450E+06
I-134	4.470E+05	4.470E+05	4.470E+05	4.470E+05	4.470E+05	4.470E+05	5.300E+05	4.470E+05
I-135	2.530E+06	2.530E+06	2.530E+06	2.530E+06	2.530E+06	2.530E+06	2.950E+06	2.530E+06
CS-134	6.860E+09	6.860E+09	6.860E+09	6.860E+09	6.860E+09	6.860E+09	8.000E+09	6.860E+09
CS-136	1.510E+08	1.510E+08	1.510E+08	1.510E+08	1.510E+08	1.510E+08	1.710E+08	1.510E+08
CS-137	1.030E+10	1.030E+10	1.030E+10	1.030E+10	1.030E+10	1.030E+10	1.200E+10	1.030E+10
CS-138	3.590E+05	3.590E+05	3.590E+05	3.590E+05	3.590E+05	3.590E+05	4.100E+05	3.590E+05
BA-139	1.060E+05	1.060E+05	1.060E+05	1.060E+05	1.060E+05	1.060E+05	1.190E+05	1.060E+05
BA-140	2.050E+07	2.050E+07	2.050E+07	2.050E+07	2.050E+07	2.050E+07	2.350E+07	2.050E+07
BA-141	4.170E+04	4.170E+04	4.170E+04	4.170E+04	4.170E+04	4.170E+04	4.750E+04	4.170E+04
BA-142	4.490E+04	4.490E+04	4.490E+04	4.490E+04	4.490E+04	4.490E+04	5.110E+04	4.490E+04
LA-140	1.920E+07	1.920E+07	1.920E+07	1.920E+07	1.920E+07	1.920E+07	2.180E+07	1.920E+07
LA-142	7.600E+05	7.600E+05	7.600E+05	7.600E+05	7.600E+05	7.600E+05	9.120E+05	7.600E+05
CE-141	1.370E+07	1.370E+07	1.370E+07	1.370E+07	1.370E+07	1.370E+07	1.540E+07	1.370E+07
CE-143	2.310E+06	2.310E+06	2.310E+06	2.310E+06	2.310E+06	2.310E+06	2.630E+06	2.310E+06
CE-144	6.950E+07	6.950E+07	6.950E+07	6.950E+07	6.950E+07	6.950E+07	8.040E+07	6.950E+07
PR-143	0.000E+00	0.000E+00	0.000E+00	0.000E+00	0.000E+00	0.000E+00	0.000E+00	0.000E+00
PR-144	1.830E+03	1.830E+03	1.830E+03	1.830E+03	1.830E+03	1.830E+03	2.110E+03	1.830E+03
ND-147	8.390E+06	8.390E+06	8.390E+06	8.390E+06	8.390E+06	8.390E+06	1.010E+07	8.390E+06
W-187	2.350E+06	2.350E+06	2.350E+06	2.350E+06	2.350E+06	2.350E+06	2.730E+06	2.350E+06
NP-239	1.710E+06	1.710E+06	1.710E+06	1.710E+06	1.710E+06	1.710E+06	1.980E+06	1.710E+06

APPENDIX I

R_i Child Dose Factors for use in the Gaseous Dose Calculations

Agegroup:	CHILD	Pathway:	Grs/Cow/Milk (CMILK)			Units:	m^2·mrem/yr / mCi/sec; mrem/yr / mCi/m^3 (H-3)	
Nuclide	**Bone**	**Liver**	**Thyroid**	**Kidney**	**Lung**	**Gilli**	**Skin**	**Total Body**
H-3	0.000E+00	1.570E+03	1.570E+03	1.570E+03	1.570E+03	1.570E+03	0.000E+00	1.570E+03
C-14	1.190E+09	2.390E+08	2.390E+08	2.390E+08	2.390E+08	2.390E+08	0.000E+00	2.390E+08
NA-24	8.850E+06	8.850E+06	8.850E+06	8.850E+06	8.850E+06	8.850E+06	0.000E+00	8.850E+06
P-32	7.780E+10	3.640E+09	0.000E+00	0.000E+00	0.000E+00	2.150E+09	0.000E+00	3.000E+09
CR-51	0.000E+00	0.000E+00	5.650E+04	1.540E+04	1.030E+05	5.400E+06	0.000E+00	1.020E+05
MN-54	0.000E+00	2.100E+07	0.000E+00	5.880E+06	0.000E+00	1.760E+07	0.000E+00	5.590E+06
MN-56	0.000E+00	1.260E-02	0.000E+00	1.530E-02	0.000E+00	1.830E+00	0.000E+00	2.860E-03
FE-55	1.120E+08	5.930E+07	0.000E+00	0.000E+00	3.350E+07	1.100E+07	0.000E+00	1.840E+07
FE-59	1.200E+08	1.950E+08	0.000E+00	0.000E+00	5.640E+07	2.030E+08	0.000E+00	9.690E+07
CO-58	0.000E+00	1.210E+07	0.000E+00	0.000E+00	0.000E+00	7.070E+07	0.000E+00	3.710E+07
CO-60	0.000E+00	4.320E+07	0.000E+00	0.000E+00	0.000E+00	2.390E+08	0.000E+00	1.270E+08
NI-63	2.960E+10	1.590E+09	0.000E+00	0.000E+00	0.000E+00	1.070E+08	0.000E+00	1.010E+09
NI-65	1.660E+00	1.560E-01	0.000E+00	0.000E+00	0.000E+00	1.910E+01	0.000E+00	9.100E-02
CU-64	0.000E+00	7.460E+04	0.000E+00	1.800E+05	0.000E+00	3.500E+06	0.000E+00	4.510E+04
ZN-65	4.130E+09	1.100E+10	0.000E+00	6.940E+09	0.000E+00	1.930E+09	0.000E+00	6.850E+09
ZN-69	9.460E-12	1.370E-11	0.000E+00	8.300E-12	0.000E+00	8.620E-10	0.000E+00	1.260E-12
BR-83	0.000E+00	0.000E+00	0.000E+00	0.000E+00	0.000E+00	0.000E+00	0.000E+00	4.400E-01
BR-84	0.000E+00	0.000E+00	0.000E+00	0.000E+00	0.000E+00	0.000E+00	0.000E+00	6.510E-23
BR-85	0.000E+00	0.000E+00	0.000E+00	0.000E+00	0.000E+00	0.000E+00	0.000E+00	0.000E+00
RB-86	0.000E+00	8.770E+09	0.000E+00	0.000E+00	0.000E+00	5.640E+08	0.000E+00	5.390E+09
RB-88	0.000E+00	7.160E-45	0.000E+00	0.000E+00	0.000E+00	3.510E-46	0.000E+00	4.970E-45
RB-89	0.000E+00	1.340E-52	0.000E+00	0.000E+00	0.000E+00	1.170E-54	0.000E+00	1.190E-52
SR-89	6.620E+09	0.000E+00	0.000E+00	0.000E+00	0.000E+00	2.560E+08	0.000E+00	1.890E+08
SR-90	1.120E+11	0.000E+00	0.000E+00	0.000E+00	0.000E+00	1.510E+09	0.000E+00	2.830E+10
SR-91	1.300E+05	0.000E+00	0.000E+00	0.000E+00	0.000E+00	2.880E+05	0.000E+00	4.920E+03

APPENDIX I

R_i Child Dose Factors for use in the Gaseous Dose Calculations

Agegroup:	CHILD	Pathway:	Grs/Cow/Milk (CMILK)			Units:	m^2·mrem/yr / mCi/sec; mrem/yr / mCi/m^3 (H-3)	
Nuclide	**Bone**	**Liver**	**Thyroid**	**Kidney**	**Lung**	**Gilli**	**Skin**	**Total Body**
SR-92	2.180E+00	0.000E+00	0.000E+00	0.000E+00	0.000E+00	4.130E+01	0.000E+00	8.750E-02
Y-90	3.220E+02	0.000E+00	0.000E+00	0.000E+00	0.000E+00	9.170E+05	0.000E+00	8.620E+00
Y-91	3.900E+04	0.000E+00	0.000E+00	0.000E+00	0.000E+00	5.200E+06	0.000E+00	1.040E+03
Y-91M	2.670E-19	0.000E+00	0.000E+00	0.000E+00	0.000E+00	5.240E-16	0.000E+00	9.730E-21
Y-92	2.530E-04	0.000E+00	0.000E+00	0.000E+00	0.000E+00	7.310E+00	0.000E+00	7.240E-06
Y-93	1.010E+00	0.000E+00	0.000E+00	0.000E+00	0.000E+00	1.510E+04	0.000E+00	2.780E-02
ZR-95	3.830E+03	8.420E+02	0.000E+00	1.210E+03	0.000E+00	8.790E+05	0.000E+00	7.500E+02
ZR-97	1.920E+00	2.770E-01	0.000E+00	3.980E-01	0.000E+00	4.200E+04	0.000E+00	1.640E-01
NB-95	3.180E+05	1.240E+05	0.000E+00	1.160E+05	0.000E+00	2.290E+08	0.000E+00	8.840E+04
MO-99	0.000E+00	8.140E+07	0.000E+00	1.740E+08	0.000E+00	6.730E+07	0.000E+00	2.010E+07
TC-99M	1.320E+01	2.590E+01	0.000E+00	3.760E+02	1.320E+01	1.470E+04	0.000E+00	4.290E+02
TC-101	1.160E-59	1.220E-59	0.000E+00	2.080E-58	6.440E-60	3.870E-59	0.000E+00	1.540E-58
RU-103	4.280E+03	0.000E+00	0.000E+00	1.080E+04	0.000E+00	1.110E+05	0.000E+00	1.650E+03
RU-105	3.820E-03	0.000E+00	0.000E+00	3.360E-02	0.000E+00	2.490E+00	0.000E+00	1.390E-03
RU-106	9.240E+04	0.000E+00	0.000E+00	1.250E+05	0.000E+00	1.440E+06	0.000E+00	1.150E+04
AG-110M	2.090E+08	1.410E+08	0.000E+00	2.630E+08	0.000E+00	1.680E+10	0.000E+00	1.130E+08
TE-125M	7.380E+07	2.000E+07	2.070E+07	0.000E+00	0.000E+00	7.120E+07	0.000E+00	9.840E+06
TE-127	2.980E+03	8.020E+02	2.060E+03	8.470E+03	0.000E+00	1.160E+05	0.000E+00	6.380E+02
TE-127M	2.080E+08	5.600E+07	4.970E+07	5.930E+08	0.000E+00	1.680E+08	0.000E+00	2.470E+07
TE-129	1.280E-09	3.580E-10	9.160E-10	3.750E-09	0.000E+00	7.990E-08	0.000E+00	3.050E-10
TE-129M	2.710E+08	7.580E+07	8.750E+07	7.970E+08	0.000E+00	3.310E+08	0.000E+00	4.210E+07
TE-131	1.620E-32	4.920E-33	1.240E-32	4.890E-32	0.000E+00	8.490E-32	0.000E+00	4.810E-33
TE-131M	1.600E+06	5.530E+05	1.140E+06	5.350E+06	0.000E+00	2.240E+07	0.000E+00	5.890E+05
TE-132	1.020E+07	4.530E+06	6.600E+06	4.210E+07	0.000E+00	4.570E+07	0.000E+00	5.480E+06
I-130	1.730E+06	3.490E+06	3.840E+08	5.220E+06	0.000E+00	1.630E+06	0.000E+00	1.800E+06

APPENDIX I

R_i Child Dose Factors for use in the Gaseous Dose Calculations

Agegroup:	CHILD	Pathway:	Grs/Cow/Milk (CMILK)			Units:	m^2·mrem/yr / mCi/sec; mrem/yr / mCi/m^3 (H-3)	
Nuclide	**Bone**	**Liver**	**Thyroid**	**Kidney**	**Lung**	**Gilli**	**Skin**	**Total Body**
I-131	1.300E+09	1.310E+09	4.330E+11	2.150E+09	0.000E+00	1.170E+08	0.000E+00	7.450E+08
I-132	6.890E-01	1.270E+00	5.870E+01	1.940E+00	0.000E+00	1.490E+00	0.000E+00	5.820E-01
I-133	1.720E+07	2.120E+07	3.940E+09	3.540E+07	0.000E+00	8.560E+06	0.000E+00	8.030E+06
I-134	8.480E-12	1.570E-11	3.620E-10	2.410E-11	0.000E+00	1.040E-11	0.000E+00	7.250E-12
I-135	5.400E+04	9.720E+04	8.610E+06	1.490E+05	0.000E+00	7.400E+04	0.000E+00	4.600E+04
CS-134	2.260E+10	3.720E+10	0.000E+00	1.150E+10	4.130E+09	2.000E+08	0.000E+00	7.840E+09
CS-136	1.010E+09	2.780E+09	0.000E+00	1.480E+09	2.210E+08	9.770E+07	0.000E+00	1.800E+09
CS-137	3.220E+10	3.090E+10	0.000E+00	1.010E+10	3.620E+09	1.930E+08	0.000E+00	4.550E+09
CS-138	3.980E-23	5.530E-23	0.000E+00	3.890E-23	4.190E-24	2.550E-23	0.000E+00	3.510E-23
BA-139	2.010E-07	1.070E-10	0.000E+00	9.360E-11	6.300E-11	1.160E-05	0.000E+00	5.820E-09
BA-140	1.170E+08	1.030E+05	0.000E+00	3.340E+04	6.120E+04	5.930E+07	0.000E+00	6.840E+06
BA-141	1.850E-45	1.040E-48	0.000E+00	8.960E-49	6.090E-48	1.050E-45	0.000E+00	6.020E-47
BA-142	1.150E-79	8.310E-83	0.000E+00	6.720E-83	4.890E-83	1.510E-81	0.000E+00	6.450E-81
LA-140	1.940E+01	6.780E+00	0.000E+00	0.000E+00	0.000E+00	1.890E+05	0.000E+00	2.290E+00
LA-142	8.100E-11	2.580E-11	0.000E+00	0.000E+00	0.000E+00	5.120E-06	0.000E+00	8.090E-12
CE-141	2.190E+04	1.090E+04	0.000E+00	4.780E+03	0.000E+00	1.360E+07	0.000E+00	1.620E+03
CE-143	1.870E+02	1.020E+05	0.000E+00	4.260E+01	0.000E+00	1.490E+06	0.000E+00	1.470E+01
CE-144	1.620E+06	5.090E+05	0.000E+00	2.820E+05	0.000E+00	1.330E+08	0.000E+00	8.660E+04
PR-143	7.180E+02	2.160E+02	0.000E+00	1.170E+02	0.000E+00	7.750E+05	0.000E+00	3.560E+01
PR-144	2.680E-53	8.290E-54	0.000E+00	4.380E-54	0.000E+00	1.780E-50	0.000E+00	1.350E-54
ND-147	4.450E+02	3.600E+02	0.000E+00	1.980E+02	0.000E+00	5.700E+05	0.000E+00	2.790E+01
W-187	2.890E+04	1.710E+04	0.000E+00	0.000E+00	0.000E+00	2.400E+06	0.000E+00	7.670E+03
NP-239	1.720E+01	1.240E+00	0.000E+00	3.580E+00	0.000E+00	9.170E+04	0.000E+00	8.710E-01

APPENDIX I

R_i Child Dose Factors for use in the Gaseous Dose Calculations

Agegroup:	CHILD	Pathway:	Grs/Goat/Milk (GMILK)			Units:	m^2·mrem/yr / mCi/sec; mrem/yr / mCi/m^3 (H-3)	
Nuclide	**Bone**	**Liver**	**Thyroid**	**Kidney**	**Lung**	**Gilli**	**Skin**	**Total Body**
H-3	0.000E+00	3.200E+03	3.200E+03	3.200E+03	3.200E+03	3.200E+03	0.000E+00	3.200E+03
C-14	1.190E+09	2.390E+08	2.390E+08	2.390E+08	2.390E+08	2.390E+08	0.000E+00	2.390E+08
NA-24	1.060E+06	1.060E+06	1.060E+06	1.060E+06	1.060E+06	1.060E+06	0.000E+00	1.060E+06
P-32	9.330E+10	4.370E+09	0.000E+00	0.000E+00	0.000E+00	2.580E+09	0.000E+00	3.600E+09
CR-51	0.000E+00	0.000E+00	6.780E+03	1.850E+03	1.240E+04	6.480E+05	0.000E+00	1.220E+04
MN-54	0.000E+00	2.520E+06	0.000E+00	7.060E+05	0.000E+00	2.110E+06	0.000E+00	6.700E+05
MN-56	0.000E+00	1.520E-03	0.000E+00	1.840E-03	0.000E+00	2.200E-01	0.000E+00	3.430E-04
FE-55	1.450E+06	7.710E+05	0.000E+00	0.000E+00	4.360E+05	1.430E+05	0.000E+00	2.390E+05
FE-59	1.560E+06	2.530E+06	0.000E+00	0.000E+00	7.330E+05	2.630E+06	0.000E+00	1.260E+06
CO-58	0.000E+00	1.450E+06	0.000E+00	0.000E+00	0.000E+00	8.490E+06	0.000E+00	4.450E+06
CO-60	0.000E+00	5.180E+06	0.000E+00	0.000E+00	0.000E+00	2.870E+07	0.000E+00	1.530E+07
NI-63	3.560E+09	1.900E+08	0.000E+00	0.000E+00	0.000E+00	1.280E+07	0.000E+00	1.210E+08
NI-65	1.990E-01	1.870E-02	0.000E+00	0.000E+00	0.000E+00	2.290E+00	0.000E+00	1.090E-02
CU-64	0.000E+00	8.320E+03	0.000E+00	2.010E+04	0.000E+00	3.900E+05	0.000E+00	5.020E+03
ZN-65	4.960E+08	1.320E+09	0.000E+00	8.330E+08	0.000E+00	2.320E+08	0.000E+00	8.220E+08
ZN-69	1.140E-12	1.640E-12	0.000E+00	9.960E-13	0.000E+00	1.030E-10	0.000E+00	1.520E-13
BR-83	0.000E+00	0.000E+00	0.000E+00	0.000E+00	0.000E+00	0.000E+00	0.000E+00	5.280E-02
BR-84	0.000E+00	0.000E+00	0.000E+00	0.000E+00	0.000E+00	0.000E+00	0.000E+00	7.820E-24
BR-85	0.000E+00	0.000E+00	0.000E+00	0.000E+00	0.000E+00	0.000E+00	0.000E+00	0.000E+00
RB-86	0.000E+00	1.050E+09	0.000E+00	0.000E+00	0.000E+00	6.770E+07	0.000E+00	6.470E+08
RB-88	0.000E+00	8.590E-46	0.000E+00	0.000E+00	0.000E+00	4.210E-47	0.000E+00	5.970E-46
RB-89	0.000E+00	1.610E-53	0.000E+00	0.000E+00	0.000E+00	1.410E-55	0.000E+00	1.430E-53
SR-89	1.390E+10	0.000E+00	0.000E+00	0.000E+00	0.000E+00	5.380E+08	0.000E+00	3.970E+08
SR-90	2.350E+11	0.000E+00	0.000E+00	0.000E+00	0.000E+00	3.160E+09	0.000E+00	5.950E+10
SR-91	2.740E+05	0.000E+00	0.000E+00	0.000E+00	0.000E+00	6.040E+05	0.000E+00	1.030E+04

APPENDIX I

R_i Child Dose Factors for use in the Gaseous Dose Calculations

Agegroup:	CHILD	Pathway:	Grs/Goat/Milk (GMILK)			Units:	m^2·mrem/yr / mCi/sec; mrem/yr / mCi/m^3 (H-3)	
Nuclide	**Bone**	**Liver**	**Thyroid**	**Kidney**	**Lung**	**Gilli**	**Skin**	**Total Body**
SR-92	4.580E+00	0.000E+00	0.000E+00	0.000E+00	0.000E+00	8.680E+01	0.000E+00	1.840E-01
Y-90	3.870E+01	0.000E+00	0.000E+00	0.000E+00	0.000E+00	1.100E+05	0.000E+00	1.030E+00
Y-91	4.680E+03	0.000E+00	0.000E+00	0.000E+00	0.000E+00	6.240E+05	0.000E+00	1.250E+02
Y-91M	3.210E-20	0.000E+00	0.000E+00	0.000E+00	0.000E+00	6.280E-17	0.000E+00	1.170E-21
Y-92	3.040E-05	0.000E+00	0.000E+00	0.000E+00	0.000E+00	8.770E-01	0.000E+00	8.690E-07
Y-93	1.210E-01	0.000E+00	0.000E+00	0.000E+00	0.000E+00	1.810E+03	0.000E+00	3.330E-03
ZR-95	4.600E+02	1.010E+02	0.000E+00	1.450E+02	0.000E+00	1.050E+05	0.000E+00	9.000E+01
ZR-97	2.300E-01	3.330E-02	0.000E+00	4.780E-02	0.000E+00	5.040E+03	0.000E+00	1.960E-02
NB-95	3.810E+04	1.490E+04	0.000E+00	1.400E+04	0.000E+00	2.750E+07	0.000E+00	1.060E+04
MO-99	0.000E+00	9.760E+06	0.000E+00	2.090E+07	0.000E+00	8.080E+06	0.000E+00	2.420E+06
TC-99M	1.590E+00	3.110E+00	0.000E+00	4.520E+01	1.580E+00	1.770E+03	0.000E+00	5.150E+01
TC-101	1.400E-60	1.460E-60	0.000E+00	2.490E-59	7.720E-61	4.640E-60	0.000E+00	1.850E-59
RU-103	5.140E+02	0.000E+00	0.000E+00	1.290E+03	0.000E+00	1.330E+04	0.000E+00	1.980E+02
RU-105	4.580E-04	0.000E+00	0.000E+00	4.030E-03	0.000E+00	2.990E-01	0.000E+00	1.660E-04
RU-106	1.110E+04	0.000E+00	0.000E+00	1.500E+04	0.000E+00	1.720E+05	0.000E+00	1.380E+03
AG-110M	2.510E+07	1.690E+07	0.000E+00	3.150E+07	0.000E+00	2.010E+09	0.000E+00	1.350E+07
TE-125M	8.850E+06	2.400E+06	2.480E+06	0.000E+00	0.000E+00	8.540E+06	0.000E+00	1.180E+06
TE-127	3.570E+02	9.630E+01	2.470E+02	1.020E+03	0.000E+00	1.390E+04	0.000E+00	7.660E+01
TE-127M	2.500E+07	6.720E+06	5.970E+06	7.120E+07	0.000E+00	2.020E+07	0.000E+00	2.960E+06
TE-129	1.540E-10	4.300E-11	1.100E-10	4.510E-10	0.000E+00	9.590E-09	0.000E+00	3.660E-11
TE-129M	3.260E+07	9.090E+06	1.050E+07	9.560E+07	0.000E+00	3.970E+07	0.000E+00	5.060E+06
TE-131	1.940E-33	5.910E-34	1.480E-33	5.860E-33	0.000E+00	1.020E-32	0.000E+00	5.770E-34
TE-131M	1.920E+05	6.640E+04	1.360E+05	6.420E+05	0.000E+00	2.690E+06	0.000E+00	7.060E+04
TE-132	1.230E+06	5.440E+05	7.920E+05	5.050E+06	0.000E+00	5.480E+06	0.000E+00	6.570E+05
I-130	2.070E+06	4.190E+06	4.610E+08	6.260E+06	0.000E+00	1.960E+06	0.000E+00	2.160E+06

APPENDIX I

R_i Child Dose Factors for use in the Gaseous Dose Calculations

Agegroup:	CHILD	Pathway:	Grs/Goat/Milk (GMILK)			Units:	m^2·mrem/yr / mCi/sec; mrem/yr / mCi/m^3 (H-3)	
Nuclide	**Bone**	**Liver**	**Thyroid**	**Kidney**	**Lung**	**Gilli**	**Skin**	**Total Body**
I-131	1.560E+09	1.570E+09	5.200E+11	2.580E+09	0.000E+00	1.400E+08	0.000E+00	8.940E+08
I-132	8.270E-01	1.520E+00	7.050E+01	2.330E+00	0.000E+00	1.790E+00	0.000E+00	6.990E-01
I-133	2.060E+07	2.550E+07	4.730E+09	4.250E+07	0.000E+00	1.030E+07	0.000E+00	9.640E+06
I-134	1.020E-11	1.890E-11	4.350E-10	2.890E-11	0.000E+00	1.250E-11	0.000E+00	8.700E-12
I-135	6.480E+04	1.170E+05	1.030E+07	1.790E+05	0.000E+00	8.880E+04	0.000E+00	5.520E+04
CS-134	6.790E+10	1.110E+11	0.000E+00	3.450E+10	1.240E+10	6.010E+08	0.000E+00	2.350E+10
CS-136	3.030E+09	8.340E+09	0.000E+00	4.440E+09	6.630E+08	2.930E+08	0.000E+00	5.400E+09
CS-137	9.670E+10	9.260E+10	0.000E+00	3.020E+10	1.090E+10	5.800E+08	0.000E+00	1.370E+10
CS-138	1.190E-22	1.660E-22	0.000E+00	1.170E-22	1.260E-23	7.640E-23	0.000E+00	1.050E-22
BA-139	2.410E-08	1.290E-11	0.000E+00	1.120E-11	7.560E-12	1.390E-06	0.000E+00	6.980E-10
BA-140	1.410E+07	1.230E+04	0.000E+00	4.010E+03	7.340E+03	7.120E+06	0.000E+00	8.200E+05
BA-141	2.220E-46	1.240E-49	0.000E+00	1.080E-49	7.300E-49	1.270E-46	0.000E+00	7.230E-48
BA-142	1.390E-80	9.970E-84	0.000E+00	8.070E-84	5.870E-84	1.810E-82	0.000E+00	7.740E-82
LA-140	2.330E+00	8.140E-01	0.000E+00	0.000E+00	0.000E+00	2.270E+04	0.000E+00	2.740E-01
LA-142	9.730E-12	3.100E-12	0.000E+00	0.000E+00	0.000E+00	6.140E-07	0.000E+00	9.710E-13
CE-141	2.620E+03	1.310E+03	0.000E+00	5.740E+02	0.000E+00	1.630E+06	0.000E+00	1.940E+02
CE-143	2.250E+01	1.220E+04	0.000E+00	5.120E+00	0.000E+00	1.790E+05	0.000E+00	1.770E+00
CE-144	1.950E+05	6.110E+04	0.000E+00	3.380E+04	0.000E+00	1.590E+07	0.000E+00	1.040E+04
PR-143	8.620E+01	2.590E+01	0.000E+00	1.400E+01	0.000E+00	9.300E+04	0.000E+00	4.280E+00
PR-144	3.220E-54	9.950E-55	0.000E+00	5.260E-55	0.000E+00	2.140E-51	0.000E+00	1.620E-55
ND-147	5.330E+01	4.320E+01	0.000E+00	2.370E+01	0.000E+00	6.850E+04	0.000E+00	3.350E+00
W-187	3.470E+03	2.050E+03	0.000E+00	0.000E+00	0.000E+00	2.880E+05	0.000E+00	9.210E+02
NP-239	2.070E+00	1.490E-01	0.000E+00	4.300E-01	0.000E+00	1.100E+04	0.000E+00	1.040E-01

APPENDIX I

R_i Child Dose Factors for use in the Gaseous Dose Calculations

Agegroup:	CHILD	Pathway:	Grs/Cow/Meat (CMEAT)			Units:	m^2·mrem/yr / mCi/sec; mrem/yr / mCi/m^3 (H-3)	
Nuclide	**Bone**	**Liver**	**Thyroid**	**Kidney**	**Lung**	**Gilli**	**Skin**	**Total Body**
H-3	0.000E+00	2.340E+02	2.340E+02	2.340E+02	2.340E+02	2.340E+02	0.000E+00	2.340E+02
C-14	3.830E+08	7.670E+07	7.670E+07	7.670E+07	7.670E+07	7.670E+07	0.000E+00	7.670E+07
NA-24	1.720E-03	1.720E-03	1.720E-03	1.720E-03	1.720E-03	1.720E-03	0.000E+00	1.720E-03
P-32	7.420E+09	3.470E+08	0.000E+00	0.000E+00	0.000E+00	2.050E+08	0.000E+00	2.860E+08
CR-51	0.000E+00	0.000E+00	4.880E+03	1.330E+03	8.910E+03	4.660E+05	0.000E+00	8.790E+03
MN-54	0.000E+00	8.010E+06	0.000E+00	2.250E+06	0.000E+00	6.720E+06	0.000E+00	2.130E+06
MN-56	0.000E+00	1.430E-53	0.000E+00	1.730E-53	0.000E+00	2.070E-51	0.000E+00	3.230E-54
FE-55	4.570E+08	2.420E+08	0.000E+00	0.000E+00	1.370E+08	4.490E+07	0.000E+00	7.510E+07
FE-59	3.760E+08	6.090E+08	0.000E+00	0.000E+00	1.770E+08	6.340E+08	0.000E+00	3.030E+08
CO-58	0.000E+00	1.640E+07	0.000E+00	0.000E+00	0.000E+00	9.580E+07	0.000E+00	5.020E+07
CO-60	0.000E+00	6.930E+07	0.000E+00	0.000E+00	0.000E+00	3.840E+08	0.000E+00	2.040E+08
NI-63	2.910E+10	1.560E+09	0.000E+00	0.000E+00	0.000E+00	1.050E+08	0.000E+00	9.910E+08
NI-65	3.520E-52	3.310E-53	0.000E+00	0.000E+00	0.000E+00	4.060E-51	0.000E+00	1.930E-53
CU-64	0.000E+00	2.970E-07	0.000E+00	7.180E-07	0.000E+00	1.390E-05	0.000E+00	1.800E-07
ZN-65	3.750E+08	1.000E+09	0.000E+00	6.300E+08	0.000E+00	1.760E+08	0.000E+00	6.220E+08
ZN-69	0.000E+00	0.000E+00	0.000E+00	0.000E+00	0.000E+00	0.000E+00	0.000E+00	0.000E+00
BR-83	0.000E+00	0.000E+00	0.000E+00	0.000E+00	0.000E+00	0.000E+00	0.000E+00	9.520E-57
BR-84	0.000E+00	0.000E+00	0.000E+00	0.000E+00	0.000E+00	0.000E+00	0.000E+00	0.000E+00
BR-85	0.000E+00	0.000E+00	0.000E+00	0.000E+00	0.000E+00	0.000E+00	0.000E+00	0.000E+00
RB-86	0.000E+00	5.770E+08	0.000E+00	0.000E+00	0.000E+00	3.710E+07	0.000E+00	3.550E+08
RB-88	0.000E+00	0.000E+00	0.000E+00	0.000E+00	0.000E+00	0.000E+00	0.000E+00	0.000E+00
RB-89	0.000E+00	0.000E+00	0.000E+00	0.000E+00	0.000E+00	0.000E+00	0.000E+00	0.000E+00
SR-89	4.820E+08	0.000E+00	0.000E+00	0.000E+00	0.000E+00	1.870E+07	0.000E+00	1.380E+07
SR-90	1.040E+10	0.000E+00	0.000E+00	0.000E+00	0.000E+00	1.400E+08	0.000E+00	2.640E+09
SR-91	2.400E-10	0.000E+00	0.000E+00	0.000E+00	0.000E+00	5.300E-10	0.000E+00	9.050E-12

APPENDIX I

R_i Child Dose Factors for use in the Gaseous Dose Calculations

Agegroup:	CHILD	Pathway:	Grs/Cow/Meat (CMEAT)			Units:	m^2·mrem/yr / mCi/sec; mrem/yr / mCi/m^3 (H-3)	
Nuclide	**Bone**	**Liver**	**Thyroid**	**Kidney**	**Lung**	**Gilli**	**Skin**	**Total Body**
SR-92	1.850E-49	0.000E+00	0.000E+00	0.000E+00	0.000E+00	3.490E-48	0.000E+00	7.400E-51
Y-90	1.710E+02	0.000E+00	0.000E+00	0.000E+00	0.000E+00	4.880E+05	0.000E+00	4.590E+00
Y-91	1.800E+06	0.000E+00	0.000E+00	0.000E+00	0.000E+00	2.400E+08	0.000E+00	4.820E+04
Y-91M	0.000E+00	0.000E+00	0.000E+00	0.000E+00	0.000E+00	0.000E+00	0.000E+00	0.000E+00
Y-92	2.410E-39	0.000E+00	0.000E+00	0.000E+00	0.000E+00	6.960E-35	0.000E+00	6.890E-41
Y-93	7.440E-12	0.000E+00	0.000E+00	0.000E+00	0.000E+00	1.110E-07	0.000E+00	2.040E-13
ZR-95	2.660E+06	5.850E+05	0.000E+00	8.380E+05	0.000E+00	6.110E+08	0.000E+00	5.210E+05
ZR-97	3.200E-05	4.630E-06	0.000E+00	6.650E-06	0.000E+00	7.010E-01	0.000E+00	2.730E-06
NB-95	3.100E+06	1.210E+06	0.000E+00	1.130E+06	0.000E+00	2.230E+09	0.000E+00	8.620E+05
MO-99	0.000E+00	1.150E+05	0.000E+00	2.460E+05	0.000E+00	9.510E+04	0.000E+00	2.840E+04
TC-99M	6.190E-21	1.210E-20	0.000E+00	1.760E-19	6.160E-21	6.910E-18	0.000E+00	2.010E-19
TC-101	0.000E+00	0.000E+00	0.000E+00	0.000E+00	0.000E+00	0.000E+00	0.000E+00	0.000E+00
RU-103	1.550E+08	0.000E+00	0.000E+00	3.900E+08	0.000E+00	4.010E+09	0.000E+00	5.960E+07
RU-105	9.020E-28	0.000E+00	0.000E+00	7.930E-27	0.000E+00	5.890E-25	0.000E+00	3.270E-28
RU-106	4.440E+09	0.000E+00	0.000E+00	5.990E+09	0.000E+00	6.900E+10	0.000E+00	5.540E+08
AG-110M	8.390E+06	5.670E+06	0.000E+00	1.060E+07	0.000E+00	6.740E+08	0.000E+00	4.530E+06
TE-125M	5.690E+08	1.540E+08	1.600E+08	0.000E+00	0.000E+00	5.490E+08	0.000E+00	7.590E+07
TE-127	3.380E-10	9.120E-11	2.340E-10	9.630E-10	0.000E+00	1.320E-08	0.000E+00	7.260E-11
TE-127M	1.770E+09	4.780E+08	4.240E+08	5.060E+09	0.000E+00	1.440E+09	0.000E+00	2.110E+08
TE-129	0.000E+00	0.000E+00	0.000E+00	0.000E+00	0.000E+00	0.000E+00	0.000E+00	0.000E+00
TE-129M	1.790E+09	5.000E+08	5.770E+08	5.260E+09	0.000E+00	2.180E+09	0.000E+00	2.780E+08
TE-131	0.000E+00	0.000E+00	0.000E+00	0.000E+00	0.000E+00	0.000E+00	0.000E+00	0.000E+00
TE-131M	7.000E+02	2.420E+02	4.980E+02	2.340E+03	0.000E+00	9.820E+03	0.000E+00	2.580E+02
TE-132	2.120E+06	9.380E+05	1.370E+06	8.710E+06	0.000E+00	9.450E+06	0.000E+00	1.130E+06
I-130	3.030E-06	6.130E-06	6.750E-04	9.160E-06	0.000E+00	2.870E-06	0.000E+00	3.160E-06

APPENDIX I

R_i Child Dose Factors for use in the Gaseous Dose Calculations

Agegroup:	CHILD	Pathway:	Grs/Cow/Meat (CMEAT)			Units:	m^2·mrem/yr / mCi/sec; mrem/yr / mCi/m^3 (H-3)	
Nuclide	**Bone**	**Liver**	**Thyroid**	**Kidney**	**Lung**	**Gilli**	**Skin**	**Total Body**
I-131	1.650E+07	1.660E+07	5.500E+09	2.730E+07	0.000E+00	1.480E+06	0.000E+00	9.460E+06
I-132	1.020E-58	1.880E-58	8.730E-57	2.880E-58	0.000E+00	2.210E-58	0.000E+00	8.650E-59
I-133	5.670E-01	7.020E-01	1.300E+02	1.170E+00	0.000E+00	2.830E-01	0.000E+00	2.660E-01
I-134	0.000E+00	0.000E+00	0.000E+00	0.000E+00	0.000E+00	0.000E+00	0.000E+00	0.000E+00
I-135	6.510E-17	1.170E-16	1.040E-14	1.800E-16	0.000E+00	8.930E-17	0.000E+00	5.550E-17
CS-134	9.220E+08	1.510E+09	0.000E+00	4.690E+08	1.680E+08	8.160E+06	0.000E+00	3.190E+08
CS-136	1.620E+07	4.460E+07	0.000E+00	2.370E+07	3.540E+06	1.570E+06	0.000E+00	2.880E+07
CS-137	1.330E+09	1.280E+09	0.000E+00	4.160E+08	1.500E+08	7.990E+06	0.000E+00	1.880E+08
CS-138	0.000E+00	0.000E+00	0.000E+00	0.000E+00	0.000E+00	0.000E+00	0.000E+00	0.000E+00
BA-139	0.000E+00	0.000E+00	0.000E+00	0.000E+00	0.000E+00	0.000E+00	0.000E+00	0.000E+00
BA-140	4.380E+07	3.840E+04	0.000E+00	1.250E+04	2.290E+04	2.220E+07	0.000E+00	2.560E+06
BA-141	0.000E+00	0.000E+00	0.000E+00	0.000E+00	0.000E+00	0.000E+00	0.000E+00	0.000E+00
BA-142	0.000E+00	0.000E+00	0.000E+00	0.000E+00	0.000E+00	0.000E+00	0.000E+00	0.000E+00
LA-140	5.590E-02	1.950E-02	0.000E+00	0.000E+00	0.000E+00	5.440E+02	0.000E+00	6.580E-03
LA-142	5.300E-92	1.690E-92	0.000E+00	0.000E+00	0.000E+00	3.350E-87	0.000E+00	5.290E-93
CE-141	2.220E+04	1.110E+04	0.000E+00	4.850E+03	0.000E+00	1.380E+07	0.000E+00	1.640E+03
CE-143	3.170E-02	1.720E+01	0.000E+00	7.210E-03	0.000E+00	2.520E+02	0.000E+00	2.490E-03
CE-144	2.320E+06	7.260E+05	0.000E+00	4.020E+05	0.000E+00	1.890E+08	0.000E+00	1.240E+05
PR-143	3.340E+04	1.000E+04	0.000E+00	5.430E+03	0.000E+00	3.600E+07	0.000E+00	1.660E+03
PR-144	0.000E+00	0.000E+00	0.000E+00	0.000E+00	0.000E+00	0.000E+00	0.000E+00	0.000E+00
ND-147	1.170E+04	9.470E+03	0.000E+00	5.190E+03	0.000E+00	1.500E+07	0.000E+00	7.330E+02
W-187	3.210E-02	1.900E-02	0.000E+00	0.000E+00	0.000E+00	2.670E+00	0.000E+00	8.530E-03
NP-239	4.260E-01	3.060E-02	0.000E+00	8.850E-02	0.000E+00	2.260E+03	0.000E+00	2.150E-02

APPENDIX I

R_i Child Dose Factors for use in the Gaseous Dose Calculations

Agegroup:	CHILD	Pathway:	Vegetation (VEG)			Units:	m^2·mrem/yr / mCi/sec; mrem/yr / mCi/m^3 (H-3)	
Nuclide	**Bone**	**Liver**	**Thyroid**	**Kidney**	**Lung**	**Gilli**	**Skin**	**Total Body**
H-3	0.000E+00	4.010E+03	4.010E+03	4.010E+03	4.010E+03	4.010E+03	0.000E+00	4.010E+03
C-14	8.890E+08	1.780E+08	1.780E+08	1.780E+08	1.780E+08	1.780E+08	0.000E+00	1.780E+08
NA-24	3.730E+05	3.730E+05	3.730E+05	3.730E+05	3.730E+05	3.730E+05	0.000E+00	3.730E+05
P-32	3.370E+09	1.580E+08	0.000E+00	0.000E+00	0.000E+00	9.310E+07	0.000E+00	1.300E+08
CR-51	0.000E+00	0.000E+00	6.500E+04	1.780E+04	1.190E+05	6.210E+06	0.000E+00	1.170E+05
MN-54	0.000E+00	6.650E+08	0.000E+00	1.860E+08	0.000E+00	5.580E+08	0.000E+00	1.770E+08
MN-56	0.000E+00	1.860E+01	0.000E+00	2.250E+01	0.000E+00	2.700E+03	0.000E+00	4.200E+00
FE-55	8.010E+08	4.250E+08	0.000E+00	0.000E+00	2.400E+08	7.870E+07	0.000E+00	1.320E+08
FE-59	3.980E+08	6.430E+08	0.000E+00	0.000E+00	1.860E+08	6.700E+08	0.000E+00	3.200E+08
CO-58	0.000E+00	6.440E+07	0.000E+00	0.000E+00	0.000E+00	3.760E+08	0.000E+00	1.970E+08
CO-60	0.000E+00	3.780E+08	0.000E+00	0.000E+00	0.000E+00	2.100E+09	0.000E+00	1.120E+09
NI-63	3.950E+10	2.110E+09	0.000E+00	0.000E+00	0.000E+00	1.420E+08	0.000E+00	1.340E+09
NI-65	1.050E+02	9.890E+00	0.000E+00	0.000E+00	0.000E+00	1.210E+03	0.000E+00	5.770E+00
CU-64	0.000E+00	1.100E+04	0.000E+00	2.660E+04	0.000E+00	5.160E+05	0.000E+00	6.640E+03
ZN-65	8.130E+08	2.160E+09	0.000E+00	1.360E+09	0.000E+00	3.800E+08	0.000E+00	1.350E+09
ZN-69	9.490E-06	1.370E-05	0.000E+00	8.320E-06	0.000E+00	8.640E-04	0.000E+00	1.270E-06
BR-83	0.000E+00	0.000E+00	0.000E+00	0.000E+00	0.000E+00	0.000E+00	0.000E+00	5.370E+00
BR-84	0.000E+00	0.000E+00	0.000E+00	0.000E+00	0.000E+00	0.000E+00	0.000E+00	3.820E-11
BR-85	0.000E+00	0.000E+00	0.000E+00	0.000E+00	0.000E+00	0.000E+00	0.000E+00	0.000E+00
RB-86	0.000E+00	4.520E+08	0.000E+00	0.000E+00	0.000E+00	2.910E+07	0.000E+00	2.780E+08
RB-88	0.000E+00	4.380E-22	0.000E+00	0.000E+00	0.000E+00	2.150E-23	0.000E+00	3.040E-22
RB-89	0.000E+00	4.610E-26	0.000E+00	0.000E+00	0.000E+00	4.020E-28	0.000E+00	4.090E-26
SR-89	3.600E+10	0.000E+00	0.000E+00	0.000E+00	0.000E+00	1.390E+09	0.000E+00	1.030E+09
SR-90	1.240E+12	0.000E+00	0.000E+00	0.000E+00	0.000E+00	1.670E+10	0.000E+00	3.150E+11
SR-91	5.240E+05	0.000E+00	0.000E+00	0.000E+00	0.000E+00	1.160E+06	0.000E+00	1.980E+04

APPENDIX I

R_i Child Dose Factors for use in the Gaseous Dose Calculations

Agegroup:	CHILD	Pathway:	Vegetation (VEG)			Units:	m^2·mrem/yr / mCi/sec; mrem/yr / mCi/m^3 (H-3)	
Nuclide	**Bone**	**Liver**	**Thyroid**	**Kidney**	**Lung**	**Gilli**	**Skin**	**Total Body**
SR-92	7.280E+02	0.000E+00	0.000E+00	0.000E+00	0.000E+00	1.380E+04	0.000E+00	2.920E+01
Y-90	2.310E+04	0.000E+00	0.000E+00	0.000E+00	0.000E+00	6.570E+07	0.000E+00	6.180E+02
Y-91	1.860E+07	0.000E+00	0.000E+00	0.000E+00	0.000E+00	2.480E+09	0.000E+00	4.990E+05
Y-91M	8.910E-09	0.000E+00	0.000E+00	0.000E+00	0.000E+00	1.740E-05	0.000E+00	3.240E-10
Y-92	1.580E+00	0.000E+00	0.000E+00	0.000E+00	0.000E+00	4.580E+04	0.000E+00	4.530E-02
Y-93	2.930E+02	0.000E+00	0.000E+00	0.000E+00	0.000E+00	4.370E+06	0.000E+00	8.040E+00
ZR-95	3.860E+06	8.480E+05	0.000E+00	1.210E+06	0.000E+00	8.850E+08	0.000E+00	7.550E+05
ZR-97	5.700E+02	8.240E+01	0.000E+00	1.180E+02	0.000E+00	1.250E+07	0.000E+00	4.860E+01
NB-95	4.110E+05	1.600E+05	0.000E+00	1.500E+05	0.000E+00	2.960E+08	0.000E+00	1.140E+05
MO-99	0.000E+00	7.710E+06	0.000E+00	1.650E+07	0.000E+00	6.380E+06	0.000E+00	1.910E+06
TC-99M	4.710E+00	9.230E+00	0.000E+00	1.340E+02	4.690E+00	5.260E+03	0.000E+00	1.530E+02
TC-101	1.410E-30	1.470E-30	0.000E+00	2.510E-29	7.780E-31	4.680E-30	0.000E+00	1.870E-29
RU-103	1.530E+07	0.000E+00	0.000E+00	3.860E+07	0.000E+00	3.970E+08	0.000E+00	5.900E+06
RU-105	9.160E+01	0.000E+00	0.000E+00	8.050E+02	0.000E+00	5.980E+04	0.000E+00	3.320E+01
RU-106	7.450E+08	0.000E+00	0.000E+00	1.010E+09	0.000E+00	1.160E+10	0.000E+00	9.300E+07
AG-110M	3.210E+07	2.170E+07	0.000E+00	4.040E+07	0.000E+00	2.580E+09	0.000E+00	1.730E+07
TE-125M	3.510E+08	9.500E+07	9.840E+07	0.000E+00	0.000E+00	3.380E+08	0.000E+00	4.670E+07
TE-127	9.850E+03	2.650E+03	6.810E+03	2.800E+04	0.000E+00	3.850E+05	0.000E+00	2.110E+03
TE-127M	1.320E+09	3.560E+08	3.160E+08	3.770E+09	0.000E+00	1.070E+09	0.000E+00	1.570E+08
TE-129	1.320E-03	3.690E-04	9.430E-04	3.870E-03	0.000E+00	8.230E-02	0.000E+00	3.140E-04
TE-129M	8.410E+08	2.350E+08	2.710E+08	2.470E+09	0.000E+00	1.030E+09	0.000E+00	1.310E+08
TE-131	2.570E-15	7.830E-16	1.960E-15	7.770E-15	0.000E+00	1.350E-14	0.000E+00	7.640E-16
TE-131M	1.540E+06	5.330E+05	1.100E+06	5.160E+06	0.000E+00	2.160E+07	0.000E+00	5.680E+05
TE-132	7.000E+06	3.100E+06	4.510E+06	2.880E+07	0.000E+00	3.120E+07	0.000E+00	3.740E+06
I-130	6.160E+05	1.240E+06	1.370E+08	1.860E+06	0.000E+00	5.820E+05	0.000E+00	6.410E+05

APPENDIX I

R_i Child Dose Factors for use in the Gaseous Dose Calculations

Agegroup:	CHILD	Pathway:	Vegetation (VEG)			Units:	m^2·mrem/yr / mCi/sec; mrem/yr / mCi/m^3 (H-3)	
Nuclide	**Bone**	**Liver**	**Thyroid**	**Kidney**	**Lung**	**Gilli**	**Skin**	**Total Body**
I-131	1.430E+08	1.440E+08	4.750E+10	2.360E+08	0.000E+00	1.280E+07	0.000E+00	8.170E+07
I-132	9.220E+01	1.690E+02	7.860E+03	2.590E+02	0.000E+00	1.990E+02	0.000E+00	7.790E+01
I-133	3.530E+06	4.370E+06	8.110E+08	7.280E+06	0.000E+00	1.760E+06	0.000E+00	1.650E+06
I-134	1.550E-04	2.880E-04	6.620E-03	4.400E-04	0.000E+00	1.910E-04	0.000E+00	1.320E-04
I-135	6.260E+04	1.130E+05	9.970E+06	1.730E+05	0.000E+00	8.580E+04	0.000E+00	5.330E+04
CS-134	1.600E+10	2.630E+10	0.000E+00	8.150E+09	2.930E+09	1.420E+08	0.000E+00	5.550E+09
CS-136	8.240E+07	2.270E+08	0.000E+00	1.210E+08	1.800E+07	7.960E+06	0.000E+00	1.470E+08
CS-137	2.390E+10	2.290E+10	0.000E+00	7.460E+09	2.680E+09	1.430E+08	0.000E+00	3.380E+09
CS-138	6.570E-11	9.130E-11	0.000E+00	6.430E-11	6.920E-12	4.210E-11	0.000E+00	5.790E-11
BA-139	4.950E-02	2.640E-05	0.000E+00	2.310E-05	1.560E-05	2.860E+00	0.000E+00	1.440E-03
BA-140	2.770E+08	2.420E+05	0.000E+00	7.890E+04	1.450E+05	1.400E+08	0.000E+00	1.610E+07
BA-141	1.990E-21	1.110E-24	0.000E+00	9.620E-25	6.530E-24	1.130E-21	0.000E+00	6.460E-23
BA-142	9.930E-39	7.150E-42	0.000E+00	5.780E-42	4.200E-42	1.300E-40	0.000E+00	5.540E-40
LA-140	3.250E+03	1.130E+03	0.000E+00	0.000E+00	0.000E+00	3.160E+07	0.000E+00	3.820E+02
LA-142	3.360E-04	1.070E-04	0.000E+00	0.000E+00	0.000E+00	2.120E+01	0.000E+00	3.350E-05
CE-141	6.560E+05	3.270E+05	0.000E+00	1.430E+05	0.000E+00	4.080E+08	0.000E+00	4.860E+04
CE-143	1.720E+03	9.310E+05	0.000E+00	3.910E+02	0.000E+00	1.360E+07	0.000E+00	1.350E+02
CE-144	1.270E+08	3.980E+07	0.000E+00	2.210E+07	0.000E+00	1.040E+10	0.000E+00	6.780E+06
PR-143	1.460E+05	4.370E+04	0.000E+00	2.370E+04	0.000E+00	1.570E+08	0.000E+00	7.230E+03
PR-144	5.380E-26	1.660E-26	0.000E+00	8.800E-27	0.000E+00	3.580E-23	0.000E+00	2.710E-27
ND-147	7.150E+04	5.790E+04	0.000E+00	3.180E+04	0.000E+00	9.170E+07	0.000E+00	4.480E+03
W-187	6.430E+04	3.810E+04	0.000E+00	0.000E+00	0.000E+00	5.350E+06	0.000E+00	1.710E+04
NP-239	2.560E+03	1.840E+02	0.000E+00	5.310E+02	0.000E+00	1.360E+07	0.000E+00	1.290E+02

APPENDIX I

R_i Child Dose Factors for use in the Gaseous Dose Calculations

Agegroup:	CHILD	Pathway:	Inhalation (INHL)			Units:	mrem/yr / mCi/m^3	
Nuclide	**Bone**	**Liver**	**Thyroid**	**Kidney**	**Lung**	**Gilli**	**Skin**	**Total Body**
H-3	0.000E+00	1.120E+03	1.120E+03	1.120E+03	1.120E+03	1.120E+03	0.000E+00	1.120E+03
C-14	3.590E+04	6.730E+03	6.730E+03	6.730E+03	6.730E+03	6.730E+03	0.000E+00	6.730E+03
NA-24	1.610E+04	1.610E+04	1.610E+04	1.610E+04	1.610E+04	1.610E+04	0.000E+00	1.610E+04
P-32	2.600E+06	1.140E+05	0.000E+00	0.000E+00	0.000E+00	4.220E+04	0.000E+00	9.880E+04
CR-51	0.000E+00	0.000E+00	8.550E+01	2.430E+01	1.700E+04	1.080E+03	0.000E+00	1.540E+02
MN-54	0.000E+00	4.290E+04	0.000E+00	1.000E+04	1.580E+06	2.290E+04	0.000E+00	9.510E+03
MN-56	0.000E+00	1.660E+00	0.000E+00	1.670E+00	1.310E+04	1.230E+05	0.000E+00	3.120E-01
FE-55	4.740E+04	2.520E+04	0.000E+00	0.000E+00	1.110E+05	2.870E+03	0.000E+00	7.770E+03
FE-59	2.070E+04	3.340E+04	0.000E+00	0.000E+00	1.270E+06	7.070E+04	0.000E+00	1.670E+04
CO-58	0.000E+00	1.770E+03	0.000E+00	0.000E+00	1.110E+06	3.440E+04	0.000E+00	3.160E+03
CO-60	0.000E+00	1.310E+04	0.000E+00	0.000E+00	7.070E+06	9.620E+04	0.000E+00	2.260E+04
NI-63	8.210E+05	4.620E+04	0.000E+00	0.000E+00	2.750E+05	6.330E+03	0.000E+00	2.800E+04
NI-65	2.990E+00	2.960E-01	0.000E+00	0.000E+00	8.180E+03	8.400E+04	0.000E+00	1.640E-01
CU-64	0.000E+00	1.990E+00	0.000E+00	6.030E+00	9.580E+03	3.670E+04	0.000E+00	1.070E+00
ZN-65	4.260E+04	1.130E+05	0.000E+00	7.140E+04	9.950E+05	1.630E+04	0.000E+00	7.030E+04
ZN-69	6.700E-02	9.660E-02	0.000E+00	5.850E-02	1.420E+03	1.020E+04	0.000E+00	8.920E-03
BR-83	0.000E+00	0.000E+00	0.000E+00	0.000E+00	0.000E+00	0.000E+00	0.000E+00	4.740E+02
BR-84	0.000E+00	0.000E+00	0.000E+00	0.000E+00	0.000E+00	0.000E+00	0.000E+00	5.480E+02
BR-85	0.000E+00	0.000E+00	0.000E+00	0.000E+00	0.000E+00	0.000E+00	0.000E+00	2.530E+01
RB-86	0.000E+00	1.980E+05	0.000E+00	0.000E+00	0.000E+00	7.990E+03	0.000E+00	1.140E+05
RB-88	0.000E+00	5.620E+02	0.000E+00	0.000E+00	0.000E+00	1.720E+01	0.000E+00	3.660E+02
RB-89	0.000E+00	3.450E+02	0.000E+00	0.000E+00	0.000E+00	1.890E+00	0.000E+00	2.900E+02
SR-89	5.990E+05	0.000E+00	0.000E+00	0.000E+00	2.160E+06	1.670E+05	0.000E+00	1.720E+04
SR-90	1.010E+08	0.000E+00	0.000E+00	0.000E+00	1.480E+07	3.430E+05	0.000E+00	6.440E+06
SR-91	1.210E+02	0.000E+00	0.000E+00	0.000E+00	5.330E+04	1.740E+05	0.000E+00	4.590E+00

APPENDIX I

R_i Child Dose Factors for use in the Gaseous Dose Calculations

Agegroup:	CHILD	Pathway:	Inhalation (INHL)			Units:	mrem/yr / mCi/m^3	
Nuclide	**Bone**	**Liver**	**Thyroid**	**Kidney**	**Lung**	**Gilli**	**Skin**	**Total Body**
SR-92	1.310E+01	0.000E+00	0.000E+00	0.000E+00	2.400E+04	2.420E+05	0.000E+00	5.250E-01
Y-90	4.110E+03	0.000E+00	0.000E+00	0.000E+00	2.620E+05	2.680E+05	0.000E+00	1.110E+02
Y-91	9.140E+05	0.000E+00	0.000E+00	0.000E+00	2.630E+06	1.840E+05	0.000E+00	2.440E+04
Y-91M	5.070E-01	0.000E+00	0.000E+00	0.000E+00	2.810E+03	1.720E+03	0.000E+00	1.840E-02
Y-92	2.030E+01	0.000E+00	0.000E+00	0.000E+00	2.390E+04	2.390E+05	0.000E+00	5.810E-01
Y-93	1.860E+02	0.000E+00	0.000E+00	0.000E+00	7.440E+04	3.880E+05	0.000E+00	5.110E+00
ZR-95	1.900E+05	4.180E+04	0.000E+00	5.960E+04	2.230E+06	6.110E+04	0.000E+00	3.700E+04
ZR-97	1.880E+02	2.720E+01	0.000E+00	3.880E+01	1.130E+05	3.510E+05	0.000E+00	1.600E+01
NB-95	2.350E+04	9.180E+03	0.000E+00	8.620E+03	6.140E+05	3.700E+04	0.000E+00	6.550E+03
MO-99	0.000E+00	1.720E+02	0.000E+00	3.920E+02	1.350E+05	1.270E+05	0.000E+00	4.260E+01
TC-99M	1.780E-03	3.480E-03	0.000E+00	5.070E-02	9.510E+02	4.810E+03	0.000E+00	5.770E-02
TC-101	8.100E-05	8.510E-05	0.000E+00	1.450E-03	5.850E+02	1.630E+01	0.000E+00	1.080E-03
RU-103	2.790E+03	0.000E+00	0.000E+00	7.030E+03	6.620E+05	4.480E+04	0.000E+00	1.070E+03
RU-105	1.530E+00	0.000E+00	0.000E+00	1.340E+00	1.590E+04	9.950E+04	0.000E+00	5.550E-01
RU-106	1.360E+05	0.000E+00	0.000E+00	1.840E+05	1.430E+07	4.290E+05	0.000E+00	1.690E+04
AG-110M	1.690E+04	1.140E+04	0.000E+00	2.120E+04	5.480E+06	1.000E+05	0.000E+00	9.140E+03
TE-125M	6.730E+03	2.330E+03	1.920E+03	0.000E+00	4.770E+05	3.380E+04	0.000E+00	9.140E+02
TE-127	2.770E+00	9.510E-01	1.960E+00	7.070E+00	1.000E+04	5.620E+04	0.000E+00	6.100E-01
TE-127M	2.490E+04	8.550E+03	6.070E+03	6.360E+04	1.480E+06	7.140E+04	0.000E+00	3.020E+03
TE-129	9.770E-02	3.500E-02	7.140E-02	2.570E-01	2.930E+03	2.550E+04	0.000E+00	2.380E-02
TE-129M	1.920E+04	6.840E+03	6.330E+03	5.030E+04	1.760E+06	1.820E+05	0.000E+00	3.040E+03
TE-131	2.170E-02	8.440E-03	1.700E-02	5.880E-02	2.050E+03	1.330E+03	0.000E+00	6.590E-03
TE-131M	1.340E+02	5.920E+01	9.770E+01	4.000E+02	2.060E+05	3.080E+05	0.000E+00	5.070E+01
TE-132	4.810E+02	2.720E+02	3.170E+02	1.770E+03	3.770E+05	1.380E+05	0.000E+00	2.630E+02
I-130	8.180E+03	1.640E+04	1.850E+06	2.450E+04	0.000E+00	5.110E+03	0.000E+00	8.440E+03

APPENDIX I

R_i Child Dose Factors for use in the Gaseous Dose Calculations

Agegroup:	CHILD	Pathway:	Inhalation (INHL)			Units:	mrem/yr / mCi/m^3	
Nuclide	**Bone**	**Liver**	**Thyroid**	**Kidney**	**Lung**	**Gilli**	**Skin**	**Total Body**
I-131	4.810E+04	4.810E+04	1.620E+07	7.880E+04	0.000E+00	2.840E+03	0.000E+00	2.730E+04
I-132	2.120E+03	4.070E+03	1.940E+05	6.250E+03	0.000E+00	3.200E+03	0.000E+00	1.880E+03
I-133	1.660E+04	2.030E+04	3.850E+06	3.380E+04	0.000E+00	5.480E+03	0.000E+00	7.700E+03
I-134	1.170E+03	2.160E+03	5.070E+04	3.300E+03	0.000E+00	9.550E+02	0.000E+00	9.950E+02
I-135	4.920E+03	8.730E+03	7.920E+05	1.340E+04	0.000E+00	4.440E+03	0.000E+00	4.140E+03
CS-134	6.510E+05	1.010E+06	0.000E+00	3.300E+05	1.210E+05	3.850E+03	0.000E+00	2.250E+05
CS-136	6.510E+04	1.710E+05	0.000E+00	9.550E+04	1.450E+04	4.180E+03	0.000E+00	1.160E+05
CS-137	9.060E+05	8.250E+05	0.000E+00	2.820E+05	1.040E+05	3.620E+03	0.000E+00	1.280E+05
CS-138	6.330E+02	8.400E+02	0.000E+00	6.220E+02	6.810E+01	2.700E+02	0.000E+00	5.550E+02
BA-139	1.840E+00	9.840E-04	0.000E+00	8.620E-04	5.770E+03	5.770E+04	0.000E+00	5.360E-02
BA-140	7.400E+04	6.480E+01	0.000E+00	2.110E+01	1.740E+06	1.020E+05	0.000E+00	4.330E+03
BA-141	1.960E-01	1.090E-04	0.000E+00	9.470E-05	2.920E+03	2.750E+02	0.000E+00	6.360E-03
BA-142	5.000E-02	3.600E-05	0.000E+00	2.910E-05	1.640E+03	2.740E+00	0.000E+00	2.790E-03
LA-140	6.440E+02	2.250E+02	0.000E+00	0.000E+00	1.830E+05	2.260E+05	0.000E+00	7.550E+01
LA-142	1.300E+00	4.110E-01	0.000E+00	0.000E+00	8.700E+03	7.580E+04	0.000E+00	1.290E-01
CE-141	3.920E+04	1.950E+04	0.000E+00	8.550E+03	5.440E+05	5.660E+04	0.000E+00	2.900E+03
CE-143	3.660E+02	1.990E+02	0.000E+00	8.360E+01	1.150E+05	1.270E+05	0.000E+00	2.870E+01
CE-144	6.770E+06	2.120E+06	0.000E+00	1.170E+06	1.200E+07	3.880E+05	0.000E+00	3.610E+05
PR-143	1.850E+04	5.550E+03	0.000E+00	3.000E+03	4.330E+05	9.730E+04	0.000E+00	9.140E+02
PR-144	5.960E-02	1.850E-02	0.000E+00	9.770E-03	1.570E+03	1.970E+02	0.000E+00	3.000E-03
ND-147	1.080E+04	8.730E+03	0.000E+00	4.810E+03	3.280E+05	8.210E+04	0.000E+00	6.810E+02
W-187	1.630E+01	9.660E+00	0.000E+00	0.000E+00	4.110E+04	9.100E+04	0.000E+00	4.330E+00
NP-239	4.660E+02	3.340E+01	0.000E+00	9.730E+01	5.810E+04	6.400E+04	0.000E+00	2.350E+01

APPENDIX I

R_i Child Dose Factors for use in the Gaseous Dose Calculations

Agegroup:	CHILD	Pathway:	Ground Plane Deposition (GPD)			Units:	m^2·mrem/yr / mCi/sec	
Nuclide	**Bone**	**Liver**	**Thyroid**	**Kidney**	**Lung**	**Gilli**	**Skin**	**Total Body**
H-3	0.000E+00	0.000E+00	0.000E+00	0.000E+00	0.000E+00	0.000E+00	0.000E+00	0.000E+00
C-14	0.000E+00	0.000E+00	0.000E+00	0.000E+00	0.000E+00	0.000E+00	0.000E+00	0.000E+00
NA-24	1.190E+07	1.190E+07	1.190E+07	1.190E+07	1.190E+07	1.190E+07	1.390E+07	1.190E+07
P-32	0.000E+00	0.000E+00	0.000E+00	0.000E+00	0.000E+00	0.000E+00	0.000E+00	0.000E+00
CR-51	4.660E+06	4.660E+06	4.660E+06	4.660E+06	4.660E+06	4.660E+06	5.510E+06	4.660E+06
MN-54	1.390E+09	1.390E+09	1.390E+09	1.390E+09	1.390E+09	1.390E+09	1.630E+09	1.390E+09
MN-56	9.020E+05	9.020E+05	9.020E+05	9.020E+05	9.020E+05	9.020E+05	1.070E+06	9.020E+05
FE-55	0.000E+00	0.000E+00	0.000E+00	0.000E+00	0.000E+00	0.000E+00	0.000E+00	0.000E+00
FE-59	2.730E+08	2.730E+08	2.730E+08	2.730E+08	2.730E+08	2.730E+08	3.210E+08	2.730E+08
CO-58	3.790E+08	3.790E+08	3.790E+08	3.790E+08	3.790E+08	3.790E+08	4.440E+08	3.790E+08
CO-60	2.150E+10	2.150E+10	2.150E+10	2.150E+10	2.150E+10	2.150E+10	2.530E+10	2.150E+10
NI-63	0.000E+00	0.000E+00	0.000E+00	0.000E+00	0.000E+00	0.000E+00	0.000E+00	0.000E+00
NI-65	2.970E+05	2.970E+05	2.970E+05	2.970E+05	2.970E+05	2.970E+05	3.450E+05	2.970E+05
CU-64	6.070E+05	6.070E+05	6.070E+05	6.070E+05	6.070E+05	6.070E+05	6.880E+05	6.070E+05
ZN-65	7.470E+08	7.470E+08	7.470E+08	7.470E+08	7.470E+08	7.470E+08	8.590E+08	7.470E+08
ZN-69	0.000E+00	0.000E+00	0.000E+00	0.000E+00	0.000E+00	0.000E+00	0.000E+00	0.000E+00
BR-83	4.870E+03	4.870E+03	4.870E+03	4.870E+03	4.870E+03	4.870E+03	7.080E+03	4.870E+03
BR-84	2.030E+05	2.030E+05	2.030E+05	2.030E+05	2.030E+05	2.030E+05	2.360E+05	2.030E+05
BR-85	0.000E+00	0.000E+00	0.000E+00	0.000E+00	0.000E+00	0.000E+00	0.000E+00	0.000E+00
RB-86	8.990E+06	8.990E+06	8.990E+06	8.990E+06	8.990E+06	8.990E+06	1.030E+07	8.990E+06
RB-88	3.310E+04	3.310E+04	3.310E+04	3.310E+04	3.310E+04	3.310E+04	3.780E+04	3.310E+04
RB-89	1.230E+05	1.230E+05	1.230E+05	1.230E+05	1.230E+05	1.230E+05	1.480E+05	1.230E+05
SR-89	2.160E+04	2.160E+04	2.160E+04	2.160E+04	2.160E+04	2.160E+04	2.510E+04	2.160E+04
SR-90	0.000E+00	0.000E+00	0.000E+00	0.000E+00	0.000E+00	0.000E+00	0.000E+00	0.000E+00
SR-91	2.150E+06	2.150E+06	2.150E+06	2.150E+06	2.150E+06	2.150E+06	2.510E+06	2.150E+06

APPENDIX I

R_i Child Dose Factors for use in the Gaseous Dose Calculations

Agegroup:	CHILD	Pathway:	Ground Plane Deposition (GPD)			Units:	m^2·mrem/yr / mCi/sec	
Nuclide	**Bone**	**Liver**	**Thyroid**	**Kidney**	**Lung**	**Gilli**	**Skin**	**Total Body**
SR-92	7.770E+05	7.770E+05	7.770E+05	7.770E+05	7.770E+05	7.770E+05	8.630E+05	7.770E+05
Y-90	4.490E+03	4.490E+03	4.490E+03	4.490E+03	4.490E+03	4.490E+03	5.310E+03	4.490E+03
Y-91	1.070E+06	1.070E+06	1.070E+06	1.070E+06	1.070E+06	1.070E+06	1.210E+06	1.070E+06
Y-91M	1.000E+05	1.000E+05	1.000E+05	1.000E+05	1.000E+05	1.000E+05	1.160E+05	1.000E+05
Y-92	1.800E+05	1.800E+05	1.800E+05	1.800E+05	1.800E+05	1.800E+05	2.140E+05	1.800E+05
Y-93	1.830E+05	1.830E+05	1.830E+05	1.830E+05	1.830E+05	1.830E+05	2.510E+05	1.830E+05
ZR-95	2.450E+08	2.450E+08	2.450E+08	2.450E+08	2.450E+08	2.450E+08	2.840E+08	2.450E+08
ZR-97	2.960E+06	2.960E+06	2.960E+06	2.960E+06	2.960E+06	2.960E+06	3.440E+06	2.960E+06
NB-95	1.370E+08	1.370E+08	1.370E+08	1.370E+08	1.370E+08	1.370E+08	1.610E+08	1.370E+08
MO-99	3.990E+06	3.990E+06	3.990E+06	3.990E+06	3.990E+06	3.990E+06	4.630E+06	3.990E+06
TC-99M	1.840E+05	1.840E+05	1.840E+05	1.840E+05	1.840E+05	1.840E+05	2.110E+05	1.840E+05
TC-101	2.040E+04	2.040E+04	2.040E+04	2.040E+04	2.040E+04	2.040E+04	2.260E+04	2.040E+04
RU-103	1.080E+08	1.080E+08	1.080E+08	1.080E+08	1.080E+08	1.080E+08	1.260E+08	1.080E+08
RU-105	6.360E+05	6.360E+05	6.360E+05	6.360E+05	6.360E+05	6.360E+05	7.210E+05	6.360E+05
RU-106	4.220E+08	4.220E+08	4.220E+08	4.220E+08	4.220E+08	4.220E+08	5.070E+08	4.220E+08
AG-110M	3.440E+09	3.440E+09	3.440E+09	3.440E+09	3.440E+09	3.440E+09	4.010E+09	3.440E+09
TE-125M	1.550E+06	1.550E+06	1.550E+06	1.550E+06	1.550E+06	1.550E+06	2.130E+06	1.550E+06
TE-127	2.980E+03	2.980E+03	2.980E+03	2.980E+03	2.980E+03	2.980E+03	3.280E+03	2.980E+03
TE-127M	9.160E+04	9.160E+04	9.160E+04	9.160E+04	9.160E+04	9.160E+04	1.080E+05	9.160E+04
TE-129	2.620E+04	2.620E+04	2.620E+04	2.620E+04	2.620E+04	2.620E+04	3.100E+04	2.620E+04
TE-129M	1.980E+07	1.980E+07	1.980E+07	1.980E+07	1.980E+07	1.980E+07	2.310E+07	1.980E+07
TE-131	2.920E+04	2.920E+04	2.920E+04	2.920E+04	2.920E+04	2.920E+04	3.450E+07	2.920E+04
TE-131M	8.030E+06	8.030E+06	8.030E+06	8.030E+06	8.030E+06	8.030E+06	9.460E+06	8.030E+06
TE-132	4.230E+06	4.230E+06	4.230E+06	4.230E+06	4.230E+06	4.230E+06	4.980E+06	4.230E+06
I-130	5.510E+06	5.510E+06	5.510E+06	5.510E+06	5.510E+06	5.510E+06	6.690E+06	5.510E+06

APPENDIX I

R_i Child Dose Factors for use in the Gaseous Dose Calculations

Agegroup:	CHILD	Pathway:	Ground Plane Deposition (GPD)			Units:	m^2·mrem/yr / mCi/sec	
Nuclide	**Bone**	**Liver**	**Thyroid**	**Kidney**	**Lung**	**Gilli**	**Skin**	**Total Body**
I-131	1.720E+07	1.720E+07	1.720E+07	1.720E+07	1.720E+07	1.720E+07	2.090E+07	1.720E+07
I-132	1.250E+06	1.250E+06	1.250E+06	1.250E+06	1.250E+06	1.250E+06	1.470E+06	1.250E+06
I-133	2.450E+06	2.450E+06	2.450E+06	2.450E+06	2.450E+06	2.450E+06	2.980E+06	2.450E+06
I-134	4.470E+05	4.470E+05	4.470E+05	4.470E+05	4.470E+05	4.470E+05	5.300E+05	4.470E+05
I-135	2.530E+06	2.530E+06	2.530E+06	2.530E+06	2.530E+06	2.530E+06	2.950E+06	2.530E+06
CS-134	6.860E+09	6.860E+09	6.860E+09	6.860E+09	6.860E+09	6.860E+09	8.000E+09	6.860E+09
CS-136	1.510E+08	1.510E+08	1.510E+08	1.510E+08	1.510E+08	1.510E+08	1.710E+08	1.510E+08
CS-137	1.030E+10	1.030E+10	1.030E+10	1.030E+10	1.030E+10	1.030E+10	1.200E+10	1.030E+10
CS-138	3.590E+05	3.590E+05	3.590E+05	3.590E+05	3.590E+05	3.590E+05	4.100E+05	3.590E+05
BA-139	1.060E+05	1.060E+05	1.060E+05	1.060E+05	1.060E+05	1.060E+05	1.190E+05	1.060E+05
BA-140	2.050E+07	2.050E+07	2.050E+07	2.050E+07	2.050E+07	2.050E+07	2.350E+07	2.050E+07
BA-141	4.170E+04	4.170E+04	4.170E+04	4.170E+04	4.170E+04	4.170E+04	4.750E+04	4.170E+04
BA-142	4.490E+04	4.490E+04	4.490E+04	4.490E+04	4.490E+04	4.490E+04	5.110E+04	4.490E+04
LA-140	1.920E+07	1.920E+07	1.920E+07	1.920E+07	1.920E+07	1.920E+07	2.180E+07	1.920E+07
LA-142	7.600E+05	7.600E+05	7.600E+05	7.600E+05	7.600E+05	7.600E+05	9.120E+05	7.600E+05
CE-141	1.370E+07	1.370E+07	1.370E+07	1.370E+07	1.370E+07	1.370E+07	1.540E+07	1.370E+07
CE-143	2.310E+06	2.310E+06	2.310E+06	2.310E+06	2.310E+06	2.310E+06	2.630E+06	2.310E+06
CE-144	6.950E+07	6.950E+07	6.950E+07	6.950E+07	6.950E+07	6.950E+07	8.040E+07	6.950E+07
PR-143	0.000E+00	0.000E+00	0.000E+00	0.000E+00	0.000E+00	0.000E+00	0.000E+00	0.000E+00
PR-144	1.830E+03	1.830E+03	1.830E+03	1.830E+03	1.830E+03	1.830E+03	2.110E+03	1.830E+03
ND-147	8.390E+06	8.390E+06	8.390E+06	8.390E+06	8.390E+06	8.390E+06	1.010E+07	8.390E+06
W-187	2.350E+06	2.350E+06	2.350E+06	2.350E+06	2.350E+06	2.350E+06	2.730E+06	2.350E+06
NP-239	1.710E+06	1.710E+06	1.710E+06	1.710E+06	1.710E+06	1.710E+06	1.980E+06	1.710E+06

APPENDIX J

R_i Infant Dose Factors for use in the Gaseous Dose Calculations

Agegroup:	INFANT	Pathway:	Grs/Cow/Milk (CMILK)			Units:	m^2·mrem/yr / mCi/sec; mrem/yr / mCi/m^3 (H-3)	
Nuclide	**Bone**	**Liver**	**Thyroid**	**Kidney**	**Lung**	**Gilli**	**Skin**	**Total Body**
H-3	0.000E+00	2.380E+03	2.380E+03	2.380E+03	2.380E+03	2.380E+03	0.000E+00	2.380E+03
C-14	2.340E+09	5.000E+08	5.000E+08	5.000E+08	5.000E+08	5.000E+08	0.000E+00	5.000E+08
NA-24	1.540E+07	1.540E+07	1.540E+07	1.540E+07	1.540E+07	1.540E+07	0.000E+00	1.540E+07
P-32	1.600E+11	9.430E+09	0.000E+00	0.000E+00	0.000E+00	2.170E+09	0.000E+00	6.210E+09
CR-51	0.000E+00	0.000E+00	1.050E+05	2.300E+04	2.050E+05	4.700E+06	0.000E+00	1.610E+05
MN-54	0.000E+00	3.900E+07	0.000E+00	8.640E+06	0.000E+00	1.430E+07	0.000E+00	8.840E+06
MN-56	0.000E+00	3.100E-02	0.000E+00	2.660E-02	0.000E+00	2.810E+00	0.000E+00	5.340E-03
FE-55	1.350E+08	8.730E+07	0.000E+00	0.000E+00	4.270E+07	1.110E+07	0.000E+00	2.330E+07
FE-59	2.240E+08	3.920E+08	0.000E+00	0.000E+00	1.160E+08	1.870E+08	0.000E+00	1.540E+08
CO-58	0.000E+00	2.420E+07	0.000E+00	0.000E+00	0.000E+00	6.040E+07	0.000E+00	6.050E+07
CO-60	0.000E+00	8.820E+07	0.000E+00	0.000E+00	0.000E+00	2.100E+08	0.000E+00	2.080E+08
NI-63	3.490E+10	2.160E+09	0.000E+00	0.000E+00	0.000E+00	1.070E+08	0.000E+00	1.210E+09
NI-65	3.510E+00	3.970E-01	0.000E+00	0.000E+00	0.000E+00	3.020E+01	0.000E+00	1.800E-01
CU-64	0.000E+00	1.850E+05	0.000E+00	3.140E+05	0.000E+00	3.810E+06	0.000E+00	8.590E+04
ZN-65	5.550E+09	1.900E+10	0.000E+00	9.230E+09	0.000E+00	1.610E+10	0.000E+00	8.780E+09
ZN-69	2.020E-11	3.630E-11	0.000E+00	1.510E-11	0.000E+00	2.960E-09	0.000E+00	2.700E-12
BR-83	0.000E+00	0.000E+00	0.000E+00	0.000E+00	0.000E+00	0.000E+00	0.000E+00	9.340E-01
BR-84	0.000E+00	0.000E+00	0.000E+00	0.000E+00	0.000E+00	0.000E+00	0.000E+00	1.260E-22
BR-85	0.000E+00	0.000E+00	0.000E+00	0.000E+00	0.000E+00	0.000E+00	0.000E+00	0.000E+00
RB-86	0.000E+00	2.230E+10	0.000E+00	0.000E+00	0.000E+00	5.690E+08	0.000E+00	1.100E+10
RB-88	0.000E+00	1.880E-44	0.000E+00	0.000E+00	0.000E+00	1.830E-44	0.000E+00	1.030E-44
RB-89	0.000E+00	3.290E-52	0.000E+00	0.000E+00	0.000E+00	1.120E-52	0.000E+00	2.260E-52
SR-89	1.260E+10	0.000E+00	0.000E+00	0.000E+00	0.000E+00	2.590E+08	0.000E+00	3.610E+08
SR-90	1.220E+11	0.000E+00	0.000E+00	0.000E+00	0.000E+00	1.520E+09	0.000E+00	3.100E+10
SR-91	2.720E+05	0.000E+00	0.000E+00	0.000E+00	0.000E+00	3.220E+05	0.000E+00	9.830E+03

APPENDIX J

R_i Infant Dose Factors for use in the Gaseous Dose Calculations

Agegroup:	INFANT	Pathway:	Grs/Cow/Milk (CMILK)			Units:	m^2·mrem/yr / mCi/sec; mrem/yr / mCi/m^3 (H-3)	
Nuclide	**Bone**	**Liver**	**Thyroid**	**Kidney**	**Lung**	**Gilli**	**Skin**	**Total Body**
SR-92	4.640E+00	0.000E+00	0.000E+00	0.000E+00	0.000E+00	5.000E+01	0.000E+00	1.720E-01
Y-90	6.810E+02	0.000E+00	0.000E+00	0.000E+00	0.000E+00	9.410E+05	0.000E+00	1.830E+01
Y-91	7.330E+04	0.000E+00	0.000E+00	0.000E+00	0.000E+00	5.250E+06	0.000E+00	1.950E+03
Y-91M	5.670E-19	0.000E+00	0.000E+00	0.000E+00	0.000E+00	1.890E-15	0.000E+00	1.930E-20
Y-92	5.380E-04	0.000E+00	0.000E+00	0.000E+00	0.000E+00	1.030E+01	0.000E+00	1.510E-05
Y-93	2.160E+00	0.000E+00	0.000E+00	0.000E+00	0.000E+00	1.700E+04	0.000E+00	5.870E-02
ZR-95	6.800E+03	1.660E+03	0.000E+00	1.790E+03	0.000E+00	8.260E+05	0.000E+00	1.180E+03
ZR-97	4.060E+00	6.970E-01	0.000E+00	7.030E-01	0.000E+00	4.450E+04	0.000E+00	3.180E-01
NB-95	5.930E+05	2.440E+05	0.000E+00	1.750E+05	0.000E+00	2.060E+08	0.000E+00	1.410E+05
MO-99	0.000E+00	2.080E+08	0.000E+00	3.110E+08	0.000E+00	6.850E+07	0.000E+00	4.060E+07
TC-99M	2.750E+01	5.670E+01	0.000E+00	6.100E+02	2.960E+01	1.650E+04	0.000E+00	7.300E+02
TC-101	2.470E-59	3.110E-59	0.000E+00	3.700E-58	1.700E-59	5.280E-57	0.000E+00	3.080E-58
RU-103	8.670E+03	0.000E+00	0.000E+00	1.800E+04	0.000E+00	1.050E+05	0.000E+00	2.900E+03
RU-105	8.050E-03	0.000E+00	0.000E+00	5.920E-02	0.000E+00	3.200E+00	0.000E+00	2.710E-03
RU-106	1.900E+05	0.000E+00	0.000E+00	2.250E+05	0.000E+00	1.440E+06	0.000E+00	2.380E+04
AG-110M	3.860E+08	2.820E+08	0.000E+00	4.030E+08	0.000E+00	1.460E+10	0.000E+00	1.860E+08
TE-125M	1.510E+08	5.040E+07	5.070E+07	0.000E+00	0.000E+00	7.180E+07	0.000E+00	2.040E+07
TE-127	6.320E+03	2.120E+03	5.140E+03	1.540E+04	0.000E+00	1.330E+05	0.000E+00	1.360E+03
TE-127M	4.210E+08	1.400E+08	1.220E+08	1.040E+09	0.000E+00	1.700E+08	0.000E+00	5.100E+07
TE-129	2.720E-09	9.380E-10	2.280E-09	6.770E-09	0.000E+00	2.170E-07	0.000E+00	6.350E-10
TE-129M	5.570E+08	1.910E+08	2.140E+08	1.390E+09	0.000E+00	3.330E+08	0.000E+00	8.580E+07
TE-131	3.430E-32	1.270E-32	3.060E-32	8.760E-32	0.000E+00	1.380E-30	0.000E+00	9.610E-33
TE-131M	3.380E+06	1.360E+06	2.750E+06	9.350E+06	0.000E+00	2.290E+07	0.000E+00	1.120E+06
TE-132	2.110E+07	1.040E+07	1.540E+07	6.530E+07	0.000E+00	3.870E+07	0.000E+00	9.750E+06
I-130	3.550E+06	7.810E+06	8.750E+08	8.580E+06	0.000E+00	1.670E+06	0.000E+00	3.130E+06

APPENDIX J

R_i Infant Dose Factors for use in the Gaseous Dose Calculations

Agegroup:	INFANT	Pathway:	Grs/Cow/Milk (CMILK)			Units:	m^2·mrem/yr / mCi/sec; mrem/yr / mCi/m^3 (H-3)	
Nuclide	**Bone**	**Liver**	**Thyroid**	**Kidney**	**Lung**	**Gilli**	**Skin**	**Total Body**
I-131	2.720E+09	3.200E+09	1.050E+12	3.740E+09	0.000E+00	1.140E+08	0.000E+00	1.410E+09
I-132	1.430E+00	2.900E+00	1.360E+02	3.240E+00	0.000E+00	2.350E+00	0.000E+00	1.030E+00
I-133	3.630E+07	5.280E+07	9.600E+09	6.210E+07	0.000E+00	8.930E+06	0.000E+00	1.550E+07
I-134	1.760E-11	3.600E-11	8.400E-10	4.030E-11	0.000E+00	3.720E-11	0.000E+00	1.280E-11
I-135	1.120E+05	2.230E+05	2.000E+07	2.490E+05	0.000E+00	8.080E+04	0.000E+00	8.140E+04
CS-134	3.650E+10	6.800E+10	0.000E+00	1.750E+10	7.180E+09	1.850E+08	0.000E+00	6.870E+09
CS-136	1.980E+09	5.810E+09	0.000E+00	2.320E+09	4.740E+08	8.820E+07	0.000E+00	2.170E+09
CS-137	5.150E+10	6.020E+10	0.000E+00	1.620E+10	6.550E+09	1.880E+08	0.000E+00	4.270E+09
CS-138	8.390E-23	1.360E-22	0.000E+00	6.800E-23	1.060E-23	2.180E-22	0.000E+00	6.610E-23
BA-139	4.270E-07	2.830E-10	0.000E+00	1.700E-10	1.720E-10	2.710E-05	0.000E+00	1.240E-08
BA-140	2.410E+08	2.410E+05	0.000E+00	5.720E+04	1.480E+05	5.920E+07	0.000E+00	1.240E+07
BA-141	3.930E-45	2.690E-48	0.000E+00	1.620E-48	1.640E-48	4.800E-44	0.000E+00	1.240E-46
BA-142	2.430E-79	2.020E-82	0.000E+00	1.160E-82	1.220E-82	1.000E-78	0.000E+00	1.200E-80
LA-140	4.050E+01	1.600E+01	0.000E+00	0.000E+00	0.000E+00	1.880E+05	0.000E+00	4.110E+00
LA-142	1.700E-10	6.250E-11	0.000E+00	0.000E+00	0.000E+00	1.060E-05	0.000E+00	1.500E-11
CE-141	4.340E+04	2.640E+04	0.000E+00	8.150E+03	0.000E+00	1.370E+07	0.000E+00	3.110E+03
CE-143	3.970E+02	2.630E+05	0.000E+00	7.670E+01	0.000E+00	1.540E+06	0.000E+00	3.000E+01
CE-144	2.330E+06	9.520E+05	0.000E+00	3.850E+05	0.000E+00	1.330E+08	0.000E+00	1.300E+05
PR-143	1.490E+03	5.550E+02	0.000E+00	2.060E+02	0.000E+00	7.840E+05	0.000E+00	7.360E+01
PR-144	5.690E-53	2.200E-53	0.000E+00	7.980E-54	0.000E+00	1.020E-48	0.000E+00	2.870E-54
ND-147	8.810E+02	9.050E+02	0.000E+00	3.490E+02	0.000E+00	5.740E+05	0.000E+00	5.550E+01
W-187	6.080E+04	4.230E+04	0.000E+00	0.000E+00	0.000E+00	2.480E+06	0.000E+00	1.460E+04
NP-239	3.650E+01	3.260E+00	0.000E+00	6.510E+00	0.000E+00	9.430E+04	0.000E+00	1.840E+00

APPENDIX J

R_i Infant Dose Factors for use in the Gaseous Dose Calculations

Agegroup:	INFANT	Pathway:	Grs/Goat/Milk (GMILK)			Units:	m^2·mrem/yr / mCi/sec; mrem/yr / mCi/m^3 (H-3)	
Nuclide	**Bone**	**Liver**	**Thyroid**	**Kidney**	**Lung**	**Gilli**	**Skin**	**Total Body**
H-3	0.000E+00	4.860E+03	4.860E+03	4.860E+03	4.860E+03	4.860E+03	0.000E+00	4.860E+03
C-14	2.340E+09	5.000E+08	5.000E+08	5.000E+08	5.000E+08	5.000E+08	0.000E+00	5.000E+08
NA-24	1.850E+06	1.850E+06	1.850E+06	1.850E+06	1.850E+06	1.850E+06	0.000E+00	1.850E+06
P-32	1.920E+11	1.130E+10	0.000E+00	0.000E+00	0.000E+00	2.600E+09	0.000E+00	7.460E+09
CR-51	0.000E+00	0.000E+00	1.260E+04	2.760E+03	2.460E+04	5.640E+05	0.000E+00	1.940E+04
MN-54	0.000E+00	4.680E+06	0.000E+00	1.040E+06	0.000E+00	1.720E+06	0.000E+00	1.060E+06
MN-56	0.000E+00	3.720E-03	0.000E+00	3.190E-03	0.000E+00	3.380E-01	0.000E+00	6.410E-04
FE-55	1.760E+06	1.130E+06	0.000E+00	0.000E+00	5.550E+05	1.440E+05	0.000E+00	3.030E+05
FE-59	2.920E+06	5.100E+06	0.000E+00	0.000E+00	1.510E+06	2.430E+06	0.000E+00	2.010E+06
CO-58	0.000E+00	2.910E+06	0.000E+00	0.000E+00	0.000E+00	7.250E+06	0.000E+00	7.260E+06
CO-60	0.000E+00	1.060E+07	0.000E+00	0.000E+00	0.000E+00	2.520E+07	0.000E+00	2.500E+07
NI-63	4.190E+09	2.590E+08	0.000E+00	0.000E+00	0.000E+00	1.290E+07	0.000E+00	1.450E+08
NI-65	4.210E-01	4.760E-02	0.000E+00	0.000E+00	0.000E+00	3.620E+00	0.000E+00	2.170E-02
CU-64	0.000E+00	2.070E+04	0.000E+00	3.500E+04	0.000E+00	4.240E+05	0.000E+00	9.570E+03
ZN-65	6.660E+08	2.280E+09	0.000E+00	1.110E+09	0.000E+00	1.930E+09	0.000E+00	1.050E+09
ZN-69	2.420E-12	4.360E-12	0.000E+00	1.810E-12	0.000E+00	3.550E-10	0.000E+00	3.240E-13
BR-83	0.000E+00	0.000E+00	0.000E+00	0.000E+00	0.000E+00	0.000E+00	0.000E+00	1.120E-01
BR-84	0.000E+00	0.000E+00	0.000E+00	0.000E+00	0.000E+00	0.000E+00	0.000E+00	1.510E-23
BR-85	0.000E+00	0.000E+00	0.000E+00	0.000E+00	0.000E+00	0.000E+00	0.000E+00	0.000E+00
RB-86	0.000E+00	2.670E+09	0.000E+00	0.000E+00	0.000E+00	6.830E+07	0.000E+00	1.320E+09
RB-88	0.000E+00	2.250E-45	0.000E+00	0.000E+00	0.000E+00	2.190E-45	0.000E+00	1.230E-45
RB-89	0.000E+00	3.940E-53	0.000E+00	0.000E+00	0.000E+00	1.340E-53	0.000E+00	2.720E-53
SR-89	2.640E+10	0.000E+00	0.000E+00	0.000E+00	0.000E+00	5.430E+08	0.000E+00	7.580E+08
SR-90	2.550E+11	0.000E+00	0.000E+00	0.000E+00	0.000E+00	3.190E+09	0.000E+00	6.500E+10
SR-91	5.700E+05	0.000E+00	0.000E+00	0.000E+00	0.000E+00	6.750E+05	0.000E+00	2.060E+04

APPENDIX J

R_i Infant Dose Factors for use in the Gaseous Dose Calculations

Agegroup:	INFANT	Pathway:	Grs/Goat/Milk (GMILK)			Units:	m^2·mrem/yr / mCi/sec; mrem/yr / mCi/m^3 (H-3)	
Nuclide	**Bone**	**Liver**	**Thyroid**	**Kidney**	**Lung**	**Gilli**	**Skin**	**Total Body**
SR-92	9.750E+00	0.000E+00	0.000E+00	0.000E+00	0.000E+00	1.050E+02	0.000E+00	3.620E-01
Y-90	8.170E+01	0.000E+00	0.000E+00	0.000E+00	0.000E+00	1.130E+05	0.000E+00	2.190E+00
Y-91	8.790E+03	0.000E+00	0.000E+00	0.000E+00	0.000E+00	6.300E+05	0.000E+00	2.340E+02
Y-91M	6.810E-20	0.000E+00	0.000E+00	0.000E+00	0.000E+00	2.270E-16	0.000E+00	2.320E-21
Y-92	6.450E-05	0.000E+00	0.000E+00	0.000E+00	0.000E+00	1.230E+00	0.000E+00	1.810E-06
Y-93	2.590E-01	0.000E+00	0.000E+00	0.000E+00	0.000E+00	2.040E+03	0.000E+00	7.050E-03
ZR-95	8.170E+02	1.990E+02	0.000E+00	2.140E+02	0.000E+00	9.910E+04	0.000E+00	1.410E+02
ZR-97	4.870E-01	8.360E-02	0.000E+00	8.430E-02	0.000E+00	5.340E+03	0.000E+00	3.820E-02
NB-95	7.120E+04	2.930E+04	0.000E+00	2.100E+04	0.000E+00	2.480E+07	0.000E+00	1.700E+04
MO-99	0.000E+00	2.500E+07	0.000E+00	3.730E+07	0.000E+00	8.220E+06	0.000E+00	4.870E+06
TC-99M	3.300E+00	6.800E+00	0.000E+00	7.320E+01	3.550E+00	1.970E+03	0.000E+00	8.760E+01
TC-101	2.960E-60	3.730E-60	0.000E+00	4.440E-59	2.030E-60	6.340E-58	0.000E+00	3.690E-59
RU-103	1.040E+03	0.000E+00	0.000E+00	2.170E+03	0.000E+00	1.270E+04	0.000E+00	3.480E+02
RU-105	9.660E-04	0.000E+00	0.000E+00	7.110E-03	0.000E+00	3.840E-01	0.000E+00	3.250E-04
RU-106	2.280E+04	0.000E+00	0.000E+00	2.700E+04	0.000E+00	1.730E+05	0.000E+00	2.850E+03
AG-110M	4.630E+07	3.380E+07	0.000E+00	4.830E+07	0.000E+00	1.750E+09	0.000E+00	2.240E+07
TE-125M	1.810E+07	6.050E+06	6.090E+06	0.000E+00	0.000E+00	8.620E+06	0.000E+00	2.450E+06
TE-127	7.580E+02	2.540E+02	6.170E+02	1.850E+03	0.000E+00	1.590E+04	0.000E+00	1.630E+02
TE-127M	5.050E+07	1.680E+07	1.460E+07	1.240E+08	0.000E+00	2.040E+07	0.000E+00	6.120E+06
TE-129	3.260E-10	1.130E-10	2.740E-10	8.130E-10	0.000E+00	2.610E-08	0.000E+00	7.620E-11
TE-129M	6.690E+07	2.290E+07	2.570E+07	1.670E+08	0.000E+00	3.990E+07	0.000E+00	1.030E+07
TE-131	4.110E-33	1.520E-33	3.670E-33	1.050E-32	0.000E+00	1.660E-31	0.000E+00	1.150E-33
TE-131M	4.050E+05	1.630E+05	3.310E+05	1.120E+06	0.000E+00	2.750E+06	0.000E+00	1.350E+05
TE-132	2.530E+06	1.250E+06	1.850E+06	7.840E+06	0.000E+00	4.640E+06	0.000E+00	1.170E+06
I-130	4.260E+06	9.370E+06	1.050E+09	1.030E+07	0.000E+00	2.010E+06	0.000E+00	3.760E+06

APPENDIX J

R_i Infant Dose Factors for use in the Gaseous Dose Calculations

Agegroup:	INFANT	Pathway:	Grs/Goat/Milk (GMILK)			Units:	m^2·mrem/yr / mCi/sec; mrem/yr / mCi/m^3 (H-3)	
Nuclide	**Bone**	**Liver**	**Thyroid**	**Kidney**	**Lung**	**Gilli**	**Skin**	**Total Body**
I-131	3.260E+09	3.850E+09	1.260E+12	4.490E+09	0.000E+00	1.370E+08	0.000E+00	1.690E+09
I-132	1.720E+00	3.480E+00	1.630E+02	3.890E+00	0.000E+00	2.820E+00	0.000E+00	1.240E+00
I-133	4.350E+07	6.340E+07	1.150E+10	7.450E+07	0.000E+00	1.070E+07	0.000E+00	1.860E+07
I-134	2.110E-11	4.320E-11	1.010E-09	4.830E-11	0.000E+00	4.470E-11	0.000E+00	1.540E-11
I-135	1.350E+05	2.680E+05	2.400E+07	2.990E+05	0.000E+00	9.700E+04	0.000E+00	9.770E+04
CS-134	1.090E+11	2.040E+11	0.000E+00	5.250E+10	2.150E+10	5.540E+08	0.000E+00	2.060E+10
CS-136	5.930E+09	1.740E+10	0.000E+00	6.950E+09	1.420E+09	2.650E+08	0.000E+00	6.510E+09
CS-137	1.540E+11	1.810E+11	0.000E+00	4.850E+10	1.960E+10	5.650E+08	0.000E+00	1.280E+10
CS-138	2.520E-22	4.090E-22	0.000E+00	2.040E-22	3.190E-23	6.540E-22	0.000E+00	1.980E-22
BA-139	5.130E-08	3.400E-11	0.000E+00	2.040E-11	2.060E-11	3.250E-06	0.000E+00	1.480E-09
BA-140	2.890E+07	2.890E+04	0.000E+00	6.870E+03	1.780E+04	7.100E+06	0.000E+00	1.490E+06
BA-141	4.720E-46	3.230E-49	0.000E+00	1.940E-49	1.960E-49	5.760E-45	0.000E+00	1.490E-47
BA-142	2.920E-80	2.430E-83	0.000E+00	1.400E-83	1.470E-83	1.200E-79	0.000E+00	1.440E-81
LA-140	4.860E+00	1.920E+00	0.000E+00	0.000E+00	0.000E+00	2.250E+04	0.000E+00	4.930E-01
LA-142	2.040E-11	7.500E-12	0.000E+00	0.000E+00	0.000E+00	1.270E-06	0.000E+00	1.790E-12
CE-141	5.200E+03	3.170E+03	0.000E+00	9.790E+02	0.000E+00	1.640E+06	0.000E+00	3.740E+02
CE-143	4.760E+01	3.160E+04	0.000E+00	9.200E+00	0.000E+00	1.840E+05	0.000E+00	3.600E+00
CE-144	2.790E+05	1.140E+05	0.000E+00	4.620E+04	0.000E+00	1.600E+07	0.000E+00	1.560E+04
PR-143	1.780E+02	6.670E+01	0.000E+00	2.480E+01	0.000E+00	9.410E+04	0.000E+00	8.840E+00
PR-144	6.830E-54	2.640E-54	0.000E+00	9.570E-55	0.000E+00	1.230E-49	0.000E+00	3.440E-55
ND-147	1.060E+02	1.090E+02	0.000E+00	4.190E+01	0.000E+00	6.880E+04	0.000E+00	6.650E+00
W-187	7.300E+03	5.070E+03	0.000E+00	0.000E+00	0.000E+00	2.980E+05	0.000E+00	1.750E+03
NP-239	4.380E+00	3.910E-01	0.000E+00	7.810E-01	0.000E+00	1.130E+04	0.000E+00	2.210E-01

APPENDIX J

R_i Infant Dose Factors for use in the Gaseous Dose Calculations

Agegroup:	INFANT	Pathway:	Inhalation (INHL)			Units:	mrem/yr / mCi/m^3	
Nuclide	**Bone**	**Liver**	**Thyroid**	**Kidney**	**Lung**	**Gilli**	**Skin**	**Total Body**
H-3	0.000E+00	6.470E+02	6.470E+02	6.470E+02	6.470E+02	6.470E+02	0.000E+00	6.470E+02
C-14	2.650E+04	5.310E+03	5.310E+03	5.310E+03	5.310E+03	5.310E+03	0.000E+00	5.310E+03
NA-24	1.060E+04	1.060E+04	1.060E+04	1.060E+04	1.060E+04	1.060E+04	0.000E+00	1.060E+04
P-32	2.030E+06	1.120E+05	0.000E+00	0.000E+00	0.000E+00	1.610E+04	0.000E+00	7.740E+04
CR-51	0.000E+00	0.000E+00	5.750E+01	1.320E+01	1.280E+04	3.570E+02	0.000E+00	8.950E+01
MN-54	0.000E+00	2.530E+04	0.000E+00	4.980E+03	1.000E+06	7.060E+03	0.000E+00	4.980E+03
MN-56	0.000E+00	1.540E+00	0.000E+00	1.100E+00	1.250E+04	7.170E+04	0.000E+00	2.210E-01
FE-55	1.970E+04	1.170E+04	0.000E+00	0.000E+00	8.690E+04	1.090E+03	0.000E+00	3.330E+03
FE-59	1.360E+04	2.350E+04	0.000E+00	0.000E+00	1.010E+06	2.480E+04	0.000E+00	9.480E+03
CO-58	0.000E+00	1.220E+03	0.000E+00	0.000E+00	7.770E+05	1.110E+04	0.000E+00	1.820E+03
CO-60	0.000E+00	8.020E+03	0.000E+00	0.000E+00	4.510E+06	3.190E+04	0.000E+00	1.180E+04
NI-63	3.390E+05	2.040E+04	0.000E+00	0.000E+00	2.090E+05	2.420E+03	0.000E+00	1.160E+04
NI-65	2.390E+00	2.840E-01	0.000E+00	0.000E+00	8.120E+03	5.010E+04	0.000E+00	1.230E-01
CU-64	0.000E+00	1.880E+00	0.000E+00	3.980E+00	9.300E+03	1.500E+04	0.000E+00	7.740E-01
ZN-65	1.930E+04	6.260E+04	0.000E+00	3.250E+04	6.470E+05	5.140E+04	0.000E+00	3.110E+04
ZN-69	5.390E-02	9.670E-02	0.000E+00	4.020E-02	1.470E+03	1.320E+04	0.000E+00	7.180E-03
BR-83	0.000E+00	0.000E+00	0.000E+00	0.000E+00	0.000E+00	0.000E+00	0.000E+00	3.810E+02
BR-84	0.000E+00	0.000E+00	0.000E+00	0.000E+00	0.000E+00	0.000E+00	0.000E+00	4.000E+02
BR-85	0.000E+00	0.000E+00	0.000E+00	0.000E+00	0.000E+00	0.000E+00	0.000E+00	2.040E+01
RB-86	0.000E+00	1.900E+05	0.000E+00	0.000E+00	0.000E+00	3.040E+03	0.000E+00	8.820E+04
RB-88	0.000E+00	5.570E+02	0.000E+00	0.000E+00	0.000E+00	3.390E+02	0.000E+00	2.870E+02
RB-89	0.000E+00	3.210E+02	0.000E+00	0.000E+00	0.000E+00	6.820E+01	0.000E+00	2.060E+02
SR-89	3.980E+05	0.000E+00	0.000E+00	0.000E+00	2.030E+06	6.400E+04	0.000E+00	1.140E+04
SR-90	4.090E+07	0.000E+00	0.000E+00	0.000E+00	1.120E+07	1.310E+05	0.000E+00	2.590E+06
SR-91	9.560E+01	0.000E+00	0.000E+00	0.000E+00	5.260E+04	7.340E+04	0.000E+00	3.460E+00

APPENDIX J

R_i Infant Dose Factors for use in the Gaseous Dose Calculations

Agegroup:	INFANT	Pathway:	Inhalation (INHL)			Units:	mrem/yr / mCi/m^3	
Nuclide	**Bone**	**Liver**	**Thyroid**	**Kidney**	**Lung**	**Gilli**	**Skin**	**Total Body**
SR-92	1.050E+01	0.000E+00	0.000E+00	0.000E+00	2.380E+04	1.400E+05	0.000E+00	3.910E-01
Y-90	3.290E+03	0.000E+00	0.000E+00	0.000E+00	2.690E+05	1.040E+05	0.000E+00	8.820E+01
Y-91	5.880E+05	0.000E+00	0.000E+00	0.000E+00	2.450E+06	7.030E+04	0.000E+00	1.570E+04
Y-91M	4.070E-01	0.000E+00	0.000E+00	0.000E+00	2.790E+03	2.350E+03	0.000E+00	1.390E-02
Y-92	1.640E+01	0.000E+00	0.000E+00	0.000E+00	2.450E+04	1.270E+05	0.000E+00	4.610E-01
Y-93	1.500E+02	0.000E+00	0.000E+00	0.000E+00	7.640E+04	1.670E+05	0.000E+00	4.070E+00
ZR-95	1.150E+05	2.790E+04	0.000E+00	3.110E+04	1.750E+06	2.170E+04	0.000E+00	2.030E+04
ZR-97	1.500E+02	2.560E+01	0.000E+00	2.590E+01	1.100E+05	1.400E+05	0.000E+00	1.170E+01
NB-95	1.570E+04	6.430E+03	0.000E+00	4.720E+03	4.790E+05	1.270E+04	0.000E+00	3.780E+03
MO-99	0.000E+00	1.650E+02	0.000E+00	2.650E+02	1.350E+05	4.870E+04	0.000E+00	3.230E+01
TC-99M	1.400E-03	2.880E-03	0.000E+00	3.110E-02	8.110E+02	2.030E+03	0.000E+00	3.720E-02
TC-101	6.510E-05	8.230E-05	0.000E+00	9.790E-04	5.840E+02	8.440E+02	0.000E+00	8.120E-04
RU-103	2.020E+03	0.000E+00	0.000E+00	4.240E+03	5.520E+05	1.610E+04	0.000E+00	6.790E+02
RU-105	1.220E+00	0.000E+00	0.000E+00	8.990E-01	1.570E+04	4.840E+04	0.000E+00	4.100E-01
RU-106	8.680E+04	0.000E+00	0.000E+00	1.070E+05	1.160E+07	1.640E+05	0.000E+00	1.090E+04
AG-110M	9.980E+03	7.220E+03	0.000E+00	1.090E+04	3.670E+06	3.300E+04	0.000E+00	5.000E+03
TE-125M	4.760E+03	1.990E+03	1.620E+03	0.000E+00	4.470E+05	1.290E+04	0.000E+00	6.580E+02
TE-127	2.230E+00	9.530E-01	1.850E+00	4.860E+00	1.030E+04	2.440E+04	0.000E+00	4.890E-01
TE-127M	1.670E+04	6.900E+03	4.870E+03	3.750E+04	1.310E+06	2.730E+04	0.000E+00	2.070E+03
TE-129	7.880E-02	3.470E-02	6.750E-02	1.750E-01	3.000E+03	2.630E+04	0.000E+00	1.880E-02
TE-129M	1.410E+04	6.090E+03	5.470E+03	3.180E+04	1.680E+06	6.900E+04	0.000E+00	2.230E+03
TE-131	1.740E-02	8.220E-03	1.580E-02	3.990E-02	2.060E+03	8.220E+03	0.000E+00	5.000E-03
TE-131M	1.070E+02	5.500E+01	8.930E+01	2.650E+02	1.990E+05	1.190E+05	0.000E+00	3.630E+01
TE-132	3.720E+02	2.370E+02	2.790E+02	1.030E+03	3.400E+05	4.410E+04	0.000E+00	1.760E+02
I-130	6.360E+03	1.390E+04	1.600E+06	1.530E+04	0.000E+00	1.990E+03	0.000E+00	5.570E+03

APPENDIX J

R_i Infant Dose Factors for use in the Gaseous Dose Calculations

Agegroup:	INFANT	Pathway:	Inhalation (INHL)			Units:	mrem/yr / mCi/m^3	
Nuclide	**Bone**	**Liver**	**Thyroid**	**Kidney**	**Lung**	**Gilli**	**Skin**	**Total Body**
I-131	3.790E+04	4.440E+04	1.480E+07	5.180E+04	0.000E+00	1.060E+03	0.000E+00	1.960E+04
I-132	1.690E+03	3.540E+03	1.690E+05	3.950E+03	0.000E+00	1.900E+03	0.000E+00	1.260E+03
I-133	1.320E+04	1.920E+04	3.560E+06	2.240E+04	0.000E+00	2.160E+03	0.000E+00	5.600E+03
I-134	9.210E+02	1.880E+03	4.450E+04	2.090E+03	0.000E+00	1.290E+03	0.000E+00	6.650E+02
I-135	3.860E+03	7.600E+03	6.960E+05	8.470E+03	0.000E+00	1.830E+03	0.000E+00	2.770E+03
CS-134	3.960E+05	7.030E+05	0.000E+00	1.900E+05	7.970E+04	1.330E+03	0.000E+00	7.450E+04
CS-136	4.830E+04	1.350E+05	0.000E+00	5.640E+04	1.180E+04	1.430E+03	0.000E+00	5.290E+04
CS-137	5.490E+05	6.120E+05	0.000E+00	1.720E+05	7.130E+04	1.330E+03	0.000E+00	4.550E+04
CS-138	5.050E+02	7.810E+02	0.000E+00	4.100E+02	6.540E+01	8.760E+02	0.000E+00	3.980E+02
BA-139	1.480E+00	9.840E-04	0.000E+00	5.920E-04	5.950E+03	5.100E+04	0.000E+00	4.300E-02
BA-140	5.600E+04	5.600E+01	0.000E+00	1.340E+01	1.600E+06	3.840E+04	0.000E+00	2.900E+03
BA-141	1.570E-01	1.080E-04	0.000E+00	6.500E-05	2.970E+03	4.750E+03	0.000E+00	4.970E-03
BA-142	3.980E-02	3.300E-05	0.000E+00	1.900E-05	1.550E+03	6.930E+02	0.000E+00	1.960E-03
LA-140	5.050E+02	2.000E+02	0.000E+00	0.000E+00	1.680E+05	8.480E+04	0.000E+00	5.150E+01
LA-142	1.030E+00	3.770E-01	0.000E+00	0.000E+00	8.220E+03	5.950E+04	0.000E+00	9.040E-02
CE-141	2.770E+04	1.670E+04	0.000E+00	5.250E+03	5.170E+05	2.160E+04	0.000E+00	1.990E+03
CE-143	2.930E+02	1.930E+02	0.000E+00	5.640E+01	1.160E+05	4.970E+04	0.000E+00	2.210E+01
CE-144	3.190E+06	1.210E+06	0.000E+00	5.380E+05	9.840E+06	1.480E+05	0.000E+00	1.760E+05
PR-143	1.400E+04	5.240E+03	0.000E+00	1.970E+03	4.330E+05	3.720E+04	0.000E+00	6.990E+02
PR-144	4.790E-02	1.850E-02	0.000E+00	6.720E-03	1.610E+03	4.280E+03	0.000E+00	2.410E-03
ND-147	7.940E+03	8.130E+03	0.000E+00	3.150E+03	3.220E+05	3.120E+04	0.000E+00	5.000E+02
W-187	1.300E+01	9.020E+00	0.000E+00	0.000E+00	3.960E+04	3.560E+04	0.000E+00	3.120E+00
NP-239	3.710E+02	3.320E+01	0.000E+00	6.620E+01	5.950E+04	2.490E+04	0.000E+00	1.880E+01

APPENDIX J

R_i Infant Dose Factors for use in the Gaseous Dose Calculations

Agegroup:	INFANT	Pathway:	Ground Plane Deposition (GPD)			Units:	m^2·mrem/yr / mCi/sec	
Nuclide	**Bone**	**Liver**	**Thyroid**	**Kidney**	**Lung**	**Gilli**	**Skin**	**Total Body**
H-3	0.000E+00	0.000E+00	0.000E+00	0.000E+00	0.000E+00	0.000E+00	0.000E+00	0.000E+00
C-14	0.000E+00	0.000E+00	0.000E+00	0.000E+00	0.000E+00	0.000E+00	0.000E+00	0.000E+00
NA-24	1.190E+07	1.190E+07	1.190E+07	1.190E+07	1.190E+07	1.190E+07	1.390E+07	1.190E+07
P-32	0.000E+00	0.000E+00	0.000E+00	0.000E+00	0.000E+00	0.000E+00	0.000E+00	0.000E+00
CR-51	4.660E+06	4.660E+06	4.660E+06	4.660E+06	4.660E+06	4.660E+06	5.510E+06	4.660E+06
MN-54	1.390E+09	1.390E+09	1.390E+09	1.390E+09	1.390E+09	1.390E+09	1.630E+09	1.390E+09
MN-56	9.020E+05	9.020E+05	9.020E+05	9.020E+05	9.020E+05	9.020E+05	1.070E+06	9.020E+05
FE-55	0.000E+00	0.000E+00	0.000E+00	0.000E+00	0.000E+00	0.000E+00	0.000E+00	0.000E+00
FE-59	2.730E+08	2.730E+08	2.730E+08	2.730E+08	2.730E+08	2.730E+08	3.210E+08	2.730E+08
CO-58	3.790E+08	3.790E+08	3.790E+08	3.790E+08	3.790E+08	3.790E+08	4.440E+08	3.790E+08
CO-60	2.150E+10	2.150E+10	2.150E+10	2.150E+10	2.150E+10	2.150E+10	2.530E+10	2.150E+10
NI-63	0.000E+00	0.000E+00	0.000E+00	0.000E+00	0.000E+00	0.000E+00	0.000E+00	0.000E+00
NI-65	2.970E+05	2.970E+05	2.970E+05	2.970E+05	2.970E+05	2.970E+05	3.450E+05	2.970E+05
CU-64	6.070E+05	6.070E+05	6.070E+05	6.070E+05	6.070E+05	6.070E+05	6.880E+05	6.070E+05
ZN-65	7.470E+08	7.470E+08	7.470E+08	7.470E+08	7.470E+08	7.470E+08	8.590E+08	7.470E+08
ZN-69	0.000E+00	0.000E+00	0.000E+00	0.000E+00	0.000E+00	0.000E+00	0.000E+00	0.000E+00
BR-83	4.870E+03	4.870E+03	4.870E+03	4.870E+03	4.870E+03	4.870E+03	7.080E+03	4.870E+03
BR-84	2.030E+05	2.030E+05	2.030E+05	2.030E+05	2.030E+05	2.030E+05	2.360E+05	2.030E+05
BR-85	0.000E+00	0.000E+00	0.000E+00	0.000E+00	0.000E+00	0.000E+00	0.000E+00	0.000E+00
RB-86	8.990E+06	8.990E+06	8.990E+06	8.990E+06	8.990E+06	8.990E+06	1.030E+07	8.990E+06
RB-88	3.310E+04	3.310E+04	3.310E+04	3.310E+04	3.310E+04	3.310E+04	3.780E+04	3.310E+04
RB-89	1.230E+05	1.230E+05	1.230E+05	1.230E+05	1.230E+05	1.230E+05	1.480E+05	1.230E+05
SR-89	2.160E+04	2.160E+04	2.160E+04	2.160E+04	2.160E+04	2.160E+04	2.510E+04	2.160E+04
SR-90	0.000E+00	0.000E+00	0.000E+00	0.000E+00	0.000E+00	0.000E+00	0.000E+00	0.000E+00
SR-91	2.150E+06	2.150E+06	2.150E+06	2.150E+06	2.150E+06	2.150E+06	2.510E+06	2.150E+06

APPENDIX J

R_i Infant Dose Factors for use in the Gaseous Dose Calculations

Agegroup:	INFANT	Pathway:	Ground Plane Deposition (GPD)			Units:	m^2·mrem/yr / mCi/sec	
Nuclide	**Bone**	**Liver**	**Thyroid**	**Kidney**	**Lung**	**Gilli**	**Skin**	**Total Body**
SR-92	7.770E+05	7.770E+05	7.770E+05	7.770E+05	7.770E+05	7.770E+05	8.630E+05	7.770E+05
Y-90	4.490E+03	4.490E+03	4.490E+03	4.490E+03	4.490E+03	4.490E+03	5.310E+03	4.490E+03
Y-91	1.070E+06	1.070E+06	1.070E+06	1.070E+06	1.070E+06	1.070E+06	1.210E+06	1.070E+06
Y-91M	1.000E+05	1.000E+05	1.000E+05	1.000E+05	1.000E+05	1.000E+05	1.160E+05	1.000E+05
Y-92	1.800E+05	1.800E+05	1.800E+05	1.800E+05	1.800E+05	1.800E+05	2.140E+05	1.800E+05
Y-93	1.830E+05	1.830E+05	1.830E+05	1.830E+05	1.830E+05	1.830E+05	2.510E+05	1.830E+05
ZR-95	2.450E+08	2.450E+08	2.450E+08	2.450E+08	2.450E+08	2.450E+08	2.840E+08	2.450E+08
ZR-97	2.960E+06	2.960E+06	2.960E+06	2.960E+06	2.960E+06	2.960E+06	3.440E+06	2.960E+06
NB-95	1.370E+08	1.370E+08	1.370E+08	1.370E+08	1.370E+08	1.370E+08	1.610E+08	1.370E+08
MO-99	3.990E+06	3.990E+06	3.990E+06	3.990E+06	3.990E+06	3.990E+06	4.630E+06	3.990E+06
TC-99M	1.840E+05	1.840E+05	1.840E+05	1.840E+05	1.840E+05	1.840E+05	2.110E+05	1.840E+05
TC-101	2.040E+04	2.040E+04	2.040E+04	2.040E+04	2.040E+04	2.040E+04	2.260E+04	2.040E+04
RU-103	1.080E+08	1.080E+08	1.080E+08	1.080E+08	1.080E+08	1.080E+08	1.260E+08	1.080E+08
RU-105	6.360E+05	6.360E+05	6.360E+05	6.360E+05	6.360E+05	6.360E+05	7.210E+05	6.360E+05
RU-106	4.220E+08	4.220E+08	4.220E+08	4.220E+08	4.220E+08	4.220E+08	5.070E+08	4.220E+08
AG-110M	3.440E+09	3.440E+09	3.440E+09	3.440E+09	3.440E+09	3.440E+09	4.010E+09	3.440E+09
TE-125M	1.550E+06	1.550E+06	1.550E+06	1.550E+06	1.550E+06	1.550E+06	2.130E+06	1.550E+06
TE-127	2.980E+03	2.980E+03	2.980E+03	2.980E+03	2.980E+03	2.980E+03	3.280E+03	2.980E+03
TE-127M	9.160E+04	9.160E+04	9.160E+04	9.160E+04	9.160E+04	9.160E+04	1.080E+05	9.160E+04
TE-129	2.620E+04	2.620E+04	2.620E+04	2.620E+04	2.620E+04	2.620E+04	3.100E+04	2.620E+04
TE-129M	1.980E+07	1.980E+07	1.980E+07	1.980E+07	1.980E+07	1.980E+07	2.310E+07	1.980E+07
TE-131	2.920E+04	2.920E+04	2.920E+04	2.920E+04	2.920E+04	2.920E+04	3.450E+07	2.920E+04
TE-131M	8.030E+06	8.030E+06	8.030E+06	8.030E+06	8.030E+06	8.030E+06	9.460E+06	8.030E+06
TE-132	4.230E+06	4.230E+06	4.230E+06	4.230E+06	4.230E+06	4.230E+06	4.980E+06	4.230E+06
I-130	5.510E+06	5.510E+06	5.510E+06	5.510E+06	5.510E+06	5.510E+06	6.690E+06	5.510E+06

APPENDIX J

R_i Infant Dose Factors for use in the Gaseous Dose Calculations

Agegroup:	INFANT	Pathway:	Ground Plane Deposition (GPD)			Units:	m^2·mrem/yr / mCi/sec	
Nuclide	**Bone**	**Liver**	**Thyroid**	**Kidney**	**Lung**	**Gilli**	**Skin**	**Total Body**
I-131	1.720E+07	1.720E+07	1.720E+07	1.720E+07	1.720E+07	1.720E+07	2.090E+07	1.720E+07
I-132	1.250E+06	1.250E+06	1.250E+06	1.250E+06	1.250E+06	1.250E+06	1.470E+06	1.250E+06
I-133	2.450E+06	2.450E+06	2.450E+06	2.450E+06	2.450E+06	2.450E+06	2.980E+06	2.450E+06
I-134	4.470E+05	4.470E+05	4.470E+05	4.470E+05	4.470E+05	4.470E+05	5.300E+05	4.470E+05
I-135	2.530E+06	2.530E+06	2.530E+06	2.530E+06	2.530E+06	2.530E+06	2.950E+06	2.530E+06
CS-134	6.860E+09	6.860E+09	6.860E+09	6.860E+09	6.860E+09	6.860E+09	8.000E+09	6.860E+09
CS-136	1.510E+08	1.510E+08	1.510E+08	1.510E+08	1.510E+08	1.510E+08	1.710E+08	1.510E+08
CS-137	1.030E+10	1.030E+10	1.030E+10	1.030E+10	1.030E+10	1.030E+10	1.200E+10	1.030E+10
CS-138	3.590E+05	3.590E+05	3.590E+05	3.590E+05	3.590E+05	3.590E+05	4.100E+05	3.590E+05
BA-139	1.060E+05	1.060E+05	1.060E+05	1.060E+05	1.060E+05	1.060E+05	1.190E+05	1.060E+05
BA-140	2.050E+07	2.050E+07	2.050E+07	2.050E+07	2.050E+07	2.050E+07	2.350E+07	2.050E+07
BA-141	4.170E+04	4.170E+04	4.170E+04	4.170E+04	4.170E+04	4.170E+04	4.750E+04	4.170E+04
BA-142	4.490E+04	4.490E+04	4.490E+04	4.490E+04	4.490E+04	4.490E+04	5.110E+04	4.490E+04
LA-140	1.920E+07	1.920E+07	1.920E+07	1.920E+07	1.920E+07	1.920E+07	2.180E+07	1.920E+07
LA-142	7.600E+05	7.600E+05	7.600E+05	7.600E+05	7.600E+05	7.600E+05	9.120E+05	7.600E+05
CE-141	1.370E+07	1.370E+07	1.370E+07	1.370E+07	1.370E+07	1.370E+07	1.540E+07	1.370E+07
CE-143	2.310E+06	2.310E+06	2.310E+06	2.310E+06	2.310E+06	2.310E+06	2.630E+06	2.310E+06
CE-144	6.950E+07	6.950E+07	6.950E+07	6.950E+07	6.950E+07	6.950E+07	8.040E+07	6.950E+07
PR-143	0.000E+00	0.000E+00	0.000E+00	0.000E+00	0.000E+00	0.000E+00	0.000E+00	0.000E+00
PR-144	1.830E+03	1.830E+03	1.830E+03	1.830E+03	1.830E+03	1.830E+03	2.110E+03	1.830E+03
ND-147	8.390E+06	8.390E+06	8.390E+06	8.390E+06	8.390E+06	8.390E+06	1.010E+07	8.390E+06
W-187	2.350E+06	2.350E+06	2.350E+06	2.350E+06	2.350E+06	2.350E+06	2.730E+06	2.350E+06
NP-239	1.710E+06	1.710E+06	1.710E+06	1.710E+06	1.710E+06	1.710E+06	1.980E+06	1.710E+06