Summary of Offsite Dose Calculation Manual (ODCM) Changes by Dresden Station in 2003

Chapter, Revision Number	Revision Date
Chapter 10, Revision 3	October 2003
Chapter 10, Revision 4	October 2003
Chapter 11, Revision 2	October 2003
Chapter 12, Revision 3	March 2003
Chapter 12, Revision 4	October 2003
Chapter 12, Revision 5	October 2003

Change Summary for Revision 3 to ODCM Chapter 12, March 2003

Page	Change Description
All pages	Updated the revision number, date and file designator.
12-ii	Updated the revision number.
12-19	In Section 12.3.A.1., corrected a typographical error by revising the wording "ten (l0) times" to read "ten (10) times".
12-24	In Table 12.3-2, updated references for Sampling Frequency and Minimum Analysis Frequency from Technical Specification 3/4.8.J to read "See Technical Requirements Manual".
12-60	In Section 12.6.2.1., revised wording to reference the requirements of Unit 1 and Units 2/3 Technical Specifications to eliminate inconsistency in the date of submittal required for the Annual Radiological Effluent Release Report.
12-61	In Section 12.6.2.2., revised wording to reference the requirements of Unit 1 and Units 2/3 Technical Specifications to eliminate inconsistency in the date of submittal required for the Annual Radiological Environmental Operating Report.
12-63	Corrected typographical error in parenthetical statement "(i.e. month and date)" to read "(i.e. month and year)".

Change Summaries for Revision 3 to ODCM Chapter 10, Revision 2 to ODCM Chapter 11, and Revision 4 to ODCM Chapter 12, October 2003

Page	Change Description
All pages	Updated the revision number, date and file designator.
10-9	Section 10.2.3.2.1 – The equation for determining the Release Tank Discharge Flow Rate was revised from: Frmax=0.1(Fd/∑(Ci/DWCi)) to Frmax=0.2(Fd/∑(Ci/DWCi)) Frmax= Max Permitted Discharge Flow Rate (gpm) Fd = Dilution Flow Rate (gpm) Ci= Concentration of Radionuclides in release tank (micro-curies/ml) DWCi = Derived Water Concentration of Radionuclide I (micro-curies/ml) The effect of this change is to revise the Safety Factor used to determine the maximum liquid radwaste discharge flow-rate.
10-9	Section 10.2.3.2.1, Added to the DWC (Derived Water Concentration) description indicating that the words Maximum Permissible Concentration are synonymous
10-10	Section 10.2.3.3, Release Limits was revised: from: Release limits are determined from 10CFR20. Calculated maximum permissible discharge rates are divided by 10 to ensure that applicable Derived Water Concentrations (DWC) is not exceeded. to: Release limits are determined from 10CFR20. Calculated maximum permissible discharge rates are divided by 5 to ensure that applicable Derived Water Concentrations (DWC) is not exceeded. This wording change also supports the safety factor reduction.
11-2	Table 11-1, deleted airborne indicator D-06.
11-6	In Table 11-1, added waterborne control location, D-54, Kankakee River.
12-25	Table 12.3-2, Radioactive Liquid Water Sampling and Analysis Program, Units 2 & 3: The sampling requirements are revised to require tritium analysis of each radwaste discharge batch prior to release. This change requires batch-specific tritium data prior to release rather than the current scaling factor method that estimates tritium. This action is put into place to require better Tritium data prior to release to compensate for reduced safety factor.

Change Summaries for Revision 4 to ODCM Chapter 10, and Revision 5 to ODCM Chapter 12, October 2003

Page	Change Description
All pages	Updated the revision number, date and file designator. Chapters 10 and 12 of the ODCM were revised during the third and fourth week of September 2003, which was noted in the heading of the chapters. PORC and the Plant Manager approved the ODCM chapter revision during the second week of October. The October date should have been captured at the time of implementation. To properly document this implementation date, a revision to chapters 10 and 12 became necessary. No other changes were made

OFFSITE DOSE CALCULATION MANUAL

TABLE OF CONTENTS

Part 1: GENERIC SECTIONS

TABLE OF CONTENTS		PAGE
Chapter 1	Introduction	1
Chapter 2	Regulations and Guidelines	2
Chapter 3	Pathways	12
Chapter 4	Introduction to Methodology	15
Chapter 5	Measurement	29
Chapter 6	Implementation of Offsite Dose Assessment Program	31
Chapter 7	References	33
Chapter 8	Intentionally Left Blank	___
Chapter 9	Intentionally Left Blank	___
Appendix A	Compliance Methodology	A-i
Appendix B	Models and Parameters for Airborne and Liquid Effluent Calculations	B-i
Appendix C	Generic Data	C-i
Appendix D	Intentionally Left Blank	___
Appendix E	Intentionally Left Blank	___

Part 2: SITE SPECIFIC SECTIONS

Chapter 10	Radiological Effluent Treatment and Monitoring
Chapter 11	Radiological Environmental Monitoring Program
Chapter 12	Radiological Effluent Technical Standards
Appendix F	Station Specific Data

Note: Previous Chapter 6 was deleted and previous Chapter 8 was renumbered as Chapter 6.
Previous Chapter 7 was deleted and replaced by the references section.
Previous Chapter 9 was deleted.
Previous Appendix B and C have been combined into Appendix B.
Previous Appendix D has been revised into Appendix C.
Previous Appendix E has been deleted and is Reference 101.

OFFSITE DOSE CALCULATION MANUAL

TABLE OF CONTENTS (Continued)

		PAGE
CHAPTER 1	**INTRODUCTION**	
1.0	INTRODUCTION	1
1.1	STRUCTURE OF THIS MANUAL	1
CHAPTER 2	**REGULATIONS AND GUIDELINES**	2
2.0	INTRODUCTION	2
2.1	CODE OF FEDERAL REGULATIONS	2
	1. 10CFR20, Standards for Protection Against Radiation	2
	2. Design Criteria (Appendix A of 10CFR50)	2
	3. ALARA Provisions (Appendix I of 10CFR50)	2
	4. 40CFR190, Environmental Radiation Protection Standards for Nuclear Power Operations	3
	5. 40CFR141, National Primary Drinking Water Regulations	3
2.2	RADIOLOGICAL EFFLUENT TECHNICAL SPECIFICATIONS/STANDARDS	3
	1. Categories	4
2.3	OFFSITE DOSE CALCULATION MANUAL	4
2.4	OVERLAPPING REQUIREMENTS	5
2.5	DOSE RECEIVER METHODOLOGY	5
CHAPTER 3	**EXPOSURE PATHWAYS**	12
3.0	INTRODUCTION	12
3.1	AIRBORNE RELEASES	12
3.2	LIQUID RELEASES	12
3.3	RADIATION FROM CONTAINED SOURCES	13

TABLE OF CONTENTS (Continued)

		PAGE
CHAPTER 4	METHODOLOGY	15
4.0	INTRODUCTION	15
4.1	IMPORTANT CONCEPTS AND PARAMETERS	15
1.	Dose and Dose Commitment	15
2.	Exposure Pathways	15
3.	Categories of Radioactivity	16
4.	Release Point Classifications	16
5.	Historical Average Atmospheric Conditions	17
6.	Relative Concentration Factor X/Q	18
7.	Relative Deposition Factor D/Q	18
8.	Dose Factors	19
4.2	AIRBORNE RELEASES	19
1.	Gamma Air Dose	19
2.	Beta Air Dose	19
3.	Whole Body Dose and Dose Rate	20
4.	Skin Dose and Dose Rate	21
5.	Ground Radiation	21
6.	Inhalation	22
7.	Ingestion	22
4.3	LIQUID RELEASES	23
4.4	CONTAINED SOURCES OF RADIOACTIVITY	24
1.	BWR Skyshine	24
2.	Onsite Radwaste Storage Facilities	24
4.5	TOTAL DOSE REQUIREMENTS	25
1.	Total Effective Dose Equivalent Limits of 10CFR20	25
2.	Total Dose for Uranium Fuel Cycle	25
CHAPTER 5	MEASUREMENT	29
5.0	INTRODUCTION	29
5.1	EFFLUENT AND PROCESS MONITORING	29
5.2	METEOROLOGICAL MONITORING	29
5.3	RADIOLOGICAL ENVIRONMENTAL MONITORING PROGRAM	29
1.	Interlaboratory Comparison Program	29

TABLE OF CONTENTS (Continued)

		PAGE
CHAPTER 6	IMPLEMENTATION OF OFFSITE DOSE ASSESSMENT	31
6.1	NUCLEAR POWER STATION	31
6.2	METEOROLOGICAL CONTRACTOR	31
6.3	REMP CONTRACTOR	31
6.4	CORPORATE DEPARTMENTS	31
CHAPTER 7	REFERENCES	33

OFFSITE DOSE CALCULATION MANUAL

LIST OF TABLES FOR THE ODCM GENERIC SECTIONS

SECTION	TABLE NUMBER	TITLE
Chapter 2	2-1	Regulatory Dose Limit Matrix
	2-2	Dose Assessment Receivers
	2-3	Dose Component/Regulation Matrix
Chapter 4	4-1	Radionuclide Types Considered For Airborne Effluent Exposure Pathways
	4-2	Radiation Dose Factors
Appendix A	A-1	Compliance Matrix
	A-2	Release Point Classifications
	A-3	Nearest Downstream Community Water Systems
	A-4	40CFR190 Compliance
Appendix C	C-1	Miscellaneous Dose Assessment Factors Environmental Parameters
	C-2	Miscellaneous Dose Assessment Factors - Consumption Rate Parameters
	C-3	Stable Element Transfer Data
	C-4	Atmospheric Stability Classes
	C-5	Vertical Dispersion Parameters
	C-6	Allowable Concentrations of Dissolved or Entrained Noble Gases Released from the Site to Unrestricted Areas in Liquid Waste
	C-7	Radiological Decay Constants (λ_i) in hr^{-1}
	C-8	Bio-accumulation Factors B_i to be Used in the Absence of Site-Specific Data
	C-9	Beta Air and Skin Dose Factors for Noble Gases
	C-10	External Dose Factors for Standing on Contaminated Ground
	C-11	Sector Code Definitions
	C-12	Exposure to Dose Conversion Factors for Inhalation
	C-13	Exposure to Dose Conversion Factors for Ingestion

LIST OF FIGURES FOR THE ODCM GENERIC SECTIONS

SECTION	FIGURE NUMBER	TITLE
Chapter 2	2-1	Simplified Flow Chart of Offsite Dose Calculations
Chapter 3	3-1	Radiation Exposure Pathways to Humans

CHAPTER 1

1.0 Introduction

The Offsite Dose Calculation Manual (ODCM) presents a discussion of the following:

- The basic concepts applied in calculating offsite doses from nuclear plant effluents.
- The regulations and requirements for the ODCM and related programs
- The methodology and parameters for the offsite dose calculations used by the nuclear power stations to assess impact on the environment and compliance with regulations.

The methodology detailed in this manual is intended for the calculation of radiation doses during routine (i.e., non-accident) conditions. The calculations are normally performed using a computer program. Manual calculations may be performed in lieu of the computer program.

The dose effects of airborne radioactivity releases predominately depend on meteorological conditions (wind speed, wind direction, and atmospheric stability). For airborne effluents, the dose calculations prescribed in this manual are based on historical average atmospheric conditions. This methodology is appropriate for estimating annual average dose effects and is stipulated in the Bases Section of the Radiological Effluent Technical Standards (RETS) of all ComEd nuclear power stations.

1.1 STRUCTURE OF THIS MANUAL

This manual is the ODCM for all ComEd nuclear power stations. It is divided into two parts. The material in the first part is generic (applicable to more than one station) and consists of Chapters 1 through 7 and Appendices A through C. The material in the second part is station (or site) specific. Therefore, there are six separate sets of station-specific sections each containing three chapters (chapters 10, 11, 12) and an appendix (App. F).

The chapters of the generic section provide a brief introduction to and overview of ComEd's offsite dose calculation methodology and parameters. The generic section appendices, Appendices A and B, provide detailed information on specific aspects of the methodology. Appendix C contains tables of values of the generic parameters used in offsite dose equations.

The station-specific section provides specific requirements for the treatment and monitoring of radioactive effluents, for the contents of the Radiological Environmental Monitoring Program (REMP) and the Radiological Effluent Technical Standards (RETS). These three programs are detailed in ODCM Chapters 10, 11 and 12 respectively. Appendix F contains tables of values for the station-specific parameters used in the offsite dose equations. References are provided as required in each station-specific chapter and appendix.

An ODCM Bases and Reference Document (see Reference 101) provides description of the bases for the methodology and parameters discussed in the generic section of the ODCM. This is a stand-alone document and is not considered to be a part of the ODCM.

CHAPTER 2

REGULATIONS AND GUIDELINES

2.0 INTRODUCTION

This chapter of the ODCM serves to illustrate the regulations and requirements that define and are applicable to the ODCM. Any information provided in the ODCM concerning specific regulations are not a substitute for the regulations as found in the CFR or Technical Specifications.

2.1 CODE OF FEDERAL REGULATIONS

Various sections of the Code of Federal Regulations (CFR) require nuclear power stations to be designed and operated in a manner that limits the radiation exposure to members of the public. These sections specify limits on offsite radiation doses and on effluent radioactivity concentrations and they also require releases of radioactivity to be "As Low As Reasonably Achievable". These requirements are contained in 10CFR20, 10CFR50 and 40CFR190. In addition, 40CFR141 imposes limits on the concentration of radioactivity in drinking water provided by the operators of public water systems.

2.1.1 10CFR20, Standards for Protection Against Radiation

This revision of the ODCM addresses the requirements of 10CFR20. The 10CFR20 dose limits are summarized in Table 2-1.

2.1.2 Design Criteria (Appendix A of 10CFR50)

Section 50.36 of 10CFR50 requires that an application for an operating license include proposed Technical Specifications. Final Technical Specifications for each station are developed through negotiation between the applicant and the NRC. The Technical Specifications are then issued as a part of the operating license, and the licensee is required to operate the facility in accordance with them.

Section 50.34 of 10CFR50 states that an application for a license must state the principal design criteria of the facility. Minimum requirements are contained in Appendix A of 10CFR50.

2.1.3 ALARA Provisions (Appendix I of 10CFR50)

Sections 50.34a and 50.36a of 10CFR50 require that the nuclear plant design and the station RETS have provisions to keep levels of radioactive materials in effluents to unrestricted areas "As Low As Reasonably Achievable" (ALARA). Although 10CFR50 does not impose specific limits on releases, Appendix I of 10CFR50 does provide numerical design objectives and suggested limiting conditions for operation. According to Section I of Appendix I of 10CFR50, design objectives and limiting conditions for operation, conforming to the guidelines of Appendix I "shall be deemed a conclusive showing of compliance with the "As Low As Reasonably Achievable" requirements of 10CFR50.34a and 50.36a."

An applicant must use calculations to demonstrate conformance with the design objective dose limits of Appendix I. The calculations are to be based on models and data such that the actual radiation exposure of an individual is "unlikely to be substantially underestimated" (see 10CFR50 Appendix I, Section III.A.1).

The guidelines in Appendix I call for an investigation, corrective action and a report to the NRC whenever the calculated dose due to the radioactivity released in a calendar quarter exceeds one-half of an annual design objective. The guidelines also require a surveillance program to monitor releases, monitor the environment and identify changes in land use.

2.1.4 40CFR190, Environmental Radiation Protection Standards for Nuclear Power Operations

Under an agreement between the NRC and the EPA, the NRC stipulated to its licensees in Generic Letter 79-041 that "Compliance with Radiological Effluent Technical Specifications (RETS), NUREG-0472 (Rev.2) for PWR's or NUREG-0473 (Rev.2) for BWR's, implements the LWR provisions to meet 40CFR190". (See Reference 103 and 49.)

The regulations of 40CFR190 limit radiation doses received by members of the public as a result of operations that are part of the uranium fuel cycle. Operations must be conducted in such a manner as to provide reasonable assurance that the annual dose equivalent to any member of the public due to radiation and to planned discharges of radioactive materials does not exceed the following limits:

- 25 mrem to the whole body
- 75 mrem to the thyroid
- 25 mrem to any other organ

An important difference between the design objectives of 10CFR50 and the limits of 40CFR190 is that 10CFR50 addresses only doses due to radioactive effluents. 40CFR190 limits doses due to effluents and also to radiation sources maintained on site. See Section 2.4 for further discussion of the differences between the requirements of 10CFR50 Appendix I and 40CFR190.

2.1.5 40CFR141, National Primary Drinking Water Regulations

The following radioactivity limits for community water systems were established in the July, 1976 Edition of 40CFR141:

- Combined Ra-226 and Ra-228: $\leq$ 5 pCi/L.
- Gross alpha (particle activity including Ra-226 but excluding radon and uranium): $\leq$ 15 pCi/L.
- The average annual concentration of beta particle and photon radioactivity from man-made radionuclides in drinking water shall not produce an annual dose equivalent to the whole body or any internal organ greater than 4 mrem/yr.

The regulations specify procedures for determining the values of annual average radionuclide concentration which produce an annual dose equivalent of 4 mrem. Radiochemical analysis methods are also specified. The responsibility for monitoring radioactivity in a community water system falls on the supplier of the water. However, some of the ComEd stations have requirements related to 40CFR141 in their specific RETS. For calculational methodology, see Section A.6 of Appendix A.

2.2 RADIOLOGICAL EFFLUENT TECHNICAL STANDARDS

The Radiological Effluent Technical Standards (RETS) were formerly a subset of the Technical Specifications. They implement provisions of the Code of Federal Regulations aimed at limiting offsite radiation dose. The NRC published Standard Radiological Effluent Technical Specifications for PWRs (Reference 2) and for BWRs (Reference 3) as guidance to assist in the development of technical specifications. These documents have undergone frequent minor revisions to reflect changes in plant design and evolving regulatory concerns. The Radiological Effluent Technical Specifications have been removed from the Technical Specifications and placed in the ODCM as the Radiological Effluent Technical Standards (RETS) (see Reference 90). The RETS of each station are similar but not identical to the guidance of the Standard Radiological Effluent Technical Specifications.

2.2.1 Categories

The major categories found in the RETS are the following:

- **Definitions**
  A glossary of terms (not limited to the ODCM).

- **Instrumentation**
  This section states the Operability Requirements (OR) for instrumentation performance as well as the associated Surveillance Requirements. The conservative alarm/trip setpoints ensure regulatory compliance for both liquid and gaseous effluents. Surveillance requirements are listed to ensure ORs are met through testing, calibration, inspection and calculation. Also included are the bases for interpreting the requirements. The Operability Requirement (OR) is the ODCM equivalent of a Limiting Condition for Operation (LCO) as defined in both the NRC published Standard Radiological Effluent Technical Specifications and the stations' Technical Specifications.

- **Liquid Effluents**
  This section addresses the limits, special reports and liquid waste treatment systems required to substantiate the dose due to liquid radioactivity concentrations to unrestricted areas. Surveillance Requirements and Bases are included for liquid effluents.

- **Gaseous Effluents**
  This section addresses the limits, special reports and gaseous radwaste and ventilation exhaust treatment systems necessary for adequate documentation of the instantaneous offsite radiation dose rates and doses to a member of the public. Surveillance Requirements and Bases are included for gaseous effluents.

- **Radiological Environmental Monitoring Program**
  This section details the Radiological Environmental Monitoring Program (REMP) involving sample collection and measurements to verify that the radiation levels released are minimal. This section describes the annual land use census and participation in an interlaboratory comparison program. Surveillance Requirements and Bases are included for environmental monitoring.

- **Reports and Records**
  This section serves as an administrative guide to maintain an appropriate record tracking system. The management of procedures, record retention, review/audit and reporting are discussed.

2.3 OFFSITE DOSE CALCULATION MANUAL

The NRC in Generic Letter 89-01 defines the ODCM as follows (not verbatim) (see Reference 90):

> The Offsite Dose Calculation Manual (ODCM) shall contain the methodology and parameters used in the calculation of offsite doses resulting from radioactive gaseous and liquid effluents, in the calculation of gaseous and liquid effluent monitoring Alarm/Trip Setpoints, and in the conduct of the Radiological Environmental Monitoring Program. The ODCM shall also contain (1) the Radioactive Effluent Controls and Radiological Environmental Monitoring Programs and (2) descriptions of the Information that should be included in the Annual Radiological Environmental Operating and Annual Radioactive Effluent Release Reports.

Additional requirements for the content of the ODCM are contained throughout the text of the RETS.

2.4 OVERLAPPING REQUIREMENTS

In 10CFR20, 10CFR50 and 40CFR190, there are overlapping requirements regarding offsite radiation dose and dose commitment to the whole body. In 10CFR20.1301 the total effective dose equivalent to a member of the public is limited to 100 mrem per calendar year. In addition, Appendix I to 10CFR50 establishes design objectives on annual total body dose or dose commitment of 3 mrem per reactor for liquid effluents and 5 mrem per reactor for gaseous effluents (see 10CFR50 Appendix I, Sections II.A and II.B.2(a)). Finally, 40CFR190 limits annual whole body dose or dose commitment to a member of the public to 25 mrem due to all uranium fuel cycle operations.

While these dose limits/design objectives appear to overlap, they are different and each is addressed separately by the RETS. Calculations are made and reports are generated to demonstrate compliance to all regulations. Refer to Tables 2-1, 2-2 and 2-3 for additional information regarding instantaneous effluent limits, design objectives and regulatory compliance.

2.5 Dose Receiver Methodology

Table 2-2 lists the location of the dose recipient and occupancy factors, if applicable. In general, the dose receiver spends time in the locations that result in maximum direct dose exposure and inhales and ingests radioactivity at locations that yield maximum pathway doses. Thus, the dose calculated is very conservative compared to the "average" (or typical) dose recipient who does not go out of the way to maximize radioactivity uptakes and exposure.

Finally Table 2-3 relates the dose component (or pathway) to specific ODCM equations and the appropriate regulation.

Table 2-1

Regulatory Dose Limit Matrix

REGULATION	DOSE TYPE		DOSE LIMIT(s)		ODCM EQUATION
Airborne Releases:			(quarterly)	(annual)	
10CFR50 App. I[3]	Gamma Dose to Air due to Noble Gas Radionuclides (per reactor unit)		5 mrad	10 mrad	A-1
	Beta Dose to Air Due to Noble Gas Radionuclides (per reactor unit)		10 mrad	20 mrad	A-2
	Organ Dose Due to Specified Non-Noble Gas Radionuclides (per reactor unit)		7.5 mrem	15 mrem	A-13
	Total Body and Skin Dose (if air dose is exceeded)	Total Body	2.5 mrem	5 mrem	A-6
		Skin	7.5 mrem	15 mrem	A-7
Technical Specifications	Whole Body Dose Rate Due to Noble Gas Radionuclides (instantaneous limit, per site)		500 mrem/yr		A-8
	Skin Dose Rate Due to Noble Gas Radionuclides (instantaneous limit, per site)		3,000 mrem/yr		A-9
	Organ Dose Rate Due to Specified Non-Noble Gas Radionuclides (instantaneous limit, per site)		1,500 mrem/yr		A-28
Liquid Releases:			(quarterly)	(annual)	
10CFR50 App. I[3]	Whole (Total) Body Dose (per reactor unit)		1.5 mrem	3 mrem	A-29
	Organ Dose (per reactor unit)		5 mrem	10 mrem	A-29
Technical Specifications	The concentration of radioactivity in liquid effluents released to unrestricted areas		Ten (10) times the concentration values listed in 10CFR20 Appendix B; Table 2, Column 2, Table C-6 of Appendix C for Noble Gases		A-32
Total Doses [1]:					
10 CFR 20.1301 (a)(1)	Total Effective Dose Equivalent		100 mrem/yr		A-38
10CFR20.1301 (d) and 40CFR190	Whole Body Dose		25 mrem/yr		A-35
	Thyroid Dose		75 mrem/yr		A-37
	Other Organ Dose		25 mrem/yr		A-37
Other Limits [2]:					
40CFR141	Whole Body Dose Due to Drinking Water From Public Water Systems		4 mrem/yr		A-30
	Organ Dose Due to Drinking Water From Public Water Systems		4 mrem/yr		A-30

[1] These doses are calculated considering all sources of radiation and radioactivity in effluents.

[2] These limits are not directly applicable to nuclear power stations. They are applicable to the owners or operators of public water systems. However, the RETS of some of the ComEd nuclear power stations require assessment of compliance with these limits. For additional information, see Section A.6 of Appendix A.

[3] Note that 10CFR50 provides design objectives not limits.

TABLE 2-2

DOSE ASSESSMENT RECEIVERS

Dose Component or Pathway	Location; Occupancy if Different than 100%
"Instantaneous" dose rates from airborne radioactivity	Unrestricted area boundary location that results in the maximum dose rate
"Instantaneous" concentration limits in liquid effluents	Point where liquid effluents enter the unrestricted area
Annual average concentration limits for liquid effluents	Point where liquid effluents enter the unrestricted area
Direct dose from contained sources	Receiver spends part of this time in the controlled area and the remainder at his residence or fishing nearby; occupancy factor is considered and is site-specific. See Appendix F, Table F-8 for occupancy factors.
Direct dose from airborne plume	Receiver is at the unrestricted area boundary location that results in the maximum dose.
Direct dose from radioactivity deposited on the ground	Receiver is at the unrestricted area boundary location with the highest D/Q.
Inhalation dose from airborne effluents	Receiver is at the unrestricted area boundary location that results in maximum dose.
Ingestion dose from vegetables	Receiver eats vegetables from the garden at the nearest residence with the highest D/Q
Ingestion dose from milk	Receiver drinks milk from the near-site dairy farm with the highest D/Q
Ingestion dose from meat	Receiver eats meat produced at the near-site farm with the highest D/Q
Ingestion dose from drinking water[1]	The drinking water pathway is considered as an additive dose component in this assessment only if the public water supply serves the community immediately adjacent to the plant.
Ingestion dose from eating fish	The receiver eats fish from the receiving body of water (lake or river)
Total Organ Doses	Summation of ingestion/inhalation doses
Total Effective Dose Equivalent	Summation of above data

[1] At present, only the Braidwood and Zion station assessments include the drinking water pathway for 10CFR20 compliance.

TABLE 2-3

DOSE COMPONENT/REGULATION MATRIX

Dose Component or Pathway	Reference equation; Comments	Regulation in which dose component is utilized		
		10CFR20	40CFR190	10CFR50 App. I
"Instantaneous" dose rates from airborne radioactivity	A-8: Whole body A-9: Skin A-28: Organ	X(2)		
"Instantaneous" concentration limits in liquid effluents	Ten times the limits of Table 2, Col. 2,10CFR20, Appendix B to §§20.1001 – 20.2402, Table C-6 of Appendix C for Noble Gases	X(2)		
Annual average concentration limits for liquid effluents	10CFR20, Appendix B to §§20.1001 – 20.2402(2)	X(3)		
Direct dose from contained sources	A-34	X	X	
Direct dose from airborne plume	A-1: Gamma air dose A-2: Beta air dose A-6: Whole body dose A-7: Skin dose	X	X	X X X X
Direct dose from radioactivity deposited on the ground	A-14	X	X	X
Inhalation dose from airborne effluents	A-17 (1)	X	X	X
Ingestion dose from vegetables	A-23 and A-18 (1)	X	X	X
Ingestion dose from milk	A-25 and A-18 (1)	X	X	X
Ingestion dose from meat	A-27 and A-18 (1)	X	X	X
Ingestion dose from drinking water	A-30 (1)	X	X	X
Ingestion dose from eating fish	A-31 (1)	X	X	X
Total Organ Doses	A-13		X	X
Total Effective Dose Equivalent	A-38	X		

1 Ingestion/inhalation dose assessment is evaluated for adult/teen/child and infant for 10CFR50 Appendix I compliance and for an adult for 10CFR20/40CFR190 compliance. Ingestion/inhalation dose factors are taken from Reg. Guide 1.109 (Reference 6) for 10CFR50 Appendix I compliance and FGR-11 (Reference 93) for 10CFR20/40CFR190 compliance.

2 Technical Specifications for most stations have been revised to allow 10 times the 10CFR20 value or specifically states the maximum instantaneous dose rate limit.

3 Optional for 10CFR20 compliance.

Figure 2-1

Simplified Chart of Offsite Dose Calculations[2]

Category	Radionuclides	Pathway	Text Section	Receptor	Code and Limits	Frequency of Calculation[1]
Airborne	Releases:					
	Noble Gases:	Plume γ[a]	A.1.3.1	Total Body	RETS: 500 mrem/yr Instantaneous	As Required by
	Noble Gases:	Plume γ[a] and β[b]	A.1.3.2	Skin	RETS: 3000 mrem/yr Instantaneous	Station Procedure
	Noble Gases:	Plume γ[a]	A.1.2.1	Air[4]	10CFR50[3]: 5 mrad/qtr, 10 mrad/yr	Monthly
	Noble Gases:	Plume β[b]	A.1.2.2		10CFR50[3]: 10 mrad/qtr, 20 mrad/yr	
	Non-Noble Gases:	Inhalation[b]	A.1.5	Adult (Any Organ)	RETS: 1500 mrem/yr Instantaneous	As required by Station Procedure
	Non-Noble Gases:	Ground Deposition[c]	A.1.4.1	Whole body	10CFR50[3]: 7.5 mrem/qtr, 15 mrem/yr	Monthly and Annually
		Inhalation	A.1.4.2	4 Age groups (All Organs)		
		Leafy Vegetables[c]	A.1.4.3.1			
		Produce[c]	A.1.4.3.1			
		Milk[d]	A.1.4.3.2			
		Meat[d]	A.1.4.3.3			
Liquid	Releases:					
	All	Water	A.2.2		RETS, 10 times 10CFR20 Appendix B; Table 2; Col. 2, Table C-6 of Appendix C for Noble Gases	As Required by Station Procedure
	Non-Noble Gases	Water[e] and Fish[f]	A.2.1	Whole Body	10CFR50[3]: 1.5 mrem/qtr 3 mrem/yr	Monthly
	Non-Noble Gases	Water[e] and Fish[f]	A.2.1	4 Age Groups (All Organs)	10CFR50[3]: 5 mrem/qtr 10 mrem/yr	
	Non-Noble Gases	Water[e]	A.6	Adult (Whole Body and all Organs)	40CFR141: 4 mrem/yr	When Required by RETS
Uranium Fuel Cycle:	All	All releases plus direct radiation from contained sources	A.3	Whole Body	40CFR190: 25 mrem/yr	Annually
				Thyroid (Adult)	40CFR190: 75 mrem/yr	
				All Other Organs (Adult)	40CFR190: 25 mrem/yr	
TEDE:	All	External (DDE) + Internal (CEDE)	A.4.3	Total Body + organs (Adult)	10CFR20: 100 mrem/yr	Annually

Figure 2-1 (Cont'd)

Notes for Figure 2-1:

1. Definition: Monthly means at least once per 31 days or once per month. See station RETS for exact requirements.

2. Additional Calculations: In addition to the calculations shown in this figure, monthly projections of doses due to radioactive materials are required for gaseous and liquid effluents from ComEd nuclear power stations. See Sections A.1.6 and A.2.5 of Appendix A.

   Also, projections of drinking water doses are required at least once per 92 days for Dresden and Quad Cities. See Section A.7 of Appendix A.

3. 10 CFR 50 prescribes design objectives not limits.

4. If the air dose is exceeded, doses to the total body and skin are calculated. Total body objectives are 2.5 mrem/qtr and 5.0 mrem/year; the skin dose objectives are 7.5 mrem/qtr and 15 mrem/year.

a Evaluated at the unrestricted area boundary.

b Evaluated at the location of maximum offsite X/Q.

c Evaluated at the location of maximum offsite D/Q.

d Evaluated for the nearest producer within 5 miles or if there is none a hypothetical producer at 5 miles.

e Evaluated for the nearest downstream community water supply as specified in Table A-3 of Appendix A. The flow and dilution factors specified in Table F-1 of Appendix F are used.

f Evaluated for fish caught in the near-field region downstream of plant using the flow and dilution factors specified in Table F-1 of Appendix F.

CHAPTER 3

EXPOSURE PATHWAYS

3.0 INTRODUCTION

Figure 3-1 illustrates some of the potential radiation exposure pathways to humans due to routine operation of a nuclear power station. These exposure pathways may be grouped into three categories:

- **Airborne Releases**
  Exposures resulting from radioactive materials released with gaseous effluents to the atmosphere.

- **Liquid Releases**
  Exposures resulting from radioactive materials released with liquid discharges to bodies of water.

- **Radiation from Contained Sources**
  Exposures to radiation from contained radioactive sources.

When performing radiation dose calculations, only exposure pathways that significantly contribute (≥ 10%) to the total dose of interest need to be evaluated. The radiation dose from air and water exposure pathways are routinely evaluated. (see Regulatory Guide 1.109, Reference 6.)

3.1 AIRBORNE RELEASES

For airborne releases of radioactivity (Figure 3-1), the NRC considers the following pathways of radiation exposure of persons:

- Radiation from radioactivity airborne in the effluent plume.
- Radiation from radioactivity deposited by the plume on the ground.
- Ingestion of radioactivity on, or in, edible vegetation (from direct plume deposition or from the transfer of radioactivity deposited on the soil).
- Ingestion of radioactivity that entered an animal food product (milk or meat) because the animal ingested contaminated feed, with the contamination due either to direct deposition on foliage or to uptake from the soil.
- Inhalation of radioactivity in the plume.

ComEd considers these same pathways with the exception that the transfer of radioactivity from soil to vegetation is omitted. This pathway was determined to be of minimal significance in relation to the other airborne exposure pathways.

3.2 LIQUID RELEASES

For liquid releases of radioactivity (Figure 3-1), the NRC considers the following pathways of radiation exposure of persons:

- Direct exposure to radioactivity in water while engaging in recreational activities such as swimming and boating.
- Exposure to radiation from shoreline sediments contaminated by water containing radioactivity from station liquid discharges.
- Ingestion of edible vegetation contaminated by irrigation with water containing radioactivity from station liquid discharges.

- Ingestion of radioactivity from animal food products (milk or meat) resulting from the animal either drinking water contaminated by radioactive liquid effluents or from the animal eating feed or vegetation contaminated by irrigation with such water.
- Ingestion of aquatic food (e.g., fish) obtained from the body of water to which radioactive station effluents are discharged.
- Ingestion (drinking) of potable water contaminated by radioactive liquid effluents discharged from the station.

ComEd considers the latter two of these pathways as significant. For the aquatic food pathway, only fish is considered since it is the only significant locally produced aquatic food consumed by humans.

The stations omit the pathways involving irrigation and animal consumption of contaminated water because these pathways were determined to be insignificant. The stations also omit the pathway of radiation exposure from shoreline sediment because this pathway was also found to be insignificant (see ODCM Bases and Reference Document, Section O.3.2).

The stations have also verified that the dose contribution to people participating in water recreational activities (swimming and boating) is negligible. (See ODCM Bases and Reference Document, Reference 101, Tables O-3 and O-4) This pathway was not addressed explicitly in Regulatory Guide 1.109. Thus, the stations also omit dose assessments for the water recreational activities pathway.

Periodically the Illinois Army Corps of Engineers dredges silt and debris from the river beds near ComEd nuclear stations. As a part of the land use census, ComEd will determine if the Corps performed dredging within one mile of the discharge point. If so, ComEd will obtain spoils samples, through it's REMP vendor, for analysis. The impact to the offsite dose will be evaluated on a case by case basis and added to the station annex of the ODCM when applicable.

In addition, to assure that doses due to radioactivity in liquid effluents will be ALARA, concentrations will be limited to ten times (10x) the values given in 10CFR20 Appendix B, Table 2; Column 2. Specific limitations for concentrations of entrained noble gases are contained in the stations' Radiological Effluent Technical Standards (RETS).

3.3 RADIATION FROM CONTAINED SOURCES

Radioactivity contained within tanks, pipes or other systems and contained radioactive material or waste stored on site can produce radiation at offsite locations. Annual offsite radiation doses near the stations due to such sources were judged to be negligible in comparison with applicable limits except for doses due to BWR turbine skyshine and potential doses due to radioactive waste storage facilities (excludes radioactive material storage). See ODCM Bases and Reference Document, Reference 101. Changes or modifications to the power station that may impact the offsite dose through increases to the direct radiation levels need to be evaluated on a case by case basis and added to Chapter 12 of the station annex to the ODCM when applicable (e.g.; the Old Steam Generator Storage Facilities).

Figure 3-1

Radiation Exposure Pathways to Humans

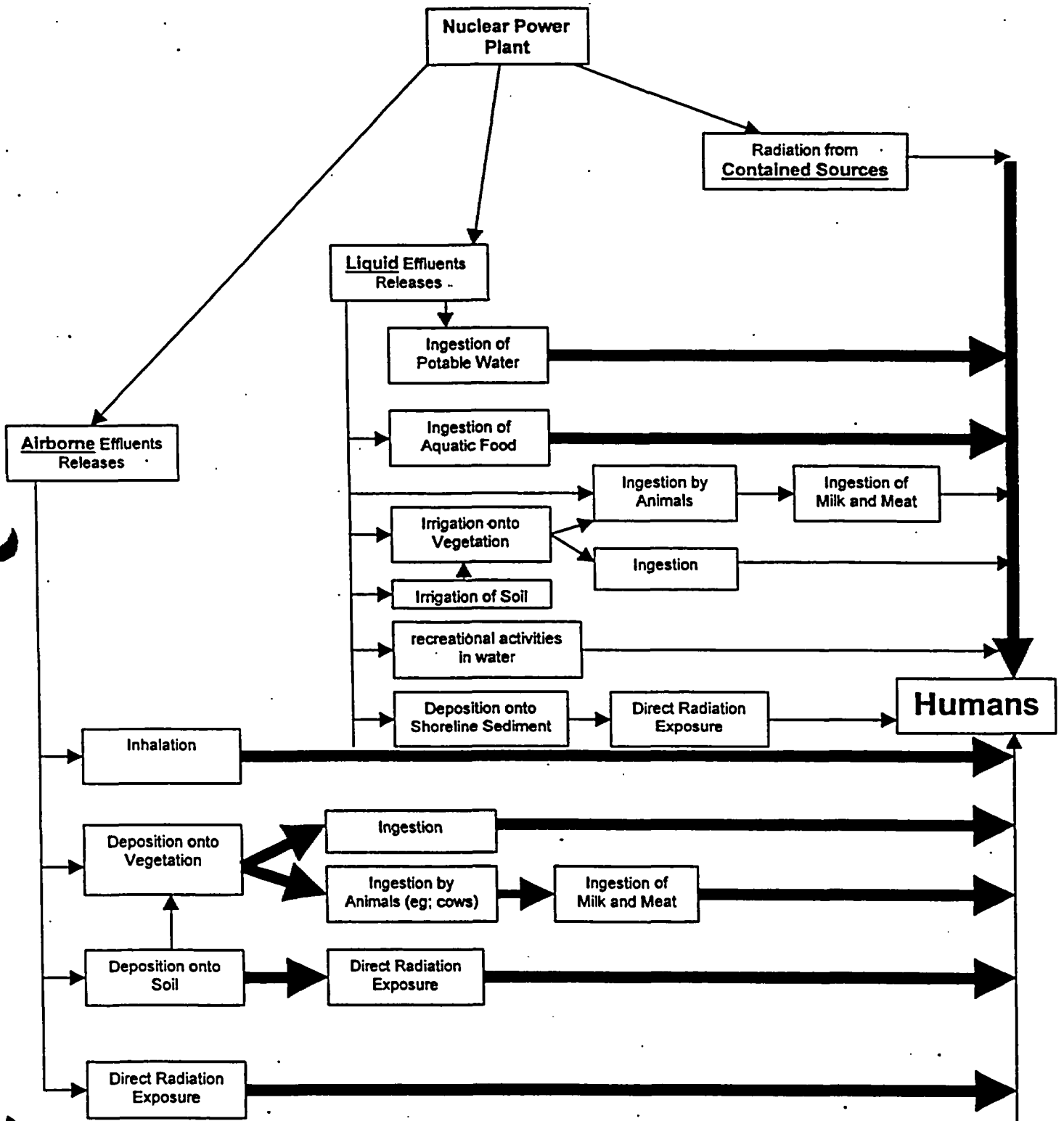

CHAPTER 4

METHODOLOGY

4.0 INTRODUCTION

This chapter provides an introduction to the methodology used by ComEd to calculate offsite radiation doses resulting from the operation of nuclear power stations. Additional explanation and details of the methodology are provided in Appendices A and B. Appendix A discusses each dose limit in the RETS and provides the associated assessment equations. Appendix B describes methods used to determine values of parameters included in the equations.

4.1 IMPORTANT CONCEPTS AND PARAMETERS

4.1.1 Dose and Dose Commitment

The dose calculation equations contained in the ODCM are based on two types of exposure to radiation; external and internal exposure. The first type of exposure is that resulting from radioactive sources external to the body (including radiation emanating from an effluent plume, radiation emanating from radioactivity deposited on the ground and radiation emanating from contained sources (also referred to as direct radiation)). Exposure to radiation external to the body only occurs while the source of the radioactivity is present. For example, once a plume containing the airborne radioactivity passes by the individual, the external exposure to radiation ends.

The second type of exposure occurs when the source of radioactivity is inside the body, or internal. Radiation can enter the body by breathing air containing the radioactivity, or by eating food or drinking water containing radioactivity. These latter processes are also referred to as ingesting radioactivity (ingestion). Once radioactivity enters the body and becomes internal radiation, a person will continue to receive radiation dose until the radioactivity has decayed or is eliminated by biological processes. The dose from this type of exposure is also termed dose commitment, meaning that the person will continue to receive dose even-though the plume containing the radioactivity has passed by the individual, or even-though the individual is no longer drinking water containing radioactivity.

The regulations addressed by the ODCM may require assessment of either type of exposure to radiation or of both types in summation.

4.1.2 Exposure Pathways

All of the exposure pathways are discussed in Chapter 3. This section presents the exposure pathways addressed by ComEd nuclear stations in the ODCM and associated software.

For releases of radioactivity in airborne effluents the primary pathways are the following:

- Direct radiation from an effluent plume.
- Direct radiation from radioactivity deposited on the ground by a plume.
- Inhalation of radioactivity in a plume.
- Ingestion of radioactivity that entered the food chain from a plume that deposited the radioactivity on vegetation.

For releases of radioactivity in liquid effluents, the exposure pathways considered are human consumption of water and fish.

When determining total doses, as required by 10CFR20 and 40CFR190, the BWR stations also consider direct radiation due to skyshine from nitrogen-16 (N^{16}) in turbines and associated piping. All nuclear

power stations will consider exposure to radiation emanating from onsite radwaste storage facilities when they are put into operation.

4.1.3 Categories of Radioactivity

Radionuclide content of effluent releases from nuclear power stations can be categorized according to the characteristics of the radionuclides. In evaluating doses associated with a particular pathway, only those categories of radionuclides that significantly contribute to the dose need to be included in the dose calculations (See Section 3.0). The categories of radionuclides considered by the ComEd nuclear power stations for each of the airborne pathways are summarized in Table 4-1. Selection of the significant airborne pathways was based on the following:

- The requirements in the RETS (see discussion in Appendix A)
- Applicable regulatory guidance (References 6 and 14), and
- A study of the potential radiological implications of nuclear facilities in the upper Mississippi River basin (Reference 20).

Calculations were used to determine which radionuclides were significant for a particular pathway. For example, in the case of direct radiation from a plume of airborne radioactivity, it was found that radiation from noble gases is significant and radiation from radioactive iodine was not. The dose rate per unit of airborne radioactivity concentration is about the same for noble gases and radioactive iodine since they emit comparable types and energies of radiation. However, the quantity of noble gas radioactivity (Ci) released in routine nuclear plant operation typically exceeds the quantity of radioactive iodine by a factor of about 10,000.

As another example, consider the inhalation pathway. Here, the calculations showed that the dose commitment due to radioactive iodine was significant but the dose commitment due to radioactive noble gases was not significant and can be excluded from the compliance calculations for the inhalation pathway. This is true despite the fact that a much larger quantity of noble gas radioactivity is released. The reason for this is that the solubility of noble gas in body tissue is very low, where-as the inhaled radioactive iodine does concentrate in specific body organs such as the thyroid (see the discussion on Pages 228 and 231 to 234 of Reference 38).

4.1.4 Release Point Classifications

In the determination of the dose consequence from an airborne release of radioactivity, it is required to know the height of the release of the effluent plume relative to the ground and where the dose recipients are located. This correlation is very important because the radiation dose calculated is greatly impacted by the distance separating the dose recipient and the radioactive plume.

It has been found that the height an effluent plume maintains as it travels above the ground is related to the elevation of the release point and to the height of structures immediately adjacent as follows:

- If the elevation of the release point is sufficiently above the height of any adjacent structures, the plume will remain elevated for considerable distances.
- If the elevation of the release point is at or below the heights of adjacent structures, the plume is likely to be caught in the turbulence of the wakes created by wind passing over the buildings. The plume elevation would then drop to ground level.
- If the elevation of the release point is not significantly above the heights of adjacent structures, then the plume may be elevated or at ground level.

For the calculations of this manual, each established release point has been designated as belonging to one of three release point classifications:

- Stack (or Elevated) Release Points (denoted by the letter S or subscript s)

  These are release points approximately twice the height of adjacent solid structures. Releases are treated as elevated releases unaffected by the presence of the adjacent structures.

- Ground Level Release Points (denoted by the letter G or subscript g)

  These are release points at ground level or lower than adjacent solid structures. Releases are considered drawn into the downwind wake of these structures and are treated as ground level releases.

- Vent (or Mixed Mode) Release Points (denoted by the letter V or subscript v)

  These are release points as high or higher than adjacent solid structures but lower than twice the structure's heights. These releases are treated as a mixture of elevated and ground level releases. The proportion of the release attributed to either elevated or ground level in a vent release is determined by the ratio of stack exit velocity to the wind speed (see Section B.1.2.4 of Appendix B).

The definitions of these classifications are based on Regulatory Guide 1.111 (Reference 7). A list of the classifications of specific airborne release points for each of the ComEd nuclear power stations is contained in Table A-2 in Appendix A.

4.1.5 Historical Average Atmospheric Conditions

The dispersion characteristics of airborne effluents from a nuclear power station are dependent on weather conditions. Meteorological factors that directly affect the concentration of airborne radioactivity in a plume include the following:

- Wind Direction

  The concentration of radioactivity is highest in the direction toward which the wind is blowing.

- Wind Speed

  Greater wind speeds produce more dispersion and consequently lower concentrations of radioactivity.

- Atmospheric Turbulence

  The greater the atmospheric turbulence, the more a plume spreads both vertically and horizontally. For calculations in this manual, the degree of turbulence is classified by use of seven atmospheric stability classes, designated A (extremely unstable) through G (extremely stable). The seven classes and some of their characteristics are listed in Table C-4 of Appendix C.

Meteorological conditions strongly impact the values of various parameters applied in the dose calculations of this manual. These include:

- The Relative Concentration Factor X/Q (Section 4.1.6)
- The Relative Deposition Factor D/Q (Section 4.1.7)

- The Gamma Air Dose Factor (Section 4.2.1)
- The Whole Body Dose Factor (Section 4.2.3)

Some bases sections of both the Standard Radiological Effluent Technical Specifications (guidance document) and the RETS specify that dose calculations be based on "historical average atmospheric conditions". Therefore, this manual provides values for the above parameters that are based on station-specific historical average meteorological conditions. These values were obtained by averaging hourly values of the parameters over a long-term, several-year, period of record. The averaging period was based on calendar years in order to avoid any bias from weather conditions associated with any one season. The period of record is identified in each of the tables providing the values (see Appendix F).

4.1.6 Relative Concentration Factor X/Q

A person immersed in a plume of airborne radioactivity is exposed to radiation from the plume and may also inhale some of the radioactivity from the plume. The concentration of radioactivity in air near the exposed person must be calculated to adequately evaluate doses resulting from any inhalation. The relative concentration factor X/Q (referred to as "chi over Q") is used to simplify these calculations. X/Q is the concentration of radioactivity in air, at a specified location, divided by the radioactivity release rate. X/Q has the following units:

$$\text{Units of } X/Q = (\mu Ci/m^3) / (\mu Ci/sec) = sec/m^3$$

Station-specific values of X/Q are provided for each nuclear power station in Table F-5 of Appendix F. These values are based on historical average atmospheric conditions (see Section 4.1.5).
For each of the release point classifications (eg. stack, vent and ground level) and for the 16 compass-direction sectors (N, NNE, etc.), Table F-5 provides the maximum value of X/Q for locations at or beyond the unrestricted area boundary.

The value of X/Q for each sector reflects the fraction of time that the wind blew into that sector and the distribution of wind speeds and atmospheric stability classes during that time. Note that the value would be zero if the wind never blew into the sector.

The methodology for determining X/Q is discussed in detail in Section B.3 of Appendix B.

4.1.7 Relative Deposition Factor D/Q

As a plume travels away from its release point, portions of the plume may touch the ground and deposit radioactivity on the ground and/or on vegetation. Occurrences of such deposition are important to model since any radioactivity deposited on the ground or on vegetation may directly expose people and/or may be absorbed into food products which can ultimately be ingested by people. The relative deposition factor is used to simplify the dose calculations for these pathways.

The relative deposition factor D/Q is the rate of deposition of radioactivity on the ground divided by the radioactivity release rate. Its value was determined for specific conditions. In this manual it has the following units:

$$\text{Units of } D/Q = [(pCi/sec)/m^2] / (pCi/sec) = 1/m^2$$

The values of D/Q are affected by the same parameters that affect the values of X/Q: release characteristics; meteorological conditions and location (see Section 4.1.6). Station-specific values of D/Q are provided for each ComEd nuclear power station in Appendix F Tables F-5 and F-6. These values are based on historical average atmospheric conditions (see Section 4.1.5).

For each release point classification and for each of the 16 compass-direction sectors (N, NNE, etc.), Table F-5 provides the maximum value of D/Q for locations at or beyond the unrestricted area boundary. In Table F-6, values of D/Q are given for the locations of the nearest milk and meat producers within 5 miles of the nuclear power station. The methodology for determining D/Q is discussed in Section B.4 of Appendix B.

4.1.8 Dose Factors

Various dose factors are used in this manual to simplify the calculation of radiation doses. These factors are listed in Table 4-2. Definitions of these factors are given in the remainder of this chapter. Methods of determining their values are addressed in Appendix B.

4.2 AIRBORNE RELEASES

4.2.1 Gamma Air Dose

The term 'gamma air dose' refers to the component of dose absorbed by air resulting from the absorption of energy from photons emitted during nuclear and atomic transformations, including gamma rays, x-rays, annihilation radiation, and Bremsstrahlung radiation (see footnote on page 1.109-19 of Regulatory Guide 1.109).

The Gamma Air Dose Factor

The gamma air dose factor is the gamma air dose rate divided by the radioactivity release rate. The value of the gamma air dose factor is determined by calculating the gamma dose rate to air (at a specific location and corresponding to a given release rate) and dividing that dose rate by the corresponding release rate:

Gamma Air Dose Factor = [(mrad/yr)/(μCi/sec)]

The methodology for this calculation is discussed in Section B.5 of Appendix B. The calculation is complex because the dose rate at any given point is affected by the radioactivity concentration and distance. The value of the gamma air dose factor is also affected by all of the parameters that affect X/Q: release characteristics, meteorological conditions and location (see Section 4.1.6). Additionally, the value is affected by radiological parameters: the distribution of energies and intensities for gamma emissions from each specific radionuclide and the photon attenuation characteristics of air.

In the ODCM, station-specific values of gamma dose factors are provided for each station in Appendix F, Table F-7. These values are based on historical average atmospheric conditions (see Section 4.1.5). For the release point classification and for each of the 16 compass-direction sectors, Table F-7 provides the maximum value of the gamma air dose factor for noble gas radionuclides at the unrestricted area boundary. The value includes a correction for radioactive decay during transport of the radionuclide from the release point to the dose calculation location.

4.2.2 Beta Air Dose

The term 'beta air dose' refers to the component of dose to air dose resulting from the absorption of energy from emissions of beta particles, mono-energetic electrons and positrons during nuclear and atomic transformations (see the footnote on Page 1.109-20 of Regulatory Guide 1.109).

The Beta Air Dose Factor

The beta air dose factor is the beta air dose rate divided by the concentration of radioactivity in air at the dose calculation location. Values of the beta air dose factor are different for each radionuclide because of the differences in electron-emission spectra. Values for the beta air dose factors of 15 noble gas radionuclides are provided in Appendix C Table C-9.

The values of beta air dose factors are independent of nuclear power station because the size of a plume, at or beyond the restricted area boundary, is large compared to the range of the beta particle radiation. Therefore, the radioactivity concentration can be assumed to be constant over the entire volume surrounding a given beta dose calculation point. One can then define the beta air dose factor as the beta dose rate per unit of air radioactivity concentration. This relationship is independent of station-specific parameters. In contrast to this, the gamma air dose may depend on radioactivity concentration hundreds of feet away from the dose calculation point (see Section 4.2.1). Therefore, when determining the value of the gamma air dose factor, the shape of the plume over a large region must be considered. Plume shape does depend on station-specific parameters such as meteorology and release point classification and therefore values of the gamma air dose factor are station-specific.

4.2.3 Whole Body Dose and Dose Rate

Whole Body Dose

Equation A-6 of Appendix A is used to calculate dose to the whole body from noble gas radionuclides released in gaseous effluents. The deep dose equivalent (DDE) (or whole body dose) equation is similar to that used to calculate gamma air dose (Equation A-1 of Appendix A).

Whole Body Dose Rate

Equation A-8 of Appendix A is used to calculate dose rate to the whole body. The assumptions used for this equation are the same as those used in the calculation of whole body dose (Equation A-6 of Appendix A) except that any shielding benefit (dose attenuation) provided by residential structures is not applied. Since the calculation is for the maximum instantaneous dose rate, the dose recipient may be out of doors when exposed and would not be shielded from the exposure by any structural material.

The Whole Body Dose Factor

The whole body dose factor is the whole body dose rate divided by the radioactive release rate. Values for the whole body dose factor depend on the same parameters as those that affect the gamma air dose factor (see Section 4.2.1). The whole body dose factor is a 10CFR50 term that yields a Deep Dose Equivalent when applied to the radioactive release rate.

Station-specific values for the whole body dose factor are provided for each ComEd nuclear power station in Appendix F, Table F-7. These values are based on historical average atmospheric conditions (see Section 4.1.5). For each of 15 noble gas radionuclides, for the release point classifications, and for each of the 16 compass-direction sectors, Table F-7 provides the maximum value of the whole body dose factor at the unrestricted area boundary. These values include a correction for radioactive decay during transport of the radionuclide from the release point to the dose calculation location.

The methodology for determining whole body dose factors is addressed in Section B.6 of Appendix B.

4.2.4 Skin Dose and Dose Rate

Skin Dose

Equation A-7 of Appendix A is used to calculate dose to skin from noble gas radionuclides released in gaseous effluents. The skin dose is also referred to as the 'shallow dose equivalent' (SDE). The SDE is the summation of dose to the skin from beta and gamma radiation.

The equation for beta dose to skin is similar to that used to calculate beta dose to air (Equation A-2 of Appendix A) except that beta skin dose factors are used instead of beta air dose factors. The beta skin dose factor differs from the beta air dose factor by accounting for the attenuation of beta radiation by the dead layer of skin. The dead layer of skin is not susceptible to radiation damage and therefore is not of concern. The beta dose to the skin from non-noble gases is insignificant and is not calculated for the reason described in Section 4.1.3. When calculating the beta contribution to skin dose, no reduction is included in the calculations due to shielding provided by occupancy of residential structures.

The equation for gamma dose to skin is similar to that used to calculate gamma dose to air except for the following:

- Equation A-7 of Appendix A includes a units conversion factor 1.11 rem/rad to convert from units of gamma air dose (rad) to units of tissue dose equivalent (rem).
- Equation A-7 of Appendix A includes a dimensionless factor of 0.7 to account for the shielding due to occupancy of residential structures.

Equation A-7 of Appendix A uses gamma air dose factors not gamma whole body dose factors. When calculating gamma dose to skin, no reduction is applied for the attenuation of radiation due to passage through body tissue (dead layer of skin).

Skin Dose Rate

Equation A-9 of Appendix A is used to calculate dose rate to skin. The assumptions are the same as those used in the calculation of skin dose (Equation A-7 of Appendix A) except that no credit is taken for shielding of gamma radiation by residential structures. The dose recipient may be outdoors when exposed and the maximum instantaneous dose rate is of concern.

The Skin Dose Factor

As with the beta air dose factor, values of the beta skin dose factors are different for different radionuclides but do not vary from station to station. Values of the beta air dose factors and skin dose factors are provided in Table C-9 of Appendix C for 15 noble gas radionuclides.

4.2.5 Ground Radiation

Equations A-14 through A-16 of Appendix A are used to calculate the deep dose equivalent (whole body dose) due to non-noble gas radionuclides released in gaseous effluents and deposited on the ground.

Comment
Note that if there is no release of radionuclide 'i' during a given time period, then the deposition rate is zero, the ground plane concentration is zero and the resulting dose due to ground deposition is zero. If there is a release of radionuclide 'i', the ground concentration is computed as if that release had been occurring at a constant rate for the ground deposition time period.

The Ground Plane Dose Conversion Factor

The ground plane dose conversion factor is the dose rate to the whole body per unit of radioactivity concentration on the ground. Values of the ground plane dose conversion factor that are calculated by assuming constant concentration over an infinite plane are provided for various radionuclides in Table C-10 of Appendix C. The values are the same for all stations. The station-specific aspects of the calculation of ground dose concern the determination of the radioactivity concentration on the ground.

4.2.6 Inhalation

Dose Commitment

Radioactivity from airborne releases of radioactive iodine, particulate, tritium, and carbon-14 can enter the body through inhalation. Equation A-17 of Appendix A is used to calculate dose commitment to the whole body or its organs due to inhalation of non-noble gas radionuclides released in gaseous effluents. This dose component is also referred to as the 'committed dose equivalent' (CDE).

The Inhalation Dose Commitment Factor

Values for the inhalation dose commitment factor are the same for all ComEd stations. The components of this factor are not impacted by station specific parameters. However, the dose commitment factors used for compliance with 10CFR20 and 10CFR50 Appendix I are different as noted below:

- Values of the inhalation dose commitment factor used in the 10CFR50, Appendix I assessment are exactly those listed in Reg. Guide 1.109 (Reference 6) Tables E-7, 8, 9 and 10. These tables include data for four age groups (adult, teenager, child and infant) and seven body organs.

- Values of the inhalation dose commitment factor used for determining 10CFR20 and 40CFR190 compliance are exactly those listed in Table 2.1 of Federal Guidance Report No. 11 (FGR-11) (Reference 93). These data are for an adult and are given for all significant organs.

Dose Commitment Rate

The inhalation dose commitment rate is the rate at which dose commitment is accrued by an individual breathing contaminated air. Equation A-28 of Appendix A is used to calculate dose commitment rate to an organ due to inhalation of non-noble gas radionuclides. The assumptions are the same as used in the calculation of inhalation dose commitment (Equation A-17 of Appendix A).

4.2.7 Ingestion

Airborne releases of radioactive iodine, particulate, tritium, and carbon-14 can enter the food chain through deposition on, or absorption by, vegetation. The radioactivity can be ingested by humans who consume the vegetation or who consume products (e.g., milk or meat) of animals who have fed on the contaminated vegetation. Each ComEd nuclear power station considers the following four ingestion pathways:

- Leafy vegetables,
- Produce (e.g. non-leafy vegetables, fruit, and grain),
- Milk, and
- Meat.

Equation A-18 of Appendix A is used to calculate the dose commitment due to ingestion of food containing non-noble gas radionuclides released in gaseous effluents.

Values of the ingestion dose commitment factor are the same for each ComEd nuclear power station. The components of this factor are not impacted by station specific parameters. The station-specific aspects of the calculation of ingestion dose only concern the quantity of radioactivity ingested. However, the ingestion dose commitment factors used for 10CFR20 and for 10CFR50 compliance are different as was noted previously in section 4.2.6. These differences are noted below:

- Values of the ingestion dose commitment factor used in the 10CFR50 Appendix I assessment are exactly those listed in Reg. Guide 1.109 Tables E-11, 12, 13 and 14. These tables include data for four age groups and seven organs.

- Values of the ingestion dose commitment factor used in the 10CFR20 assessment are exactly those listed in Table 2.2 of Federal Guidance Report No. 11 (Reference 93). These tables include data for an adult and are given for all organs.

The ingested activity is calculated by use of equations A-19 through A-22 of Appendix A. The food product radioactivity concentration is calculated from measurements of radioactivity in station releases. The different equations used for radioactivity concentration in vegetation, milk, and meat are also discussed in Appendix A.

4.3 LIQUID RELEASES

The evaluation of dose and dose rate due to releases of radioactivity in liquid effluents is required to confirm compliance with the provisions of RETS related to 10CFR50 Appendix I. ODCM Section 3.2 and Figure 3-1 list some of the pathways by which radioactivity in liquid effluents can impact man. The principal pathways used by ComEd to calculate dose from liquid effluents are ingestion by drinking water and by eating fish from the body of water receiving station liquid discharges. The nuclear power stations obtain the dose commitment due to radioactivity in liquid effluent releases by summing the dose commitments from both the drinking water and fish pathways.

Equations A-29, A-30 and A-31 of Appendix A are used to calculate committed dose equivalent (CDE) for the member of the public due to consumption of drinking water and fish.

The radioactivity concentration in water is obtained by dividing the quantity of radioactivity released by the volume of water in which the release is diluted (e.g., the flow is multiplied by the total time of the release in hours). The result is multiplied by the following:

- A factor to represent any additional dilution that might occur.
- A factor to account for radioactive decay from the time of release to the time of consumption.

The radioactivity concentration in fish is the product of the radioactivity concentration in water and a bio-accumulation factor. The dilution and radioactive decay factors for fish may be different from those for water. (The fish may be caught at a location different from where drinking water is drawn and the time period from the release of radioactivity to consumption may be different.)

The bio-accumulation factor accounts for the fact that the quantity of radioactivity in fish can build up with time to a higher value relative to the concentration of the radioactivity in the water they consume. The bio-accumulation factor is the equilibrium ratio of the concentration of radionuclide 'i' in fish to its concentration in water. The same values are used for the bio-accumulation factor at each station. These values are provided in Appendix C, Table C-8.

4.4 CONTAINED SOURCES OF RADIOACTIVITY

In addition to the whole body, skin and single organ dose assessments previously described, an additional assessment is required. The additional assessment addresses radiation dose due to radioactivity contained within the nuclear power station and its structures.

There are presently two types of contained sources of radioactivity which are of concern in offsite radiological dose assessments. The first is that due to gamma rays resulting from nitrogen-16 carry-over to the turbine in BWR steam (skyshine). The second is that due to gamma rays associated with radioactive material contained in onsite radwaste and rad material storage facilities.

4.4.1 BWR Skyshine

The most significant dose component to members of the public produced by "contained sources" is nitrogen-16 (N-16) within the turbine building of BWRs. Although primary side shielding is around the turbine and its piping, N-16 gamma rays scattered by air molecules in the overhead air space above the turbine and piping cause a measurable "skyshine" radiation dose in the local power plant environs.

Equation A-34 of Appendix A is used to evaluate skyshine dose. A complicating factor in the calculation is the practice at some stations of adding hydrogen to reactor coolant to improve coolant chemistry. The addition of hydrogen can increase the dose rate due to skyshine up to a factor of 10 times expected levels depending on injection rates and power levels (Reference 39). Increasing the hydrogen injection rate will increase the dose rates even further. (See Reference 102) The skyshine dose determined by Equation A-34 of Appendix A depends on the following factors:

- The distance of the dose recipient location from the turbine.
- The number of hours per year that the location is occupied by a dose recipient.
- The total energy [MWe-hr] generated by the nuclear power station with hydrogen addition.
- The total energy [MWe-hr] generated by the nuclear power station without hydrogen addition.

4.4.2 Onsite Radwaste and Rad Material Storage Facilities

Low level radioactive waste may be stored at any ComEd nuclear power station in the following types of storage facilities:

- Process Waste Storage Facilities
  - Interim Radwaste Storage Facility (IRSF) structure
  - Concrete vaults containing 48 radwaste liners (Also referred to as "48-pack";)
- DAW Storage Facilities
  - Dry Active Waste (DAW) facilities (may include Butler buildings/warehouses)
- Replaced Steam Generator Storage Facilities

In addition, Rad Material may be stored in facilities on site:

- Rad Material Storage Facilities
  - Contaminated tools and equipment in seavans and/or warehouses

Administrative controls are implemented by each station to ensure compliance to applicable regulations. The impact to the offsite dose will be evaluated on a case by case basis and added to the station annex of the ODCM when applicable. . In addition, a 10CFR50.59 analysis may be required for radwaste storage facilities.

4.5 TOTAL DOSE REQUIREMENTS

4.5.1 Total Effective Dose Equivalent Limits; 10CFR20 and 40CFR190

10CFR20 requires compliance to dose limits expressed as "Total Effective Dose Equivalent" (TEDE). The TEDE is the sum total of the external dose and the sum of the weighted internal doses. (See Appendix A; Sections A.4.3 and A.5.1)

4.5.2 Total Dose For Uranium Fuel Cycle

The nuclear power stations are required to determine the total dose to a member of the public due to all uranium fuel cycle sources in order to assess compliance with 40CFR190 as part of demonstrating compliance with 10CFR20.

The total dose for the uranium fuel cycle is the sum of doses due to radioactivity in airborne and liquid effluents and the doses due to direct radiation from contained sources at the nuclear power station. When evaluation of total dose is required for a station, the following contributions are summed:

- Doses due to airborne and liquid effluents from the station.
- Doses due to liquid effluents from nuclear power stations upstream.
- Doses due to nitrogen-16 (N^{16}) skyshine, if the station is a boiling water reactor.
- Doses due to any onsite radioactive waste storage facilities; if applicable.

Section A.5.2 of Appendix A discusses the details of evaluations.

Table 4-1

Radionuclide Types Considered For Airborne Effluent Exposure Pathways

Category	External Radiation		Internal Radiation	
	Plume	Ground	Inhalation	Ingestion
Noble Gases	X			
Tritium (H-3)			X	X
Carbon-14 (C-14)[a]		X	X	
Iodine[b]		X	X	X
Particulate[b]		X	X	X

[a] ComEd stations are not required to calculate dose due to C^{14}. (See ODCM Bases and Reference document, Reference 101; Section O.4.5)

[b] The nuclear power stations are not required to consider all iodine and particulate radionuclides. For details, see Generic Letter 89-01 and the RETS.

Table 4-2
Radiation Dose Factors

Name and Symbol	Units	Definition	Table
Gamma Air Dose Factor S_i, V_i, G_i	mrad/yr per µCi/sec	Gamma air dose rate per unit of radioactivity release rate for radionuclide i for a stack (S_i), vent (V_i), or ground level (G_i) release.	F-7 F-7a
Whole Body Dose Factor: $\bar{S}_i$, $\bar{V}_i$, $\bar{G}_i$	mrad/yr per µCi/sec	Whole body dose rate per unit of radioactivity release rate for radionuclide i for a stack ($\bar{S}_i$), vent ($\bar{V}_i$), or ground ($\bar{G}_i$) level release.	F-7 F-7a
Beta Air Dose Factor L_i	mrad/yr per µCi/m^3	Beta air dose rate per unit of radioactivity concentration for radionuclide i.	C-9
Beta Skin Dose Factor $\bar{L}_i$	mrem/yr per µCi/m^3	Beta skin dose rate per unit of radioactivity concentration for radionuclide i.	C-9
Ground Plane Dose Dose Conversion DFG_i	mrem/hr per pCi/m^2	Dose rate per unit of ground radioactivity concentration for radionuclide i.	C-10
Inhalation Dose Commitment Factor DFA_{ija}	mrem per pCi	Dose commitment to organ j of age group 'a' per unit of radioactivity inhaled for radionuclide i. (see Note 1)	RG 1.109 Tables; E-7, E-8, E-9, E-10
Ingestion Dose Commitment Factor DFI_{ija}	mrem per pCi	Dose commitment to organ j of age group a per unit of radioactivity ingested for radionuclide i. (see Note 1)	RG 1.109 Tables; E-11, E-12, E-13, E-14
Inhalation Dose Commitment Factor DFA_{ija}	Sv/Bq	Dose commitment to organ j of age group a per unit of radioactivity inhaled for radionuclide i (see Note 1).	FGR-11 Table 2.1
Ingestion Dose Commitment Factor DFI_{ija}	Sv/Bq	Dose commitment to organ j of age group a per unit of radioactivity ingested for radionuclide i (see Note 1).	FGR-11 Table 2.2

Table 4-2

Radiation Dose Factors (cont.)

Note 1: Dose assessments for 10CFR20 and 40CFR 190 compliance are made for an adult only using the dose commitment factors of Federal Guidance Report 11 (Reference 93). These are given in units of Sieverts per Becquerel. To convert these data to the conventional units of (mrem/pCi) the data must be multiplied by 3.7×10^3.

Dose assessments for 10CFR50 Appendix I are made using dose factors of Regulatory Guide 1.109 (Reference 6) for all age groups.

CHAPTER 5

MEASUREMENT

5.0 INTRODUCTION

Each nuclear station has three measurement programs associated with offsite dose assessment:

- Measurement of releases of radioactivity from the station.
- Measurement of meteorology at the station site.
- Measurement of levels of radiation and radioactivity in the environs surrounding the station.

5.1 EFFLUENT AND PROCESS MONITORING

Radioactivity in liquid and gaseous effluents is measured in order to provide data for calculating radiation doses and radioactivity concentrations in the environment of each nuclear power station. Measurement of effluent radioactivity is required by 10CFR20.1302 and 10CFR50. The RETS of each nuclear power station provide detailed requirements for instrumentation, sampling and analysis. Relevant Regulatory Guides are 1.21 (Reference 4) and 4.15 (Reference 13). Chapter 10 of the ODCM includes brief descriptions of effluent monitoring instruments at each nuclear power station. The RETS of each nuclear power station require submission to the NRC of reports of effluent radioactivity releases and environmental measurements.

5.2 METEOROLOGICAL MONITORING

Meteorological parameters are measured in the vicinity of each nuclear power station in order to provide data for calculating radiation doses due to airborne effluent radioactivity. Some nuclear power station's Technical Specifications state applicable requirements (typically under the subheading, "Meteorological Instrumentation," in the instrumentation section). Regulatory guidance is given in Regulatory Guide 1.23 (Reference 5). Wind speed, wind direction and the temperature gradient are measured using instruments at two or more elevations on a meteorological tower at each ComEd station. The elevations are chosen to provide meteorological data representative of the elevations of the airborne releases from the station. The Annual Radiological Environmental Operating Report includes a summary of meteorological data collected over the reporting year. These data are used to calculate optional isopleths of radiation dose and radioactivity concentration.

5.3 RADIOLOGICAL ENVIRONMENTAL MONITORING PROGRAM (REMP)

Each nuclear power station has a REMP that provides representative measurements of radiation and radioactive material in the environment. The program provides verification that measurable radiological impacts from the power station on the environment are within expectations derived from effluent measurements and calculations. The REMP is required by 10CFR50 (see Appendix I, Sections IV.B.2 and IV.B.3). General requirements of the program are prescribed in each station's RETS and more precise details (such as specific monitoring locations) are specified in ODCM Chapter 11.

5.3.1 Interlaboratory Comparison Program

The laboratory which performs the REMP analyses is required by the RETS to participate in an interlaboratory comparison program. The purpose is to provide an independent check on the laboratory's analytical procedures and to alert it to potential problems (e.g. accuracy). In order to assess the measurements of radioactivity in environmental media, an independent agency supplies participating laboratories with samples of environmental media containing unspecified amounts of radioactivity. The laboratories measure the radioactivity concentrations and report the results to the agency. At a later time, the agency informs the participating laboratories of the actual concentrations and associated

uncertainties. Any significant discrepancies are investigated by the participating laboratories. A similar process is used to assess measurements of environmental radiation by passive thermoluminescent dosimeters.

CHAPTER 6

IMPLEMENTATION OF OFFSITE DOSE ASSESSMENT PROGRAM

6.1 NUCLEAR POWER STATION

The nuclear power station staff is responsible for effluent monitoring. The staff determines effluent radioactivity concentration and flow rate. This data is used to determine the radioactivity release information required for the Radioactive Effluent Release Report and to perform monthly calculations and projections of offsite radiation dose.

The nuclear power station staff is also responsible for control of effluent radioactivity. Procedures are implemented for determining, calculating and implementing setpoints. Liquid and gaseous radwaste treatment systems and ventilation exhaust treatment systems are utilized when appropriate. The nuclear power station staff implements the Process Control Program (PCP) for solid radwaste and measures tank radioactivity and BWR off-gas radioactivity.

The nuclear power station staff maintains instrumentation associated with these activities and demonstrates operability of the instrumentation in accordance with the surveillance requirements of the RETS. In the event that any RETS requirements are violated, the nuclear power station staff is responsible for taking one of the actions allowed by the RETS and issuing any required reports to the NRC.

The nuclear power station staff assembles and distributes the Radioactive Effluent Release Report.

The nuclear power station staff and/or the Generation Support Radiation Protection Department (GSRPD) reviews the Annual Radiological Environmental Operating Report prepared by the REMP contractor. The nuclear power station staff distributes the report to the NRC.

6.2 METEOROLOGICAL CONTRACTOR

The meteorological contractor operates and maintains the meteorological tower instrumentation at each nuclear power station. The contractor collects and analyzes the data and issues periodic reports. The contractor prepares the meteorological data summary required for the Annual Radiological Environmental Operating Report (AREOR) and also computes and plots isopleths included in the AREOR.

6.3 REMP CONTRACTOR

The radiological environmental contractor collects environmental samples and performs radiological analyses as specified in the nuclear power station's REMP (see ODCM Chapters 11 and 12). The contractor issues reports of results to GSRPD and each nuclear station. The contractor participates in an interlaboratory comparison program and reports results in the Annual Radiological Environmental Operating Report. The contractor performs the annual land use census and assembles the Annual Radiological Environmental Operating Report.

6.4 CORPORATE DEPARTMENTS

The Generation Support Radiation Protection Department (GSRPD) administers the offsite dose assessment computer program. The department maintains the generic section of the ODCM. The department oversees the meteorological and REMP contractors through administration of the purchase orders and by receiving and reviewing periodic reports.

A computer support group develops and maintains the computer program used by the nuclear power stations for offsite dose calculation and projection. GSRPD performs validation and verification of the computer code

CHAPTER 7

REFERENCES

1. Deleted

2. U.S. Nuclear Regulatory Commission, Standard Radiological Effluent Technical Specifications for Pressurized Water Reactors, NUREG-0472, Rev. 3, Draft, January 1983 (frequently revised).

3. U.S. Nuclear Regulatory Commission, Standard Radiological Effluent Technical Specifications for Boiling Water Reactors, NUREG-0473, Rev. 3, Draft, September 1982 (frequently revised).

4. U.S, Nuclear Regulatory Commission, Measuring, Evaluating, and Reporting Radioactivity in Solid Wastes and Releases of Radioactive Materials in Liquid and Gaseous Effluents from Light-Water-Cooled Nuclear Power Plants, Regulatory Guide 1.21. Revision 1, June 1974.

5. U.S. Nuclear Regulatory Commission, Onsite Meteorological Programs, Regulatory Guide 1.23, Safety Guide 23, February 17, 1972.

6. U.S. Nuclear Regulatory Commission, Calculation of Annual Doses to Man from Routine Releases of Reactor Effluents for the Purpose of Evaluating Compliance with 10 CFR Part 50 Appendix I, Regulatory Guide 1.109, Rev. 1, October 1977.

7. U.S. Nuclear Regulatory Commission, Methods for Estimating Atmospheric Transport and Dispersion of Gaseous Effluents in Routine Releases from Light-Water-Cooled Reactors, Regulatory Guide 1.111, Rev. 1, July 1977.

8. U.S. Nuclear Regulatory Commission, Calculation of Releases of Radioactive Materials in Gaseous and Liquid Effluents from Light-Water-Cooled Power Reactors, Regulatory Guide 1.112, Rev. 0-R, April 1976; reissued May 1977.

9. U.S. Nuclear Regulatory Commission, Estimating Aquatic Dispersion of Effluents from Accidental and Routine Reactor Releases for the Purpose of Implementing Appendix I, Regulatory Guide 1.113, Rev. 1, April 1977.

10. U.S. Nuclear Regulatory Commission, Programs for Monitoring Radioactivity in the Environs of Nuclear Power Plants, Regulatory Guide 4.1, Rev. 1, April 1975.

11. U.S. Nuclear Regulatory Commission, Preparation of Environmental Reports for Nuclear Power Stations, Regulatory Guide 4.2, Rev. 2, July 1976.

12. U.S. Nuclear Regulatory Commission, Environmental Technical Specifications for Nuclear Power Plants, Regulatory Guide 4.8, Rev. 1, December 1975. (See also the related Radiological Assessment Branch Technical Position, Rev. 1, November 1979.)

13. U.S. Nuclear Regulatory Commission, Quality Assurance for Radiological Monitoring Programs (Normal Operations)--Effluent Streams and the Environment, Regulatory Guide 4.15, Rev. 1, February 1979.

14. U.S. Nuclear Regulatory Commission, Preparation of Radiological Effluent Technical Specifications for Nuclear Power Plants, edited by J. S. Boegli et al. NUREG-0133, October 1978.

15. U.S. Nuclear Regulatory Commission, XOQDOQ: Computer Program for the Meteorological Evaluation of Routine Effluent Releases at Nuclear Power Stations, J. F. Sagendorf et al. NUREG/CR-2919, PNL-4380, September 1982.

16. U.S. Nuclear Regulatory Commission, Radiological Assessment, edited by J. E. Till and H. R. Meyer, NUREG/CR-3332, ORNL-5968, September 1983.

17. U.S. Nuclear Regulatory Commission, Standard Review Plan, NUREG-0800, July 1981.

18. U.S. Atomic Energy Commission, Meteorology and Atomic Energy 1968, edited by D. H. Slade, TID-21940, July 1968.

19. U.S. Atomic Energy Commission, Plume Rise, G. A. Briggs, TID-25075, 1969.

20. U.S. Atomic Energy Commission, The Potential Radiological Implications of Nuclear Facilities in the Upper Mississippi River Basin in the Year 2000, WASH 1209, January 1973.

21. U.S. Atomic Energy Commission, HASL Procedures Manual, Health and Safety Laboratory, HASL-300 (revised annually).

22. U.S. Department of Energy, Models and Parameters for Environmental Radiological Assessments, edited by C. W. Miller, DOE/TIC-11468, 1984.

23. U.S. Department of Energy, Atmospheric Science and Power Production, edited by D. Randerson, DOE/TIC-27601, 1984.

24. U.S. Environmental Protection Agency, Workbook of Atmospheric Dispersion Estimates, D. B. Turner, Office of Air Programs Publication No. AP-26, 1970.

25. U.S. Environmental Protection Agency, 40CFR190 Environmental Radiation Protection Requirements for Normal Operations of Activities in the Uranium Fuel Cycle, Final Environmental Statement, EPA 520/4-76-016, November 1, 1976.

26. U.S. Environmental Protection Agency, Environmental Analysis of the Uranium Fuel Cycle, EPA-520/9-73-003-C, November 1973.

27. American Society of Mechanical Engineers, Recommended Guide for the Prediction of the Dispersion of Airborne Effluents, 1973.

28. Eisenbud, M., Environmental Radioactivity, 3rd Edition, (Academic Press, Orlando, FL, 1987).

29. Glasstone, S., and Jordan, W. H., Nuclear Power and Its Environmental Effects (American Nuclear Society, LaGrange Park, IL, 1980).

30. International Atomic Energy Agency, Generic Models and Parameters for Assessing the Environmental Transfer of Radionuclides from Routine Releases, Safety Series, No. 57, 1982.

31. National Council on Radiation Protection and Measurements, Radiological Assessment: Predicting the Transport, Bioaccumulation, and Uptake by Man of Radionuclides Released to the Environment, NCRP Report No. 76, March 15, 1984.

32. American National Standards Institute, Guide to Sampling Airborne Radioactive Materials in Nuclear Facilities, ANSI N13.1-1969, February 19, 1969.

33. Institute of Electrical and Electronics Engineers, Specification and Performance of On-Site Instrumentation for Continuously Monitoring Radioactivity in Effluents, ANSI N13.10-1974, September 19, 1974.

34. American National Standards Institute, Testing and Procedural Specifications for Thermoluminescence Dosimetry (Environmental Applications), ANSI N545-1975, August 20, 1975.

35. American Nuclear Insurers, Effluent Monitoring, ANI/MAELU Engineering Inspection Criteria for Nuclear Liability Insurance, Section 5.1, Rev. 2, October 24, 1986.

36. American Nuclear Insurers, Environmental Monitoring, ANI/MAELU Engineering Inspection Criteria for Nuclear Liability Insurance, Section 5.2, Rev. 1, March 23, 1987.

37. American Nuclear Insurers, Environmental Monitoring Programs, ANI/MAELU Information Bulletin 86-1, June 9, 1986.

38. Cember, H., Introduction to Health Physics, 2nd Edition (Pergamon Press, Elmsford, NY 1983).

39. Electric Power Research Institute, Guidelines for Permanent BWR Hydrogen Water Chemistry Installations--1987 Revision, EPRI NP-5283-SR-A, Special Report, September 1987.

40. Commonwealth Edison Company; Information Relevant to Keeping Levels of Radioactivity in Effluents to Unrestricted Areas As Low As Reasonably Achievable, LaSalle County Station, Units 1 and 2, June 4, 1976.

41. U.S. Nuclear Regulatory Commission, Branch Technical Position, Radiological Assessment Branch, Revision 1, November 1979. (This is a branch position on Regulatory Guide 4.8.)

42. Deleted

43. U.S. Nuclear Regulatory Commission, Calculation of Releases of Radioactive Materials in Gaseous and Liquid Effluents from Pressurized Water Reactors (PWR-GALE Code), NUREG-0017, April 1976.

44. U.S. Nuclear Regulatory Commission, Calculation of Releases of Radioactive Materials in Gaseous and Liquid Effluents from Boiling Water Reactors (BWR-GALE Code), NUREG-0016, April 1976.

45. Sargent & Lundy, N-16 Skyshine from BWR Turbine Systems and Piping, NSLD Calculation No. D2-2-85, Rev. 0, 2/1/85.

46. Sargent & Lundy Calculation ATD-0138, Rev. 0, N-16 Skyshine Ground Level Dose from Dresden Turbine Systems and Piping, July 14, 1992.

47. Sargent & Lundy Calculation ATD-0139, Rev. 0, N-16 Skyshine Ground Level Dose from LaSalle Turbine Systems and Piping, July 28, 1992.

48. Sargent & Lundy Calculation ATD-0140, Rev. 0, N-16 Skyshine Ground Level Dose from Quad Cities Turbine Systems and Piping, July 28, 1992.

49. U.S. Nuclear Regulatory Commission, Methods for Demonstrating LWR Compliance with the EPA Uranium Fuel Cycle Standard (40 CFR Part 190), NUREG-0543, February 1980.

50. International Commission on Radiological Protection, Report of Committee Two on Permissible Dose for Internal Radiation, Recommendations of the International Commission on Radiological Protection, ICRP Publication 2, 1959.

51. U.S. Nuclear Regulatory Commission, Age-Specific Radiation Dose Commitment Factors for a One-Year Chronic Intake, Battelle Pacific Northwest Laboratories, NUREG-0172, 1977.

52. W. C. Ng, Transfer Coefficients for Prediction of the Dose to Man via the Forage-Cow-Milk Pathway from Radionuclides Released to the Biosphere, UCRL-51939.

53. E. C. Eimutis and M. G. Konicek, Derivations of Continuous Functions for the Lateral and Vertical Atmospheric Dispersion Coefficients, Atmospheric Environment 6, 859 (1972).

54. D. C. Kocher, Editor, Nuclear Decay Data for Radionuclides Occurring in Routine Releases from Nuclear Fuel Cycle Facilities, ORNL/NUREG/TM-102, August 1977.

55. R. L. Heath, Gamma-Ray Spectrum Catalog, Aerojet Nuclear Co., ANCR-1000-2, third or subsequent edition.

56. S. E. Thompson, Concentration Factors of Chemical Elements in Edible Aquatic Organisms, UCRL-50564, Rev. 1, 1972.

57. U.S. Nuclear Regulatory Commission, Instruction Concerning Risks from Occupational Radiation Exposure, Regulatory Guide 8.29, July 1981.

58. Dresden Nuclear Power Station, Radioactive Waste and Environmental Monitoring, Annual Report 1987, March 1988.

59. Reserved reference number

60. Sargent & Lundy Calculation ATD-0173, Rev. 0, 9/21/92, Annual Dose to Members of the Public Due to the LaSalle IRSF.

61. Sargent & Lundy Calculation ATD-0174, Rev. 0, 9/21/92, Annual Dose to Members of the Public Due to the Zion IRSF.

62. Sargent & Lundy Calculation ATD-0175, Rev. 0, 9/21/92, Annual Dose to Members of the Public Due to the Quad Cities IRSF.

63. Sargent & Lundy Calculation ATD-0176, Rev. 0, 9/21/92, Annual Dose to Members of the Public Due to the Dresden IRSF.

64. Reserved reference number

65. Sargent & Lundy Calculation ATD-0180, Rev. 0, 9/25/92, Dose Information Around Braidwood DAW Sea/Land Van Storage Area.

66. Sargent & Lundy Calculation ATD-0181, Rev. 0, 9/25/92, Dose Information Around Byron DAW Sea/Land Van Storage Area.

67. Sargent & Lundy Calculation ATD-0182, Rev. 0, 9/25/92, Dose Information Around Dresden DAW Sea/Land Van Storage Area.

68. Sargent & Lundy Calculation ATD-0183, Rev. 0, 9/25/92, Dose Information Around LaSalle DAW Sea/Land Van Storage Area.

69. Catalytic, Inc., Determination of Roof and Wall Shielding for Onsite and Offsite Radiation Protection from Skyshine, Calculation Index Number 70161-19, August 22, 1984 (applies to Dresden).

70. D. C. Kocher, Radioactivity Decay Data Tables, DOE/TIC-11026, 1981.

71. J. C. Courtney, A Handbook of Radiation Shielding Data, ANS/SD-76/14, July 1976.

72. Commonwealth Edison Company, Information Relevant to Keeping Levels of Radioactivity in Effluents to Unrestricted Areas As Low As Reasonably Achievable, Zion Station, Units 1 and 2, June 4, 1976.

73. Commonwealth Edison Company, Information Relevant to Keeping Levels of Radioactivity in Effluents to Unrestricted Areas As Low As Reasonably Achievable, Dresden Station, Units 2 and 3, June 4, 1976.

74. Commonwealth Edison Company, Information Relevant to Keeping Levels of Radioactivity in Effluents to Unrestricted Areas As Low As Reasonably Achievable, Quad Cities Station, Units 1 and 2, June 4, 1976.

75. Sargent & Lundy, METWRSUM, S&L Program Number 09.5.187-1.0.

76. Sargent & Lundy, Comments on CECo ODCM and List of S&L Calculations, Internal Office Memorandum, P. N. Derezotes to G. R. Davidson, November 23, 1988.

77. Sargent & Lundy, AZAP, A Computer Program to Calculate Annual Average Offsite Doses from Routine Releases of Radionuclides in Gaseous Effluents and Postaccident X/Q Values, S&L Program Number 09.8.054-1.7.

78. National Oceanic and Atmospheric Administration, A Program for Evaluating Atmospheric Dispersion from a Nuclear Power Station, J. F. Sagendorf, NOAA Technical Memorandum ERL ARL-42, Air Resources Laboratory, Idaho Falls, Idaho, May 1974.

79. G. P. Lahti, R. S. Hubner, and J. C. Golden, Assessment of Gamma-Ray Exposures Due to Finite Plumes, Health Physics 41, 319 (1981).

80. National Council of Radiation Protection and Measurements, Ionizing Radiation Exposure of the Population of the United States, NCRP Report No. 93, September 1, 1987.

81. Reserved reference number

82. W. R. Van Pelt (Environmental Analysts, Inc.), Letter to J. Golden (ComEd) dated January 3, 1972.

83. Electric Power Research Institute, Radiological Effects of Hydrogen Water Chemistry, EPRI NP-4011, May 1985.

84. U.S. Nuclear Regulatory Commission, Draft Generic Environmental Impact Statement on Uranium Milling, NUREG-0511, April 1979.

85. U.S. Environmental Protection Agency, Environmental Analysis of the Uranium Fuel Cycle, Part I - Fuel Supply, EPA-520/9-73-003-B, October 1973.

86. U.S. Nuclear Regulatory Commission, Final Generic Environmental Statement on the Use of Recycle Plutonium in Mixed Oxide Fuel in Light Water Cooled Reactors, NUREG-0002, August 1976.

87. U.S. Nuclear Regulatory Commission, Demographic Statistics Pertaining to Nuclear Power Reactor Sites, NUREG-0348, Draft, December 1977.

88. Nuclear News 31, Number 10, Page 69 (August 1988).

89. General Electric Company, Irradiated Fuel Storage at Morris Operation, Operating Experience Report, January 1972 through December 1982, K. J. Eger, NEDO-20969B.

90. U.S. Nuclear Regulatory Commission, Generic Letter 89-01, "Guidance For The Implementation of Programmatic Controls For RETS In The Administrative Controls Section of Technical Specifications and the Relocation of Procedural Details of Current RETS to the Offsite Dose Calculation Manual or Process Control Program", January 1989.

91. "Assessment of the Impact of Liquid Radioactive Effluents from Braidwood Station on Proposed Public Water Intakes at Wilmington, Illinois", J.C. Golden, NSEP, January 1990

92. NRC Safety Evaluation Report (SER)/Idaho Notional Engineering Laboratory Technical Evaluation Report (TER) of the Commonwealth Edison Offsite Dose Calculation Manual (ODCM), Revision O.A, December 2, 1991.

93. K. F. Eckerman, et al, Limiting Values of Radionuclide Intake and Air Concentration and Dose Conversions Factors for Inhalation, Submersion and Inhalation, Federal Guidance Report No. 11, U.S. Environmental Protection Agency Report EPA-520/1-88-020, September 1988.

94. Deleted.

95. U.S. Nuclear Regulatory Commission, Standards for Protection Against Radiation (10CFR20).

96. U.S. Nuclear Regulatory Commission, Licensing of Production and Utilization Facilities (10CFR50).

97. Federal Register, Vol. 57, No. 169, Monday, August 31, 1992, page 39358.

98. Miller, Charles W., Models and Parameters for Environmental Radiological Assessments, U.S. Dept. of Energy, DE8102754, 1984, pages 32, 33, 48, and 49.

99. Kocher, D. C., "Dose-Rate Conversion Factors For External Exposure To Photons and Electrons", Health Physics Vol. 45, No. 3 (September), pp. 665-686, 1983.

100. U.S. Department of Health, Education and Welfare Public Health Service, Radiological Health Handbook, January 1970.

101. ODCM Bases and Reference Document, rev.0, November, 1998.

102. G. Moran, D. Goff, Quad Cities Nuclear Power Station; 1993 Hydrogen Water Chemistry Stress Corrosion Monitoring Test - Unit 2, 9/17-23/93.

103. U.S. Nuclear Regulatory Commission, Generic Letter 79-041, September 17, 1979.

APPENDIX A

COMPLIANCE METHODOLOGY

TABLE OF CONTENTS

		PAGE
A.0	INTRODUCTION	A-1
A.1	AIRBORNE RELEASES	A-1
1.	Release Point Classifications	A-1
2.	Dose Due to Noble Gas Radionuclides	A-2
1.	Gamma Air Dose	A-2
2.	Beta Air Dose	A-3
3.	Total Body Dose	A-4
4.	Skin Dose	A-5
3.	Dose Rate Due to Noble Gas Radionuclides	A-6
1.	Whole Body Dose Rate	A-6
2.	Skin Dose Rate	A-6
4.	Dose Due to Non-Noble Gas Radionuclides	A-7
1.	Ground Deposition	A-8
2.	Inhalation	A-8
3.	Food Pathways	A-10
1.	Vegetation	A-11
2.	Milk	A-12
3.	Meat	A-15
5.	Dose Rate Due to Non-Noble Gas Radionuclides	A-15
6.	Operability and Use of Gaseous Effluent Treatment Systems	A-16
A.2	LIQUID RELEASES	A-17
1.	Dose	A-17
2.	Liquid Effluent Concentrations Requirement	A-19
3.	Tank Discharges	A-20
4.	Tank Overflow	A-21
5.	Operability and Use of the Liquid Radwaste Treatment System	A-21
6.	Drinking Water	A-21
7.	Non-routine Liquid Release Pathways	A-21
A.3	DOSE DUE TO CONTAINED SOURCES	A-21
1.	BWR Skyshine	A-22
2.	Dose from Onsite Radwaste Storage Facilities	A-23
A.4	TOTAL DOSE LIMITS	A-24
1.	Deep Dose Equivalent	A-24
2.	Committed Effective Dose Equivalent	A-24
3.	Total Effective Dose Equivalent	A-25

APPENDIX A
TABLE OF CONTENTS (Cont'd)

		PAGE
A.5	COMPLIANCE TO TOTAL DOSE LIMITS	A-26
1.	Total Effective Dose Equivalent Limit - 10CFR20 Compliance	A-26
2.	Total Dose Due to the Uranium Fuel Cycle (40CFR190)	A-26
3.	Summary of Compliance Methodology .	A-27
A.6	DOSE DUE TO DRINKING WATER (40CFR141)	A-27
1.	40CFR141 Restrictions on Manmade Radionuclides	A-27
2.	Application	A-28

LIST OF TABLES

NUMBER	TITLE	PAGE
A-0	Average Annual Concentrations Assumed to Produce a Total Body or Organ Dose of 4 mrem/yr.	A-28
A-1	Compliance Matrix	A-29
A-2	Release Point Classifications	A-30
A-3	Nearest Downstream Community Water Systems	A-31
A-4	40CFR190 Compliance	A-32

APPENDIX A

COMPLIANCE METHODOLOGY

A.0 INTRODUCTION

This appendix reviews the offsite radiological limits applicable to the nuclear power stations and presents in detail the equations and procedures used to assess compliance with these limits. An introduction to the calculational approach used here is given in Chapter 4. The approach incorporates simplifications such as the following:

- Use of pre-calculated atmospheric transport parameters based on historical average atmospheric conditions (see Section 4.1.5). These factors, X/Q and D/Q, are defined in Chapter 4.
- Use of pre-calculated dose factors based on historical average atmospheric conditions. For example, a dose factor with units (mrad/yr) per (μCi/sec) is used to obtain gamma dose rate in mrad/yr from noble gas release rate in μCi/sec.

Values of these parameters are obtained as described in Appendix B.

The equations and parameters of this appendix are for use in calculating offsite radiation doses during routine operating conditions. They are not for use in calculating doses due to non-routine releases (e.g., accident releases).

The applicable radiation protection regulations included in 10CFR20, 10CFR50 Appendix I, and 40CFR190 each require a different type of radiological dose assessment. In some cases, e.g. ingestion and inhalation pathways, the calculations used to demonstrate compliance may be similar, but the reference dose conversion factors differ because of historical regulatory evolution. This section of the ODCM develops, in detail, the evaluation used to determine the individual components of the total dose, and then indicates which are reportable and in some cases combined to demonstrate regulatory compliance.

An overview of the required compliance is given in Tables 2-1, 2-2, and 2-3. In Table 2-1, the dose components are itemized and referenced, and an indication of their regulatory application is noted. A more detailed compliance matrix is given in Table 2-3. Additionally, the locations of dose receivers for each dose component are given in Table 2-2.

The following sections detail the required radiological dose calculations.

A.1 AIRBORNE RELEASES

A.1.1 Release Point Classifications

The pattern of dispersion of airborne releases is dependent on the height of the release point relative to adjacent structures. For the equations of this appendix, each release point is classified as one of the following three height-dependent types, which are defined in Section 4.1.4:

- Stack (or Elevated) Release Point (denoted by the letter S or subscript s)
- Ground Level Release Point (denoted by the letter G or subscript g)
- Vent (or Mixed Mode) Release Point (denoted by the letter V or subscript v)

The release point classifications of routine release points at the nuclear power stations are stated in Table A-2.

A.1.2 Dose Due to Noble Gas Radionuclides

A.1.2.1 Gamma Air Dose

Requirement

RETS limit the gamma air dose due to noble gas effluents released from each reactor unit to areas at and beyond the unrestricted area boundary to the following:

- Less than or equal to 5 mrad per calendar quarter.
- Less than or equal to 10 mrad per calendar year.

Equation

The gamma air dose due to noble gases released in gaseous effluents is calculated by the following expression:

$$D_\gamma = (3.17E\text{-}8)\Sigma\{ S_i A_{ia} + V_i A_{iv} + G_i A_{ig} \} \qquad \text{(A-1)}$$

The summation is over noble gas radionuclides i.

D_γ	Gamma Air Dose Dose to air due to gamma radiation from noble gas radionuclides released in gaseous effluents.	[mrad]
3.17E-8	Conversion Constant (seconds to years)	[yr/sec]
S_i, V_i, G_i	Gamma Air Dose Factor Gamma air dose rate at a specified location per unit of radioactivity release rate for radionuclide 'i' released from a stack, vent, or ground level release point, respectively. See Section 4.2.1, Section B.5 of Appendix B, and Table F-7 of Appendix F.	[(mrad/yr)/(μCi/sec)]
A_{ia}, A_{iv}, A_{ig}	Cumulative Radionuclide Release Measured cumulative release of radionuclide 'i' over the time period of interest from a stack, vent, or ground level release point.	[μCi]

Application

RETS require determination of cumulative and projected gamma air dose contributions due to noble gases for the current calendar quarter and the current calendar year at least once per 31 days (see Sections 12.4 of each station's RETS or Technical Specifications).

The dose factors in Table F-7 of Appendix F are used for the determinations required by these specifications. These values were calculated for the unrestricted area boundary in each sector and are judged to be very good approximations to the maximum offsite values. After doses for all sectors are determined, the highest dose is compared with the RETS limit on gamma air dose.

For a release attributable to a processing or effluent system shared by more than one reactor unit, the dose due to an individual unit is obtained by proportioning the effluents among the units sharing the system. The allocation procedure is specified in ODCM Chapter 10.

A.1.2.2 Beta Air Dose

Requirement
RETS limit the beta air dose due to noble gases in gaseous effluents released from each reactor unit to areas at and beyond the unrestricted area boundary to the following:

- Less than or equal to 10 mrad per calendar quarter.
- Less than or equal to 20 mrad per calendar year.

Equation
The beta air dose due to noble gases released in gaseous effluents is calculated by the following expression:

$$D_\beta = (3.17E\text{-}8)\Sigma\{ L_i[(X/Q)_s A'_{is} + (X/Q)_v A'_{iv} + (X/Q)_g A'_{ig}] \} \quad \text{(A-2)}$$

The summation is over noble gas radionuclides **'i'**.

D_β	Beta Dose Dose to air due to beta radiation from noble gas radionuclides released in gaseous effluents.	[mrad]
3.17E-8	Conversion Constant (seconds to years)	[yr/sec]
L_i	Beta Air Dose Factor Beta air dose rate per unit of radioactivity concentration for radionuclide **'i'**. See Section 4.2.2, Section B.7 of Appendix B, and Table C-9 of Appendix C.	[(mrad/yr)/(μCi/m³)]
$(X/Q)_s$ $(X/Q)_v$ $(X/Q)_g$	Relative Concentration Factor Radioactivity concentration at a specified location per unit of radioactivity release rate for a stack, vent, or ground level release . See Section 4.1.6, Section B.3 of Appendix B, and Table F-5 of Appendix F.	[sec/m³]
A'_{is} A'_{iv} A'_{ig}	Cumulative Radionuclide Release, Adjusted for Radiodecay Measured cumulative release of radionuclide **'i'** over the time period of interest from a stack, vent, or ground level release point, reduced to account for radiodecay in transit from the release point to the dose point:	[μCi]

$$A'_{is} = A_{is} \exp(-\lambda_i R/3600 u_s) \quad \text{(A-3)}$$

$$A'_{iv} = A_{iv} \exp(-\lambda_i R/3600 u_v) \quad \text{(A-4)}$$

$$A'_{ig} = A_{ig} \exp(-\lambda_i R/3600 u_g) \quad \text{(A-5)}$$

A_{is} A_{iv} A_{ig}	Cumulative Radionuclide Release Defined in Section A.1.2.1.	[μCi]
λ_i	Radiological Decay Constant Radiological decay constant for radionuclide **'i'**. See	[hr⁻¹]

Table C-7 of Appendix C.

R	Downwind Range Distance from the release point to the dose point. See Tables F-5, F-6, and F-7.	[m]
3600	Conversion Constant Converts hours to seconds.	[sec/hr]
u_s u_v u_g	Average Wind Speed Average wind speed for a stack, vent, or ground level release. See Section B.1.3 of Appendix B and Table F-4 of Appendix F.	[m/sec]

Application
RETS require determination of cumulative and projected beta air dose contributions due to noble gases for the current calendar quarter and the current calendar year at least once per 31 days (see Section 12.4 of each station's RETS or Technical Specification).

Beta air dose is determined for each sector using the highest calculated offsite value of X/Q for that sector. This value and the distance R to which it pertains are provided in Table F-5 of Appendix F. The highest dose is compared with the limit on beta air dose.

For a release attributable to a processing or effluent system shared by more than one reactor unit, the dose due to an individual unit is obtained by proportioning the effluents among the units sharing the system. The allocation procedure is specified in ODCM Chapter 10.

A.1.2.3 Total Body Dose

Requirement
The whole body dose, also called the deep dose equivalent (DDE), to any receiver is due, in part, to gamma radiation emitted from radioactivity in airborne effluents. This component is added to others to demonstrate compliance to the requirements of 40CFR190 and 10CFR20.

Equation

The whole body dose/DDE component due to gamma radiation from noble gases released in gaseous effluents is calculated by the following expression:

$$D_{wb} = (0.7)(1.11)(3.17E\text{-}8) \times \Sigma\{\bar{S}_i A_{is} + \bar{V}_i A_{iv} + \bar{G}_i A_{ig}\} \qquad \text{(A-6)}$$

The summation is over noble gas radionuclides 'i'.

D_{wb}	Whole Body Dose [mrem] Dose to the whole body due to gamma radiation from noble gas radionuclides released in gaseous effluents.	
0.7	Shielding Factor; a dimensionless factor that accounts for shielding due to the occupancy of structures.	
1.11	Conversion Constant (rads in air to rem in tissue)	[mrem/mrad]
3.17E-8	Conversion Constant (seconds to years)	[yr/sec]

$\bar{S}_i, \bar{V}_i, \bar{G}_i$	Gamma Whole Body Dose Factor Gamma whole body dose rate at a specified location per unit of radioactivity release rate for radionuclide 'i' released from a stack, vent, or ground level release point. The attenuation of gamma radiation due to passage through 1 cm of body tissue of 1 g/cm^3 density is taken into account in calculating this quantity. See Section 4.2.3, Section B.6 of Appendix B, and Table F-7 of Appendix F.	[(mrad/yr)/ (μCi/sec)]
A_{is}, A_{iv}, A_{ig}	Cumulative Radionuclide Release Defined in Section A.1.2.1.	[μCi]

Application

The whole body dose (deep dose equivalent) is included in the 40CFR190 and 10CFR20 compliance assessments. In some cases, the whole body dose may be required in 10CFR50 Appendix I assessments (See Table 2-1).

A.1.2.4 Skin Dose

Requirement
There is no regulatory requirement to evaluate skin dose, also referred to as the shallow dose equivalent (SDE). However, this component is evaluated for reference as there is skin dose design objective contained in 10CFR50 Appendix I. Note that in the unlikely event that if beta air dose guideline is exceeded, then the skin dose will require evaluation.

Equation
The part of skin dose due to noble gases released in gaseous effluents is calculated by the following expression:

$$D_s = (3.17E\text{-}8)\Sigma\{\bar{L}_i [(X/Q)_s A'_{is} + (X/Q)_v A'_{iv} + (X/Q)_g A'_{ig}] \quad \text{(A-7)}$$

$$+ (0.7)(1.11)[S_i A_{is} + V_i A_{iv} + G_i A_{ig}]\}$$

The summation is over noble gas radionuclides 'i'.

D_s	Skin Dose Dose to the skin due to beta and gamma radiation from noble gas radionuclides released in gaseous effluents.	[mrem]
$\bar{L}_i$	Beta Skin Dose Factor Beta skin dose rate per unit of radioactivity concentration for radionuclide 'i'. Attenuation of beta radiation passing through 7 mg/cm^2 of dead skin is accounted for. See Section 4.2.4, Section B.7 of Appendix B, and Table C-9 of Appendix C.	[(mrem/yr)/ (μCi/m^3)]

The remaining parameters are defined in Sections A.1.2.1 and A.1.2.2.

Application

The skin dose is calculated for reference only.

A.1.3 Dose Rate Due to Noble Gas Radionuclides

A.1.3.1 Whole Body Dose Rate

Requirement
RETS limit the whole body dose rate (deep dose equivalent rate) due to noble gases in gaseous effluents released from a site to areas at and beyond the site boundary to less than or equal to a dose rate of 500 mrem/yr at all times. (see Section 12.4 of each station's RETS and Technical Specifications)

Equation
The whole body dose rate (deep dose equivalent rate) due to noble gases released in gaseous effluents is calculated by the following expression:

$$\dot{D}_{wb} = (1.11)\Sigma\{\bar{S}_i Q_{is} + \bar{V}_i Q_{iv} + \bar{G}_i Q_{ig}\} \qquad \text{(A-8)}$$

The summation is over noble gas radionuclides 'i'.

$\dot{D}_{wb}$	Whole Body Dose Rate Dose rate to the whole body due to gamma radiation from noble gas radionuclides released in gaseous effluents.	[mrem/yr]
Q_{is}, Q_{iv}, Q_{ig}	Release Rate Measured release rate of radionuclide 'i' from a stack, vent, or ground level release point.	[µCi/sec]

The remaining parameters have the same definitions as used in the equation for whole body dose in Section A.1.2.3.

Application
RETS require the dose rate due to noble gases in gaseous effluents be determined to be within the above limit in accordance with methodology specified in the ODCM (see Section 12.4 of each station's RETS and Technical Specifications).

To comply with this specification, each station uses an effluent radiation monitor setpoint corresponding to an offsite whole body dose rate at or below the limit (see Chapter 10). In addition, each station assesses compliance by calculating offsite whole body dose rate on the basis of periodic samples obtained in accordance with station procedures.

A.1.3.2 Skin Dose Rate

Requirement
RETS limit the skin dose rate due to noble gases in gaseous effluents released from a site to areas at and beyond the site boundary to less than or equal to a dose rate of 3000 mrem/yr at all times. (See Section 12.4 of each station's RETS and/or Technical Specifications)

Equation
The skin dose rate (shallow dose equivalent rate) due to noble gases released in gaseous effluents is calculated by the following expression:

$$\dot{D}_s = \Sigma\{ L_i[(X/Q)_s Q'_{is} + (X/Q)_v Q'_{iv} + (X/Q)_g Q'_{ig}] + (1.11)[S_i Q_{is} + V_i Q_{iv} + G_i Q_{ig}] \} \qquad \text{(A-9)}$$

The summation is over noble gas radionuclides i.

D_s	Skin Dose Rate	[mrem/yr]
	Dose rate to skin due to beta and gamma radiation from noble gas radionuclides released in gaseous effluents.	
Q'_{is} Q'_{iv} Q'_{ig}	Release Rate, Adjusted for Radiodecay	[µCi/sec]
	Measured release rate of radionuclide 'i' from a stack, vent, or ground level release point, reduced to account for radiodecay in transit from the release point to the dose point:	
	$Q'_{is} = Q_{is} \exp(-\lambda_i R/3600u_s)$	(A-10)
	$Q'_{iv} = Q_{iv} \exp(-\lambda_i R/3600u_v)$	(A-11)
	$Q'_{ig} = Q_{ig} \exp(-\lambda_i R/3600u_g)$	(A-12)
	The parameters Q_{is}, Q_{iv}, and Q_{ig} are defined in Section A.1.3.1, and the parameters λ_i, R, u_s, u_v, and u_g are defined in Section A.1.2.2.	

The remaining parameters have the same definitions as used in the equation for skin dose in Section A.1.2.4.

Application
RETS require the dose rate due to noble gases in gaseous effluents to be determined to be within the above limit in accordance with methodology specified in the ODCM. (See Section 12.4 of each station's RETS and Technical Specifications.

To comply with this specification, each station uses an effluent radiation monitor setpoint corresponding to an offsite skin dose rate at or below the limit (see Chapter 10). In addition, each station assesses compliance by calculating offsite skin dose rate on the basis of samples obtained periodically in accordance with station procedures.

A.1.4 Dose Due to Non-Noble Gas Radionuclides

Requirement
RETS provide the following limits, based on 10CFR50 Appendix I, on the dose to a member of the public from specified non-noble gas radionuclides in gaseous effluents released from each reactor unit to areas at and beyond the unrestricted area boundary:

- Less than or equal to 7.5 mrem to any organ during any calendar quarter.
- Less than or equal to 15 mrem to any organ during any calendar year.

The individual dose components are also required as part of the 40CFR190 assessments and combined as part of the 10CFR20 assessment (See Section A.4). The deep dose due to radionuclides deposited on the ground is considered to be a component of the deep dose equivalent for 10CFR20 and 40CFR190 compliance and an organ (whole body) dose component for 10CFR50 Appendix I compliance.

Note that as a result of historical regulation evolution, committed dose equivalent (CDE) assessments for 10CFR20 and 40CFR190 compliance are made for an adult using Federal Guidance Report No. 11 (Reference 93) dose conversion factors; assessments for 10CFR50 Appendix I compliance are made for 4 age groups (adult/teenager/child/infant) using Regulatory Guide 1.109 (Reference 6) dose conversion factors.

Equation

The committed dose equivalent (CDE) is calculated for releases in the time period under consideration.

Specifically, the CDE is calculated as the sum of two contributions:

$$D^{NNG}_{ja} = D^{inhal}_{ja} + D^{food}_{ja} \quad \text{(A-13)}$$

D^{NNG}_{ja}	Committed Dose Equivalent (CDE) Due to Non-Noble Gas Radionuclides Sum of the committed dose equivalents to organ j of an individual of age group a due to non-noble gas radionuclides released in gaseous effluents during a specified time period.	[mrem]
D^{inhal}_{ja}	Inhalation Committed Dose Equivalent (CDE) CDE to organ j of an individual of age group a due to inhalation of non-noble gas radionuclides released in gaseous effluents. See Equation A-17 in Section A.1.4.2.	[mrem]
D^{food}_{ja}	Food Pathways Committed Dose Equivalent (CDE) CDE due to ingestion via food pathways (leafy vegetables, produce, milk, and meat) of non-noble gas radionuclides released in gaseous effluents. See Equation A-18 in Section A.1.4.3.	[mrem]

Application

RETS require cumulative and projected dose contributions for the current calendar quarter and the current calendar year for the specified non-noble gas radionuclides in airborne effluents to be determined at least once per 31 days (see Section 12.4 of each station's RETS and Technical Specifications).

To comply with this specification, each nuclear power station obtains and analyzes samples in accordance with the radioactive gaseous waste or gaseous effluent sampling and analysis program in its RETS. For each organ of each age group considered (adult/teenager/child/infant), the dose for each pathway is calculated in every sector (except for sectors over water bodies). The calculation is based on the location assumptions discussed below in conjunction with the pathway equations. For each organ of each age group, the doses are summed in each sector over all pathways. The result for the sector with the highest total dose is compared to the limit.

For a release attributable to a processing or effluent system shared by more than one reactor, the dose due to an individual unit is obtained by proportioning the effluents among the units sharing the system. The allocation procedure is specified in ODCM Chapter 10.

The CDE evaluated for an adult is also included as part of the 10CFR20 and 40CFR190 assessment (See Section A.4).

A.1.4.1 Ground Deposition

The dose due to ground deposition of radioactivity is considered to be a whole body dose (deep dose equivalent) component and is calculated by the following expressions:

$$D^{gnd} = (24)(0.7)t_s\Sigma\{ DFG_i C^G_i \} \quad \text{(A-14)}$$

$$C^G_i = (d_i/\lambda_i)[1 - \exp(-\lambda_i t_b)] \quad \text{(A-15)}$$

$$d_i = [(1E6)/(24t_r)] \times [A'_{is}(D/Q)_s + A'_{iv}(D/Q)_v + A'_{ig}(D/Q)_g] \quad \text{(A-16)}$$

The summation is over non-noble gas radionuclides 'i'.

D^{gnd}	Ground Deposition Deep Dose Equivalent (DDE) DDE due to ground deposition of non-noble gas radionuclides released in gaseous effluents.	[mrem]
24	Conversion Constant (days to hours)	[hr/day]
0.7	Shielding Factor; a dimensionless factor which accounts for shielding due to occupancy of structures.	
t_r	Release or Exposure Period Time period of the calculation (e.g., number of days in the quarter for a calendar quarter calculation).	[days]
DFG_i	Ground Plane Dose Conversion Factor Dose rate to the whole body per unit of ground radioactivity concentration due to standing on ground uniformly contaminated with radionuclide 'i'. See Table C-10 of Appendix C.	[(mrem/hr)/(pCi/m²)]
C^G_i	Ground Plane Concentration Concentration of radionuclide 'i' on the ground.	[pCi/m²]
d_i	Deposition Rate Rate at which radionuclide 'i' is deposited onto the ground.	[(pCi/hr)/m²]
λ_i	Radiological Decay Constant Radiological decay constant for radionuclide 'i'. See Table C-7 of Appendix C.	[hr⁻¹]
t_b	Time Period of Ground Deposition Time period during which the radioactivity on the ground is assumed to have been deposited. See Table C-1 of Appendix C.	[hr]
1E6	Conversion Constant (μCi to pCi)	[pCi/μCi]
A'_{is} A'_{iv} A'_{ig}	Cumulative Radionuclide Release, Adjusted for Radiodecay Measured cumulative release of radionuclide 'i' from a stack, vent, or ground level release point, reduced to account for radiodecay in transit from the release point to the dose point. See Section A.1.2.2.	[μCi]
$(D/Q)_s$	Relative Deposition Factor	[m⁻²]

$(D/Q)_v$
$(D/Q)_g$ Rate of deposition of radioactivity at a specified location per unit of radioactivity release rate for a stack, vent, or ground level release. See Section 4.1.7, Section B.4 of Appendix B, and Table F-5 of Appendix F.

Application
The deep dose equivalent (DDE) due to ground deposition is determined for each sector using the highest calculated offsite value of D/Q for that sector. This value and the distance R to which it pertains are provided in Table F-5 of Appendix F. This dose component is included in the calculation of the total DDE (see equation A-35).

A.1.4.2 Inhalation

The committed dose equivalent (CDE) due to inhalation is calculated by the following expression:

$$D^{inhal}_{ja} = (3.17E\text{-}8)(1E6)(R_a) \times \Sigma\{ DFA_{ija}[(X/Q)_s A'_{is} + (X/Q)_v A'_{iv} + (X/Q)_g A'_{ig}] \} \quad \text{(A-17)}$$

The summation is over non-noble gas radionuclides 'i'.

D^{inhal}_{ja}	Inhalation Committed Dose Equivalent (CDE) CDE to organ j of an individual in age group a due to inhalation of non-noble gas radionuclides released in gaseous effluents.	[mrem]
3.17E-8	Conversion Constant (seconds to years)	[yrs/sec]
1E6	Conversion Constant (μCi to pCi)	[pCi/μCi]
R_a	Individual Air Inhalation Rate The air intake rate for individuals in age group 'a'. See Table C-2 of Appendix C.	[m^3/yr]
DFA_{ija}	Inhalation Dose Commitment Factor Dose commitment to organ 'j' of an individual in age group 'a' per unit of activity of radionuclide 'i' inhaled.	[mrem/pCi]

Assessment	Dose Factor	Age Group
10CFR50 App.I	Reg. Guide 1.109 Tables E-7 through E-10	All (four)
10CFR20/40CFR190	Federal Guidance Report-11; Table 2.1	Adult only (average individual)

$(X/Q)_a$ $(X/Q)_v$ $(X/Q)_g$	Relative Effluent Concentration Radioactivity concentration at a specified location per unit of radioactivity release rate. See Section 4.1.6, Section B.3 of Appendix B, and Table F-5 of Appendix F.	[sec/m^3]
$A'_{is}, A'_{iv}, A'_{ig}$	Cumulative Radionuclide Release, Adjusted for Radiodecay	[μCi]

Measured cumulative release of radionuclide 'i' from a stack, vent, or ground level release point, reduced to account for radiodecay in transit from the release point to the dose point. See Section A.1.2.2.

Application
The CDE due to inhalation is determined for each sector using the highest calculated offsite value of X/Q for that sector. This value and the distance R to which it pertains are provided in Table F-5 of Appendix F. This dose component is included within the total CDE from all pathways (see equations A-13 and A-38).

A.1.4.3 Food Pathways

The committed dose equivalent (CDE) due to food pathways is calculated by the following expression:

$$D^{food}_{ja} = (t_r/365) \times \Sigma\{DFI_{ija}[I^V_{ia} + I^P_{ia} + I^M_{ia} + I^F_{ia}]\} \qquad \text{(A-18)}$$

The summation is over non-noble gas radionuclides 'i'.

D^{food}_{ja} — Food Pathways Committed Dose Equivalent (CDE) [mrem]
CDE commitment to organ j of an individual in age group a due to ingestion via food pathways (leafy vegetables, produce, milk, and meat) of non-noble gas radionuclides released in gaseous effluents.

t_r — Time Period of Release or Exposure [days]

(e.g., number of days in a quarter for a calendar quarter calculation).

1/365 — Conversion Constant (days to years) [yr/day]

DFI_{ija} — Ingestion Dose Commitment Factor [mrem/pCi]

Dose commitment to organ 'j' of an individual in age group 'a' per unit of activity of radionuclide 'i' ingested.

Assessment	Dose Factor	Age Group
10CFR50 App.I	Reg. Guide 1.109 Tables E-11 through E-14.	All (four)
10CFR20/40CFR190	Federal Guidance Report-11; Table 2.2	Adult only (average individual)

$I^V_{ia}, I^P_{ia}, I^M_{ia}, I^F_{ia}$ — Rate of Ingestion of Activity [pCi/yr]
Activity of radionuclide 'i' ingested annually by an individual in age group a from, respectively, the following:

- Leafy vegetables.
- Produce (nonleafy vegetables, fruits, and grain).
- Milk.
- Meat (flesh).

Calculated as follows:

$$I^V_{ia} = U^V_a f_V C^V_i \qquad \text{(A-19)}$$
$$I^P_{ia} = U^P_a f_P C^P i \qquad \text{(A-20)}$$
$$I^M_{ia} = U^M_a C^M_i \qquad \text{(A-21)}$$

$$I^F_{ia} = U^F_a C^F_i \quad \text{(A-22)}$$

U^V_a	Food Product Consumption Rate	[kg/yr]
U^P_a		[kg/yr]
U^M_a		[L/yr]
U^F_a		[kg/yr]

Annual consumption (usage) rate of leafy vegetables, produce, milk, or meat, respectively, for individuals in age group 'a'. See Table C-2 of Appendix C.

f_V	Food Product Affected Fraction
f_P	Fraction of ingested leafy vegetables (V) or produce (P) grown in the garden of interest. See Table C-1 of Appendix C.

C^V_i	Food Product Radioactivity Concentration	[pCi/kg]
C^P_i		[pCi/kg]
C^M_i		[pCi/L]
C^F_i		[pCi/kg]

C^V_i and C^P_i represent, respectively, the average concentration of radionuclide i in leafy vegetables and produce grown in the garden of interest. Calculated from the amount of radioactivity released and the relative deposition factor D/Q at the garden of interest. See Section A.1.4.3.1 below for the equation.

C^M_i and C^F_i represent, respectively, the average concentration of radionuclide i in milk and meat from the producer of interest. Calculated from the amount of radioactivity released and the relative deposition factor D/Q at the locations of the producers of interest. See Sections A.1.4.3.2 and A.1.4.3.3 below for equations.

Application

The dose due to ingestion of leafy vegetables and produce is calculated in each sector for a hypothetical garden assumed to be located at the location of highest offsite D/Q (see Table F-5 of Appendix F). The dose due to ingestion of milk and meat is calculated in each sector for the location of the nearest producer as specified in Table F-6 of Appendix F. If there is no actual milk or meat producer within 5 miles of the station, one is assumed to be located at 5 miles (food pathway calculations are not made for sectors in which the offsite regions near the station are over bodies of water).

A.1.4.3.1 Vegetation

The radioactivity concentration in leafy vegetables (C^V_i), produce (C^P_i), or other vegetation is calculated by the following expression:

$$C_i = [(d_i)(r)/(Y_v)(\lambda_{Ei})] \times [1 - \exp(-\lambda_{Ei} t_e)] [\exp(-\lambda_i t_h)](f_f) \quad \text{(A-23)}$$

C_i	Food Product Radioactivity Concentration	[pCi/kg]
	Average concentration of radionuclide 'i' in leafy vegetables, produce, or other vegetation.	
d_i	Deposition Rate	[(pCi/hr)/m^2]
	Rate at which radionuclide 'i' is deposited onto the ground.	

Calculated from the amount of radioactivity released and the relative deposition factor D/Q at the location of interest. See Section A.1.4.1 for an equation. See the Subsection "Application" in Section A.1.4.3 for the location assumptions used in determining d_i.

r — Vegetation Retention Factor

Fraction of deposited activity retained on vegetation. See Table C-1 of Appendix C.

Y_v — Agricultural Productivity Yield [kg/m^2]

The quantity of vegetation produced per unit area of the land on which the vegetation is grown. See Table C-1 of Appendix C.

λ_{EI} — Effective Decay Constant [hr^{-1}]

Effective removal rate constant for radionuclide 'I' from vegetation:

$$\lambda_{EI} = \lambda_I + \lambda_w \quad \text{(A-24)}$$

λ_I — Radiological Decay Constant [hr^{-1}]

Radiological decay constant for radionuclide 'I'. See Table C-7 of Appendix C.

λ_w — Weathering Decay Constant [hr^{-1}]

Removal constant for physical loss by weathering. See Table C-1 of Appendix C.

t_e — Effective Vegetation Exposure Time [hr]

Time that vegetation is exposed to contamination during the growing season. See Table C-1 of Appendix C.

t_h — Harvest to Consumption Time [hr]

Time between harvest and consumption. See Table C-1 of Appendix C.

f_f — Seasonal Growing Factor

Factor which accounts for the seasonal growth of vegetation. It has the value '1' during the growing season, '0' otherwise. See Table C-1 of Appendix C.

A.1.4.3.2 Milk

The radioactivity concentration in milk is calculated by the following expressions:

$$C^M_i = F_M\, C^f_i\, W_f \exp(-\lambda_i t_M) \quad \text{(A-25)}$$

$$C^f_i = f_e\, f_g\, C^g_i + (1 - f_e) C^s_i + f_e(1 - f_g) C^s_i \quad \text{(A-26)}$$

C^M_i	Milk Radioactivity Concentration Average concentration of radionuclide 'i' in milk from the producer of interest.	[pCi/L]
F_M	Milk Fraction Fraction of an animal's daily intake of radionuclide i which appears in each liter of milk (pCi/L in milk per pCi/day ingested by the animal). See Table C-3 of Appendix C.	[days/L]
C^f_i	Feed Concentration Average concentration of radionuclide 'i' in animal feed.	[pCi/kg]
W_f	Feed Consumption Amount of feed consumed by the animal each day. See Table C-1 of Appendix C.	[kg/day]
λ_i	Radiological Decay Constant Radiological decay constant for radionuclide 'i'. See Table C-7 of Appendix C.	[hr^{-1}]
t_M	Milk Transport Time Average time from the production of milk to its consumption. See Table C-1 of Appendix C.	[hr]
f_a	Pasture Time Fraction Fraction of time that animals graze on pasture. See Table C-1 of Appendix C.	
f_g	Pasture Grass Fraction Fraction of daily feed that is pasture grass when animals graze on pasture. See Table C-1 of Appendix C.	
C^g_i	Pasture Grass Concentration Concentration of radionuclide 'i' in pasture grass. Calculated using Equation A-20 with the seasonal growing factor $f_f = 1$ and with parameter values specified for the pasture grass and milk pathways in Table C-1 of Appendix C.	[pCi/kg]
C^s_i	Stored Feed Concentration Concentration of radionuclide 'i' in stored feed. Calculated using Equation A-20 for C_i with the seasonal growing factor $f_f = 1$ and parameter values specified for the stored feed and milk pathways in Table C-1 of Appendix C.	[pCi/kg]

A.1.4.3.3 Meat

The radioactivity concentration in meat is calculated by the following expression:

$$C^F_i = F_F\, C^f_i\, W_f \exp(-\lambda_i t_s) \qquad \text{(A-27)}$$

C^F_i	Meat Radioactivity Concentration Average concentration of radionuclide 'i' in meat from the producer of interest.	[pCi/kg]
F_F	Meat Fraction Fraction of an animal's daily intake of radionuclide 'i' which appears in each kilogram of flesh (pCi/kg in meat per pCi/day ingested by the animal). See Table C-3 of Appendix C.	[days/kg]
C^f_i	Feed Concentration Average concentration of radionuclide 'i' in animal feed. Calculated using the equation for C^f_i in the preceding sub-section with parameter values specified for the meat pathway in Table C-1 of Appendix C.	[pCi/kg]
W_f	Feed Consumption Amount of feed consumed by the animal each day. See Table C-1 of Appendix C.	[kg/day]
λ_i	Radiological Decay Constant Radiological decay constant for radionuclide 'i'. See Table C-7 of Appendix C.	[hr^{-1}]
t_s	Time From Slaughter to Consumption See Table C-1 of Appendix C.	[hr]

A.1.5 Dose Rate Due to Non-Noble Gas Radionuclides

Requirement
RETS limit the dose rate to any organ, due to radioactive materials in gaseous effluents released from a site to areas at and beyond the site boundary, to less than or equal to a dose rate of 1500 mrem/yr (see Section 12.4 of each station's RETS and Technical Specifications).

All stations consider the adult to be the receptor in calculating dose commitment to organs due to inhalation of non-noble gas radionuclides in gaseous effluents.

Equation
The dose rate to any adult organ due to inhalation is calculated by the following expression:

$$D^{inhal}_{ja} = (1E6)(R_a)\Sigma\{DFA_{ija}[(X/Q)_a Q'_{ia} + (X/Q)_v Q'_{iv} + (X/Q)_g Q'_{ig}]\} \qquad \text{(A-28)}$$

The summation is over non-noble gas radionuclides 'i'.

$\dot{D}^{inhal}_{ja}$	Inhalation Dose Rate	[mrem/yr]
	Rate of dose commitment to organ j of an individual in age group a due to inhalation of non-noble gas radionuclides released in gaseous effluents; j and a are chosen to correspond to an adult thyroid.	
Q'_{is} Q'_{iv} Q'_{ig}	Radionuclide Release Rate, Adjusted for Radiodecay Measured release rate of radionuclide 'i' from a stack, vent, or ground level release point, reduced to account for radiodecay in transit from the release point to the dose point. See Section A.1.3.2.	[µCi/sec]

The other parameters are defined in Section A.1.4.2.

Application
RETS require the dose rate due to non-noble gas radioactive materials in airborne effluents be determined to be within the above limit in accordance with a sampling and analysis program specified in the RETS (see Section 12.4 of each station's RETS and Technical Specifications).

To comply with this specification, each station obtains and analyzes samples in accordance with the sampling and analysis program in its RETS. The adult organ dose rate due to inhalation is calculated in each sector at the location of the highest offsite X/Q. The result for the sector with the highest organ inhalation dose rate is compared to the limit.

A.1.6 Operability and Use of Gaseous Effluent Treatment Systems

Requirement
10CFR50 Appendix I and the station RETS require that the ventilation exhaust treatment system and the waste gas holdup system be used when projected offsite doses in 31 days, due to gaseous effluent releases, from each reactor unit, exceed any of the following limits:

- 0.2 mrad to air from gamma radiation.
- 0.4 mrad to air from beta radiation.
- 0.3 mrem to any organ of a member of the public.

The nuclear power stations are required to project doses due to gaseous releases from the site at least once per 31 days.

Each station calculates doses for all members of the public (adult, teenager, child and infant) and then determines the maximum dose. The member of the public who receives the maximum dose will be reported.

Equation
Offsite doses due to projected releases of radioactive materials in gaseous effluents are calculated using Equations A-1, A-2 and A-13. Projected cumulative radionuclide releases are used in place of measured cumulative releases A_{is}, A_{iv} and A_{ig}.

Application

For a release attributable to a processing or effluent system shared by more than one reactor unit, the dose due to an individual unit is obtained by proportioning the effluents among the units sharing the system. The allocation procedure is specified in Chapter 10 of this manual.

A.2 LIQUID RELEASES

A.2.1 Dose

Requirement
The design objectives of 10CFR50, Appendix I and RETS provide the following limits on the dose or dose commitment to a member of the public from radioactive materials in liquid effluents released from each reactor unit to restricted area boundaries:

- During any calendar quarter, less than or equal to 1.5 mrem to the total body and less than or equal to 5 mrem to any organ.
- During any calendar year, less than or equal to 3 mrem to the total body and less than or equal to 10 mrem to any organ.

The organ doses due to radioactivity in liquid effluents are also used as part of the 40CFR190 compliance and are included in the combination of doses to determine the Total Effective Dose Equivalent (TEDE) used to demonstrate 10CFR20 compliance. (See Section A.4)

As noted earlier, dose assessments for 10CFR20 and 40CFR190 compliance are made for an adult using Federal Guidance Report No. 11 (Reference 93) dose conversion factors. Dose assessments for 10CFR50 Appendix I compliance are made for four age groups (adult/teenager/child/infant) using Regulatory Guide 1.109 (Reference 6) dose conversion factors.

Equation
The dose commitment from radioactive materials in liquid effluents is calculated for the four age groups considering only the two principal pathways for radiation exposure. The dose commitment to each organ (and to the total body) is obtained as the sum of contributions from consumption of drinking water and fish:

$$D^{liq}_{ja} = D^{water}_{ja} + D^{fish}_{ja} \qquad \text{(A-29)}$$

$$D^{water}_{ja} = (1.1E\text{-}3)(8760)(U^{w}_{a}M^{w}/F^{w}) \times \Sigma\{ A_i DFI_{ija} \exp(-\lambda_i t^{w})\} \qquad \text{(A-30)}$$

$$D^{fish}_{ja} = (1.1E\text{-}3)(8760)(U^{f}_{a}M^{f}/F^{f}) \times \Sigma\{ A_i B_i DFI_{ija} \exp(-\lambda_i t^{f})\} \qquad \text{(A-31)}$$

The summations are over i radionuclides.

D^{liq}_{ja}	Total organ, and total body, dose commitment (CDE) Due to Radioactivity in Liquid Effluents Dose commitment to organ j (and total body) of age group a consuming water and fish containing radioactivity released in liquid effluents.	[mrem]
D^{water}_{ja}	Committed Dose Equivalent (CDE) Due to Consumption of Drinking Water	[mrem]

Dose commitment to organ j of age group a consuming water containing radioactivity released in liquid effluents.

D^{fish}_{ja} — Committed Dose Equivalent (CDE) Due to Consumption of Fish — [mrem]

Dose commitment to organ j of age group a consuming fish containing radioactivity released in liquid effluents.

U^{w}_{a}, U^{f}_{a} — Usage Factor — [L/hr, kg/hr]

Consumption rate of water (U^{w}_{a}) or fish (U^{f}_{a}). See Table C-2 of Appendix C.

$1/M^{w}$, $1/M^{f}$ — Dilution Factor

Measure of dilution prior to withdrawal of potable water or fish. See Table F-1 of Appendix F.

F^{w} — Average Flow Rate — [cfs]

Average flow rate of receiving body of water at point where Potable water is taken. See Table F-1 of Appendix F.

F^{f} — Near-Field Flow Rate — [cfs]

Near field flow rate of receiving body of water (in region where fish are taken). See Table F-1 of Appendix F.

A_i — Radionuclide Release — [μCi]

Measured amount of radionuclide 'i' released in liquid effluents during the time period under consideration.

DFI_{ija} — Ingestion Dose Factor — [mrem/pCi]

Dose commitment to organ j (and total body) of an individual in age group 'a' per unit of activity of radionuclide 'i' ingested.

Assessment	Dose Factor	Age Group
10CFR50 App.I	Reg. Guide 1.109 Tables E-11 through E-14.	All (four)
10CFR20/40CFR190	Federal Guidance Report-11; Table 2.2	Adult (average)

λ_i — Decay Constant — [hr^{-1}]
Radiological decay constant of radionuclide 'i'. See Table C-7 of Appendix C.

t^{w}, t^{f} — Elapsed Time — [hr]

	Average elapsed time between release and consumption of potable water or fish. See Table F-1 of Appendix F.	
B_i	Bioaccumulation Factor	[L/kg]
	Equilibrium ratio of the concentration of radionuclide 'i' in fish (pCi/kg) to its concentration in water (pCi/L). See Table C-8 of Appendix C.	
1.1E-3	Conversion Constant	[(pCi/liter) per (μCi/yr)/(cfs)]
	Factor to convert to pCi/liter from (μCi/yr)/(cfs).	
8760	Conversion Constant (hours per year)	[hr/yr]

Application
RETS require determination of cumulative and projected dose contributions from liquid effluents for the current calendar quarter and the current calendar year at least once per 31 days. (see Section 12.3 of each station's RETS and/or Technical Specifications).

For a release attributable to a processing or effluent system shared by more than one reactor unit, the dose due to an individual unit is obtained by proportioning the effluents among the units sharing the system. The allocation procedure is specified in ODCM Chapter 10.

A.2.2 Liquid Effluent Concentrations Requirement

Requirement
One method of demonstrating compliance to the requirements of 10CFR20.1301 is to demonstrate that the annual average concentrations of radioactive material released in gaseous and liquid effluents do not exceed the values specified in 10CFR20 Appendix B, Table 2; Column 2. (See 10CFR 20.1302(b)(2).) However, as noted in Section A.5.1, this mode of 10CFR20.1301 compliance has not been elected.

As a means of assuring that annual concentration limits will not be exceeded, and as a matter of policy assuring that doses by the liquid pathway will be ALARA; RETS provides the following restriction:

"The concentration of radioactive material released in liquid effluents to unrestricted areas shall be limited to ten times the concentration values in Appendix B, Table 2, Column 2 to 10CFR20.1001-20.2402."

This also meets the requirement of Station Technical Specifications and RETS.

Equation
According to the footnotes to 10CFR20 Appendix B, Table 2; Column 2, if a radionuclide mix of known composition is released, the concentrations must be such that

$$\Sigma\{C_i / 10\ ECL_i\} \leq 1 \qquad \text{(A-32)}$$

where the summation is over index i (radionuclides).

C_i	Radioactivity Concentration in Liquid Effluents to the Unrestricted Area	[μCi/mL]
	Concentration of radionuclide 'i' in liquid released to the unrestricted area.	
ECL_i	Effluent Concentration Limit in Liquid	[μCi/mL]

	Effluents Released to the Unrestricted Area
	The allowable annual average concentration of radionuclide 'i' in liquid effluents released to the unrestricted area. This concentration is specified in 10CFR20 Appendix B, Table 2; Column 2. Concentrations for noble gases are different and are specified in the stations' Technical Specifications/RETS.
10	Multiplier to meet the requirements of Technical Specifications (if approved).

If either the identity or concentration of any radionuclide in the mixture is not known, special rules apply. These are given in the footnotes in 10CFR20 Appendix B, Table 2; Column 2.

Application
The RETS and Technical Specifications require a specified sampling and analysis program to assure that liquid radioactivity concentrations at the point of release are maintained within the required limits.

To comply with this provision, each nuclear power station obtains and analyzes samples in accordance with the radioactive liquid waste (or effluent) sampling and analysis program in its RETS. Radioactivity concentrations in tank effluents are determined in accordance with Equation A-33 in the next section. Comparison with the Effluent Concentration Limit is made using Equation A-32.

A.2.3 Tank Discharges

When radioactivity is released to the unrestricted area with liquid discharge from a tank (e.g., a radwaste discharge tank), the concentration of a radionuclide in the effluent is calculated as follows:

$$C_i = (C_i^t)(F^r)/(F^d + F^r) \qquad \text{(A-33)}$$

C_i	Concentration in Liquid effluent to the unrestricted area.	[µCi/mL]
	Concentration of radionuclide 'i' in liquid released to the unrestricted area.	
C_i^t	Concentration in the Discharge Tank	[µCi/mL]
	Measured concentration of radionuclide 'i' in the discharge tank.	
F^r	Flow Rate, Tank Discharge	[cfs]
	Measured flow rate of liquid from the discharge tank to the initial dilution stream.	
F^d	Flow Rate, Initial Dilution Stream	[cfs]
	Measured flow rate of the initial dilution stream that carries the radionuclides to the unrestricted area boundary (e.g., circulating cooling water or blowdown from a cooling tower or lake).	

A.2.4 Tank Overflow

Requirement
To limit the consequences of tank overflow, the RETS/Technical Specifications may limit the quantity of radioactivity that may be stored in unprotected outdoor tanks. Unprotected tanks are tanks that are not surrounded by liners, dikes, or walls capable of holding the tank contents and that do not have tank overflows and surrounding area drains connected to the liquid radwaste treatment system. The specific objective is to provide assurance that in the event of an uncontrolled release of a tank's contents, the resulting radioactivity concentrations beyond the unrestricted area boundary, at the nearest potable water supply and at the nearest surface water supply, will be less than the limits of 10CFR20 Appendix B, Table 2; Column 2.

The Technical Specifications and RETS may contain a somewhat similar provision. For most nuclear power stations, specific numerical limits are specified on the number of curies allowed in affected tanks.

Application
Table F-1 of Appendix F provides information on the limits applicable to affected stations. The limits are as stated for some stations in the station Technical Specifications.

A.2.5 Operability and Use of the Liquid Radwaste Treatment System

Requirement
The design objectives of 10CFR50, Appendix I and RETS/Technical Specifications require that the liquid radwaste treatment system be operable and that appropriate portions be used to reduce releases of radioactivity when projected doses due to the liquid effluent from each reactor unit to restricted area boundaries exceed either of the following (see Section 12.3 of each station's RETS or Technical Specifications);

- 0.06 mrem to the whole body in a 31 day period.
- 0.2 mrem to any organ in a 31 day period.

Equation
Offsite doses due to projected releases of radioactive materials in liquid effluents are calculated using Equation A-29. Projected radionuclide releases are used in place of measured releases A_i.

A.2.6 Drinking Water

Five nuclear power stations (Braidwood, Dresden, LaSalle, Quad Cities, and Zion) have requirements for calculation of drinking water dose that are related to 40CFR141, the Environmental Protection Agency National Primary Drinking Water Regulations. These are discussed in Section A.6.

A.2.7 Non-routine Liquid Release Pathways

Cases in which normally non-radioactive liquid streams (such as the Service Water) are found to contain radioactive material are non-routine will be treated on a case specific basis if and when this occurs. Since each station has sufficient capacity to delay a liquid release for reasonable periods of time, it is expected that planned releases will not take place under these circumstances. Therefore, the liquid release setpoint calculations need not and do not contain provisions for treating multiple simultaneous release pathways.

A.3 DOSE DUE TO CONTAINED SOURCES

There are presently two types of contained sources of radioactivity which are of concern in ComEd offsite radiological dose assessments. The first source is that due to gamma rays from nitrogen-16 (N^{16}) carried over to the turbine in BWR steam. The second source is that due to gamma rays associated with radioactive material resident in onsite radwaste storage facilities.

Gamma radiation from these sources contributes to the whole body dose (deep dose equivalent).

A.3.1 BWR Skyshine

The contained onsite radioactivity source which results in the most significant offsite radiation levels at ComEd nuclear power stations is skyshine resulting from N^{16} decay inside turbines and steam piping at boiling water reactor (BWRs).

The N^{16} that produces the skyshine effect is formulated through neutron activation of the oxygen atoms (oxygen-16, or O^{16}) in reactor coolant as the coolant passes through the operating reactor core. The N^{16} travels with the steam produced in the reactor to the steam driven turbine. While the N^{16} is in transport, it radioactively decays with a half-life of about 7 seconds and produces 6 to 7 MeV gamma rays. Typically, offsite dose points are shielded from a direct view of components containing N^{16}, but there can be skyshine radiation at offsite locations due to scattering of gamma rays off the mass of air above the steamlines and turbine.

The offsite dose rate due to skyshine has been found to have the following dependencies:

- The dose rate decreases as distance from the station increases.
- The dose rate increases non-linearly as the power production level increases.
- The dose rate increases when hydrogen is added to the reactor coolant, an action taken to improve reactor coolant chemistry characteristics (see Reference 39).

To calculate offsite dose in a given time period due to skyshine, a boiling water nuclear power station must track the following parameters:

- The total gross energy E_h produced with hydrogen being added.
- The total gross energy E_o produced without hydrogen being added.

The turbines at BWR sites are sufficiently close to each other that energy generated by the two units at each site may be summed.

An initial estimate of BWR skyshine dose is calculated per the following equation:

$$D^{sky} = (K)\,(E_o + M_h E_h) \times \Sigma\{OF_k SF_k \exp(-0.007 R_k)\} \qquad \text{(A-34)}$$

The summation is over all locations k occupied by a hypothetical maximally exposed member of the public characterized by the parameters specified in Table F-8. The parameters in Equation A-34 are defined as follows:

D^{sky}	Dose Due to N-16 Skyshine Gamma dose (deep dose equivalent) due to BWR N-16 skyshine for the time period of interest.	[mrem]
K	Empirical Constant A constant determined by fitting data measured at the each station.	[mrem/(MWe-hr)]
E_o	Electrical Energy Generated Without Hydrogen Addition Total gross electrical energy generated without hydrogen addition in the time period of interest.	[MWe-hr]
E_h	Electrical Energy Generated with Hydrogen Addition	[MWe-hr]

Total gross electrical energy generated with hydrogen addition in the period of interest.

M_h — Multiplication Factor for Hydrogen Addition

Factor applied to offsite dose rate when skyshine is present. Hydrogen addition increases main steam line radiation levels typically up to a factor of approximately 5 (see Page 8-1 of Reference 39). M_h is station specific and is given in Table F-8 of Appendix F.

OF_k — Occupancy Factor

The fraction of time that the dose recipient spends at location 'k' during the period of interest. See Table F-8 of Appendix F.

SF_k — Shielding Factor

A dimensionless factor that accounts for shielding due to occupancy of structures. $SF_k = 0.7$ if there is a structure at location k; $SF_k = 1.0$ otherwise. See Table F-8 of Appendix F.

0.007 — Empirical Constant [m^{-1}]

A constant determined by fitting data measured at the Dresden station (see Reference 45).

R_k — Distance [m]

Distance from the turbine to location 'k'. See Table F-8 of Appendix F.

A.3.2 Dose from Onsite Radwaste Storage Facilities

Low level radioactive waste may be stored at any, or all ComEd nuclear power stations in the following types of storage facilities:

- Interim Radwaste Storage Facility (IRSF)
- Concrete vaults containing 48 radwaste liners (48-Pack)
- Dry Active Waste (DAW) facilities
- Butler buildings/warehouses
- Steam generator storage facilities

The "48-Pack" is a shielded concrete vault which is designed to hold three tiers of radwaste liners in a four by four array. The outer shell of the "48-Pack" is a three-foot thick concrete wall and a two and one-half foot thick concrete cover slab. The vault is placed on a poured concrete slab. The liners may have an average surface dose rate of fifteen (15) rem per hour (or up to 380 rem/hr if a 50.59 evaluation has been completed).

The DAW facility will contain low-level radioactive waste that would result in dose rates less than the 10CFR20 requirements.

Preliminary locations for the 48-Packs and the DAW facilities have been selected for each station. Preliminary dose assessments, which include site-specific occupancy factors, indicate that the expected doses, to members of the public, when fully loaded, will be well within the 40CFR190 annual limits.

The dose rates resulting from these radwaste storage facilities will be monitored frequently as they are being utilized, and if necessary, a dose calculation model similar to that of Equation A-34 will be developed and placed in the ODCM.

A.4 Total Dose Limits (10CFR20 and 40CFR190)

The regulatory requirements of 10CFR20 and 40CFR190 each require "total" doses to be assembled in an appropriate form. Sections A.1 and A.2 considered organ doses from the gaseous and liquid effluent streams. The regulations of 10CFR20 and 40CFR190 also require consideration of direct radiation exposure from contained sources of radioactivity. Section A.3 addresses the direct radiation component. The following sections will describe the methodology of assessing direct radiation dose and then the manner in which the various doses are combined to obtain the appropriate "total" for regulatory compliance purposes.

Annual dose limits in 10CFR20 are now expressed in terms of Total Effective Dose Equivalent (TEDE) where radiation exposures due to inhalation, ingestion and external sources are appropriately weighted to provide a uniform risk based comparison. As defined in 10CFR20, TEDE is equal to the sum of the deep-dose equivalent from external exposures and the committed effective dose equivalent (CEDE) from internal exposures.

A.4.1 Deep Dose Equivalent

The deep dose equivalent, H_d, is comprised of three parts:

1) Whole body dose (deep dose equivalent) due to noble gas radionuclides in gaseous effluents (Section A.1.2),
2) Dose due to contained sources (Section A.3) and
3) Whole body dose due to radioactivity deposited on the ground (Section A.1.4.1).

Expressed as an equation using the notation used in this appendix, then;

$$H_d = D_{wb} + D^{sky} + D^{gnd} \qquad \text{(A-35)}$$

H_d	Deep Dose Equivalent (DDE) Dose equivalent due to external whole-body exposure at a tissue depth of 1 cm.	[mrem]
D_{wb}	Whole Body Dose, Effluents DDE due to gamma radiation from noble gas radionuclides released in gaseous effluents. See Equation A-6.	[mrem]
D^{sky}	Dose Due to N-16 Skyshine DDE due to skyshine for the period of interest. See Equation A-34.	[mrem]
D^{gnd}	Dose From Ground Deposition DDE due to ground deposition of non-noble gas radionuclides released in gaseous effluents. See Equation A-14.	[mrem]

A.4.2 Committed Effective Dose Equivalent (CEDE)

The CEDE for internal exposures ($H_{E,50}$) is the sum of the products of the weighting factors applicable to each of the body organs, or tissues, that are irradiated and the committed dose equivalent (CDE) to those tissues.

$$H_{E,50} = \Sigma_T W_T H_{T,50} \qquad \text{(A-36)}$$

$H_{E,50}$ Committed Effective Dose Equivalent [mrem]
The committed effective dose equivalent due to internal exposures.

W_T Weighting Factor
The weighting factor for organ or tissue (T) which is the proportion of stochastic effects resulting from the irradiation of that organ or tissue to the total risk of stochastic effects when the whole body is irradiated uniformly. Values of W_T are given in Reference #93, Federal Guidance Report 11and in 10CFR20.

$H_{T,50}$ Committed Dose Equivalent [mrem]
The total dose equivalent to organs or tissues (T) that will be received, after an intake of radioactive material by an individual, over the 50 year period following the intake.

The general methodology for calculating the committed dose equivalents from airborne releases is given in Section A.1.4; and from liquid releases in Section A.2.1. In terms of parameters developed earlier in this document, then,

$$H_{T,50} = D^{NNG}_{ja} + D^{liq}_{ja} \quad \text{(A-37)}$$

D^{NNG}_{ja} CDE Due to Non-Noble Gas Radionuclides [mrem]

The sum of the dose and dose commitment to organ j of an individual of age group 'a' due to non-noble gas radionuclides released in gaseous effluents during a specified period. See Equation A-13.

D^{liq}_{ja} CDE for an Adult Due to Radioactivity Released in Liquid Effluents [mrem]

The CDE commitment to organ j of an individual of age group 'a' resulting from consumption water and fish containing radioactivity released in liquid effluents during a specified period. See Equation A-29.

In order to be consistent with the dose factor data, upon which the current revision of 10CFR20 is based, the CDEs D^{NNG}_{ja} and D^{liq}_{ja} are now calculated using the dose factor data included in Federal Guidance Report No. 11, (Reference 93). The Regulatory Guide 1.109 dose factors (Reference 6 and ODCM, Appendix C) are still used for 10CFR50 Appendix I compliance.

A.4.3 Total Effective Dose Equivalent

The above relationships may then be combined into a single equation for the total effective dose equivalent, TEDE, as follows:

$$TEDE = H_d + H_{E,50} = D_{wb} + D^{sky} + D^{gnd} + \Sigma_T W_T (D^{NNG}_{ja} + D^{liq}_{ja}) \quad \text{(A-38)}$$

TEDE Total Effective Dose Equivalent [mrem]

The sum of the deep dose equivalent (for external exposures) and the committed effective dose equivalent (for internal exposures).

A.5 COMPLIANCE TO TOTAL DOSE LIMITS

A.5.1 Total Effective Dose Equivalent Limit - 10CFR20 Compliance

Requirement
Each station's RETS limits the Total Effective Dose Equivalent (TEDE) to an annual limit of 100 mrem, as required by 10CFR20.1301 (a)(1). The regulations offer licensees the option of demonstrating compliance by one of two methods 10CFR20.1302 (b)(1) or 10CFR20.1302 (b)(2). The RETS state that the 10CFR20.1302 (b)(1) methodology has been selected to demonstrate compliance to 10CFR20.1301 (a)(1).

The general methodology for calculating the TEDE is given in Section A.4.3. In lieu of specific regulatory guidance, this evaluation is conservatively made for an adult living at the nearest residence.

In August of 1995, a revision to 10CFR20 was implemented that changed the definition of a member of the public. As a result, for each nuclear station, estimated doses were calculated for a member of the public who enters the site boundary, but is not authorized for unescorted access to the protected area of the site and does not enter any radiologically posted areas on the site. Realistic assumptions were made for occupancy times and locations visited while within the site boundary.

These evaluations indicate that the doses estimated for these members of the public are well within the 10CFR20 limits. These dose evaluations will be performed annually and if necessary, a model will be developed and included in the ODCM.

Equation
The TEDE is evaluated using Equation A-38.

Application
This evaluation is used to demonstrate compliance to 10CFR20 and satisfy station RETS and Technical Specifications (see Chapter 12).

A.5.2 Total Dose due to the Uranium Fuel Cycle (40CFR190)

Requirement

RETS and 40CFR190 limit the annual (calendar year) dose or dose commitment to any member of the public due to releases of radioactivity and to radiation from uranium fuel cycle sources to the following:

- Less than or equal to 25 mrem to the whole body.
- Less than or equal to 25 mrem to any organ except the thyroid.
- Less than or equal to 75 mrem to the thyroid.

Total Dose Components
This requirement includes the total dose from operations at the nuclear power station. This includes doses due to radioactive effluents (airborne and liquid) and dose due to direct radiation from non-effluent sources (e.g., sources contained in systems on site). It also includes dose due to plants under consideration, neighboring plants and dose due to other facilities in the uranium fuel cycle.

The operations comprising the uranium fuel cycle are specified in 40CFR190.02(b). The following are included to the extent that they directly support the production of electrical power for public use utilizing nuclear energy:

- Milling of uranium ore.
- Chemical conversion of uranium.

- Isotopic enrichment of uranium.
- Fabrication of uranium fuel.
- Generation of electricity by a light-watered-cooled nuclear power plant using uranium fuel.
- Reprocessing of spent uranium fuel.

Excluded are:

- Mining operations.
- Operations at waste disposal sites.
- Transportation of any radioactive material in support of these operations.
- The re-use of recovered non-uranium special nuclear and by-product materials from the cycle.

When Compliance Assessment is Required.
The calculation of compliance to 40CFR190 regulations is now required as part of demonstration of compliance to 10CFR20 regulations.

Equation

The dose due to the uranium fuel cycle is determined with equations A-35 and A-37, sections A.4.1 and A.4.2 respectively.

A.5.3 Summary of Compliance Methodology

The required compliance is given in Tables 2-1, 2-2 and 2-3. In Table 2-1, the dose components are itemized and referenced, and an indication of their regulatory application is noted. A more detailed compliance matrix is given in Table 2-3. The locations of dose receivers for each dose component are given in Table 2-2.

Further, Table 2-2 states the location of the receiver and occupancy factors, if applicable. In general, the receiver spends time in locations that result in maximum direct dose exposure and inhales and ingests radioactivity from sites that yield maximum pathway doses. Thus, the dose calculated is a very conservative one compared to the "average" receiver who does not go out of his way to maximize radioactivity uptakes. Finally, the connection between regulations, the ODCM equations and the station RETS and Technical Specifications is given in Table 12-0.

A.6 DOSE DUE TO DRINKING WATER (40CFR141)

The National Primary Drinking Water Regulations, 40CFR141, contain the requirements of the Environmental Protection Agency applicable to public water systems. Included are limits on radioactivity concentration. Although these regulations are directed at the owners and operators of public water systems, several stations have requirements in their Technical Specifications related to 40CFR141.

A.6.1 40CFR141 Restrictions on Manmade Radionuclides

Section 141.16 states the following:

(a) The average annual concentration of beta particle and photon radioactivity from man-made radionuclides in drinking water shall not produce an annual dose equivalent to the total body or any internal organ greater than 4 millirem/year.

(b) Except for the radionuclides listed in Table A-0, the concentration of man-made radionuclides causing 4 mrem total body or organ dose equivalents shall be calculated on the basis of drinking 2 liter of water per day. (Using the 168 hour data listed in "Maximum Permissible Body Burdens and Maximum Permissible Concentration of Radionuclides in Air or Water for Occupational Exposure, "NBSHandbook 69 as amended August 1963, U.S. Department of Commerce.). If two or more

radionuclides are present, the sum of their annual dose equivalents to the total body or any organ shall not exceed 4 millirem/year.

TABLE A-0
AVERAGE ANNUAL CONCENTRATIONS ASSUMED TO PRODUCE A TOTAL BODY OR ORGAN DOSE OF 4 MREM/YR

Radionuclide	Critical Organ	pCi / liter
Tritium	Total body	20,000
Strontium-90	Bone marrow	8

A.6.2 Application

The projection or calculation of dose due to the drinking water pathway is made using Equation A-30. Projections are made using projected radionuclides releases in place of measured releases A_i. Doses calculated using Equation A-30 may differ from doses determined by the methodology prescribed in 40CFR141.16.

When required, a nuclear power station prepares a special report on radiological impact at the nearest community water system. This system is taken as the one listed in Table A-3 of this appendix. The report should include the following:

- The doses calculated by Equation A-30.
- A statement identifying the dose calculation methodology (e.g., a reference to this manual).
- A statement that the doses calculated by the ODCM methodology are not necessarily the same as doses calculated by the methodology prescribed in 40CFR141.16.
- The data used to calculate the doses. This information includes the amounts of radioactivity released and the flow rate and dilution values used (see Table F-1). This information is provided to assist the operator of the community water system in performing its own dose assessment.

Table A-1

COMPLIANCE MATRIX

Regulation	Dose to be compared to limit
10CFR50 Appendix I	• Gamma air dose and beta air dose due to airborne radioactivity in effluent plume. • Whole body and skin dose due to airborne radioactivity in effluent plume are reported only if certain gamma and beta air dose criteria are exceeded. • CDE for all organs and all four age groups due to iodine and particulate in effluent plume. All pathways are considered. • CDE for all organs and all four age groups due to radioactivity in liquid effluents.
10CFR20	• TEDE, totaling all deep dose equivalent components (direct, ground and plume shine) and committed effective dose equivalents (all pathways, both airborne and liquid-borne). CDE evaluation is made for adult only using FGR 11 database.
40CFR190 (now, by reference, also part of 10CFR20	• Whole body dose (DDE) due to direct radiation, ground and plume exposure from all sources at a station. • Organ doses (CDE) to an adult due to all pathways.
RETS/ODCM	• "Instantaneous" whole body (DDE), thyroid (CDE) and skin (SDE) dose rates to an adult due to radioactivity in airborne effluents. For the thyroid dose only inhalation is considered. • "Instantaneous" concentration limits for liquid effluents.

Table A-2
Release Point Classifications

Station	Release Point	Release Point Classification[a]
Braidwood 1 & 2	Vent Stacks	Vent (Mixed Mode)
Byron 1 & 2	Vent Stacks	Vent (Mixed Mode)
Dresden 1	Plant Chimney	Stack (Elevated)
Dresden 2 & 3	Chimney	Stack (Elevated)
	Reactor Building Ventilation Exhaust Stack	Vent (Mixed Mode)
LaSalle 1 & 2	Main Station Vent Stack	Stack (Elevated)
	Standby Gas Treatment Stack[b]	Stack (Elevated)
Quad Cities 1 & 2	Chimney	Stack (Elevated)
	Reactor Building Ventilation Exhaust Stack	Vent (Mixed Mode)
Zion 1 & 2	Vent Stacks	Ground Level

[a]These classifications are based on Sargent & Lundy NSLD Calculation No. CEC-4-88;Rev. 0, 10/19/88. The definitions of release point classifications (stack, vent and ground level) are given in Section 4.1.4.

[b]The LaSalle standby gas treatment stack is located inside the main station vent stack.

Table A-3
Nearest Downstream Community Water Systems

Characteristics of Nearest
Affected Downstream Community
Water Supply

Station	ComEd Nuclear Facilities Upstream of Station	Location and Distance[a]	Other ComEd Nuclear Stations Upstream of Water Supply
Braidwood	None	Wilmington, 5 river miles	None
Byron	None	None within 115 river miles	NA[b]
Dresden	Braidwood	Peoria, 106 river miles	Braidwood LaSalle
LaSalle	Braidwood Dresden	Peoria, 97 river miles	Braidwood Dresden
Quad Cities	None	E. Moline, 16 river miles	None
Zion	None	Lake County Intake, 1.4 miles	None

[a]ODCM Bases and Reference Document (Reference 101) Table O-2 and O-6 provide the bases of the location and distance data.

[b]NA = not applicable. For purposes of the calculations in the ODCM, there are no community water supplies affected by liquid effluents from Byron Station. This is based on the absence of community water supplies between the Byron Station liquid discharge to the Rock River and the confluence of the Rock and Mississippi Rivers, 115 miles downstream.

Table A-4

40CFR190 Compliance

40CFR190 Dose	Annual Limit (mrem)	ODCM Equivalent Dose and Equation Number
Whole Body	25	Deep Dose Equivalent; A-35
Thyroid	75	Thyroid Committed Dose Equivalent; A-37 evaluated for thyroid
Other Organs	25	Organ Committed Dose Equivalent; A-37 evaluated for all organs except thyroid

Notes:

1. The evaluation is made considering the following sources:
   a. Radioactivity in contained sources within the station;
   b. Radioactivity in station gaseous and liquid effluents.
2. Dose contributions from neighboring stations and other facilities in the nuclear fuel cycle.

APPENDIX B

MODELS AND PARAMETERS FOR AIRBORNE and LIQUID EFFLUENT CALCULATIONS

TABLE OF CONTENTS

PAGE

SECTION 1: Models and Parameters for AIRBORNE Effluent Calculations

B.0 INTRODUCTION B-1

B.1 METEOROLOGICAL DATA AND PARAMETERS B-1

1. Data B-2
2. Joint Frequency Distribution B-2
   1. Downwind Direction Versus Upwind Direction B-2
   2. Stack JFD B-3
   3. Ground Level JFD B-3
   4. Vent JFDs B-3
3. Average Wind Speed B-4
   1. Stack Release B-5
   2. Ground Level Release B-5
   3. Vent Release B-5

B.2 GAUSSIAN PLUME MODELS B-6

1. Mathematical Representation B-6
2. Sector-Averaged Concentration B-7

B.3 RELATIVE CONCENTRATION FACTOR X/Q B-7

1. Stack Release B-8
   1. Effective Release Height B-9
      1. Plume Rise B-9
      2. Terrain Effects B-11
2. Ground Level Release B-11
3. Vent Release B-12
4. Removal Mechanisms B-12

B.4 RELATIVE DEPOSITION FACTOR D/Q B-12

1. Stack Release B-13
2. Ground Level Release B-14
3. Vent Release B-14

B.5 GAMMA AIR DOSE FACTORS (S_i, V_i, G_i) B-15

1. Stack Release B-15
2. Ground Level Release B-17
3. Vent Release B-17

APPENDIX B
Table of Contents (Cont'd)

		PAGE
B.6	WHOLE BODY DOSE FACTORS ($\bar{S}_i \bar{V}_i \bar{G}_i$)	B-18
	1. Stack Release	B-18
	2. Ground Level Release	B-18
	3. Vent Release	B-19
B.7	BETA AIR AND SKIN DOSE FACTORS (L_i, $\bar{L}_i$)	B-19
B.8	GROUND PLANE DOSE CONVERSION FACTOR DFG_i	B-19
B.9	INHALATION DOSE COMMITMENT FACTOR DFA_{ija}	B-20
B.10	INGESTION DOSE COMMITMENT FACTOR DFI_{ija}	B-20
B.11	MEASURED RELEASE PARAMETERS	B-20
B.12	RADIOLOGICAL DECAY CONSTANTS	B-20
B.13	PRODUCTION/EXPOSURE PARAMETERS	B-20
SECTION 2:	**Models and Parameters for LIQUID Effluent Calculations:**	
B.14	INTRODUCTION	B-21
B.15	DOSE	B-21
	1. Drinking Water	B-21
	2. Aquatic Foods (Fish)	B-22
	3. Parameters	B-22
	1. Flow, Dilution, and Transport Time	B-22
	1. River Model	B-22
	2. Lake Michigan Model	B-23
	2. Dose Factors	B-23
	3. Measured Releases	B-23
	4. Radiological Decay	B-23
	5. Consumption	B-24
B.16	CONCENTRATION IN TANK DISCHARGES	B-24

APPENDIX B

LIST OF TABLES

NUMBER	TITLE	PAGE
B-1	Portion of an Example Joint Frequency Distribution	B-25

LIST OF FIGURES

NUMBER	TITLE	PAGE
B-1	Instantaneous View of a Plume	B-26
B-2	A Gaussian Curve	B-27
B-3	Effect of Observation Period on Plume Shape	B-28
B-4	A Gaussian Plume	B-29
B-5	Illustration of Model for Calculating Dose Due to Radioactivity Release	B-30
B-6	Illustration of Model for Dilution of Tank Discharge	B-31

SECTION 1:

MODELS AND PARAMETERS FOR AIRBORNE EFFLUENT CALCULATIONS

B.0 INTRODUCTION

The equations used for calculation of doses due to radioactive airborne effluents are given in Section A.1 of Appendix A. The equations involve the following types of parameters:

- **Meteorological Parameters**
  These include X/Q, D/Q, and wind speed. Their values are based on historical average atmospheric conditions at a site for a selected multi-year historical period (see Section 4.1.5).
- **Dose Factors**
  These parameters are used to provide a simple way to calculate doses and dose rates due to gamma and beta radiation. Some of these parameters are independent of meteorological conditions and therefore generic (i.e., not station-specific). Others have values based on historical average atmospheric conditions for a selected multi-year historical period and are therefore station-specific.
- **Measured Release Parameters**
  These are measured values of radioactivity releases and release rates.
- **Radiological Decay Constants**
  These are used to account for the radioactive decay between the release of radioactivity to the environment and the exposure of persons to it.
- **Production/Exposure Parameters**
  These are parameters characterizing agricultural production (e.g., length of growing season, transport times) and human exposure patterns (e.g., exposure period, breathing rate, food consumption rates). These parameters affect the quantities of radioactivity to which persons may be exposed.

This appendix discusses the methodology used to determine values of these parameters. Section B.1 addresses how the historical meteorology of a site is characterized by use of a function called the joint frequency distribution. Section B.1 and Sections B.3 through B.6 present equations that use the joint frequency distribution to obtain values for site-specific meteorological and dose parameters. Most of these equations involve a mathematical model of a plume known as the Gaussian plume model. This model is developed in Section B.2. Various generic dose factors are discussed in Sections B.7 through B.10. The other parameters are discussed in the remaining sections.

B.1 METEOROLOGICAL DATA AND PARAMETERS

Predicting where airborne effluent will travel requires information on the following:

- Wind speed
- Wind direction
- Atmospheric turbulence

The greater the atmospheric turbulence, the more an effluent plume will tend to broaden and the more dilute the concentration will be. Atmospheric turbulence is affected by the general condition of the atmosphere (e.g., the vertical temperature distribution) and by local features (e.g., objects that protrude into the wind stream). A commonly used classification scheme for the degree of atmospheric turbulence associated with the general condition of the atmosphere involves seven stability classes:

A Extremely Unstable
B Moderately Unstable
C Slightly Unstable
D Neutral
E Slightly Stable
F Moderately Stable
G Extremely Stable

This classification scheme is based on Reference 5, Table 1. Each class is associated with a particular range of wind direction fluctuations and of vertical temperature gradients in the atmosphere. These are specified in Table C-4 of Appendix C.

B.1.1 Data

Historical atmospheric conditions at each nuclear power station were recorded by an instrumented meteorological tower that measured wind speed, wind direction, and temperature at various heights. Hourly average values of wind speed, wind direction, and stability class were determined. The difference in temperature between two heights was used to assign an atmospheric stability class based on the correlation between temperature gradient and stability class in Table C-4 of Appendix C.

In obtaining the data, quality assurance checks and corrections were made. Also, corrections were applied to compensate for the limitations of wind sensors at low speeds. A calm was said to exist if the wind speed was less than that of the threshold of either the anemometer (wind speed meter) or the wind direction vane. For calm conditions, a wind speed equal to one-half of the higher threshold was assigned. For each stability class, the wind directions during calm conditions were assumed to be distributed in proportion to the observed wind direction distribution of the lowest non-calm wind speed class.

B.1.2 Joint Frequency Distribution

The data for a particular historical period are summarized by developing a joint frequency distribution (JFD). Each such distribution specifies the fraction of time during the historical period that the following jointly occur:

- Wind speed within a particular range (wind speed class).
- Downwind direction in one of the 16 sectors corresponding to the 16 principal compass directions (N, NNE, etc.).
- Atmospheric conditions corresponding to one of the seven atmospheric stability classes discussed in Section B.1. Table B-1 of this appendix displays a portion of an example JFD.

Different JFDs are associated with the different release classifications defined in Section 4.1.4. One JFD is defined for stack releases, and another JFD is defined for ground level releases. Two JFDs are associated with vent (mixed mode) releases, one for the portion of the time the release is treated as elevated and the other for the portion of the time the release is treated as ground level.

B.1.2.1 Downwind Direction Versus Upwind Direction

Unless otherwise noted, any reference to wind direction in this document represents downwind direction, i.e., the direction in which the wind is blowing toward. This is because the parameters developed in this document are used to calculate radioactivity concentration and radiation dose downwind of a release point. In contrast, it is conventional for meteorologists to provide JFDs based on upwind direction, the direction from which the wind is blowing. For example, the JFDs presented in the annual operating reports of the nuclear power stations are obtained from a meteorological contractor and the directions specified in the reports are upwind directions. Users of JFDs should always be careful to ascertain whether the directions specified are upwind or downwind.

B.1.2.2 Stack JFD

For a stack release, the JFD is defined as follows:

$\Sigma f_s(n,\theta,c)$ Joint Frequency Distribution, Stack Release

The fraction of hours during a period of observation that all of the following hold:

- The average wind speed is within wind speed class **n**.
- The downwind direction is within the sector denoted by θ.
- The atmospheric stability class is **c**.

This function is defined for application to a stack release point (see Section 4.1.4). Its value is based on hourly average wind data obtained at a height representative of the release point height.

The stack JFD is normalized to 1:

$$\Sigma f_s(n,\theta,c) = 1 \qquad \text{(B-1)}$$

The summation is over all wind speed classes **n**, all compass direction sectors θ, and all stability classes **c**.

B.1.2.3 Ground Level JFD

For a ground level release, the JFD $f_g(n, \theta, c)$ is defined in the same way as for a stack release except that the wind data are obtained at a height representative of a ground level release point. This height is taken as about 10 meters.

The ground level JFD is normalized to 1:

$$\Sigma f_g(n,\theta,c) = 1 \qquad \text{(B-2)}$$

The summation is over all wind speed classes **n**, all compass direction sectors, and all stability classes **c**.

B.1.2.4 Vent JFDs

In accordance with the approach recommended in Regulatory Guide 1.111 (Reference 7), the plume from a vent release is treated as elevated part of the time and as ground level the rest of the time. Two JFDs are determined:

- $f_{v,elev}(n,\theta,c)$ characterizes the plume during the part of the time that it is considered elevated;
- $f_{v,gnd}(n,\theta,c)$ characterizes the plume during the part of the time that it is considered ground level.

Their definitions are as follows:

$f_{v,elev}(n,\theta,c)$ Joint Frequency Distribution, Elevated Portion of a Vent Release

The fraction of hours during a period of observation that the plume is considered elevated and that all of the following hold:

- The average wind speed is within wind speed class **n**.
- The downwind direction is within the sector denoted by θ.
- The atmospheric stability class is **c**.

$f_{v,gnd}(n,\theta,c)$ Joint Frequency Distribution,
Ground Level Portion of a Vent Release

The fraction of hours during a period of observation that the plume is considered ground level and that all of the following hold:

- The average wind speed is within wind speed class **n**.
- The downwind direction is within the sector denoted by θ.
- The atmospheric stability class is **c**.

The value of $f_{v,elev}(n, \theta,c)$ is based on hourly average wind data at a height representative of the vent release point. Where the measurement height differed considerably from the release height, wind speed data for the release height was obtained by extrapolation. The value of $f_{v,gnd}(n, \theta,c)$ is based on hourly average wind data obtained at a height representative of a ground level release point. This is taken as about 10 meters.

The sum of these two JFDs is normalized to 1:

$$\Sigma\{ f_{v,elev}(n, \theta,c) + f_{v,gnd}(n, \theta,c) \} = 1 \qquad \text{(B-3)}$$

The summation is over all wind speed classes **n**, all compass direction sectors θ, and all stability classes **c**.

The prescription of Regulatory Guide 1.111 is used in determining the fraction of time that the plume is considered elevated and the fraction of time that it is considered ground level. The fractions are obtained from the ratio of stack exit velocity W_o to hourly average wind speed **u** at the height of the vent release point as follows:

- If $W_o/u > 5$, then the plume is considered elevated for the hour.

- If $W_o/u \leq 1$, then the plume is considered ground level for the hour.

- If $1 < W_o/u \leq 5$, the plume is considered to be a ground level release for a fraction G_t of the hour and an elevated release for a fraction $(1 - G_t)$ of the hour where G_t is defined as follows:

$$G_t = 2.58 - 1.58(W_o/u) \quad \text{for } 1.0 < W_o/u \leq 1.5 \qquad \text{(B-4)}$$

$$G_t = 0.30 - 0.06(W_o/u) \quad \text{for } 1.5 < W_o/u \leq 5.0 \qquad \text{(B-5)}$$

B.1.3 Average Wind Speed

Using the joint frequency distribution, average wind speeds are obtained for each station. Values are obtained for each downwind direction (N, NNE, etc.) and for various release point classifications (stack, vent, and ground level).

B.1.3.1 Stack Release

For a stack release, the following formula is used:

$$u_s(\theta) = \Sigma\{ f_s(n, \theta,c)u_n \} / \Sigma\{ f_s(n, \theta,c) \} \quad \text{(B-6)}$$

where the summations are over wind speed classes **n** and stability classes **c**.

$u_s(\theta)$	Average Wind Speed, Stack Release The average wind speed in downwind direction θ for a stack release.	[m/sec]
u_n	Wind Speed for Class **n** A wind speed representative of wind speed class **n**. For each wind speed class except the highest, u_n is the average of the upper and lower limits of the wind speed range for the class. For the highest wind speed class, u_n is the lower limit of the wind speed range for the class.	[m/sec]

The parameter f_s is defined in Section B.1.2.2.

B.1.3.2 Ground Level Release

For a ground level release, the following formula is used:

$$u_g(\theta) = \Sigma\{ f_g(n, \theta,c)u_n \} / \Sigma\{ f_g(n, \theta,c) \} \quad \text{(B-7)}$$

where the summations are over wind speed classes **n** and stability classes **c**.

$u_g(\theta)$	Average Wind Speed, Ground Level Release The average wind speed in downwind direction θ for a ground level release.	[m/sec]

The parameter f_g is defined in Section B.1.2.3.

B.1.3.3 Vent Release

For a vent release, the following formula is used:

$$u_v(\theta) = \Sigma \{ [f_{v,elev}(n, \theta,c) + f_{v,gnd}(n, \theta,c)]u_n \} / \Sigma\{ f_{v,elev}(n,\theta,c) + f_{v,gnd}(n,\theta,c) \} \quad \text{(B-8)}$$

where the summations are over wind speed classes **n** and stability classes **c**.

$u_v(\theta)$	Average Wind Speed, Vent Release The average wind speed in downwind direction θ for a vent release.	[m/sec]

The parameters $f_{v,elev}$ and $f_{v,gnd}$ are defined in Section B.1.2.4.

B.2 GAUSSIAN PLUME MODELS

As a plume of airborne effluents moves away from an elevated release point, the plume both broadens and meanders. It has been found that the time-averaged distribution of material in an effluent plume can be well represented mathematically by a Gaussian function.

B.2.1 Mathematical Representation

In a widely used form of the Gaussian plume model, the distribution of radioactivity in a plume is represented mathematically by the equation below:

$$X(x,y,z) = [Q/(2\pi\ \sigma_y\ \sigma_z u)]\exp(-y^2/2\sigma^2_y) \times \{\exp[-(z-h_e)^2/2\sigma^2_z] + \exp[-(z+h_e)^2/2\sigma^2_z]\} \quad \text{(B-9)}$$

$X(x,y,z)$ Radioactivity Concentration [$\mu Ci/m^3$]

The concentration of radioactivity at point **(x,y,z)**. The **x**, **y**, and **z** axis are defined as follows:

x Downwind Distance [m]

Distance from the stack along an axis parallel to the wind direction.

y Crosswind Distance [m]

Distance from the plume centerline along an axis parallel to the crosswind direction.

z Vertical Distance [m]

Distance from the ground (grade level at the stack) along an axis parallel to the vertical direction.

Q Release Rate [µCi/sec]

Release rate of radioactivity.

σ_y, σ_z Horizontal and Vertical Dispersion Coefficients [m]

Standard deviations of the Gaussian distributions describing the plume cross-sections in the **y** and **z** directions, respectively. The values of σ_y and σ_z depend on several parameters:

- Downwind distance **x**.

  Because a plume broadens and meanders as it travels away from its release point, the values of σ_y and σ_z increase as **x** increases.

- Atmospheric stability class.

  The plume is broadest for extremely unstable atmospheric conditions (Class A) and narrowest for extremely stable conditions (Class G).

- Time period of averaging plume concentration.

The values of σ_y and σ_z increase as the averaging period increases.

u	Average Wind Speed	[m/sec]
	The average wind speed. The average speed of travel of the plume in the **x** direction.	
h_e	Effective Release Height	[m]
	The effective height of effluent release above grade elevation. This may be greater than the actual release height (see Section B.3.1.1.1).	

The two exponential functions of z in the curly brackets of Equation B-9 represent the emitted and reflected components of the plume. The reflected component (represented by the exponential with $(z + h_e)$ in its argument) arises from the assumption that all material in a portion of the plume that touches ground is reflected upward. This assumption is conservative if one is calculating airborne radioactivity concentration.

B.2.2 Sector-Averaged Concentration

Sometimes, it is desired to determine the average concentration of radioactivity in a sector due to release at a constant rate over an extended period of time (e.g., a year). For such a case, it is reasonable to assume that the wind blows with equal likelihood toward all directions within the sector. From Equation B-9, the following equation for ground level radioactivity concentration can be derived:

$$X_{sector} = [2.032\ f\ Q/(\sigma_z\ u\ x)]\exp(-h^2_e/2\sigma^2_z) \qquad \text{(B-10)}$$

X_{sector}	Sector-Averaged Ground Level Concentration	[$\mu Ci/m^3$]
	The time-averaged concentration of airborne radioactivity in a sector at ground level at a distance **x** from the release point.	
2.032	A dimensionless constant.	
f	Sector Fraction	
	The fraction of time that the wind blows into the sector.	
Q	Release rate of radioactivity.	[µCi/sec]

The other parameter definitions are the same as for Equation B-9.

B.3 RELATIVE CONCENTRATION FACTOR X/Q

The relative concentration factor X/Q (called "chi over Q") provides a simple way of calculating the radioactivity concentration at a given point in an effluent plume when the release rate is known:

$$X = Q\,(X/Q) \qquad \text{(B-11)}$$

X	Concentration of Radioactivity Concentration of radioactivity at point **(x,y,z)** in the atmosphere.	[$\mu Ci/m^3$]
Q	Release Rate	[µCi/sec]

Release rate of radioactivity.

X/Q	Relative Concentration Factor Relative concentration factor for point (x,y,z). The airborne radioactivity concentration at (x,y,z) per unit release rate.	[sec/m^3]

Expressions for X/Q based on Gaussian plume models can be obtained from the equations for concentration X in Section B.2 simply by dividing both sides of each equation by the release rate Q. For example, from Equation B-10, we obtain the following expression for the sector-averaged X/Q:

$$(X_{sector}/Q) = [2.032\ f/(\sigma_z\ u\ x)]\exp(-h^2_e/2\sigma^2_z) \qquad \text{(B-12)}$$

The values of X/Q used in ODCM calculations are both sector-averaged and time-averaged. The time averaging is based on the historical average atmospheric conditions of a specified multi-year time period (see Section 4.1.5) and is accomplished by use of the joint frequency distribution discussed in Section B.1.2. The formulas used to obtain the time- and sector-averaged X/Q are based on Equation B-12, but vary depending on whether the release is a stack, ground level, or vent release. The three cases are discussed below.

B.3.1 Stack Release

For a stack release, the relative concentration factor is designated $(X/Q)_S$. Its value is obtained by the following formula:

$$(X/Q)_S = (2.032/R)\ \Sigma\{\ f_S(n,\theta,c)\ x\ [\exp\ (-h^2_e/2\sigma^2z)]/(u_n\ \sigma_z)\ \} \qquad \text{(B-13)}$$

The summation is over wind speed classes **n** and atmospheric stability classes **c**.

$(X/Q)_S$	Relative Concentration Factor, Stack Release The time- and sector-averaged relative concentration factor due to a stack release for a point at ground level at distance R in downwind direction θ.	[sec/m^3]
2.032	Constant A dimensionless constant.	
R	Downwind Distance The downwind distance from the release point to the point of interest.	[m]
$f_S(n,\theta,c)$	Joint Frequency Distribution, Stack Release This function is defined in Section B.1.2.2.	
h_e	Effective Release Height The effective height of an effluent release above grade elevation. For a stack release, h_e is obtained by correcting the actual height of the release point for plume rise, terrain effects, and downwash as described in Section B.3.1.1, below.	[m]

σ_z	Standard Vertical Dispersion Coefficient	[m]
	A coefficient characterizing vertical plume spread in the Gaussian model for stability class **c** at distance **R** (see Table C-5 of Appendix C).	
u_n	Wind Speed	[m/sec]
	A wind speed representative of wind speed class **n**. For each wind speed class except the highest, u_n is the average of the upper and lower limits of the wind speed range for the class. For the highest wind speed class, u_n is the lower limit of the wind speed range for the class.	

This expression is recommended by the NRC in Regulatory Guide 1.111 (Reference 7) and is based on a model designated there as the "constant mean wind direction model." In this model it is assumed that the mean wind speed, the mean wind direction, and the atmospheric stability class determined at the release point also apply at all points within the region in which airborne concentration is being evaluated.

B.3.1.1 Effective Release Height

For a stack release, the effective height of an effluent plume is the height of the release point corrected for plume rise and terrain effects:

If $(h_s + h_{pr} - h_t) < 100$ meters, then

$$h_e = h_s + h_{pr} - h_t \quad \text{(B-14)}$$

If $(h_s + h_{pr} - h_t) \geq 100$ meters, then;

$$h_e = 100 \text{ meters} \quad \text{(B-15)}$$

h_e	Effective Release Height	[m]
	The effective height of an effluent release above grade elevation.	
h_s	Actual Release Height	[m]
	The actual height of the release above grade elevation.	
h_{pr}	Plume Rise	[m]
	The rise of the plume due to its momentum and buoyancy. (See Section B.3.1.1.1.)	
h_t	Terrain Correction Parameter	[m]
	A parameter to account for the effect of terrain elevation on the effective height of a plume. Taken as zero (see Section B.3.1.1.2).	

B.3.1.1.1 Plume Rise

Because nuclear power stations generally have plumes that are not significantly warmer than room temperature, plume rise due to buoyancy is neglected. The formulas used to calculate plume rise due to momentum are given below.

Stability Classes A, B, C, and D

For these stability classes (corresponding to unstable and neutral conditions), h_{pr} is taken as the lesser of two quantities:

$$h_{pr} = \text{Minimum of } [(h_{pr})_1, (h_{pr})_2] \quad \text{(B-16)}$$

$$(h_{pr})_1 = (1.44)(W_o/u)^{2/3}(R/d)^{1/3}(d) - h_d \quad \text{(B-17)}$$

$$(h_{pr})_2 = (3)(W_o/u)(d) \quad \text{(B-18)}$$

W_o	Stack Exit Velocity	[m/sec]
	The effluent stream velocity at the discharge point.	
u	Wind Speed	[m/sec]
R	Downwind Distance	[m]
	The downwind distance from the release point to the point of interest.	
d	Internal Stack Diameter	[m]
	The internal diameter of the stack from which the effluent is released.	
h_d	Downwash Correction	[m]
	A parameter to account for downwash at low exit velocities.	
	The parameter h_d is calculated by the following equations:	

$$h_d = (3)(1.5 - W_o/u)(d) \text{ if } W_o < 1.5u \quad \text{(B-19)}$$

$$h_d = 0 \text{ if } W_o \geq 1.5u \quad \text{(B-20)}$$

Note that $(h_{pr})_1$ can increase without limit as R increases; thus, the effect of $(h_{pr})_2$ is to limit calculated plume rise at large distances from the nuclear power station.

Stability Classes E, F, and G

For these stability classes (corresponding to stable conditions), h_{pr} is taken as the minimum of four quantities:

$$h_{pr} = \text{Minimum of } [(h_{pr})_1, (h_{pr})_2, (h_{pr})_3, (h_{pr})_4] \quad \text{(B-21)}$$

$$(h_{pr})_3 = (4)(F/S)^{1/4} \quad \text{(B-22)}$$

$$(h_{pr})_4 = (1.5)(F/u)^{1/3}(S)^{-1/6} \quad \text{(B-23)}$$

F	Momentum Flux Parameter	$[m^4/sec^2]$
	A parameter defined as: $F = W_o^2(d/2)^2$ (B-24)	

S	Stability Parameter	[1/sec^2]

A parameter defined as follows:

Stability Class	S
E	8.70E-4
F	1.75E-3
G	2.45E-3

The quantities $(h_{pr})_1$ and $(h_{pr})_2$ are as defined by Equations B-17 and B-18.

B.3.1.1.2 Terrain Effects

Due to general flatness of the terrain in the vicinity of the stations, the terrain correction parameter h_t was taken as zero in all calculations of meteorological dispersion and dose parameters for this Manual.

B.3.2 Ground Level Release

For a ground level release, the relative concentration factor is designated $(X/Q)_g$. Its value is obtained by the following formula:

$$(X/Q)_g = (2.032/R)\,\Sigma\{ f_g(n,\theta,c)/(u_n S_z) \} \qquad \text{(B-25)}$$

The summation is over wind speed classes **n** and atmospheric stability classes **c**.

$(X/Q)_g$	Relative Concentration Factor, Ground Level Release	[sec/m^3]
	The time- and sector-averaged relative concentration factor due to a ground level release for a point at ground level at distance **R** in downwind direction θ.	
$f_g(n,\theta,c)$	Joint Frequency Distribution, Ground Level Release	
	This function is defined in Section B.1.2.3.	
S_z	Wake-Corrected Vertical Dispersion Coefficient	[m]
	The vertical dispersion coefficient corrected for building wake effects. The correction is made as described below.	

The remaining parameters are defined in Section B.3.1.

Wake-Corrected Vertical Dispersion Coefficient

The wake-corrected vertical dispersion coefficient S_z in Equation B-25 is taken as the lesser of two quantities:

$$S_z = \text{Minimum of } [(S_z)_1, (S_z)_2] \qquad \text{(B-26)}$$

$$(S_Z)_1 = [\sigma^2_Z + D^2/(2\pi)]^{1/2} \quad \text{(B-27)}$$

$$(S_Z)_2 = (\sigma_Z)(3^{1/2}) \quad \text{(B-28)}$$

S_Z Wake-Corrected Vertical Dispersion Coefficient [m]

The vertical dispersion coefficient corrected for building wake effects.

σ_Z Standard Vertical Dispersion Coefficient [m]

The coefficient characterizing vertical plume spread in the Gaussian model for stability class **c** at distance **R** (see Table C-5 of Appendix C).

D Maximum Height of Neighboring Structure [m]

The maximum height of any neighboring structure causing building wake effects (see Table F-2 of Appendix F).

B.3.3 Vent Release

For a vent release, the relative concentration factor is designated $(X/Q)_V$. Its value is obtained by the following formula:

$$(X/Q)_V = (2.032/R)\,\Sigma\{\, f_{V,elev}(n,\theta,c) \times [\exp(-h^2_e/2\sigma^2_Z)]/(u_n\,\sigma_Z) + f_{V,gnd}(n,\theta,c)/(u_n S_Z)\,\} \quad \text{(B-29)}$$

The summation is over wind speed classes **n** and atmospheric stability classes **c**.

$(X/Q)_V$ Relative Concentration Factor, Vent Release [sec/m^3]

The time and sector averaged relative concentration factor due to a vent release for a point at ground level at distance **R** in downwind direction θ.

The parameters $f_{V,elev}(n,\theta,c)$ and $f_{V,gnd}(n,\theta,c)$ are defined in Section B.1.2.4. The parameter S_Z is defined in Section B.3.2. The remaining parameters are defined in Section B.3.1.

B.3.4 Removal Mechanisms

In Regulatory Guide 1.111, the NRC allows various removal mechanisms to be considered in evaluating the radiological impact of airborne effluents. These include radioactive decay, dry deposition, wet deposition, and deposition over water. Radiological decay is taken into account in the equations of this manual which use X/Q (see Appendix A).

For simplicity, the other removal mechanisms cited by the NRC are not accounted for in the evaluation or use of X/Q in this manual. This represents a conservative approximation as ignoring removal mechanisms increases the value of X/Q.

B.4 RELATIVE DEPOSITION FACTOR D/Q

The quantity D/Q (called "D over Q") is defined to provide the following simple way of calculating the rate of deposition of radioactivity at a given point on the ground when the release rate is known.

$$d = Q\,(D/Q) \qquad \text{(B-30)}$$

d	Deposition Rate	[(μCi/m^2)/sec]
	Rate of deposition of radioactivity at a specified point on the ground.	
Q	Release Rate of radioactivity.	[μCi/sec]
D/Q	Relative Deposition Factor	[1/m^2]
	Relative deposition factor for a specified point on the ground. The deposition rate per unit release rate.	

The values of D/Q used in this manual are time-averaged. The time averaging is based on the historical average atmospheric conditions of a specified multi-year time period (see Section 4.1.5) and is accomplished by use of the joint frequency distribution described in Section B.1.2. The formulas used to obtain D/Q vary depending on whether the release is a stack, ground level, or vent release. The three cases are discussed below.

B.4.1 Stack Release

For a stack release, the relative deposition factor is designated $(D/Q)_S$. Its value is obtained by the following formula:

$$(D/Q)_S = [1/(2\pi R/16)]\,\Sigma\{f_S(n,\theta,c)\,D_r(c,R,h_e)\} \qquad \text{(B-31)}$$

The summation is over wind speed classes n and stability classes c.

$(D/Q)_S$	Relative Deposition Factor, Stack Release	[1/m^2]
	The time-averaged relative deposition factor due to a stack release for a point at distance R in the direction θ.	
$2\pi/16$	Sector Width	[radians]
	The width of a sector over which the plume direction is assumed to be uniformly distributed (as in the model of Section B.2.2). Taken as 1/16 of a circle.	
R	Downwind Distance	[m]
	The downwind distance from the release point to the point of interest.	
$f_S(n,\theta,c)$	Joint Frequency Distribution, Stack Release	
	This function is defined in Section B.1.2.2.	
$D_r(c,R,h_e)$	Relative Deposition Rate, Stack Release	[m^{-1}]
	The deposition rate per unit downwind distance [μCi/(sec-m)] divided by the source strength [μCi/sec] due to a stack release for stability class c, downwind distance R, and effective release height h_e.	

The value is based on Figures 7 to 9 of Regulatory Guide 1.111, which apply, respectively, to release heights of 30, 60, and 100 m. Linear interpolation is used to obtain values at intermediate release heights. If the effective release height is greater than 100 meters, then the data for 100 meters are used.

h_e	Effective Release Height	[m]

The effective height of the release above grade elevation. See Section B.3.1.1.

B.4.2 Ground Level Release

For ground level release, the relative deposition factor is designated $(D/Q)_g$. Its value is obtained by the following formula:

$$(D/Q)_g = [1/(2\pi R/16)]\, D_r(R)\ \Sigma\{ f_g(n,\theta,c) \} \qquad \text{(B-32)}$$

The summation is over wind speed classes **n** and stability classes **c**.

$(D/Q)_g$	Relative Deposition Factor, Ground Level Release	[$1/m^2$]

The time-averaged relative deposition factor due to a ground level release for a point at distance **R** in the direction θ.

$f_g(n,\theta,c)$	Joint Frequency Distribution, Ground Level Release	

This function is defined in Section B.1.2.3.

$D_r(R)$	Relative Deposition Rate, Ground Level	[m^{-1}]

The deposition rate per unit downwind distance [μCi/(sec-m)] divided by the source strength [μCi/sec] due to a ground level release for downwind distance **R**. The value is taken from Figure 6 of Regulatory Guide 1.111 and is the same for all atmospheric stability classes.

The remaining parameters are defined in Section B.4.1.

B.4.3 Vent Release

For a vent release, the relative deposition factor is designated $(D/Q)_v$. Its value is obtained by the following formula:

$$(D/Q)_v = [1/(2\pi R/16)] \times [\Sigma\{ f_{v,elev}(n,\theta,c)\, D_r(c,R,h_e) \} + D_r(R)\ \Sigma\{ f_{v,gnd}(n,\theta,c) \}] \qquad \text{(B-33)}$$

The summation is over wind speed classes **n** and stability classes **c**.

$(D/Q)_v$	Relative Deposition Factor, Vent Release	[$1/m^2$]

The time-averaged relative deposition factor due to a ground level release for a point at distance **R** in the direction θ.

The parameters $f_{v,elev}(n,\theta,c)$ and $f_{v,gnd}(n,\theta,c)$ are defined in Section B.1.2.4. The remaining parameters are defined in Sections B.4.1 and B.4.2.

B.5 GAMMA AIR DOSE FACTORS (S_i, V_i, G_i)

The gamma air dose factors provide a simple way of calculating doses and dose rates to air due to gamma radiation. For example, using a dose factor DF_i, gamma air dose rate may be calculated as follows:

$$\dot{D} = \Sigma \dot{D}_i \qquad \text{(B-34)}$$

$$\dot{D}_i = \Sigma\{Q_i DF_i\} \qquad \text{(B-35)}$$

The summations are over i radionuclides.

$\dot{D}$	Gamma Air Dose Rate The gamma air dose rate due to all radionuclides released.	[mrad/yr]
$\dot{D}_i$	Gamma Air Dose Rate Due to Radionuclide i	[mrad/yr]
Q_i	Release Rate of Radionuclide i	[μCi/sec]
DF_i	Gamma Air Dose Factor for Radionuclide i A factor used to calculate gamma air dose or dose rate due to release of radionuclide i. Gamma air dose rate at a particular location per unit release rate.	[(mrad/yr)/(μCi/sec)]

Three gamma air dose factors are defined: S_i, V_i, and G_i. They are used for stack, vent, and ground level releases, respectively. These three release point classifications are defined in Section 4.1.4. The calculation of the three dose factors is discussed below.

B.5.1 Stack Release

For a stack release, the gamma air dose factor S_i is obtained by a model similar to that of Equation 6 of Regulatory Guide 1.109 (Reference 6). A sector-averaged Gaussian plume is assumed and the dose factor is evaluated on the basis of historical average atmospheric conditions. The value of S_i depends on distance R from the release point and on downwind sector θ.

The following equation is used:

$$S_i = [260/(2\pi R/16)] \times \Sigma\{f_s(n,\theta,c)[\exp(-\lambda_i R/3600u_n)] \times E_k \mu_a(E_k) A_{KI} I(h_e,u_n,c,\sigma_z,E_k)/u_n\} \qquad \text{(B-36)}$$

The summation is over wind speed classes n, atmospheric stability classes c, and photon group indices k.

S_i	Gamma Air Dose Factor, Stack Release The gamma air dose factor at ground level for a stack release for radionuclide i, downwind sector θ, downwind distance R from the release point, and the average atmospheric conditions of a specified historical time period.	[(mrad/yr)/(μCi/sec)]

260 Conversion factor [(mrad-radians-m^3-disintegrations)/(sec-MeV-Ci)]

Reconciles units of Equation B-36.

$2\pi/16$ Sector Width [radians]

The width of a sector over which the plume direction is assumed to be uniformly distributed (as in the model of Section B.2.2). Taken as 1/16 of a circle.

$f_s(n,\theta,c)$ Joint Frequency Distribution, Stack Release

This function is defined in Section B.1.2.2.

λ_i Radiological Decay Constant [hr^{-1}]

Radiological Decay Constant for radionuclide **i** (see Table C-7 of Appendix C).

3600 Conversion Factor [sec/hr]

The number of seconds per hour. Used to convert wind speed in meters/sec to meters/hr.

E_k Photon Group Energy [MeV/photon]

An energy representative of photon energy group **k**. The photons emitted by each radionuclide are grouped into energy groups in order to facilitate analysis. All photons with energy in energy group **k** are assumed to have energy E_k.

$\mu_a(E_k)$ Air Energy Absorption Coefficient [m^{-1}]

The linear energy absorption coefficient for air for photon energy group **k**. The fraction of energy absorbed in air per unit of distance traveled for a beam of photons of energy E_k. Distance is measured in units of linear thickness (meters).

A_{kl} Effective Photon Yield [photons per disintegration]

The effective number of photons emitted with energy in energy group **k** per decay of nuclide **i**. On the basis of Section B.1 of Regulatory Guide 1.109 (Reference 6), the parameter A_{kl} is calculated as follows:

$$A_{kl} = [\Sigma\{A_m E_m \mu_a(E_m)\}]/[E_k \mu_a(E_k)] \quad \text{(B-37)}$$

The summation in the numerator is over the index **m**.

A_m True Photon Yield [photons per disintegration]

The actual number of photons emitted with energy E_m per decay of nuclide **i**.

E_m Photon Energy [MeV/photon]

The energy of the mth photon within photon energy group **k**.

$\mu_a(E_m)$	Air Energy Absorption Coefficient	$[m^{-1}]$
	The linear energy absorption coefficient for air for photon energy E_m.	
I(...)	I Function	
	A dimensionless parameter obtained by numerical evaluation of integrals that arise in the plume gamma dose problem. The value of I depends on the arguments (...) listed in Equation B-36. A specific definition for I is given by Equation F-13 of Regulatory Guide 1.109.	
	The integrals involved in calculating I arise from conceptually dividing up the radioactive plume into small elements of radioactivity and adding up the doses produced at the point of interest by all of the small elements. The distribution of radioactivity in the plume is represented by a sector-averaged Gaussian plume model like that discussed in Section B.2.2.	

The parameters R, h_e, u_n, and σ_z are defined in Section B.3.1.

B.5.2 Ground Level Release

The gamma air dose factor G_i for a ground level release is defined as follows:

G_i	Gamma Air Dose Factor, Ground Level Release	[(mrad/yr)/(μCi/sec)]
	The gamma air dose factor at ground level for a ground level release for radionuclide i, downwind sector θ, downwind distance R from the release point, and the average atmospheric conditions of a specified historical time period.	

The value of G_i is obtained by the same equation as used for a stack release, Equation B-36 of Section B.5.1, with the following modifications:

- The joint frequency distribution for a ground level release (f_g of Section B.1.2.3) is used in place of the one for a stack release (f_s).
- In evaluating the I function, the effective release height h_e is taken as zero.

This corresponds to use of a finite plume model. This approach differs from that of Regulatory Guide 1.109 in that the regulatory guide has a uniform semi-infinite cloud model to determine dose factors for a ground level release. The approach used here is more realistic than that in the regulatory guide.

B.5.3 Vent Release

For a vent release, the gamma air dose factor is calculated as follows:

$$V_i = [260/(2\pi R/16)] \times \Sigma\{f_{v,elev}(n,\theta,c)[\exp(-\lambda_i R/3600u_n)] \times A_{ki}E_k\mu_a(E_k)\, I(h_e,u_n,c,\sigma_z,E_k)/u_n + f_{v,gnd}(n,\theta,c)[\exp(-\lambda_i R/3600u_n)] \times A_{ki}E_k\mu_a(E_k)\, I(0,u_n,c,\sigma_z,E_k)/u_n\} \quad \text{(B-38)}$$

The summation is over wind speed classes n, atmospheric stability classes c, and photon group indices k.

V_i	Gamma Air Dose Factor, Vent Release	[(mrad/yr)/(μCi/sec)]

The gamma air dose factor at ground level for a vent release for radionuclide i, downwind sector θ, downwind distance R from the release point, and the average atmospheric conditions of a specified historical time period.

The parameters $f_{v,elev}(n,\theta,c)$ and $f_{v,gnd}(n,\theta,c)$ are defined in Section B.1.2.4. The parameter S_z is defined in Section B.3.2. The remaining parameters are discussed in Section B.5.1.

B.6 WHOLE BODY DOSE FACTORS ($\bar{S}_i$, $\bar{V}_i$, $\bar{G}_i$)

The whole body dose factors provide a simple way of calculating doses and dose rates due to gamma irradiation of the whole body. They are similar to the gamma air dose factors (see the discussion at the beginning of Section B.5). The whole body dose factors are defined for stack, vent, and ground level releases, respectively.

B.6.1 Stack Release

To obtain the whole body dose factor for a stack release, Equation B-36 is modified to account for the attenuation of gamma radiation by 1 cm of tissue with a density of 1 g/m^3. The following expression results:

$$\bar{S}_i = [260/(2\pi R/16)] \times \Sigma\{ f_S(n,\theta,c)[\exp(-\lambda_i R/3600 u_n)] \times A_{ki} E_k \mu_a(E_k) I(h_e,u_n,c,\sigma_z,E_k) \times [1/u_n]\exp[-\mu^T_a(E_k) t_d] \} \quad \text{(B-39)}$$

The summation is over wind speed classes **n**, atmospheric stability classes **c**, and photon group indices **k**. The change is the addition of the factor $\exp[-\mu^T_a(E_k)\, t_d]$.

All of the parameters are discussed in Section B.5.1 except the following:

$\bar{S}_i$ — Whole Body Gamma Dose Factor, Stack Release — [(mrad/yr)/(μCi/sec)]

The whole body gamma dose factor at ground level for a stack release for radionuclide i, downwind sector θ, downwind distance R from the release point, and the average atmospheric conditions of a specified historical time period.

$\mu^T(E_k)$ — Tissue Energy Absorption Coefficient — [cm^2/g]

The mass energy absorption coefficient for tissue for photon energy group k. The fraction of energy absorbed in tissue per unit distance of travel for a beam of photons of energy E_k with distance measured in units of density thickness (g/cm^2).

t_d — Tissue Thickness — [g/cm^2]

An assumed value of tissue thickness used in calculating whole body dose. Taken as 1 g/cm^2 to represent 1 cm of tissue with a density of 1 g/cm^3. Accounts for the shielding of the inner more radiosensitive parts of the body by the outer body parts.

B.6.2 Ground Level Release

The whole body dose factor $\bar{G}_i$ for a ground level release is defined as follows:

$\bar{G}_i$ — Whole Body Gamma Dose Factor, Ground Level Release — **[(mrad/yr)/(μCi/sec)]**

The whole body gamma dose factor at ground level for a ground level release for radionuclide i, downwind sector θ, downwind distance R from the release point, and the average atmospheric conditions of a specified historical time period.

The equation for $\bar{G}_i$ is obtained from the equation for $\bar{S}_i$, Equation B-39 of Section B.6.1, by making the two modifications specified in Section B.5.2.

B.6.3 Vent Release

To obtain the whole body dose factor for a vent release, Equation B-38 is modified to account for the attenuation of gamma radiation by 1 cm of tissue with a density of 1 g/cm^3. The following expression results:

$$\bar{V}_i = [260/(2\pi R/16)] \times \Sigma\{ [A_{ki} E_k \mu_a(E_k)/u_n]\exp[-\mu^T_a(E_k) t_d] \quad \text{(B-40)}$$
$$\times [\exp(-\lambda_i R/3600u_n)] \times [f_{v,elev}(n,\theta,c)I(h_e,u_n,c,\sigma_z,E_k) + f_{v,gnd}(n,\theta,c)I(0,u_n,c,\sigma_z,E_k)] \}$$

The summation is over wind speed classes **n**, atmospheric stability classes **c**, and photon group indices **k**.

$\bar{V}_i$ Whole Body Gamma Dose Factor, Vent Release [(mrad/yr)/(μCi/sec)]

The whole body gamma dose factor at ground level for a vent release for radionuclide i, downwind sector θ, downwind distance R from the release point, and the average atmospheric conditions of a specified historical time period.

The parameters $\mu^T_a(E_k)$ and t_d are defined in Section B.6.1. The other parameters are discussed in Section B.5.3.

B.7 BETA AIR AND SKIN DOSE FACTORS (L_i,$\bar{L}_i$)

The dose factors L_i and $\bar{L}_i$ provide a simple way of calculating beta air and skin doses and dose rates, just as the gamma air dose factors do (see the discussion at the beginning of Section B.5). Their definitions are as follows:

- L_i, discussed in Section A.1.2.2 of Appendix A, is used to calculate beta air dose due to noble gas radionuclide i and has the following units:

  (mrad/yr) per (μCi/ m^3)

- $\bar{L}_i$, discussed in Section A.1.2.4 of Appendix A, is used to calculate beta skin dose and dose rate due to noble gas radionuclide i and has the following units:

  (mrem/yr) per (μCi/m^3)

The values used in this manual for L_i and $\bar{L}_i$ are specified in Table C-9 of Appendix C and are taken from Regulatory Guide 1.109. The values are based on a semi-infinite cloud model.

B.8 GROUND PLANE DOSE CONVERSION FACTOR DFG_i

The ground plane dose conversion factor DFG_i is used to calculate dose due to standing on ground contaminated with radionuclide i (see Equation A-14 of Appendix A). The units of DFG_i are (mrem/hr) per (pCi/ m^2).

Values are provided (see Table C-10 of Appendix C) for dose to the whole body. The values are taken from Regulatory Guide 1.109 and are based on a model that assumes a uniformly contaminated ground plane.

B.9 INHALATION DOSE COMMITMENT FACTOR DFA_{ija}

The inhalation dose commitment factor DFA_{ija} is used to calculate dose and dose rate to organ j of an individual of age group a due to inhalation of radionuclide i (see Equations A-17 and A-28 of Appendix A).

Values of DFA_{ija} for 10CFR50 compliance are taken from Regulatory Guide 1.109 (Reference 6). The units of DFA_{ija} are (mrem) per (pCi inhaled). Values are provided for seven organs, with the whole body considered as an organ (see Tables E-7, E-8, E-9 and E-10 in Reg. Guide 1.109).

Values of DFA_{ija} used for 10CFR20 compliance assessments are taken from Table 2.1 of reference 93. Evaluations are made for the adult only. The units of DFA_{ija} are (Sv) per (Bq) inhaled.

B.10 INGESTION DOSE COMMITMENT FACTOR DFA_{ija}

The ingestion dose commitment factor DFA_{ija} is used to calculate dose to organ j of an individual of age group a due to ingestion of radionuclide i (see Equation A-18 of Appendix A).

Values of DFA_{ija} for 10CFR50 compliance are taken from Regulatory Guide 1.109 (Reference 6). The units of DFA_{ija} are mrem per pCi ingested. In Tables E-11, E-12, E-13 and E-14 of Reg. Guide 1.109, values are provided for seven organs, with the whole body considered as an organ.

Values of DFA_{ija} used for 10CFR20 compliance assessments are taken from Table 2.2 of reference 93. Evaluations are for the adult only. The units of DFA_{ija} are Sv per Bq ingested.

B.11 MEASURED RELEASE PARAMETERS

Input parameters required for calculations of dose or dose rate due to airborne effluents include measured values of radioactivity release (A_{is}, A_{iv}, and A_{ig}) or release rate (Q_{is}, Q_{iv}, and Q_{ig}) (see Section A.1 of Appendix A). These are obtained per the nuclear power station procedures.

B.12 RADIOLOGICAL DECAY CONSTANTS

Values used for these are obtained from the literature and are specified in Table C-7 of Appendix C.

B.13 PRODUCTION/EXPOSURE PARAMETERS

These parameters characterize various aspects of agricultural production and human exposure. Values used for generic (site-independent) parameters are specified in Appendix C.

Values of site-specific parameters are given in Appendix F. Many of the values are based on Reg. Guide 1.109, while others are based on site-specific considerations.

SECTION 2:

MODELS AND PARAMETERS FOR LIQUID EFFLUENT CALCULATIONS

B.14 INTRODUCTION

Equations for radiation dose and radioactivity concentration due to liquid effluents are given in Section A.2 of Appendix A. The equations involve the following types of parameters:

- Flow and Dilution Parameters.
- Dose Factors.
- Measured Release Parameters.
- Radiological Decay Constants.
- Transport/Consumption Parameters.

This section discusses the methodology used to determine these parameters. Section B.15 addresses dose calculations and Section B.16 addresses concentration calculations for tank discharges. For dose calculations, flow and dilution parameters are discussed for two different models; the River Model, which is used for all nuclear power stations except Zion, and the Lake Michigan Model, which is used for Zion.

B.15 DOSE

B.15.1 Drinking Water

The radiation dose due to consumption of drinking water containing released radioactivity is calculated by Equation A-30 of Appendix A:

$$D_j^{WATER} = (1.1E\text{-}3)(8760)(U^W_a M^W/F^W) \times \Sigma\{ A_i DFI_{ija} \exp(-\lambda_i t_w)\} \qquad \text{(A-30)}$$

The summation is over index i (radionuclides) and the parameters are defined in Section A.2.1 of Appendix A.

This equation can be understood as arising from the following model:

- Release of an amount **A** of radioactivity over a time period **T** at a uniform rate **A/T** into a stream flowing at a constant rate **F**. [The resulting radioactivity concentration in the flowing stream is **(A/T)/F**.]
- A fraction of full river flow in which dilution (mixing) occurs is represented by **1/M** (with $1/M \leq 1$).
- The radioactivity decays for a time **t** with decay constant λ.
- Water containing the diluted radioactivity is then consumed at constant rate **U** for a time period **T**.
- The dose commitment per unit of ingested radioactivity is **DFI**.

This model leads to the following equation for dose commitment:

$$D = [(A/T)/F]\ (M)\ [\exp(-\lambda t)]\ (UT)\ DFI \qquad \text{(B-41)}$$
$$D = U\ (M/F)\ A\ DFI\ \exp(-\lambda t) \qquad \text{(B-42)}$$

Any set of consistent units can be used for the above parameters. For example, the following would be suitable:

A	Released Radioactivity	[pCi]
T	Period of Release and Consumption	[hr]
F	Dilution Stream Flow Rate	[L/hr]
1/M	Additional Dilution Factor	[dimensionless]

λ	Decay Constant	[hr^{-1}]
t	Decay Period	[hr]
U	Consumption Rate	[L/hr]
DFI	Ingestion Dose Commitment Factor	[mrem/pCi]
D	Dose Commitment	[mrem]

In Equation A-30 of Appendix A, units different from the above have been chosen for A and F:

A	Released Radioactivity	[µCi]
F	Dilution Stream Flow Rate	[cfs]

With the modified units, Equation B-42 takes the following form:

$$D = KU\,(M/F)\,A\,DFI\,\exp(-\lambda t) \qquad \text{(B-43)}$$

where K is a units conversion factor which is expressed as follows:

$$K = [1.1E\text{-}3\ (pCi/L)(ft^3/sec)/(\mu Ci/yr)] \times [8760\ hr/yr] \qquad \text{(B-44)}$$

B.15.2 Aquatic Foods (Fish)

Near the nuclear power stations, the only aquatic food of significance for human consumption is fish. The radiation dose due to consumption of fish containing released radioactivity is calculated by Equation A-31 of Appendix A:

$$D^{Fish}_{ja} = (1.1E\text{-}3)\,(8760)\,(U^f_a M^f / F^f) \times \Sigma\{A_i B_i DFI_{ija} \exp(-\lambda_i t^f)\} \qquad \text{(A-31)}$$

The summation is over radionuclides i, and the parameters are defined in Section A.2.1 of Appendix A.

The form of this equation is like that used for calculating the dose due to drinking water except for the addition of the bioaccumulation factor, B_i. This factor is the equilibrium ratio of the concentration of radionuclide I in fish (pCi/kg) to its concentration in water (pCi/L). It accounts for the fact that radioactivity ingested by fish can accumulate in their bodies to a higher concentration than in the waters in which the fish live.

B.15.3 Parameters

B.15.3.1 Flow, Dilution, and Transport Time

The values of dilution flow rate F, dilution factor 1/M, and decay period t can differ for water and fish. The dilution and decay parameters for water will depend on where water is drawn, while those for fish will depend on where the fish are caught. Models used to determine these parameters are discussed below. The values used for each station are summarized in Table F-1 of Appendix F.

B.15.3.1.1 River Model

For the purpose of calculating the drinking water dose from liquid effluents discharged into a river, it is assumed that total mixing of the discharge in the river flow (F^w) occurs prior to consumption. The measure of dilution used is the parameter $1/M^w$ and may be thought of as the fraction of full river flow in which dilution occurs. $1/M^w = 1$ represents full dilution, $1/M^w$ less than 1 represents dilution in only a portion of the river.

The river flow is taken as the long-term average (generally 10 years). The time period for decay is based on the flow time to the nearest potable water intake on the receiving body of water. This location is described in a footnote to Table F-1 of Appendix F.

For the fish consumption pathway, a near-field dilution flow (F^f) is used. This is an estimate of the dilution of released radioactivity in the water consumed by fish caught near the station downstream of its discharge. No additional dilution is assumed to occur. The decay time between release of radioactivity and its consumption in fish is taken as 24 hours.

B.15.3.1.2 Lake Michigan Model

Only (Zion) discharges liquid effluents into Lake Michigan. For this nuclear power station, it is assumed that the concentration of radioactivity is diluted initially in the condenser cooling water flow (F^c) and then by an additional factor of 60 prior to consumption as potable water (ie; $F^W = F^c / 60$). The dilution factor of 60 is the product of the following:

- Initial entrainment dilution (factor of 10).
- Plume dilution (factor of 3 over approximately 1 mile).
- Current direction frequency (annual average factor of 2).

For the fish ingestion pathway only, it is assumed that radioactivity is diluted in a hypothetical river of flow F^f with dilution $1/M^f = 1.0$. To determine F^f, it was assumed that the near shore lake current constitutes a "river" with the following characteristics:

- Width of 5 miles (based on the observed width of the lake current varying from 2 to 10 miles).
- Depth of 50 feet (the average lake depth from shore out to 5 miles near Zion).
- Flow rate of 0.2 miles per hour (the measured, offshore average value).

This results in F^f = 4E5 cfs. The decay time between release of radioactivity and its consumption in fish is taken as 24 hours.

B.15.3.2 Dose Factors

Equations A-30 and A-31 of Appendix A determine dose due to ingested radioactivity using the same ingestion dose factor DFI_{ija} as used in the evaluation of airborne radioactivity which is ingested with foods. The units of DFI_{ija} are:

(mrem) per (pCi ingested)

For 10CFR50 Appendix I compliance, the data of Tables E-1, E-12, E-13 and E-14 of Reg. Guide 1.109, are used for four age groups and for seven organs, with the whole body considered as an organ.

For 10CFR20 compliance, the data of Federal Guidance Report 11 (Reference 93) are used. Data are provided for an adult only, and all organs. Note these data have units of Sieverts per Becquerel ingested and must be multiplied by 3.7×10^9 to convert to units of (mrem) per (μCi ingested).

B.15.3.3 Measured Releases

Calculations of dose due to liquid effluents require measured values of radioactivity release (A_i) for input. These release values are obtained per the nuclear power station procedures.

B.15.3.4 Radiological Decay

Values used for these constants are obtained from the literature and are listed in Table C-7 of Appendix C.

B.15.3.5 Consumption

Equations A-30 and A-31 of Appendix A involve consumption rates for water and fish (U^w_a and U^f_a). The values used are specified for each nuclear power station in Table F-1 of Appendix F.

B.16 CONCENTRATION IN TANK DISCHARGES

The concentration of radioactivity in a release to the unrestricted area due to a tank discharge is calculated by Equation A-33 of Appendix A:

$$C_i = (C^t_i)(F^r)/(F^d + F^r) \qquad \text{(A-33)}$$

The parameters are defined in Section A.2.3 of Appendix A.

The radioactivity concentration released from the tank (C^t_i at flow rate F^r) is diluted by mixing with the initial dilution stream (with flow rate F^d) to yield a lower concentration (C_i) in the combined streams.

Table B-1

Portion of an Example Joint Frequency Distribution

Summary Table of Percent by Direction and Class

Class	N	NNE	NE	ENE	E	ESE	SE	SSE	S
A	.289	.317	.301	.244	.249	.190	.198	.197	.335
B	.190	.187	.178	.158	.125	.065	.079	.130	.193
C	.269	.226	.252	.218	.190	.118	.152	.189	.302
D	3.298	2.327	2.338	2.684	1.992	1.334	1.365	2.172	3.012
E	1.466	1.198	.988	1.331	1.661	1.226	1.472	2.553	3.628
F	.504	.318	.185	.276	.689	.648	.803	1.293	1.732
G	.202	.091	.061	.099	.253	.250	.355	.400	.624
Total	6.217	4.663	4.304	5.011	5.169	3.830	4.424	6.933	9.826

Summary Table of Percent by Direction and Speed

Speed	N	NNE	NE	ENE	E	ESE	SE	SSE	S
.45	.098	.099	.078	.030	.009	.000	.014	.032	.048
1.05	.308	.154	.125	.137	.121	.093	.090	.090	.127
2.05	.939	.602	.458	.594	.843	.606	.598	.605	1.008
3.05	1.164	1.030	.779	.981	1.468	1.075	1.093	1.478	1.982
4.05	1.179	1.024	.878	.995	1.243	.831	1.027	1.727	2.110
5.05	.839	.631	.658	.798	.724	.474	.652	1.254	1.636
6.05	.612	.467	.496	.589	.417	.313	.418	.803	1.153
8.05	.755	.437	.612	.695	.310	.313	.405	.735	1.319
10.05	.253	.157	.183	.165	.032	.093	.103	.180	.374
13.05	.053	.061	.034	.027	.001	.031	.025	.028	.072
18.00	.016	.001	.004	.000	.000	.001	.001	.002	.000
99.00	.000	.000	.000	.000	.000	.000	.000	.000	.000
Total	6.217	4.663	4.304	5.011	5.169	3.830	4.424	6.933	9.826

Summary Table of Percent by Speed and Class

Class / Speed	A	B	C	D	E	F	G
.45	.004	.001	.000	.095	.257	.275	.346
1.05	.018	.012	.027	.508	1.035	1.080	.780
2.05	.286	.171	.246	3.256	5.028	3.228	1.419
3.05	.744	.428	.616	6.258	7.173	3.272	.985
4.05	.992	.581	.781	8.165	6.404	1.902	.460
5.05	.909	.506	.808	7.302	4.357	.607	.077
6.05	.712	.388	.613	6.167	2.938	.164	.013
8.05	.819	.500	.755	7.616	2.734	.081	.011
10.05	.230	.150	.196	2.606	.667	.009	.000
13.05	.075	.032	.055	.755	.161	.001	.000
18.00	.004	.000	.018	.117	.012	.000	.000
99.00	.000	.000	.001	.001	.000	.000	.000

Figure B-1

Instantaneous View of Plume

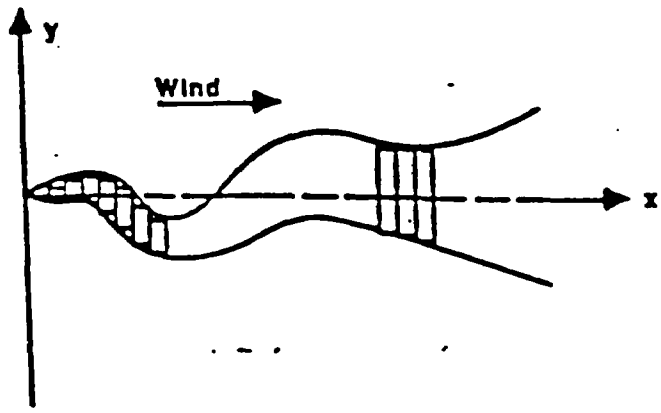

This figure represents a snapshot of a projection of a plume on the horizontal plane. As it moves downwind, the plume both meanders about the average wind direction and broadens. (Adapted from Reference 18.)

Figure B-2

A Gaussian Curve

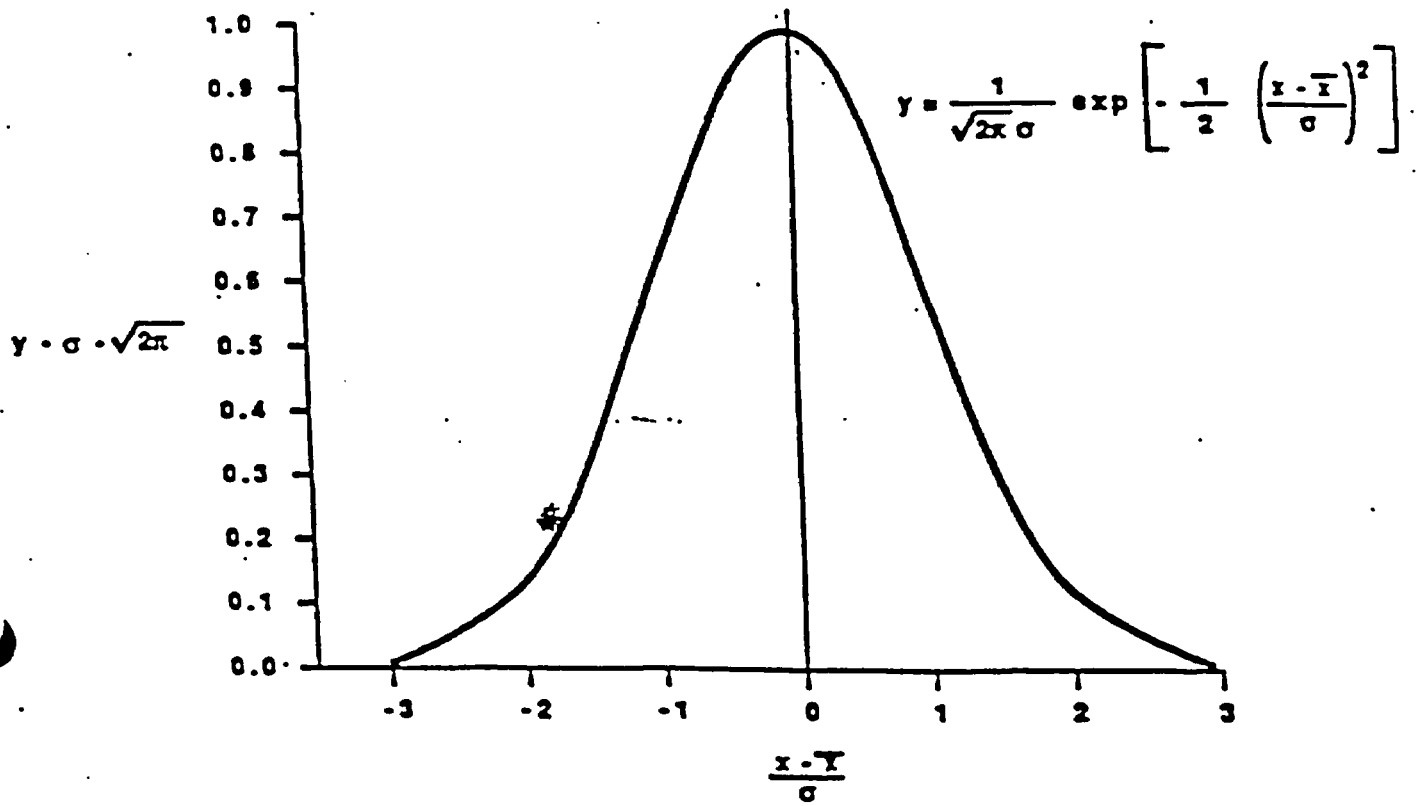

(Adapted from Reference 24 of Chapter 8, Page 61.)

Figure B-3

Effect of Observation Period on Plume Shape

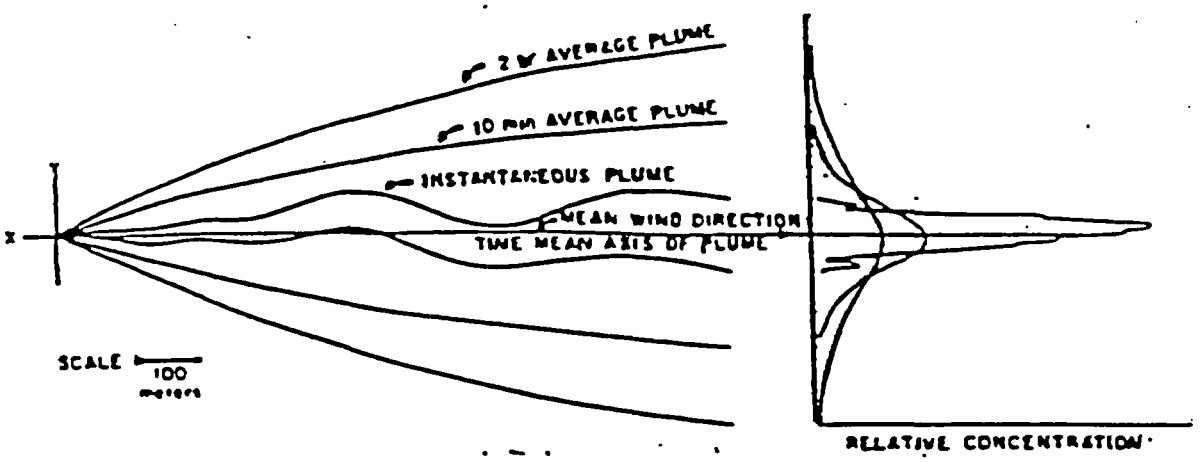

This sketch represents the approximate outlines of a smoke plume observed instantaneously and averaged over periods of 10 minutes and 2 hours. The diagram on the right shows the corresponding cross plume distribution patterns. The plume width increases as the period of observation increases (from Reference 18).

Figure B-4

A Gaussian Plume

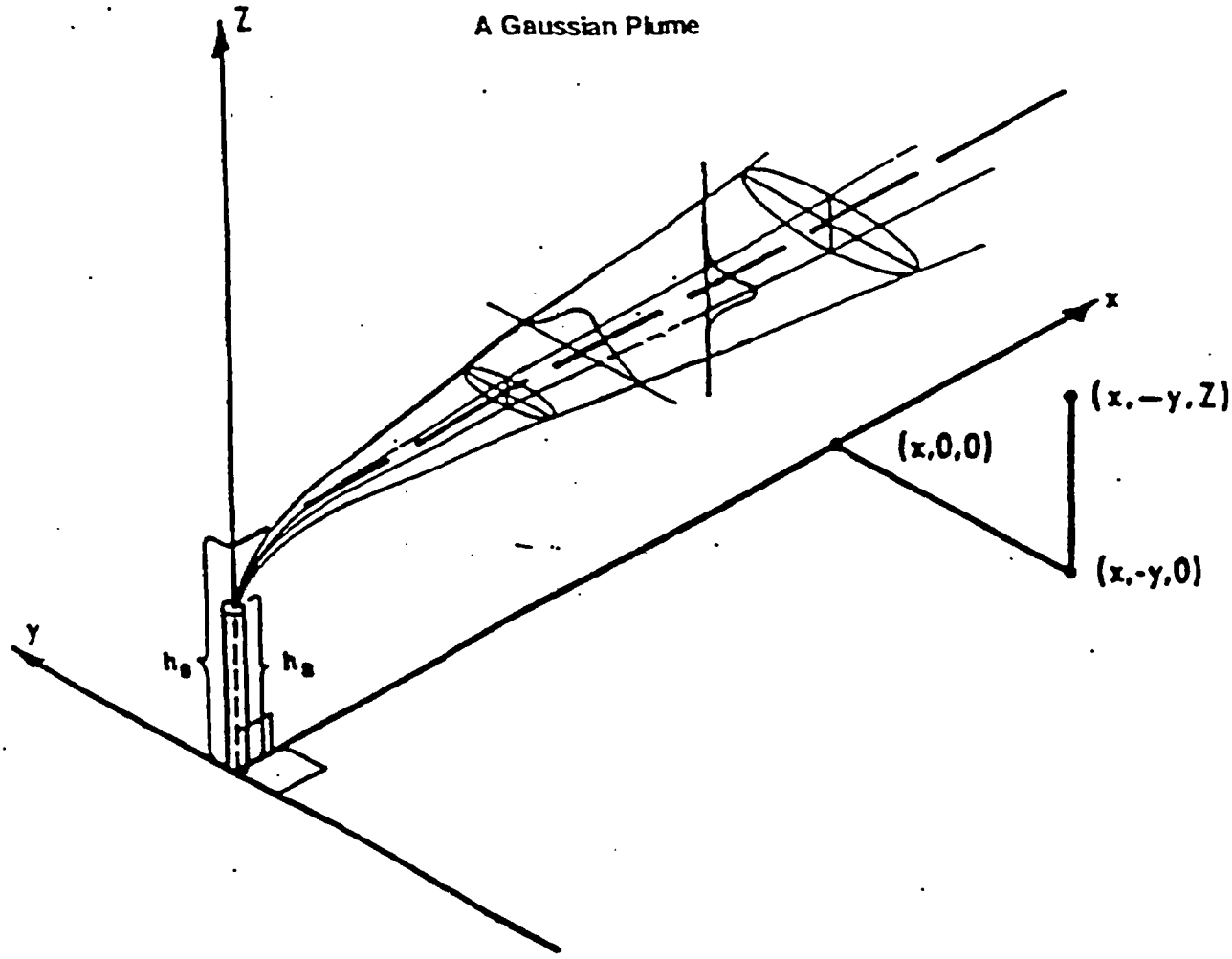

This sketch illustrates a plume characterized by Equation B-9. The plume is moving downwind in the x direction. Both the horizontal dispersion parameter σ_z increase as x increases. The reflected component has been omitted in this illustration (adapted from Reference 24).

Figure B-5

Illustration of Model for Calculation Dose

Due to Radioactivity Release

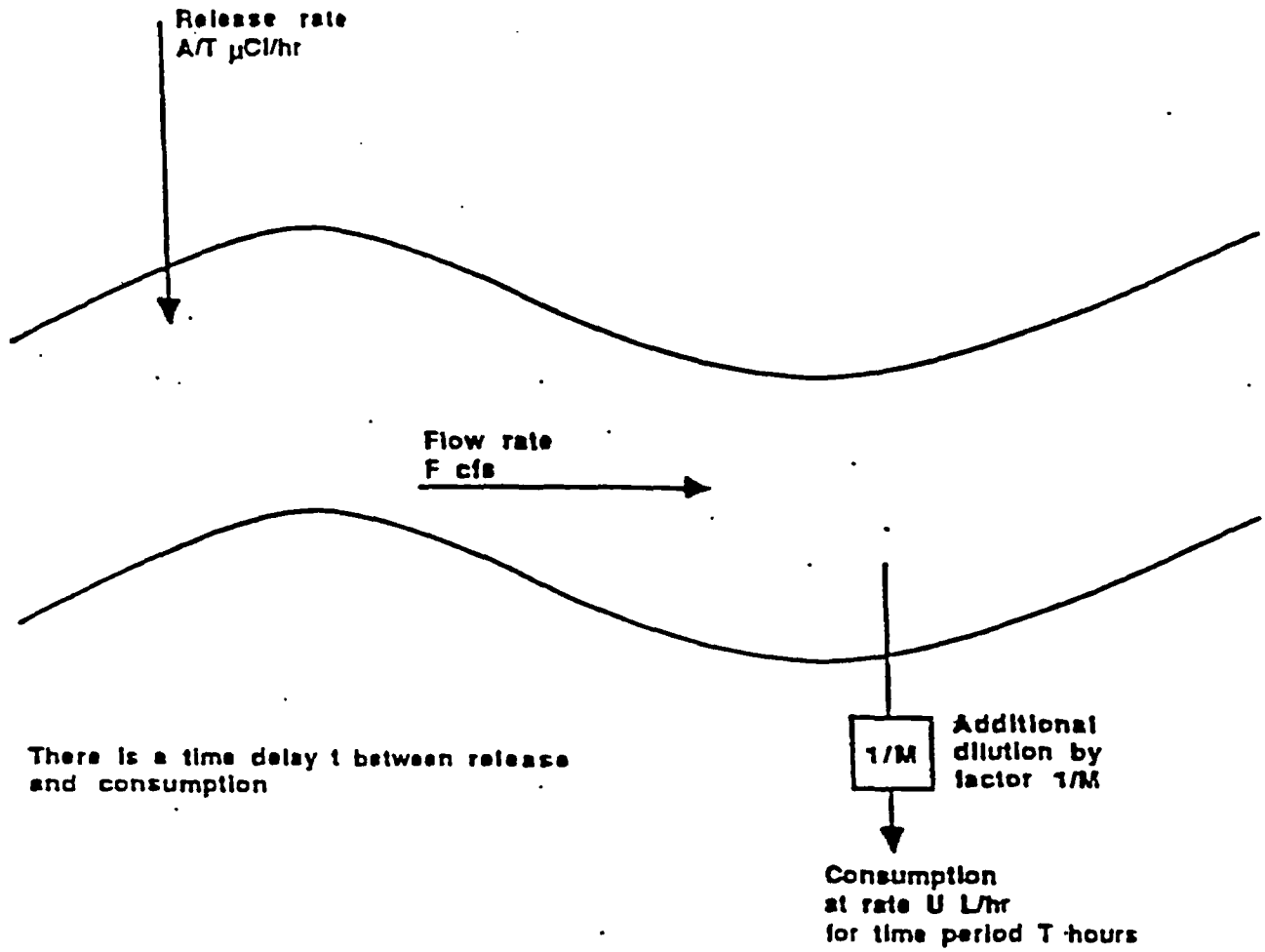

Figure B-6

Illustration of Model for Dilution of
Tank Discharge

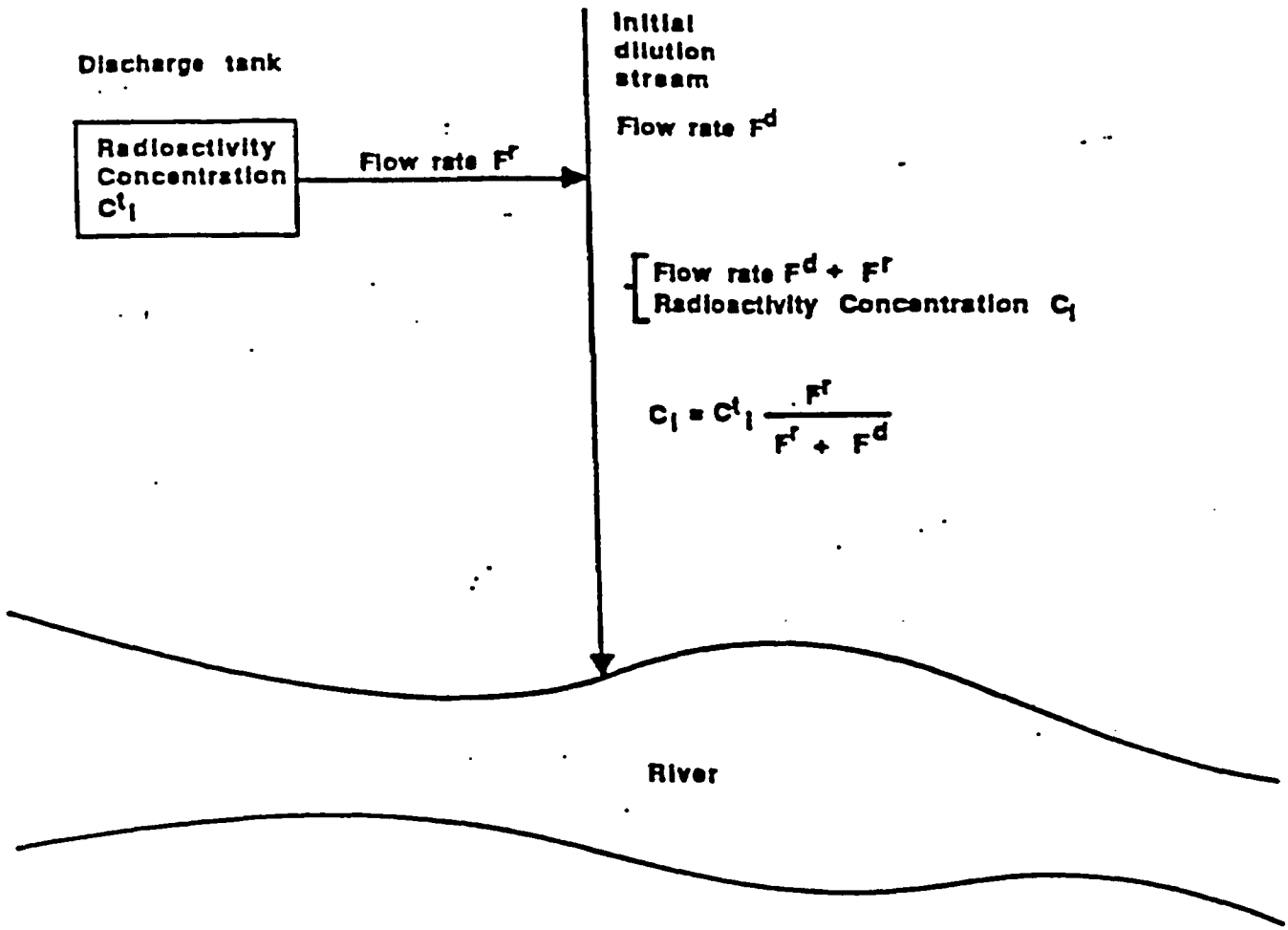

APPENDIX C

GENERIC DATA

TABLE OF CONTENTS

		PAGE
C.1	INTRODUCTION	C-1
C.2	10CFR50 DOSE COMMITMENT FACTORS	C-1
C.3	10CFR20 DOSE COMMITMENT FACTORS	C-1.

LIST OF TABLES

NUMBER	TITLE	PAGE
C-1	Miscellaneous Dose Assessment Factors - Environmental Parameters	C-3
C-2	Miscellaneous Dose Assessment Factors - Consumption Rate Parameters	C-4
C-3	Stable Element Transfer Data	C-5
C-4	Atmospheric Stability Classes	C-7
C-5	Vertical Dispersion Parameters	C-8
C-6	Allowable Concentrations of Dissolved or Entrained Noble Gases Released from the Site to Unrestricted Areas in Liquid Waste	C-9
C-7	Radiological Decay Constants (λ_i) in hr^{-1}	C-10
C-8	Bioaccumulation Factors B_i to be Used in the Absence of Site-Specific Data	C-12
C-9	Beta Air and Skin Dose Factors for Noble Gases	C-14
C-10	External Dose Factors for Standing on Contaminated Ground	C-15
C-11	Sector Code Definitions	C-17

APPENDIX C
GENERIC DATA

C.1 INTRODUCTION

This appendix contains generic (common to one or more of the stations) offsite dose calculation parameter factors, or values. Site specific factors are provided in the station annex Appendix F. The factors described in section C.2 and C.3 are found in the prescribed references and are not repeated in this appendix.

C.2 10CFR50 DOSE COMMITMENT FACTORS

The dose commitment factors for 10CFR50 related calculations are exactly those provided in Regulatory Guide 1.109 (Reference 6). The following table lists the parameters and the corresponding data tables in the RG 1.109:

PATHWAY	ADULT	TEENAGER	CHILD	INFANT
Inhalation	RG 1.109:Table E-7	RG 1.109:Table E-8	RG 1.109:Table E-9	RG 1.109:Table E-10
Ingestion	RG 1.109:Table E-11	RG 1.109:Table E-12	RG 1.109:Table E-13	RG 1.109:Table E-14

These tables are contained in Regulatory Guide 1.109 (Reference 6). Each table (E-7 through E-14) provides dose factors for seven organs for each of 73 radionuclides. For radionuclides not found in these tables, dose factors will be derived from ICRP 2 (Reference 50) or NUREG-0172 (Reference 51).

C.3 10CFR20 DOSE COMMITMENT FACTORS

Dose commitment factors for 10CFR20 related calculations are exactly those provided Federal Guidance Report Number 11 (Reference 93). The following table lists the parameters and the corresponding tables in the RG 1.109:

PATHWAY	AVERAGE INDIVIDUAL
Inhalation	FGR-11: Table 2.1
Ingestion	FGR-11: Table 2.2

The factors used in offsite dose calculations are for the seven organs (Gonad, Breast, Lung, R. Marrow, B. Surface, Thyroid and Remainder organs) but do not include the Effective (weighted) values. The factors in FGR#11 have units of Sieverts/Becquerel (Sv/Bq). To convert to traditional units of mrem/pCi multiply the factors by 3.7E+3.

NOTE: There are radionuclides listed in FGR-11 that have more than one clearance classification (day, week or year). For these nuclides, a conservative approach was used to pick the dose commitment factors for the dose calculations. For these nuclides, the highest (largest) value was picked for each organ no matter which clearance class it belonged to. As a result, for dose calculations involving these nuclides, the resulting calculated dose will be conservatively high when compared to a calculation that uses only the dose commitment factors for the clearance classification with the highest value for the Effective dose conversion factor. For example:

Assume that the radionuclide in question is Mg-28 and the pathway is inhalation. From Table 2.1 in FGR-11, the dose commitment values are:

Nuclide	Class/f_1	Gonad	Breast	Lung	R. Marrow	B. Surface	Thyroid	Remainder	Effective
Mg-28	D	2.91E-10	2.07E-10	2.96E-9	7.96E-10	1.42E-9	1.78E-10	1.04E-9	9.16E-10
	W	2.59E-10	1.46E-10	5.92E-9	4.03E-10	6.4E-10	1.07E-10	1.55E-9	1.33E-9

Mg-28 has two clearance classifications; D and W. The clearance class with the highest effective dose conversion factor (the column on the far right) is "W" clearance class. But the actual factors used in the

ODCM offsite dose calculations are picked from the highest value listed for each organ as shown in the bold text in the next table:

Nuclide	Class/f_1	Gonad	Breast	Lung	R. Marrow	B. Surface	Thyroid	Remainder	Effective
Mg-28	D	**2.91E-10**	**2.07E-10**	2.96E-9	**7.96E-10**	**1.42E-9**	**1.78E-10**	**1.04E-9**	9.16E-10
	W	2.59E-10	1.46E-10	**5.92E-9**	4.03E-10	6.4E-10	1.07E-10	**1.55E-9**	1.33E-9

Since some values are used from each of the classifications (the lung and remainder factors are class W and the gonad, breast, marrow, bone surface and thyroid are class D), the actual offsite dose calculation will result in a higher (more conservative) dose than if the organ dose conversion factors corresponding to the highest Effective dose conversion factor were used.

Table C-1
Miscellaneous Dose Assessment Factors -
Environmental Parameters

Parameter and Value	Basis*
f_p = 0.76	A
f_v = 1.0	A
t_h = 0 for pasture grass (milk and meat pathways)	A
t_h = 24 hr (1 day for leafy vegetables)	A
t_h = 1440 hr (60 days for produce)	A
t_h = 2160 hr for stored feed (milk and meat pathways)	A
t_e = 720 hr (30 days for milk and meat)	A
t_e = 1440 hr (60 days for produce or leafy vegetables)	A
f_f = 1.0 May-October	B
f_f = 0.0 November-April	B
f_g = 0.5	B
λ_w = 0.0021 hr^{-1}	A
Y_v = 2.0 kg/m^2 for leafy vegetables and produce pathways	A
Y_v = 0.7 kg/m^2 for milk and meat pathways	A
t_s = 480 hr (20 days)	A
r = 1.0 (iodines)	A
= 0.2 (others)	A
W_f = 50 kg/day	C
t_M = 48 hr (2 days)	A
t_b = 175,200 hr (20 years)	D
f_s = 1.0 May-October	B
f_s = 0.0 November-April	B

Miscellaneous Dose Assessment Factors - Environmental Parameters

*Basis key:

A: Reference 6, Table E-15.
B: Typical for climate of Illinois and vicinity.
C: Reference 6, Table E-3.
D: The parameter t_b is taken as the midpoint of plant operating life (per Reference 6, Appendix C; Section 1).

Table C-2
Miscellaneous Dose Assessment Factors -
Consumption Parameters

Type	Variable	Infant	Child	Teenager	Adult
Air	R_a (m^3/yr)	1400	3700	8000	8000
Milk	U^M_a (L/yr)	330	330	400	310
Produce	U^P_a (Kg/yr)	0	520	630	520
Leafy Vegetables	U^V_a (Kg/yr)	0	26	42	64
Meat	U^F_a (Kg/yr)	0	41	65	110
Water	U^W_a(L/hr)	0.038	0.058	0.058	0.083
Fish	U^I_a (Kg/hr)	0	7.9E-4	1.8E-3	2.4E-3

From Regulatory Guide 1.109, Table E-5.

Table C-3
Stable Element Transfer Data

Element	F_E Meat (d/kg)	F_M(Cow) Milk (d/L)	Reference
H	1.2E-02	1.0E-02	6
Be	1.5E-03	3.2E-03	Footnote 1
C	3.1E-02	1.2E-02	6
F	2.9E-03	1.4E-02	Footnote 2
Na	3.0E-02	4.0E-02	6
Mg	1.5E-03	3.2E-03	Footnote 1
Al	1.5E-02	1.3E-03	Footnote 3
P	4.6E-02	2.5E-02	6
Cl	2.9E-03	1.4E-02	Footnote 2
Ar	NA	NA	NA
K	1.8E-02	7.2E-03	16
Ca	1.6E-03	1.1E-02	16
Sc	2.4E-03	7.5E-06	Footnote 4
Ti	3.4E-02	5.0E-06	Footnote 5
V	2.8E-01	1.3E-03	Footnote 6
Cr	2.4E-03	2.2E-03	6
Mn	8.0E-04	2.5E-04	6
Fe	4.0E-02	1.2E-03	6
Co	1.3E-02	1.0E-03	6
Ni	5.3E-02	6.7E-03	6
Cu	8.0E-03	1.4E-02	6
Zn	3.0E-02	3.9E-02	6
Ga	1.5E-02	1.3E-03	Footnote 3
Ge	9.1E-04	9.9E-05	Footnote 7
As	1.7E-02	5.0E-04	Footnote 8
Se	7.7E-02	1.0E-03	Footnote 9
Br	2.9E-03	2.2E-02	F_E Footnote 2;F_M from Ref. 16
Kr	NA	NA	NA
Rb	3.1E-02	3.0E-02	6
Sr	6.0E-04	8.0E-04	6
Y	4.6E-03	1.0E-05	6
Zr	3.4E-02	5.0E-06	6
Nb	2.8E-01	2.5E-03	6
Mo	8.0E-03	7.5E-03	6
Tc	4.0E-01	2.5E-02	6
Ru	4.0E-01	1.0E-06	6
Rh	1.5E-03	1.0E-02	6
Pd	5.3E-02	6.7E-03	Footnote 10
Cd	3.0E-02	2.0E-02	Footnote 11
In	1.5E-02	1.3E-03	Footnote 3
Sn	9.1E-04	9.9E-05	Footnote 7
Sb	5.0E-03	2.0E-05	98
Ag	1.7E-02	5.0E-02	6
Te	7.7E-02	1.0E-03	6
I	2.9E-03	6.0E-03	6
Xe	NA	NA	NA
Cs	4.0E-03	1.2E-02	6
Ba	3.2E-03	4.0E-04	6
La	2.0E-04	5.0E-06	6
Ce	1.2E-03	1.0E-04	6
Pr	4.7E-03	5.0E-06	6
Nd	3.3E-03	5.0E-06	6

Table C-3 (Cont'd)
Stable Element Transfer Data

Element	F_E Meat (d/kg)	F_M (Cow) Milk (d/L)	Reference
Pm	2.9E-04	2.0E-05	16
Sm	2.9E-04	2.0E-05	16
Eu	2.9E-04	2.0E-05	16
Gd	2.9E-04	2.0E-05	16
Dy	2.9E-04	2.0E-05	16
Er	2.9E-04	2.0E-05	16
Tm	2.9E-04	2.0E-05	16
Yb	2.9E-04	2.0E-05	16
Lu	2.9E-04	2.0E-05	16
Hf	3.4E-02	5.0E-06	Footnote 5
Ta	2.8E-01	1.3E-03	F_M - Ref.16; F_E -Footnote 6
W	1.3E-03	5.0E-04	6
Re	1.0E-01	1.3E-03	F_M - Ref.16; F_E -Footnote 12
Os	2.2E-01	6.0E-04	Footnote 13
Ir	7.3E-03	5.5E-03	Footnote 14
Pt	5.3E-02	6.7E-03	Footnote 10
Au	1.3E-02	3.2E-02	Footnote 15
Hg	3.0E-02	9.7E-06	F_M - Ref.16; F_E -Footnote 11
Tl	1.5E-02	1.3E-03	F_M - Ref.16; F_E -Footnote 3
Pb	9.1E-04	9.9E-05	98
Bi	1.7E-02	5.0E-04	98
Ra	5.5E-04	5.9E-04	98
Th	1.6E-06	5.0E-06	98
U	1.6E-06	1.2E-04	98
Np	2.0E-04	5.0E-06	6
Am	1.6E-06	2.0E-05	98

Notes:
1. NA = It is assumed that noble gases are not deposited on the ground.
2. Elements listed are those considered for 10CFR20 assessment and compliance.

Footnotes:

There are numerous F_E and F_M values that were not found in published literature. In these cases, the periodic table was used in conjunction with published values. The periodic table was used based on a general assumption that elements have similar characteristics when in the same column of the periodic table. The values of elements in the same column of the periodic table, excluding atomic numbers 58-71 and 90-103, were averaged then assigned to elements missing values located in the same column of the periodic table. This method was used for all columns where there were missing values except column 3A, where there was no data, hence, the average of column 2B and 4A were used.

1. Values obtained by averaging Reference 6 values of Ca, Sr, Ba and Ra.
2. F_E value obtained by assigning the Reference 6 value for I. F_M value obtained by averaging I(Ref. 6) and Br (Ref.16).
3. F_E values obtained by averaging Zn (Ref.6) and Pb (Ref. 98); there were novalues for elements in the same column; an average is taken between values of columns 2B and 4A on the periodic table. F_M values obtained by using the value for Tl from Reference 16.
4. Values obtained by averaging Reference 6 values of Y and La.
5. Values obtained by assigning the Reference 6 value for Zr.
6. F_E values obtained from Ref. 6 value for Nb. F_M values obtained by averaging values for Nb (Ref.6) and Ta (Ref. 16).
7. Values obtained from the Reference 6 values for Pb.
8. Values obtained from the Reference 6 values for Bi.
9. Values obtained from the Reference 6 values for Te.
10. Values obtained from the Reference 6 values for Ni.
11. F_E values obtained from Ref. 6 values for Zn. F_M values obtained by averaging the Reference 6 values for Zn and Hg.
12. Values obtained by averaging Reference 6 values for Mn, Tc, Nd and Reference 98 value for U.
13. Values obtained by averaging Reference 6 values from Fe and Ru.
14. Values obtained by averaging Reference 6 values from Co and Rh.
15. Values obtained by averaging Reference 6 values from Cu and Ag.

Table C-4
Atmospheric Stability Classes

Description	Pasquill Stability Class	$^{a}\sigma_{\theta}$ (degrees)	Temperature Change with Height (°C/100 m)
Extremely Unstable	A	>22.5	<-1.9
Moderately Unstable	B	17.5 to 22.5	-1.9 to -1.7
Slightly Unstable	C	12.5 to 17.5	-1.7 to -1.5
Neutral	D	7.5 to 12.5	-1.5 to -0.5
Slightly Stable	E	3.8 to 7.5	-0.5 to 1.5
Moderately Stable	F	2.1 to 3.8	1.5 to 4.0
Extremely Stable	G	0 to 2.1	>4.0

$^{a}\sigma_{\theta}$ is the standard deviation of horizontal wind direction fluctuation over a period of 15 minutes to 1 hour.

From Regulatory Guide 1.21, Table 4B.

Table C-5
Vertical Dispersion Parameters

Section 1

Vertical Dispersion Parameters σ_z

σ_z (meters) = aR^b+c with σ_z limited to a maximum of 1000 meters
R = downwind range (meters)
a, b and c have the values listed below:

Stability Class	100 < R < 1000 a	b	c	R > 1000 a	b	c
A	*	*	*	0.00024	2.094	-9.6
B	*	*	*	*	*	*
C	0.113	0.911	0.0	*	*	*
D	0.222	0.725	-1.7	1.26	0.516	-13.0
E	0.211	0.678	-1.3	6.73	0.305	-34.0
F	0.086	0.74	-0.35	18.05	0.18	-48.6
G	0.052	0.74	-0.21	10.83	0.18	-29.2

Basis: Reference 53, except for cases denoted by an asterisk. In these cases, the value of σ_z is obtained by a polynomial approximation to the data from Reference 53 (see Section 2 of this table). The functions given in Reference 50 are not used because they are discontinuous at 1000 meters.

Section 2

Polynomial Approximation for σ_z:
σ_z (meters) = $\exp [a_0 + a_1P + a_2P^2 + a_3P^3]$ with σ_z limited to a maximum of 1000 meters
$P = \log_e [R(\text{meters})]$

a_0, a_1, a_2 and a_3 have the values listed below:

Stability Class	Range	Coefficients	
A	$100 \leq R \leq 1000$	a_0 =	-10.50
		a_1 =	6.879
		a_2 =	-1.309
		a_3 =	0.0957
B	$100 \leq R \leq 1000$	a_0 =	-0.449
		a_1 =	0.218
		a_2 =	0.112
		a_3 =	-0.00517
B	R > 1000	a_0 =	319.148
		a_1 =	-127.806
		a_2 =	17.093
		a_3 =	-0.750
C	R > 1000	a_0 =	5.300
		a_1 =	-1.866
		a_2 =	0.3509
		a_3 =	-0.01514

Table C-6
Allowable Concentration of Dissolved or Entrained Noble Gases
Released from the Site to Unrestricted Areas in Liquid Waste

Nuclide	Allowable Concentration (μCi/mL)[a] Braidwood Byron	Dresden LaSalle Quad Cities Zion
Kr 85m	2E-4	2E-4
Kr 85	2E-4	5E-4
Kr 87	2E-4	4E-5
Kr 88	2E-4	9E-5
Ar 41	2E-4	7E-5
Xe 131m	2E-4	7E-4
Xe 133m	2E-4	5E-4
Xe 133	2E-4	6E-4
Xe 135m	2E-4	2E-4
Xe 135	2E-4	2E-4

[a]Computed from Equation 17 of ICRP Publication 2 (Reference 47) adjusted for infinite cloud submersion in water, and R = 0.01 rem/week, ρ_w = 1.0 gm/cm^3, and P_w / P_t = 1.0.

Table C-7
Radiological Decay Constants (λ_i) in hr^{-1}

Isotope	Lambda		Isotope	Lambda		Isotope	Lambda
H-3	6.44E-06		AS-73	3.6E-04		TC-104	2.31E+00
BE-7	5.4E-04		AS-74	1.62E-03		RU-97	9.96E-03
C-14	1.38E-08		AS-76	2.63E-02		RU-103	7.34E-04
F-18	3.78E-01		AS-77	1.79E-02		RU-105	1.56E-01
NA-22	3.04E-05		SE-73	9.69E-02		RU-106	7.84E-05
NA-24	4.62E-02		SE-75	2.41E-04		RH-106	8.33E+01
MG-27	4.39E+00		BR-77	1.21E-02		PD-109	5.15E-02
MG-28	3.31E-02		BR-80	2.38E+00		CD-109	6.22E-05
AL-26	1.10E-10		BR-82	1.96E-02		IN-111	1.02E-02
AL-28	1.85E+01		BR-83	2.90E-01		IN-115M	1.59E-01
P-32	2.02E-03		BR-84	1.30E+00		IN-116	7.66E-01
CL-38	1.12E+00		BR-85	1.45E+01		SN-113	2.51E-04
AR-41	3.79E-01		KR-79	1.98E-02		SN-117M	2.12E-03
K-40	6.19E-14		KR-81	3.77E-10		SN-119M	9.85E-05
K-42	5.61E-02		KR-83M	3.79E-01		SB-117	2.48E-01
K-43	3.07E-02		KR-85M	1.55E-01		SB-122	1.07E-02
CA-47	6.37E-03		KR-85	7.38E-06		SB-124	4.80E-04
SC-44	1.76E-01		KR-87	5.44E-01		SB-125	2.86E-05
SC-46M	1.33E+02		KR-88	2.44E-01		SB-126	2.33E-03
SC-46	3.44E-04		KR-90	7.71E+00		AG-108M	6.23E-07
SC-47	8.44E-03		RB-84	8.78E-04		AG-108	1.75E+01
TI-44	1.67E-06		RB-86	1.55E-03		AG-110M	1.16E-04
V-48	1.81E-03		RB-87	1.67E-15		AG-111	3.87E-03
CR-51	1.04E-03		RB-88	2.33E+00		TE-121M	1.88E-04
MN-52M	1.94E+00		RB-89	2.69E+00		TE-121	1.72E-03
MN-52	5.16E-03		SR-85	4.45E-04		TE-123M	2.41E-04
MN-54	9.23E-05		SR-87M	2.47E-01		TE-125M	4.98E-04
MN-56	2.69E-01		SR-89	5.71E-04		TE-125	0.00E+00
FE-52	8.37E-02		SR-90	2.77E-06		TE-127M	2.65E-04
FE-55	2.93E-05		SR-91	7.29E-02		TE-127	7.41E-02
FE-59	6.47E-04		SR-92	2.56E-01		TE-129M	8.59E-04
CO-57	1.07E-04		Y-86	4.70E-02		TE-129	5.96E-01
CO-58	4.08E-04		Y-87	8.63E-03		TE-131M	2.31E-02
CO-60	1.50E-05		Y-88	2.71E-04		TE-131	1.66E+00
NI-63	7.90E-07		Y-90	1.08E-02		TE-132	8.86E-03
NI-65	2.75E-01		Y-91M	8.35E-01		TE-134	9.93E-01
CU-64	5.46E-02		Y-91	4.94E-04		I-123	5.28E-02
CU-67	4.67E-04		Y-92	1.96E-01		I-124	6.91E-03
CU-68	8.31E+01		Y-93	6.86E-02		I-125	4.80E-04
ZN-65	1.18E-04		ZR-95	4.51E-04		I-130	5.61E-02
ZN-69M	5.04E-02		ZR-97	4.10E-02		I-131	3.59E-03
ZN-69	7.46E-01		NB-94	3.90E-09		I-132	3.01E-01
GA-66	7.37E-02		NB-95	8.00E-03		I-133	3.33E-02
GA-67	8.85E-03		NB-97M	4.15E+01		I-134	7.89E-01
GA-68	6.10E-01		NB-97	5.76E-01		I-135	1.05E-01
GA-72	4.91E-02		MO-99	1.05E-02		XE-127	7.93E-04
GE-77	6.13E-02		TC-99M	1.15E-01		XE-129M	3.25E-03
AS-72	2.67E-02		TC-101	2.92E+00		XE-131M	2.44E-03

Table C-7 (Cont'd)
Radiological Decay Constants (λ_i) In hr^{-1}

Isotope	Lambda		Isotope	Lambda
XE-133M	1.32E-02		YB-175	6.89E-03
XE-133	5.51E-03		LU-177	4.30E-03
XE-135M	2.70E+00		HF-181	6.81E-04
XE-135	7.61E-02		TA-182	2.52E-04
XE-137	1.08E+01		TA-183	5.78E-03
XE-138	2.94E+00		W-187	2.91E-02
CS-129	2.16E-02		RE-188	4.08E-02
CS-132	4.46E-03		OS-191	1.88E-03
CS-134	3.84E-05		IR-194	3.62E-02
CS-136	2.19E-03		PT-195M	7.18E-03
CS-137	2.62E-06		PT-197	3.79E-02
CS-138	1.29E+00		AU-195M	8.15E+01
CS-139	4.41E+00		AU-195	1.58E-04
BA-131	2.45E-03		AU-198	1.07E-02
BA-133M	1.78E-02		AU-199	9.20E-03
BA-133	7.53E-06		HG-197	2.91E-02
BA-135M	2.41E-02		HG-203	6.20E-04
BA-137M	1.63E+01		TL-201	9.49E-03
BA-137	0.00E+00		TL-206	9.90E+00
BA-139	4.99E-01		TL-208	1.36E+01
BA-140	2.26E-03		PB-203	1.33E-02
BA-141	2.27E+00		PB-210	3.55E-06
BA-142	3.88E+00		PB-212	6.51E-02
LA-140	1.72E-02		PB-214	1.55E+00
LA-142	4.35E-01		BI-206	4.63E-03
CE-139	2.10E-04		BI-207	2.37E-06
CE-141	8.88E-04		BI-214	2.09E+00
CE-143	2.10E-02		RA-226	4.94E-08
CE-144	1.02E-04		TH-232	5.63E-15
PR-142	3.62E-02		U-238	1.77E-14
PR-143	2.13E-03		NP-239	1.23E-02
PR-144	2.40E+00		AM-241	1.83E-07
ND-147	2.63E-03			
ND-149	4.01E-01			
PM-145	4.47E-06			
PM-148M	6.99E-04			
PM-148	5.38E-03			
PM-149	1.31E-02			
SM-153	1.48E-02			
EU-152	5.82E-06			
EU-154	8.99E-06			
EU-155	1.59E-05			
GD-153	1.20E-04			
DY-157	8.60E-02			
ER-169	3.07E-03			
ER-171	9.22E-02			
TM-170	2.25E-04			
YB-169	9.03E-04			

(λ_i) =Radiological Decay Constant
$= 0.693/T_i$

T_i = Radiological Half-Life in hours
(from Reference 70).
Except for Cu-68, Tc-104, Ba-137, Ta-183, TL-206, Bi-206 which are from References 100.

Table C-8
Bioaccumulation Factors (B_i) to be Used
in the Absence of Site-Specific Data

Element	B_i for Freshwater Fish (pCi/kg per pCi/L)	Reference
H	9.0E-01	6
Be	2.8E+01	Footnote 2
C	4.6E+03	6
F	2.2E+02	Footnote 16
Na	1.0E+02	6
Mg	2.8E+01	Footnote 2
Al	2.2E+03	Footnote 13
P	1.0E+05	6
Cl	2.2E+02	Footnote 16
Ar	NA	NA
K	1.0E+03	Footnote 1
Ca	2.8E+01	Footnote 2
Sc	2.5E+01	Footnote 3
Ti	3.3E+00	Footnote 4
V	3.0E+04	Footnote 5
Cr	2.0E+02	6
Mn	4.0E+02	6
Fe	1.0E+02	6
Co	5.0E+01	6
Ni	1.0E+02	6
Cu	5.0E+01	6
Zn	2.0E+03	6
Ga	2.2E+03	Footnote 13
Ge	2.4E+03	Footnote 12
As	3.3E+04	Footnote 14
Se	4.0E+02	Footnote 15
Br	4.2E+02	6
Kr	NA	NA
Rb	2.0E+03	6
Sr	3.0E+01	6
Y	2.5E+01	6
Zr	3.3E+00	6
Nb	3.0E+04	6
Mo	1.0E+01	6
Tc	1.5E+01	6
Ru	1.0E+01	6
Rh	1.0E+01	6
Pd	1.0E+02	Footnote 9
Cd	2.0E+03	Footnote 11
In	2.2E+03	Footnote 13
Sn	2.4E+03	Footnote 12
Sb	1.0E+00	98
Ag	2.3E+00	56
Te	4.0E+02	6
I	1.5E+01	6
Xe	NA	NA
Cs	2.0E+03	6
Ba	4.0E+00	6
La	2.5E+01	6
Ce	1.0E+00	6
Pr	2.5E+01	6
Nd	2.5E+01	6
Pm	3.0E+01	98
Sm	3.0E+01	Footnote 3

Table C-8 (Cont'd)
Bioaccumulation Factors (B_i) to be Used
in the Absence of Site-Specific Data

Element	B_i for Freshwater Fish (pCi/kg per pCi/L)	Reference
Eu	1.0E+02	Footnote 3
Gd	2.6E+01	Footnote 3
Dy	2.2E+03	Footnote 3
Er	3.3E+04	Footnote 3
Tm	4.0E+02	Footnote 3
Yb	2.2E+02	Footnote 3
Lu	2.5E+01	Footnote 3
Hf	3.3E+00	Footnote 4
Ta	3.0E+04	Footnote 5
W	1.2E+03	6
Re	2.1E+02	Footnote 6
Os	5.5E+01	Footnote 7
Ir	3.0E+01	Footnote 8
Pt	1.0E+02	Footnote 9
Au	2.6E+01	Footnote 10
Hg	2.0E+03	Footnote 11
Tl	2.2E+03	Footnote 13
Pb	3.0E+02	98
Bi	2.0E+01	98
Ra	5.0E+01	98
Th	3.0E+01	98
U	1.0E+01	98
Np	1.0E+01	6
Am	3.0E+01	98

Footnotes:
NA = It is assumed that noble gases are not accumulated.

In Reference 6, see Table A-1.

A number of bioaccumulation factors could not be found in literature. In this case, the periodic table was used in conjunction with published element values. This method was used for periodic table columns except where there were no values for column 3A so the average of columns 2B and 4A was assigned.

1. Value is the average of Reference 6 values in literature for H, Na, Rb and Cs.
2. Value is the average of Ref. 6 values in literature for Sr, Ba and Ref. 98 values for Ra.
3. Value is the same as the Reference 6 value used for Y.
4. Value is the same as the Reference 6 value used for Zr.
5. Value is the same as the Reference 6 value used for Nb.
6. Value is the average of Reference 6 values in literature for Mn and Tc.
7. Value is the average of Reference 6 values in literature for Fe and Ru.
8. Value is the average of Reference 6 values in literature for Co and Rh.
9. Value is the same as the Reference 6 value used for Ni.
10. Value is the average of Reference 6 values in literature for Cu and Reference 56 value for Ag.
11. Value used is the same as the Reference 6 value used for Zn.
12. Value is the average of Reference 6 value in literature for C and Reference 98 value for Pb.
13. Value is the average of columns 2B and 4A, where column 2B is the "Reference 6 value for Zn" and column 4A is the average of "Reference 6 value for C and Reference 98 value for Pb".
14. Value is the average of Ref. 6 value found in literature for P and the Ref. 98 values for Bi and Sb.
15. Value is the same as the Reference 6 value used for Te.
16. Value is the average of Reference 6 values found in literature for Br and I.

Table C-9
Beta Air and Skin Dose Factors for Noble Gases

Nuclide	Beta Air Dose Factor L_i (mrad/yr per µCi/m^3)	Beta Skin Dose Factor $\bar{L}_i$ (mrem/yr per µCi/ m^3)
Kr-83m	2.88E+02	—
Kr-85m	1.97E+03	1.46E+03
Kr-85	1.95E+03	1.34E+03
Kr-87	1.03E+04	9.73E+03
Kr-88	2.93E+03	2.37E+03
Kr-89	1.06E+04	1.01E+04
Kr-90	7.83E+03	7.29E+03
Xe-131m	1.11E+03	4.76E+02
Xe-133m	1.48E+03	9.94E+02
Xe-133	1.05E+03	3.06E+02
Xe-135m	7.39E+02	7.11E+02
Xe-135	2.46E+03	1.86E+03
Xe-137	1.27E+04	1.22E+04
Xe-138	4.75E+03	4.13E+03
Ar-41	3.28E+03	2.69E+03

Source: Table B-1 of Reference 6.

Table C-10
External Dose Factors for Standing on Contaminated Ground
DFG_{ij} (mrem/hr per pCi/ m^2)

Element	Whole Body Dose Factor	Reference	Element	Dose Factor	Reference
H-3	0.00E+00	6	Be-7	5.95E-10	99
C-14	0.00E+00	6	F-18	1.19E-08	99
Na-22	2.42E-08	99	Na-24	2.50E-08	6
Mg-27	1.14E-08	99	Mg-28	1.48E-08	99
Al-26	2.95E-08	99	Al-28	2.00E-08	99
P-32	0.00E+00	6	Cl-38	1.70E-08	99
Ar-41	1.39E-08	99	K-40	2.22E-09	99
K-42	4.64E-09	99	K-43	1.19E-08	99
Ca-47	1.14E-08	99	Sc-44	2.50E-08	99
Sc-46m	1.21E-09	99	Sc-46	2.24E-08	99
Sc-47	1.46E-09	99	Ti-44	1.95E-09	99
V-48	3.21E-08	99	Cr-51	2.20E-10	6
Mn-52m	2.79E-08	99	Mn-52	3.80E-08	99
Mn-54	5.80E-09	6	Mn-56	1.10E-08	6
Fe-52	9.12E-09	99	Fe-55	0.00E+00	6
Fe-59	8.00E-09	6	Co-57	1.65E-09	99
Co-58	7.00E-09	6	Co-60	1.70E-08	6
Ni-63	0.00E+00	6	Ni-65	3.70E-09	6
Cu-64	1.50E-09	6	Cu-67	1.52E-09	99
Cu-68	8.60E-09[1]	–	Zn-65	4.00E-09	6
Zn-69m	5.06E-09	99	Zn-69	0.00E+00	6
Ga-66	2.70E-08	99	Ga-67	1.89E-09	99
Ga-68	1.24E-08	99	Ga-72	3.00E-08	99
Ge-77	1.34E-08	99	As-72	2.23E-08	99
As-73	1.16E-10	99	As-74	9.41E-09	99
As-76	6.46E-09	99	As-77	1.79E-10	99
Se-73	1.38E-08	99	Se-75	4.98E-09	99
Br-77	3.84E-09	99	Br-80	2.01E-09	99
Br-82	3.00E-08	99	Br-83	6.40E-11	6
Br-84	1.20E-08	6	Br-85	0.00E+00	6
Kr-79	3.07E-09	99	Kr-81	1.59E-10	99
Kr-83m	1.42E-11	99	Kr-85m	2.24E-09	99
Kr-85	1.35E-10	99	Kr-87	1.03E-08	99
Kr-88	2.07E-08	99	Kr-90	1.56E-08	99
Rb-84	1.07E-08	99	Rb-86	6.30E-10	6
Rb-87	0.00E+00	99	Rb-88	3.50E-09	6
Rb-89	1.50E-08	6	Sr-85	6.16E-09	99
Sr-87m	3.92E-09	99	Sr-89	5.60E-13	6
Sr-90	1.84E-11	99	Sr-91	7.10E-09	6
Sr-92	9.00E-09	6	Y-86	4.00E-08	99
Y-87	5.53E-09	99	Y-88	2.88E-08	99
Y-90	2.20E-12	6	Y-91m	3.80E-09	6
Y-91	2.40E-11	6	Y-92	1.60E-09	6
Y-93	5.70E-10	6	Zr-95	5.00E-09	6
Zr-97	5.50E-09	6	Nb-94	1.84E-08	99
Nb-95	5.10E-09	6	Nb-97m	8.57E-09	99
Nb-97	8.48E-09	99	Mo-99	1.90E-09	6
Tc-99m	9.60E-10	6	Tc-101	2.70E-09	6
Tc-104	1.83E-08[1]	–	Ru-97	2.99E-09	99
Ru-103	3.60E-09	6	Ru-105	4.50E-09	6
Ru/Rh-106	5.76E-09[3]	6, 99	Pc-109	3.80E-10	99
Cc-109	1.12E-10	99	In-111	5.11E-09	99
In-115m	2.01E-09	99	In-116	0.00E+00[2]	–
Sn-113	1.15E-09	99	Sn-117m	1.96E-08	99
Sn-119m	7.05E-11	99	Sb-117	0.00E+00[2]	–
Sb-122	2.71E-09[1]	–	Sb-124	1.16E-08[1]	–
Sb-125	4.56E-09	99	Sb-126	7.13E-10	99
Ag-108m	1.92E-08	99	Ag-108	1.14E-09	99
Ag-110m	1.80E-08	6	Ag-111	6.75E-10	99
Te-121m	2.65E-09	99	Te-121	6.75E-09	99
Te-123m	1.88E-09	99	Te-125m	3.50E-11	6
Te-125	0.00E+00[2]	–	Te-127m	1.10E-12	6
Te-127	1.00E-11	6	Te-129m	7.70E-10	6
Te-129	7.10E-10	6	Te-131m	8.40E-09	6
Te-131	2.20E-09	6	Te-I-132	3.40E-09[5]	6
Te-134	1.05E-08	99	I-123	2.12E-09	99
I-124	1.23E-08	99	I-125	2.89E-10	99
I-130	1.40E-08	6	I-131	2.80E-09	6
I-133	3.70E-09	6	I-134	1.60E-08	6
I-135	1.20E-08	6	Xe-127	3.44E-09	99

Table C-10 (cont.)
External Dose Factors for Standing on Contaminated Ground
DFG_{ij} (mrem/hr per pCi/ m^2)

Element	Whole Body Dose Factor	Reference	Element	Dose Factor	Reference
Xe-129m	5.57E-10	99	Xe-131m	2.13E-10	99
Xe-133m	4.81E-10	99	Xe-133	5.91E-10	99
Xe-135m	5.23E-09	99	Xe-135	3.36E-09	99
Xe-137	4.26E-09	99	Xe-138	1.30E-08	99
Cs-129	3.39E-09	99	Cs-132	8.40E-09	99
Cs-134	1.20E-08	6	Cs-136	1.50E-08	6
Cs-137/Ba-137m	1.14E-08[4]	6, 99	Cs-138	2.10E-08	6
Cs-139	5.15E-09	99	Ba-131	5.74E-09	99
Ba-133m	8.10E-10	99	Ba-133	4.85E-09	99
Ba-135m	7.26E-10	99	Ba-137m	7.17E-09	99
Ba-137	0.00E+00[2]	–	Ba-139	2.40E-09	6
Ba-La-140	1.71E-08[6]	6	Ba-141	4.30E-09	6
Ba-142	7.90E-09	6	La-142	1.50E-08	6
Ce-139	2.04E-09	99	Ce-141	5.50E-10	6
Ce-143	2.20E-09	6	Ce-Pr-144	5.20E-10[7]	6
Pr-142	1.84E-09	99	Pr-143	0.00E+00	6
Nc-147	1.00E-09	6	Nc-149	5.32E-09	99
Pm-145	3.38E-10	99	Pm-148m	2.35E-08	99
Pm-148	7.22E-09	99	Pm-149	5.32E-10	99
Sm-153	8.95E-10	99	Eu-152	1.30E-08	99
Eu-154	1.41E-08	99	Eu-155	8.27E-10	99
Gc-153	1.46E-09	99	Dy-157	4.39E-09	99
Er-169	6.12E-14	99	Er-171	5.11E-09	99
Tm-170	3.41E-10	99	Yb-169	4.12E-09	99
Yb-175	4.94E-10	99	Lu-177	4.60E-10	99
Hf-181	6.67E-09	99	Ta-182	1.42E-08	99
Ta-183	2.93E-09[1]	–	W-187	3.10E-09	6
Re-188	1.89E-09	99	Os-191	9.83E-10	99
Ir-194	2.31E-09	99	Pt-195m	9.79E-10	99
Pt-197	3.57E-10	99	Au-195m	2.54E-09	99
Au-195	1.14E-09	99	Au-198	5.19E-09	99
Au-199	1.18E-09	99	Hg-197	9.33E-10	99
Hg-203	2.89E-09	99	Tl-201	1.24E-09	99
Tl-206	0.00E+00[2]	–	Tl-208	3.58E-08	99
Pb-203	3.88E-09	99	Pb-210	3.57E-11	99
Pb-212	1.91E-09	99	Pb-214	3.18E-09	99
Bi-206	3.74E-08	99	Bi-207	1.77E-08	99
Bi-214	1.71E-08	99	Ra-226	8.78E-11	99
Th-232	8.14E-12	99	U-238	7.98E-12	99
Np-239	9.50E-10	6	Am-241	3.48E-10	99

1 Valued derived by comparing the percentage and MeV of the nuclide's gammas and then comparing to Cesium-137, as a value was not available in the literature.

2 0.0 due to low yield and short half life. A value was not available in the literature.

3 Value is the sum of Ru-106 (1.50E-9) and Rh-106 (4.26E-9). The Rh-106 value is from Reference 99 and the Ru-106 value is from Reference 6.

4 Value is the sum of Cs-137 (4.20E-9) and Ba-137m (7.17E-9). The values are from references 6 and 99, respectively.

5 Value is the sum of Te-132 (1.70E-9) and I-132 (1.70E-9).

6 Value is the sum of Ba-140 (2.10E-9) and La-140 (1.50E-8) from reference 6. In Reference 6, see Table E-6.

7 Value is the sum of Ce-144 (3.20E-10) and Pr-144 (2.00E-10) from reference 6.

Note: Dose assessments for 10CFR20 and 40CFR190 compliance are made for an adult only using the dose commitment factors of Federal Guidance Report 11 (Reference 93). These are given in units of Sieverts per Becquerel. To convert these data to the conventional units of (mrem/pCi) the data must be multiplied by 3.7×10^3.

Dose assessments for 10CFR50 Appendix are made using dose factors of Regulatory Guide 1.109 (Reference 6) for all age groups.

Table C-11

Sector Code Definitions

Sector Code	Sector Direction	Angle from North (Degrees)
A	N	$348.75 < \theta \leq 11.25$
B	NNE	$11.25 < \theta \leq 33.75$
C	NE	$33.75 < \theta \leq 56.25$
D	ENE	$56.25 < \theta \leq 78.75$
E	E	$78.75 < \theta \leq 101.25$
F	ESE	$101.25 < \theta \leq 123.75$
G	SE	$123.75 < \theta \leq 146.25$
H	SSE	$146.25 < \theta \leq 168.75$
J	S	$168.75 < \theta \leq 191.25$
K	SSW	$191.25 < \theta \leq 213.75$
L	SW	$213.75 < \theta \leq 236.25$
M	WSW	$236.25 < \theta \leq 258.75$
N	W	$258.75 < \theta \leq 281.25$
P	WNW	$281.25 < \theta \leq 303.75$
Q	NW	$303.75 < \theta \leq 326.25$
R	NNW	$326.25 < \theta \leq 348.75$

DRESDEN ANNEX INDEX

CHAPTER 10

REVISION 4

CHAPTER 10

RADIOACTIVE EFFLUENT TREATMENT AND MONITORING

TABLE OF CONTENTS

PAGE

10.1 AIRBORNE RELEASES 10-1

1. System Description 10-1
   1. Condenser Offgas Treatment System 10-1
   2. Ventilation Exhaust Treatment System 10-1

2. Radiation Monitors 10-2
   1. Unit 1 Chimney Monitor 10-2
   2. Units 2/3 Chimney Monitor 10-2
   3. Reactor Building Vent Stack Effluent Monitors 10-2
   4. Reactor Building Ventilation Monitors 10-3
   5. Condenser Air Ejector Monitors 10-3
   6. Isolation Condenser Vent Monitor 10-3
   7. Chemical Cleaning Building Chimney Monitor 10-3

3. Alarm and Trip Setpoints 10-3
   1. Setpoint Calculations 10-3
      1. Reactor Building Vent Monitors 10-3
      2. Condenser Air Ejector Monitors 10-3
      3. Units 2/3 Plant Chimney Radiation Monitor 10-3
   2. Release Limits 10-4
   3. Release Mixture 10-5
   4. Conversion Factors 10-5
   5. HVAC Flow Rates 10-6

4. Allocation of Effluents from Common Release Points 10-6

5. Dose Projections 10-6

CHAPTER 10

RADIOACTIVE EFFLUENT TREATMENT AND MONITORING

TABLE OF CONTENTS(Cont'd)

PAGE

10.2 LIQUID RELEASE 10-6

1. System Description 10-6
   1. Unit 1 Storage Tanks 10-6
   2. Units 2/3 Waste Sample Tanks 10-6
   3. Units 2/3 Floor Drain Sample Tanks 10-7
   4. Units 2/3 Waste Surge Tank 10-7

2. Radiation Monitors 10-7
   1. Liquid Radwaste Effluent Monitor 10-7
   2. Units 2 & 3 Service Water Effluent Monitors 10-7

3. Alarm and Trip Setpoints 10-8
   1. Setpoint Calculations 10-8
      1. Liquid Radwaste Effluent Monitor 10-8
      2. Units 2 & 3 Service Water Effluent Monitor 10-9

   2. Discharge Flow Rates 10-9
      1. Release Tank Discharge Flow Rate 10-9

   3. Release Limits 10-10
   4. Release Mixture 10-10
   5. Conversion Factors 10-10
   6. Liquid Dilution Flow Rates 10-10

4. Allocation of Effluents from Common Release Points 10-10

5. Projected Doses for Releases 10-10

10.3 SOLIDIFICATION OF WASTE/PROCESS CONTROL PROGRAM 10-10

CHAPTER 10

LIST OF FIGURES

NUMBER		PAGE
10-1	Simplified Gaseous Radwaste and Gaseous Effluent Flow Diagram	10-11
10-2	Simplified Gaseous Radwaste and Gaseous Effluent Flow Diagram	10-12
10-3	Simplified Liquid Radwaste Processing and Liquid Effluent Flow Diagram	10-13
10-4	Simplified Solid Radwaste Processing Diagram	10-14

CHAPTER 10

RADIOACTIVE EFFLUENT TREATMENT AND MONITORING

10.1 AIRBORNE RELEASES

10.1.1 System Description

A simplified gaseous radwaste and gaseous effluent flow diagram is provided for Dresden Unit 1 in Figure 10-1 and for Dresden Units 2 and 3 in Figure 10-2. Dresden 1 is no longer operational, but monitoring of potentially radioactive releases from the plant chimney continues.

Each airborne release point is classified as stack, vent, or ground level in accordance with the definitions in Section 4.1.4 and the results in Table A-1 of Appendix A. The principal release points for potentially radioactive airborne effluents and their classifications are as follows:

- For Dresden 1:
  - -- The Chemical Cleaning Building Chimney (a vent release point)
  - -- The plant chimney (a stack release point).
- For Dresden 2/3:
  - -- The ventilation chimney (a stack release point).
  - -- The reactor building ventilation stack (a vent release point).

10.1.1.1 Condenser Offgas Treatment System

The condenser offgas treatment system is designed and installed to reduce radioactive gaseous effluents by collecting non-condensable off-gases from the condenser and providing for holdup to reduce the total radioactivity by radiodecay prior to release to the environment. The daughter products are retained by charcoal and HEPA filters. The system is described in Section 11.3 of the Dresden UFSAR.

10.1.1.2 Ventilation Exhaust Treatment System

Ventilation exhaust treatment systems are designed and installed to reduce gaseous radioiodine or radioactive material in particulate form in selected effluent streams by passing ventilation or vent exhaust gases through charcoal absorbers and/or HEPA filters prior to release to the environment. Such a system is not considered to have any effect on noble gas effluents. The ventilation exhaust treatment systems are shown in Figures 10-1 and 10-2.

Engineered safety features atmospheric cleanup systems are not considered to be ventilation exhaust treatment system components.

10.1.2 Radiation Monitors

10.1.2.1 Unit 1 Chimney Monitor

The SPING continuously monitors the final effluent from the Unit 1 chimney.

The monitor has isokinetic sampling, gaseous grab sampling, and particulate and iodine sampling capability. Tritium samples are obtained using a portable sampling system. A tap is available for obtaining a sample from the isokinetic probe.

In normal operation all three noble gas channels (low, mid-range, high) are on line and active.

No automatic isolation or control functions are performed by this monitor.

10.1.2.2 Units 2/3 Chimney Monitor

The SPING continuously monitors the final effluent from the Units 2/3 chimney.

The monitor has isokinetic sampling, gaseous grab sampling, particulate and iodine sampling, and postaccident sampling capability. Tritium samples are obtained using a portable sampling system. A tap is available for obtaining a sample from the isokinetic probe.

In normal operation the two lower noble gas channels (low and mid-range) are on line and active. The high range noble gas channel flow is bypassed and this channel is in standby. At a predetermined threshold the low and mid-range noble gas channels are bypassed and only the high range noble gas channel remains active.

No automatic isolation or control functions are performed by this monitor. Pertinent information on this monitor is provided in the Dresden UFSAR Section 11.5.

In addition to the primary monitor described above, there is a backup system consisting of two additional detectors and sample taps in series in the primary sample stream.

10.1.2.3 Reactor Building Vent Stack Effluent Monitors

The SPING continuously monitors the final effluent from the reactor building vent stack.

The vent stack monitor has isokinetic sampling, gaseous sampling, and iodine and particulate sampling capability. Tritium samples are obtained using a portable sampling system. A tap is available for obtaining a sample from the isokinetic probe.

All channels are continuously on line and active.

No automatic isolation or control functions are performed by this monitor.

10.1.2.4 Reactor Building Ventilation Monitors

The monitor (located in the ventilation exhaust duct) monitors the effluent from the Unit 2(3) reactor building ventilation. On high alarm, the monitors automatically initiate isolation of the Unit 2(3) reactor building ventilation, and initiate startup of the Unit 2/3 standby gas treatment system.

Pertinent information on these monitors is provided in Dresden UFSAR Section 11.5.

10.1.2.5 Condenser Air Ejector Monitors

The monitors continuously monitor gross gamma activity downstream of the Unit 2 and 3 steam jet air ejector and prior to release to the main chimney.

At the trip setpoint the monitors automatically activate an interval timer which in turn initiates closure of an air operated valve, thus terminating the release.
Pertinent information on these monitors is found in Dresden UFSAR Section 11.5.

10.1.2.6 Isolation Condenser Vent Monitor

The monitor continuously monitors radioactivity in the effluent from the isolation condenser vent. No control device is initiated by this monitor.

Pertinent information on this monitor is provided in Dresden UFSAR Section 11.5.

10.1.2.7 Chemical Cleaning Building Chimney Monitor

The monitor has charcoal and particulate filters which are used to sample for iodine and particulates.

No automatic isolation, control functions or alarm functions are performed by this monitor.

10.1.3 Alarm and Trip Setpoints

10.1.3.1 Setpoint Calculations

10.1.3.1.1 Reactor Building Vent Monitors

The alarm setpoint for the reactor building vent monitor is established at 10 mr/hr.

10.1.3.1.2 Condenser Air Ejector Monitors

The high-high trip setpoint is established at ≤ 100 μCi/Sec per MWt (≅2.5E5μCi/sec) and the high alarm is established at ≤ 50μCi/sec per MWt (≅1.25E5μCi/sec).

10.1.3.1.3 Units 2/3 Plant Chimney Radiation Monitor

The setpoint is established at a count rate corresponding to no greater than 105,000 μCi/sec.

10.1.3.2 Release Limits

Alarm and trip setpoints of gaseous effluent monitors are established to ensure that the release rate limits of RETS are not exceeded. The release limits are found by solving Equations 10-1 and 10-2 for the total allowed release rate, Q_{tv}.

$$(1.11)\ \Sigma\{\ f_i[Q_{ts}S_i + Q_{tv}V_i]\} < 500\text{mrem/yr} \qquad (10\text{-}1)$$

$$\Sigma\ \{(\overline{L_i}f_i[(X/Q)_s\ Q_{ts}\ \exp(-\lambda_i R/3600u_s)$$

$$+\ (X/Q)_v Q_{tv}\exp-(\lambda_i R/3600u_v)] \qquad (10\text{-}2)$$

$$+(1.11)(f_i)[Q_{ts}S_i + Q_{tv}V_i]\}$$

$$< 3000\text{mrem/yr}$$

The summations are over noble gas radionuclides i.

f_i Fractional Radionuclide Composition
The release rate of noble gas radionuclide i divided by the total release rate of all noble gas radionuclides.

Q_{ts} Total allowed Release Rate, Stack Release [µCi/sec]
The total allowed release rate of all noble gas radionuclides released as stack releases.

Q_{tv} Total Allowed Release Rate, Vent Release [µCi/sec]
The total allowed release rate of all noble gas radionuclides released as vent releases.

Refer to Section A.1 of Appendix A for the definitions of the remaining parameters.

Equation 10-1 is based on Equation A-8 of Appendix A and the RETS restriction on whole body dose rate (500 mrem/yr) due to noble gases released in gaseous effluents (see Section A.1.3.1 of Appendix A). Equation 10-2 is based on Equation A-9 of Appendix A and the RETS restriction on skin dose rate (3000 mrem/yr) due to noble gases released in gaseous effluents (see Section A.1.3.2 of Appendix A).

Calibration methods and surveillance frequency for the monitors will be conducted as specified in the RETS.

10.1.3.3 Release Mixture

In the determination of alarm and trip setpoints the radioactivity mixture in the exhaust air is assumed to have the following compositions.

- Reactor building vent effluent monitors.

  The mixture used for the GE monitors is taken from a representative isotopic analysis of the vent stack noble gas released since the last calibration, or based on nominal response of detector. The "mixture" used for the SPING is assumed to be a single pseudo-noble gas radionuclide.

- Condenser air ejector monitor.

  The mixture used for this monitor is taken from a representative isotopic analysis of noble gases collected at the recombiner outlet during plant operation, since the last alarm setpoint calculation.

- Units 2/3 plant chimney monitors.

  The mixture used for the GE monitors is taken from the most recent isotopic analysis of noble gases collected from the chimney monitor which corresponds to an above background recorder reading. The "mixture" used for the SPING is assumed to be a single pseudo-noble gas radionuclide.

10.1.3.4 Conversion Factors

The conversion factors used to establish gaseous effluent monitor setpoints are obtained as follows.

- Reactor building vent effluent monitor.

  For the GE monitors, the isotopic analysis in Section 10.1.3.3 and the monitor reading (in mR/hr) at the time of the analysis or nominal response of detector are used to establish the conversion factor in mR/hr per $\mu Ci/cc$ or $\mu Ci/ft^3$. For the SPING the conversion factor is based on the 0.8 MeV gamma of the pseudo-noble gas radionuclide.

- Condenser air ejector monitor.

  The isotopic analysis in Section 10.1.3.3 and the flow and monitor reading (in mR/hr) at the time of the analysis are used to establish the conversion factor in mR/hr per $\mu Ci/cc$ or $\mu Ci/ft^3$.

- Units 2/3 plant chimney monitors

  For the GE monitors, the isotopic analysis in Section 10.1.3.3 and flow and monitor reading (in CPS) at the time of the analysis are used to establish the conversion factor in CPS per $\mu Ci/cc$ or $\mu Ci/ft^3$. For the SPING the conversion factor is based on the 0.8 MeV gamma of the pseudo-noble gas radionuclide.

10.1.3.5 HVAC Flow Rates

The HVAC exhaust flow rates are obtained from either the Units 2/3 process computers or the SPING control station. For the 2/3 Chimney, additional process flow rates must be added to obtain the total chimney flow (see Figure 10-2). Unit operation may affect actual flow rates which therefore may differ from values listed. If the actual flows are not available, the following default values based on design flow can be used:

Units 2/3 Chimney Air Flow	1.25E10 cc/min
Units 2/3 Combined Reactor Vent	6.23E9 cc/min
Unit 1 Chimney Air Flow	9.46E8 cc/min
Unit 1 Chemical Cleaning Chimney Air Flow	1.61E9 cc/min

10.1.4 Allocation of Effluents from Common Release Points

Radioactive particulates and iodine released from the Unit 1 Chemical Cleaning Chimney originate from the Chemical Cleaning Building and Interim Radwaste Storage Facility.

Radioactive gases, particulates, and iodines released from the Unit 1 chimney originate from Unit 1 only. However, radioactive gaseous effluents released from Units 2/3 are comprised of contributions from both units. Estimates of noble gas contributions from Units 2 and 3 are allocated considering appropriate operating conditions and measured SJAE off-gas activities. Allocation of radioiodine and radioactive particulate releases to Units 2 or 3 specifically is not as practical and is influenced greatly by in-plant leakage. Under normal operating conditions, allocation is made using reactor coolant iodine activities. During unit shutdowns or periods of known major in-plant leakage, the apportionment is adjusted accordingly. The allocation of effluents is estimated on a monthly basis.

10.1.5 Dose Projections

Because the gaseous releases are continuous, the doses are routinely calculated in accordance with the RETS.

10.2 LIQUID RELEASES

10.2.1 System Description

A simplified liquid radwaste and liquid effluent flow diagram is provided in Figure 10-3.

The liquid radwaste treatment system is designed and installed to reduce radioactive liquid effluents by collecting the liquids, providing for retention or holdup, and providing for treatment by evaporator, demineralizer, filter, and further vendor processing systems for the purpose of reducing the total radioactivity prior to reuse or release to the environment. The system is described in the Dresden UFSAR Section 11.2.

10.2.1.1 Unit 1 Storage Tanks

Liquid radioactive effluents are not released from Unit 1 Storage tanks directly to the environment but are made through the Units 2/3 radwaste system.

10.2.1.2 Units 2/3 Waste Sample Tanks

There are three waste sample tanks (33,000 gallons each) which receive water from the liquid waste treatment system. These tanks are transferred to the waste surge tank for discharge to the Illinois River via the discharge canal.

10.2.1.3 Units 2/3 Floor Drain Sample Tanks

There are two floor drain sample tanks (22,000 gallons each) which receive liquid waste from the floor drain treatment system. These tanks are transferred to the waste surge tank or discharged to the Illinois River via the discharge canal.

10.2.1.4 Units 2/3 Waste Surge Tank

The waste surge tank receives processed water from the waste sample tanks and floor drain sample tanks. This tank discharges to the Illinois River via the discharge canal.

10.2.2 Radiation Monitors

10.2.2.1 Liquid Radwaste Effluent Monitor

The monitor is used to monitor releases from the waste surge tank, floor drain sample tanks or portable waste treatment system tanks. On high alarm, a grab sample of the effluent is automatically taken from the discharge side of the sample chamber after a 0 to 60 second delay determined by a locally mounted timer. The release is terminated manually by initiating closure of the low flow or high flow discharge line valves.

Pertinent information on the monitor and associated control devices is provided in the Dresden UFSAR Section 11.5.

10.2.2.2 Units 2 & 3 Service Water Effluent Monitors

The monitors continuously monitor the service water effluent. On high alarm a grab sample is taken.

Pertinent information on these monitors is provided in the Dresden UFSAR Section 11.5..

10.2.3 Alarm and Trip Setpoints

10.2.3.1 Setpoint Calculations

Alarm and trip setpoints of liquid effluent monitors at the principal release points are established to ensure that the limits of 10CFR20 are not exceeded in the unrestricted area.

10.2.3.1.1 Liquid Radwaste Effluent Monitor

The monitor setpoint is found by solving equation 10-3 for the total isotopic activity.

$$P \leq K \times (\Sigma C_i^T / \Sigma(C_i^T / DWC_i)) \times ((F^d + F'_{max}) / F'_{max}) \quad (10\text{-}3)$$

P	Release Setpoint	[cpm]
C_i^T	Concentration of radionuclide i in the release tank	[µCi/ml]
F'_{max}	Maximum Release Tank Discharge Flow Rate The flow rate from the radwaste discharge tank. The maximum pump discharge rate of 250 gpm is used for calculating the setpoint.	[gpm]
K	Calibration constant	[cpm/µCi/ml]
DWC_i	Derived Water Concentration (also referred to as Effluent Concentration Limit, ECL) of Radionuclide i (Maximum Permissible Concentration (MPC)) Radionuclide i is 10 times the concentration given in Appendix B, Table 2, Column 2 to 10CFR20.1001-2402.	[µCi/ml]
F^d	Dilution Flow	[gpm]

10.2.3.1.2 Units 2 & 3 Service Water Effluent Monitor

The monitor setpoint is established at two times the background radiation value.

10.2.3.2 Discharge Flow Rates

10.2.3.2.1 Release Tank Discharge Flow Rate

Prior to each batch release, a grab sample is obtained.

The results of the analysis of the sample determine the discharge rate of each batch as follows:

$$F^r_{max} = 0.2(F^d/\Sigma(C_i/DWC_i)) \text{ (Maximum Permissible Concentration (MPC))} \quad \text{(10-4)}$$

Revision 3
October 2003

The summation is over radionuclides i.

0.2 Reduction factor for conservatism.

F^r_{max} Maximum Permitted Discharge Flow Rate [gpm]

The maximum permitted flow rate from the radwaste discharge tank. Releases are not permitted if the calculated discharge rate, F^r_{max}, is less than 250 gpm.

F^d Dilution Flow [gpm]

C_i Concentration of Radionuclide i in the Release Tank [µCi/ml]

The concentration of radioactivity in the radwaste discharge tank based on measurements of a sample drawn from the tank.

DWC_i Derived Water Concentration of Radionuclide i, Maximum Permissible Concentration (MPC) [µCi/ml]

Revision 3
October 2003

Radionuclide i is 10 times the concentration given in Appendix B, Table 2, Column 2 to 10CFR20.1001-2402.

10.2.3.3 Release Limits

REVISION 3
OCTOBER 2003

Release limits are determined from 10CFR20. Calculated maximum permissible discharge rates are divided by 5 to ensure that applicable derived water concentrations (DWC) (Maximum Permissible Concentration (MPC)) are not exceeded.

10.2.3.4 Release Mixture

For the liquid radwaste effluent monitor, the release mixture used for the setpoint determination is the radionuclide mix identified in the grab sample isotopic analysis.

For all other liquid effluent monitors, no release mixture is used because the setpoint is established at "two times background."

10.2.3.5 Conversion Factors

The readout for the liquid radwaste effluent monitor is in CPM. The calibration constant is based on the detector sensitivity to Co-60.

The readouts for the Units 2 & 3 service water effluent monitors are in μCi/ml. The calibration constants are based on the detector sensitivity to Co-60.

10.2.3.6 Liquid Dilution Flow Rates

The dilution flow is determined using the installed flowmeter in the discharge canal.

10.2.4 Allocation of Effluents from Common Release Points

Radioactive liquid effluents released from the release tanks are comprised of contributions from all three units. Under normal operating conditions, it is difficult to apportion the radioactivity between the units. Consequently, allocation is normally made evenly between units 2 and 3.

10.2.5 Projected Doses for Releases

Doses due to liquid effluents are calculated in accordance with the RETS.

10.3 SOLIDIFICATION OF WASTE/PROCESS CONTROL PROGRAM

The process control program (PCP) contains the sampling, analysis, and formulation determination by which solidification of radioactive wastes from liquid systems is ensured.

Figure 10-4 is a simplified diagram of solid radwaste processing.

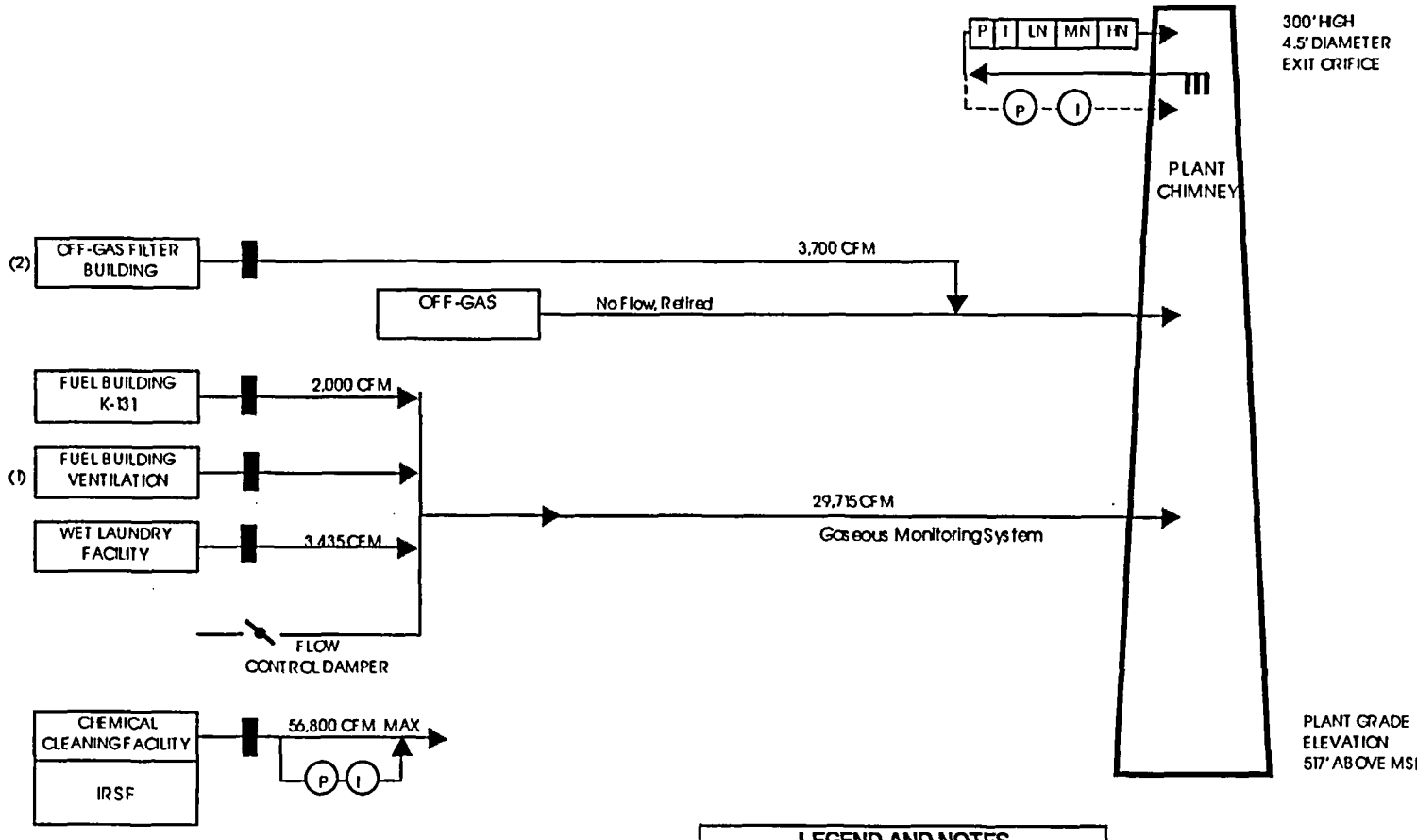

LEGEND AND NOTES

- HEPA FILTER
- P — PARTICULATE SAMPLE
- I — IODINE SAMPLE
- P I LN — FLOW THROUGH RADIATION MONITOR: P=PARTICULATE, I=IODINE, LN, MN, HN=LOW, MEDIUM & HIGH RANGE NOBLE GAS

NOTES:
1. UNIT 1 IS NOT OPERATIONAL
2. ALL FLOW RATES ARE DESIGN FLOW RATES, NOT ACTUAL

(1) 8,000 CFM summer
4,000 CFM winter

(2) Normally Operated In Winter Only

OFFSITE DOSE CALCULATION MANUAL
DRESDEN STATION UNIT 1

FIGURE 10-1

SIMPLIFIED GASEOUS RADWASTE AND GASEOUS EFFLUENT FLOW DIAGRAM

d10r2-2.doc

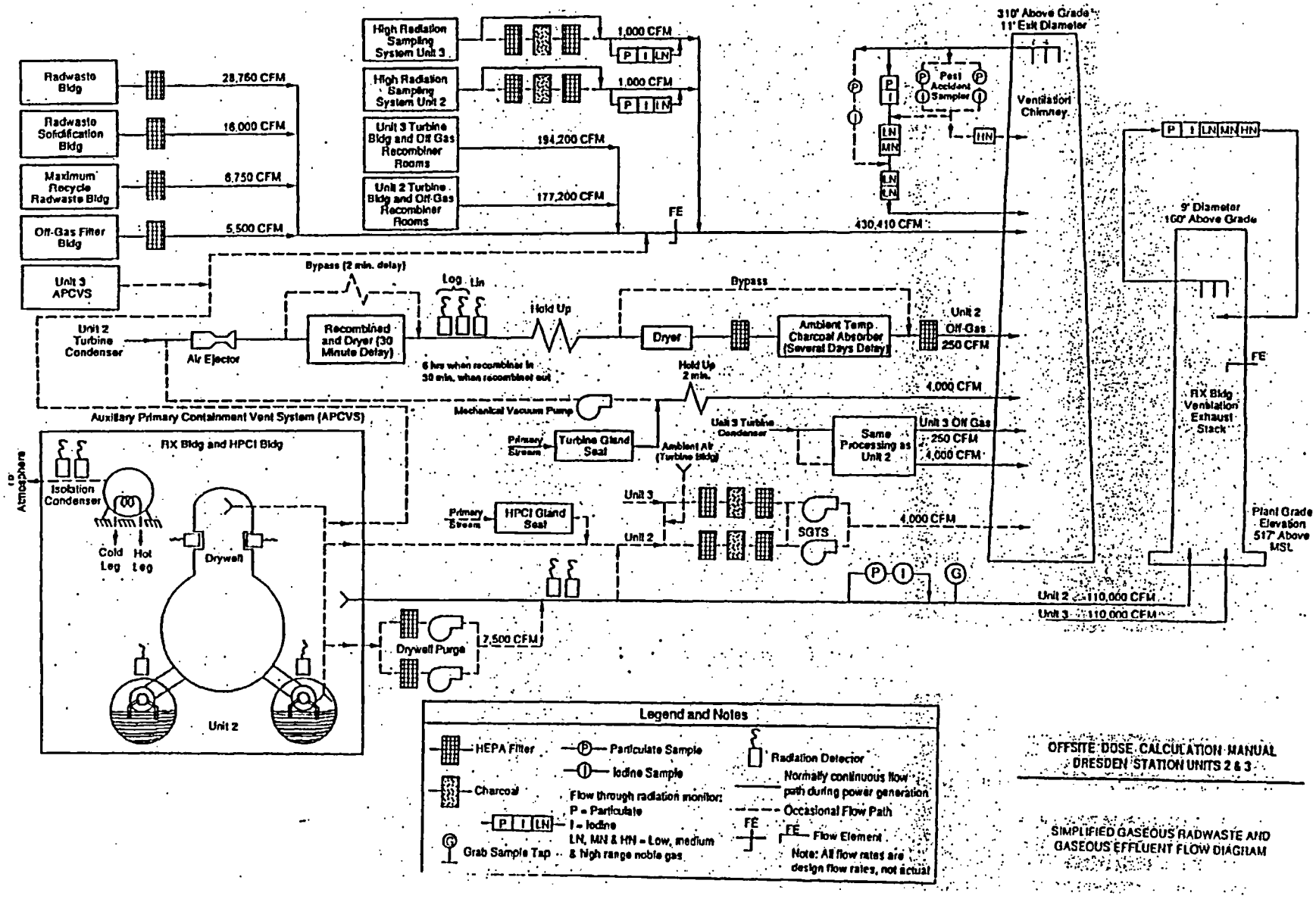
Radwaste Bldg
28,760 CFM
Radwaste Solidification Bldg
16,000 CFM
Maximum Recycle Radwaste Bldg
6,750 CFM
Off-Gas Filter Bldg
5,500 CFM
Unit 3 APCVS
High Radiation Sampling System Unit 3
1,000 CFM
High Radiation Sampling System Unit 2
1,000 CFM
Unit 3 Turbine Bldg and Off Gas Recombiner Rooms
194,200 CFM
Unit 2 Turbine Bldg and Off-Gas Recombiner Rooms
177,200 CFM
FE
430,410 CFM
310' Above Grade
11' Exit Diameter
Post Accident Sampler
Ventilation Chimney
9' Diameter
160' Above Grade
Bypass (2 min. delay)
Log Lin
Hold Up
Bypass
Unit 2 Turbine Condenser
Air Ejector
Recombiner and Dryer (30 Minute Delay)
6 hrs when recombiner in
30 min. when recombiner out
Dryer
Ambient Temp. Charcoal Absorber (Several Days Delay)
Unit 2 Off-Gas 250 CFM
Hold Up 2 min.
4,000 CFM
Mechanical Vacuum Pump
Auxiliary Primary Containment Vent System (APCVS)
Primary Steam
Turbine Gland Seal
Ambient Air (Turbine Bldg)
Unit 3 Turbine Condenser
Same Processing as Unit 2
Unit 3 Off Gas 250 CFM
4,000 CFM
RX Bldg and HPCI Bldg
Isolation Condenser
Cold Leg
Hot Leg
Drywell
Primary Steam
HPCI Gland Seal
Unit 3
Unit 2
SGTS
4,000 CFM
Unit 2 110,000 CFM
Unit 3 110,000 CFM
Drywell Purge
7,500 CFM
Unit 2
RX Bldg Ventilation Exhaust Stack
Plant Grade Elevation 517' Above MSL
Legend and Notes
HEPA Filter
Charcoal
Grab Sample Tap
Particulate Sample
Iodine Sample
Flow through radiation monitor:
P = Particulate
I = Iodine
LN, MN & HN = Low, medium & high range noble gas
Radiation Detector
Normally continuous flow path during power generation
Occasional Flow Path
Flow Element
Note: All flow rates are design flow rates, not actual
OFFSITE DOSE CALCULATION MANUAL
DRESDEN STATION UNITS 2 & 3
SIMPLIFIED GASEOUS RADWASTE AND GASEOUS EFFLUENT FLOW DIAGRAM

d10r2-2.doc

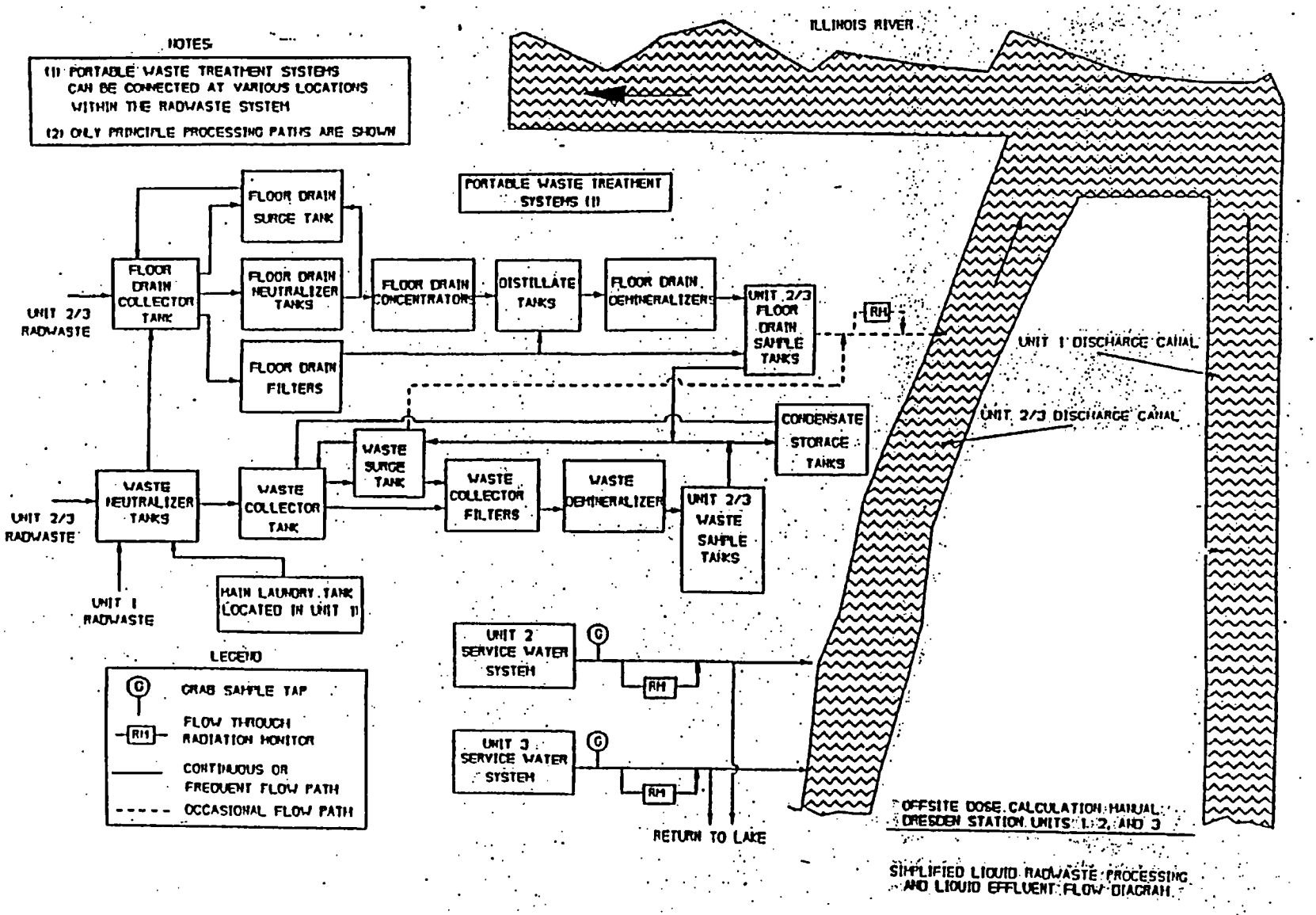
NOTES
(1) PORTABLE WASTE TREATMENT SYSTEMS CAN BE CONNECTED AT VARIOUS LOCATIONS WITHIN THE RADWASTE SYSTEM
(2) ONLY PRINCIPLE PROCESSING PATHS ARE SHOWN
ILLINOIS RIVER
PORTABLE WASTE TREATMENT SYSTEMS (1)
FLOOR DRAIN SURGE TANK
FLOOR DRAIN COLLECTOR TANK
FLOOR DRAIN NEUTRALIZER TANKS
FLOOR DRAIN FILTERS
FLOOR DRAIN CONCENTRATOR
DISTILLATE TANKS
FLOOR DRAIN DEMINERALIZER
UNIT 2/3 FLOOR DRAIN SAMPLE TANKS
UNIT 2/3 RADWASTE
RM
UNIT 1 DISCHARGE CANAL
UNIT 2/3 DISCHARGE CANAL
CONDENSATE STORAGE TANKS
WASTE SURGE TANK
WASTE NEUTRALIZER TANKS
WASTE COLLECTOR TANK
WASTE COLLECTOR FILTERS
WASTE DEMINERALIZER
UNIT 2/3 WASTE SAMPLE TANKS
UNIT 2/3 RADWASTE
UNIT 1 RADWASTE
MAIN LAUNDRY TANK LOCATED IN UNIT 1
UNIT 2 SERVICE WATER SYSTEM
UNIT 3 SERVICE WATER SYSTEM
RETURN TO LAKE
LEGEND
G GRAB SAMPLE TAP
R11 FLOW THROUGH RADIATION MONITOR
CONTINUOUS OR FREQUENT FLOW PATH
OCCASIONAL FLOW PATH
OFFSITE DOSE CALCULATION MANUAL DRESDEN STATION UNITS 1, 2, AND 3
SIMPLIFIED LIQUID RADWASTE PROCESSING AND LIQUID EFFLUENT FLOW DIAGRAM

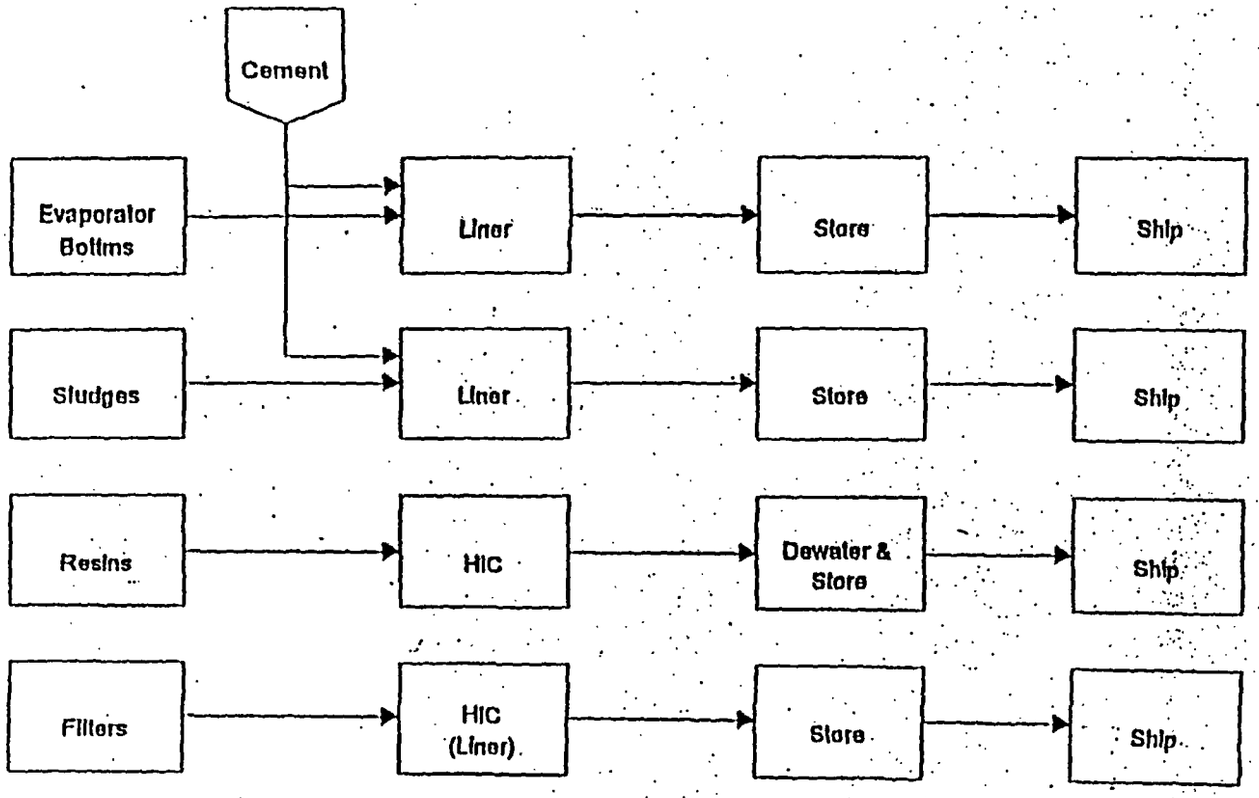

OFFSITE DOSE CALCULATION MANUAL
DRESDEN STATION UNITS 2 AND 3

SIMPLIFIED SOLID RADWASTE PROCESSING DIAGRAM

CHAPTER 11

DRESDEN ANNEX INDEX

Revision 2

CHAPTER 11

RADIOLOGICAL ENVIRONMENTAL MONITORING PROGRAM

TABLE OF CONTENTS

CHAPTER	TITLE	PAGE
11	Radiological Environmental Monitoring Program	11-1

LIST OF TABLES

NUMBER	TITLE	PAGE
11-1	Radiological Environmental Monitoring Program	11-2

LIST OF FIGURES

NUMBER	TITLE	PAGE
11-1	Fixed Air Sampling and TLD Sites and Outer Ring TLD Locations	11-9
11-2	Inner Ring TLD Locations and Near Station Water Sample Locations	11-10

CHAPTER 11
RADIOLOGICAL ENVIRONMENTAL MONITORING PROGRAM

The Radiological Environmental Monitoring Program for the environs around Dresden Station is given in Table 11-1.

Figures 11-1 and 11-2 show general sampling and monitoring locations.

Table 11-1
Radiological Environmental Monitoring Program

Exposure Pathway and/or Sample	Sample or Monitoring Location[6]	Sampling or Collection Frequency	Type and Frequency of Analysis
1. Airborne Radioiodine and Particulates	a. Indicators-Near Field D-04, Collins Road, 0.9 mi W (1.4 km N) D-07, Clay Products, 2.0 mi S (3.2 km J) D-45, McKinley Woods Rd, 1.5 mi ENE (2.4 km D) D-53, Grundy County Road, 2.1 mi SSE (3.2 km H) b. Indicators-Far Field D-08, Prairie Parks, 4.0 ,I SW (6.4 km L) D-10, Goose Lake Village, 3.8 mi SSW (6.1 km K) D-13, Minooka, 4.5 mi N (7.2 km A) D-14, Channahon, 3.5 mi NE (5.6 km C) c. Controls D-12, Lisbon, 10.0 mi NW (16.0 km Q) d. Special[8] D-01, Onsite Station 1, 0.6 mi NW (1.0 km Q) D-02, Onsite Station 2, 0.3 mi NE (0.5 km C) D-03, Onsite Station 3, 0.4 mi S (0.6 km J)	Continuous sampler operation with particulate sample collection weekly, or more frequently if required by dust loading, and radioiodine canister collection biweekly.	Radioiodine Canisters: I-131 analysis biweekly on near field and control samples[1]. Particulate Sampler[7]: Gross beta analysis following weekly filter change[2] and gamma isotopic analysis[3] quarterly on composite filters by location on near field and control samples.[1]

REVISION 2
OCTOBER 2003

Table 11-1 (Cont'd)
Radiological Environmental Monitoring Program

Exposure Pathway and/or Sample	Sample or Monitoring Location[6]	Sampling or Collection Frequency	Type and Frequency of Analysis
2. Direct Radiation	a. Indicators-Inner Ring D-101-1, 1.0 mi N (1.6 km A) D-101-2, 1.0 mi N (1.6 km A) D-102-1, 1.3 mi NNE (2.1 km B) D-102-2, 1.3 mi NNE (2.1 km B) D-103-1, 1.2 mi NE (1.9 km C) D-103-2, 1.2 mi NE (1.9 km C) D-104-1, 1.5 mi ENE (2.4 km D) D-104-2, 1.5 mi ENE (2.4 km D) D-105-1, 1.4 mi E (2.2 km E) D-105-2, 1.4 mi E (2.2 km E) D-106-1, 0.9 mi ESE (1.4 km F) D-106-2, 0.9 mi ESE (1.4 km F) D-107-1, 1.3 mi SE (2.1 km G) D-107-2, 1.3 mi SE (2.1 km G) D-108-1, 1.9 mi SSE (3.0 km H) D-108-2, 1.9 mi SSE (3.0 km H) D-109-1, 0.8 mi S (1.3 km J) D-109-2, 0.8 mi S (1.3 km J) D-110-3, 0.8 mi SSW (1.3 km K) D-110-4, 0.8 mi SSW (1.3 km K) D-111-1, 0.6 mi SW (1.0 km L) D-111-2, 0.6 mi SW (1.0 km L) D-112a-1, 0.8 mi WSW (1.3 km M) D-112a-2, 0.8 mi WSW (1.3 km M) D-113-1, 0.9 mi W (1.4 km N) D-113-2, 0.9 mi W (1.4 km N) D-114-1, 1.0 mi WNW (1.6 km P) D-114-2, 1.0 mi WNW (1.6 km P) D-115-1, 0.8 mi NW (1.3 km Q) D-115-2, 0.8 mi NW (1.3 km Q) D-116-1, 1.0 mi NNW (1.6 km R) D-116-2, 1.0 mi NNW (1.6 km R)	Quarterly	Gamma dose on each TLD quarterly.

Table 11-1 (Cont'd)
Radiological Environmental Monitoring Program

Exposure Pathway and/or Sample	Sample or Monitoring Location[6]	Sampling or Collection Frequency	Type and Frequency of Analysis
2. Direct Radiation (Cont'd)	b. Indicators-Outer Ring D-201-1, 4.5 mi N (7.2 km A) D-201-2, 4.5 mi N (7.2 km A) D-202-1, 5.0 mi NNE (8.0 km B) D-202-2, 5.0 mi NNE (8.0 km B) D-203-1, 4.5 mi NE (7.2 km C) D-203-2, 4.5 mi NE (7.2 km C) D-204-1, 5.0 mi ENE (8.0 km D) D-204-2, 5.0 mi ENE (8.0 km D) D-205-1, 4.2 mi E (6.7 km E) D-205-2, 4.2 mi E (6.7 km E) D-206-1, 3.5 mi ESE (5.6 km F) D-206-2, 3.5 mi ESE (5.6 km F) D-207-1, 4.5 mi SE (7.2 km G) D-207-2, 4.5 mi SE (7.2 km G) D-208-1, 5.0 mi SSE (8.0 km H) D-208-2, 5.0 mi SSE (8.0 km H) D-209-1, 5.0 mi S (8.0 km J) D-209-2, 5.0 mi S (8.0 km J) D-210-1, 4.8 mi SSW (7.7 km K) D-210-2, 4.8 mi SSW (7.7 km K) D-211-1, 5.0 mi SW (8.0 km L) D-211-2, 5.0 mi SW (8.0 km L) D-212-3, 6.0 mi WSW (9.7 km M) D-212-4, 6.0 mi WSW (9.7 km M) D-213-1, 4.5 mi W (7.2 km N) D-213-2, 4.5 mi W (7.2 km N) D-214-1, 4.5 mi WNW (7.2 km P) D-214-2, 4.5 mi WNW (7.2 km P) D-215-1, 5.1 mi NW (8.2 km Q) D-215-2, 5.1 mi NW (8.2 km Q) D-216-1, 4.8 mi NNW (7.7 km R) D-216-2, 4.8 mi NNW (7.7 km R)		

Table 11-1 (Cont'd)
Radiological Environmental Monitoring Program

Exposure Pathway and/or Sample	Sample or Monitoring Location[6]	Sampling or Collection Frequency	Type and Frequency of Analysis
2. Direct Radiation (Cont'd)	c. Other Indicators One at each of the airborne location given in part 1.a and 1.b. d. Controls One at each airborne control location given in part 1.c.		

Table 11-1 (Cont'd)
Radiological Environmental Monitoring Program

Exposure Pathway and/or Sample	Sample or Monitoring Location[6]	Sampling or Collection Frequency	Type and Frequency of Analysis
3. Waterborne			
a.. Ground/Well	a. Indicators D-23, Thorsen Well, 0.7 mi S (1.1 km J) D-35, Dresden Lock & Dam, 0.5 mi NW (0.8 km Q)	Quarterly	Gamma isotopic[3] and tritium analysis quarterly.
b. Drinking Water	There is no drinking water pathway within 6.2 mi downstream of station.		
c. Surface Water	a. Indicator D-51, Dresden Lock & Dam, 0.5 mi NW (0.8 km Q)	Weekly grab sample	Gross beta and gamma isotopic analysis[3] on monthly composite; tritium analysis on quarterly composite.
d. Control	a. Control D-52, DesPlaines River, 0.9 mi ESE (1.4 km F) D-54, Kankakee River, 8.5 mi SE (13.7 km G)	Weekly grab sample	Gross beta and gamma isotopic analysis[3] on monthly composite; tritium analysis on quarterly composite.
e. Sediments	a. Indicator D-27, Dresden Lock & Dam, 0.5 mi NW (0.8 km Q)	Semiannually	Gamma isotopic analysis[3] semiannually.
f. Dredging Spoils	a. Indicator One sample from each major dredging of Illinois River within 1 mile downstream of station discharge point.	Annually[9]	Gamma isotopic[3] Annually[9]

Revision 2
October 2003

Table 11-1 (Cont'd)
Radiological Environmental Monitoring Program

Exposure Pathway and/or Sample	Sample or Monitoring Location[6]	Sampling or Collection Frequency	Type and Frequency of Analysis
4. Ingestion			
a. Milk	a. Indicators There are no dairies within 6.2 miles of the station. b. Control D-25, Vince Biros Farm, 11.5 mi SW (18.5 km L)	Biweekly: May through October; Monthly: November through April	Gamma isotopic[(3)] and I-131 analysis[(4)] on each sample.
b. Fish[5]	a. Indicator D-28, Dresden Pool of Illinois River, 0.5 mi NW (0.8 km Q) b. Control D-46, DesPlaines River upstream of discharge, 0.9 mi E (1.4 km E)	Two times annually	Gamma isotopic analysis[3] on edible portions of each
c. Food Products	a. Indicators Two samples from each of the four major quadrants within 6.2 miles of the station. Sample locations for food products may vary based on availability and therefore are not required to be identified here but shall be taken, if available. b. Controls Two samples within 9.3 to 18.6 miles of the station.	Annually	Gamma isotopic analysis[3] each sample.

Table 11-1 (Cont'd)
Radiological Environmental Monitoring Program

1 Far field samples are analyzed when near field results are inconsistent with previous measurements and radioactivity is confirmed as having its origin in airborne effluents released from the station, or at the discretion of the Radiation Protection Director.

2 Airborne particulate sample filters shall be analyzed for gross beta radioactivity 24 hours or more after sampling to allow for radon and thoron daughter decay. If gross beta activity in air particulate samples is greater than 10 times the yearly mean of control samples, gamma isotopic analysis shall be performed on the individual samples.

3 Gamma isotopic analysis means the identification and quantification of gamma emitting radionuclides that may be attributable to the effluents from the station.

4 I-131 analysis means the analytical separation and counting procedure are specific for this radionuclide.

5. The fish monitoring locations are not identified exactly on the map. The points, D-28 and D-46, represent the general area where the samples are taken.

6. Distances provided for sampling/monitor locations are approximate.

7. The analysis requirements listed are for the REMP-required samples only. The special samples require only quarterly gamma isotopic analyses on the composite filters.

8. These sampling locations do not constitute REMP samples, but are special samples required per Section 11.5.1.10 of the UFSAR. They may be discontinued pending revision of the aforementioned section.

9. Illinois River dredge spoils sampling is not required if dredging within 1 mile of Dresden Station river discharge point has not occurred since last sample collection. Individual areas where spoils are deposited do not require sampling if no additions were made to that area since last sample collection.

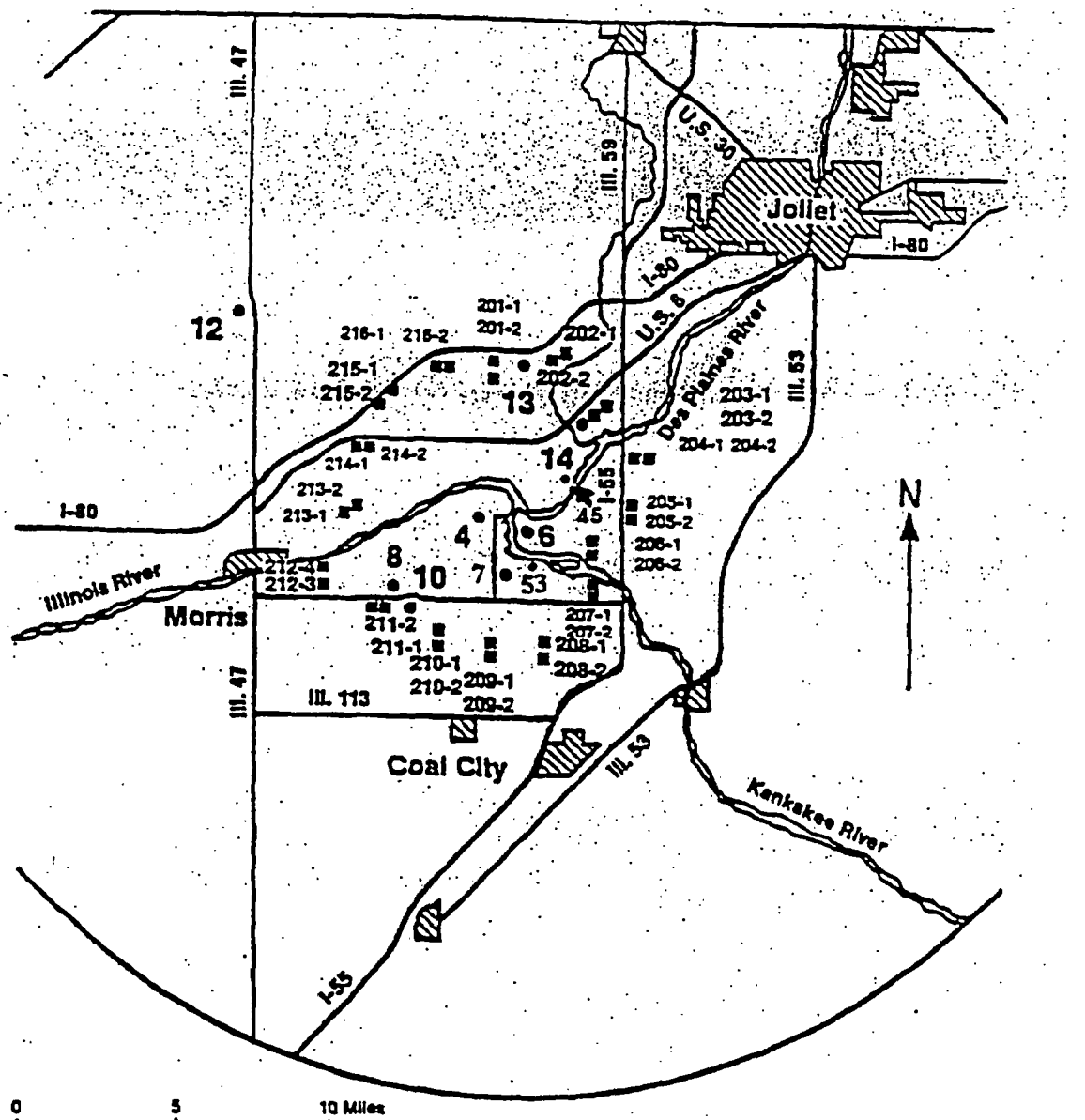

OFFSITE DOSE CALCULATION MANUAL
DRESDEN STATION UNITS 1, 2, & 3

FIXED AIR SAMPLING AND TLD SITES AND OUTER RING TLD LOCATIONS

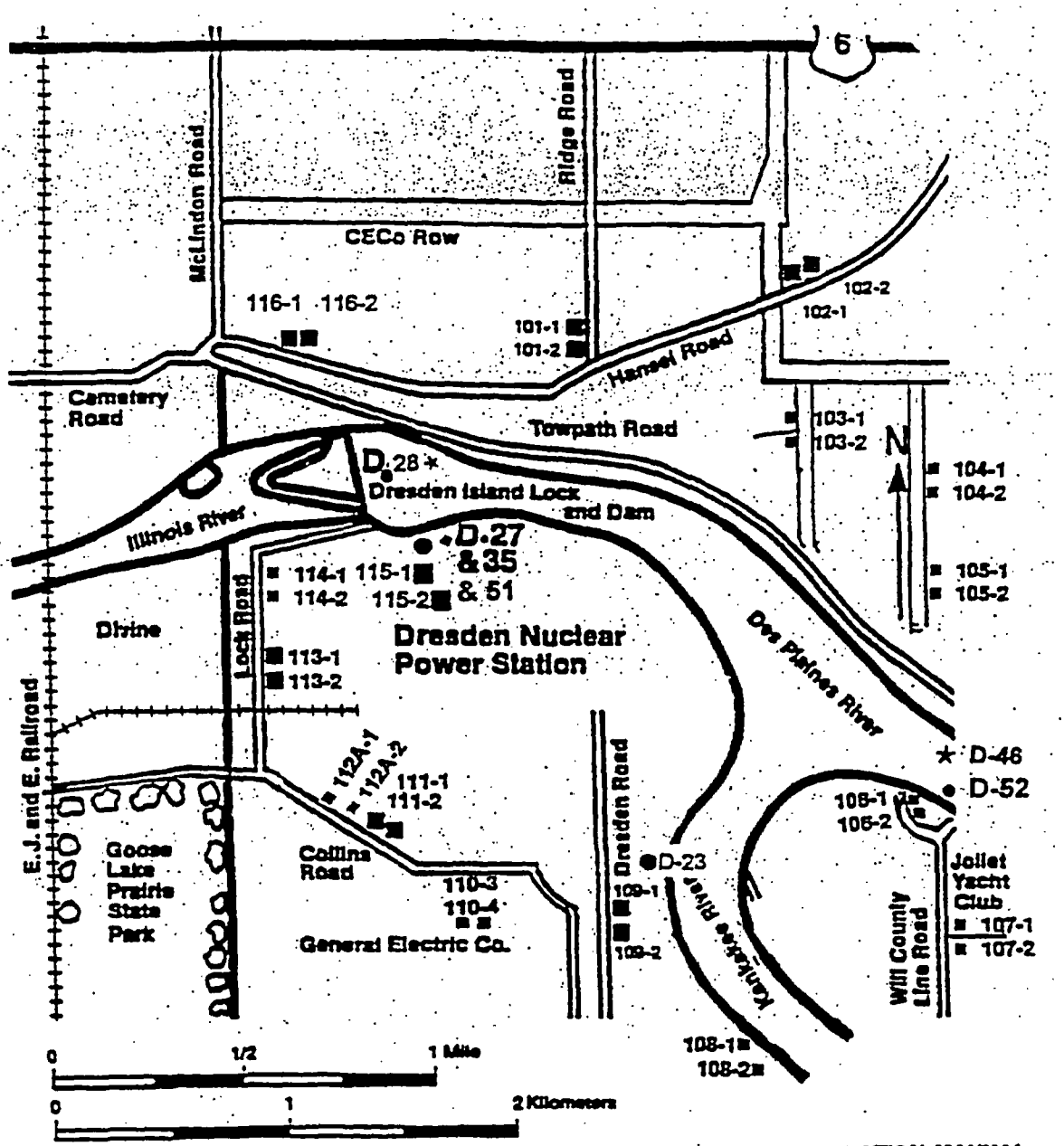

OFFSITE DOSE CALCULATION MANUAL
DRESDEN STATION UNITS 1, 2, & 3

INNER RING TLD LOCATIONS AND
NEAR STATION WATER SAMPLE LOCATIONS

CHAPTER 12.0

SPECIAL NOTE

The requirements of the Technical Specifications shall take precedence over this chapter, should any differences occur.

The transfer of the Radiological Effluent Technical Specifications (RETS) to the ODCM for Unit 1 has been approved by the Nuclear Regulatory Commission in Amendment 39.

The transfer of the Radiological Effluent Technical Specifications (RETS) to the ODCM for Units 2 and 3 has been approved by the Nuclear Regulatory Commission in Amendments 150 and 145.

CHAPTER 12

DRESDEN ANNEX INDEX

Revision 5

CHAPTER 12
RADIOLOGICAL EFFLUENT TECHNICAL STANDARDS (RETS)
TABLE OF CONTENTS

		PAGE
12.1	DEFINITIONS	12-1
12.2	INSTRUMENTATION	12-6
	A. Radioactive Liquid Effluent Monitoring Instrumentation	12-6
	1. Radioactive Liquid Effluent Monitoring Instrumentation Operability	12-6
	2. Radioactive Liquid Effluent Monitoring Instrumentation Surveillance	12-6
	B. Radioactive Gaseous Effluent Monitoring Instrumentation	12-6
	1. Radioactive Gaseous Effluent Monitoring Instrumentation Operability	12-6
	2. Radioactive Gaseous Effluent Monitoring Instrumentation Surveillance	12-7
	C. Liquid and Gaseous Effluents Instrumentation Bases	12-18
12.3	LIQUID EFFLUENTS	12-19
	A. Liquid Effluents Limits and Reporting Operability	12-19
	1. Concentration in Unrestricted Areas	12-19
	2. Dose from Liquid Effluents	12-19
	3. Dose Projections	12-20
	4. Liquid Radioactive Waste Treatment System	12-21
	5. System Operability and Plant Operations	12-21
	B. Liquid Effluents Surveillance	12-21
	1. Concentration in Unrestricted Areas	12-21
	2. Dose from Liquid Effluents	12-22
	3. Dose Projections	12-22
	C. Liquid Effluents Bases	12-29
	1. Concentration	12-29
	2. Dose	12-29
	3. Liquid Waste Treatment	12-29
	4. Mechanical Vacuum Pump	12-30
12.4	GASEOUS EFFLUENTS	12-31
	A. Gaseous Effluents Limits and Reporting Operability	12-31
	1. Dose Rate	12-31
	2. Noble Gas Dose	12-31
	3. Iodine-131, Iodine-133, Tritium and Particulate Dose	12-32
	4. Off-Gas Treatment	12-33
	5. Main Condenser Air Ejector	12-34
	6. System Operability and Plant Operations	12-34
	B. Gaseous Effluents Surveillance	12-35
	1. Dose Rate	12-35
	2. Noble Gas Dose	12-35
	3. Iodine-131, Iodine-133, Tritium and Particulate Dose	12-35
	4. Off-Gas Treatment	12-35
	5. Noble Gases at the Main Condenser Air Ejector	12-36

CHAPTER 12

RADIOLOGICAL EFFLUENT TECHNICAL STANDARDS (RETS) TABLE OF CONTENTS CONTINUED

		PAGE
12.4	**GASEOUS EFFLUENTS** (Cont'd)	
C.	Gaseous Effluents Bases	12-42
1.	Gaseous Effluents, Dose	12-42
2.	Dose, Noble Gases	12-42
3.	Dose, Radioiodines, Radioactive Material in Particulate Form and Radionuclides Other than Noble Gases	12-43
4.	Gaseous Waste Treatment	12-43
12.5	**RADIOLOGICAL ENVIRONMENTAL MONITORING PROGRAM**	12-44
1.	Monitoring Program	12-44
2.	Land Use Census	12-58
3.	Interlaboratory Comparison Program	12-59
12.6	**RECORDKEEPING AND REPORTING**	12-60
1.	Station Operating Records	12-60
2.	Reports	12-60
1.	Radioactive Effluent Release Report	12-60
2.	Annual Radiological Environmental Operating Report	12-61
3.	Non-Routine Environmental Report	12-62
3.	Offsite Dose Calculation Manual (ODCM)	12-62
4.	Major Changes to Radioactive Waste Treatment Systems (Liquid and Gaseous)	12-63

CHAPTER 12

RADIOLOGICAL EFFLUENT TECHNICAL STANDARDS (RETS) LIST OF TABLES

NUMBER	TITLE	PAGE
12.1-1	Surveillance Frequency Notation	12-4
12.1-2	Modes	12-5
12.2-1	Radioactive Liquid Effluent Monitoring Instrumentation	12-8
12.2-2	Radioactive Liquid Effluent Monitoring Instrumentation Surveillance Requirements	12-9
12.2-3	Radioactive Gaseous Effluent Monitoring Instrumentation	12-11
12.2-4	Radioactive Gaseous Effluent Monitoring Instrumentation Surveillance Requirements	12-15
12.3-1	Allowable Concentration of Dissolved or Entrained Noble Gases Released from the Site to Unrestricted Areas in Liquid Waste	12-23
12.3-2	Radioactive Liquid Waste Sampling and Analysis Program	12-24
12.4-1	Radioactive Gaseous Waste Sampling and Analysis Program	12-37
12.5-1	Radiological Environmental Monitoring Program	12-47
12.5-2	Reporting Levels for Radioactivity Concentrations in Environmental Samples Reporting Levels	12-53
12.5-3	Detection Capabilities for Environmental Sample Analysis Lower Limit of Detection	12-54

12.0 RADIOLOGICAL EFFLUENT TECHNICAL STANDARDS

12.1 DEFINITIONS

1. Channel Calibration - A Channel Calibration shall be the adjustment, as necessary, of the channel output such that it responds within the necessary range and accuracy to known values of the parameter that the channel monitors. The Channel Calibration shall encompass the entire channel, including the required sensor, alarm, display and trip functions, and shall include the Channel Functional Test. Calibration of instrument channels with resistance temperature detector (RTD) or thermocouple sensors may consist of an inplace qualitative assessment of sensor behavior and normal calibration of the remaining adjustable devices in the channel. The Channel Calibration may be performed by means of any series of sequential, overlapping, or total channel steps so that the entire channel is calibrated.

2. Channel Check - A Channel Check shall be a qualitative assessment, by observation, of channel behavior during operation. This determination shall include, where possible, comparison of the channel indication and status to other indications or status derived from independent instrument channels measuring the same parameter.

3. Channel Functional Test - A Channel Functional Test shall be the injection of a simulated or actual signal into the channel as close to the sensor as practicable to verify Operability, including required alarm, interlock, display, and trip functions, and channel failure trips. The Channel Functional Test may be performed by means of any series of sequential, overlapping, or total channel steps so that the entire channel is tested.

4. Continuous Sampling - Uninterrupted sampling with the exception of sampling interruptions of short duration (no longer than 2 hours) for required surveillances.

5. Dose Equivalent I-131 - That concentration of I-131 (microcuries/gram) that alone would produce the same thyroid dose as the quantity and isotopic mixture of I-131, I-132, I-133, I-134, and I-135 actually present. The thyroid dose conversion factors used for this calculation shall be those listed in Table III of TID -14844, AEC, 1962", Calculation of Distance Factors for Power and Test Reactor Sites"; Table E-7 of Regulatory Guide 1.109, Rev. 1, NRC, 1977; or ICRP 30, Supplement to Part 1, pages 192-212, Table titled, "Committed Dose Equivalent in Target Organs or Tissues per Intake of Unit Activity."

6. Frequency - Table 12.1-1 provides the definitions of various frequencies for which surveillances, sampling, etc., are performed unless defined otherwise. For Unit 1, each surveillance requirement shall be performed within the specified Surveillance Frequency time interval with a maximum allowable extension not to exceed 25% of the Surveillance interval. The Bases to Technical Specification SR 3.0.2 (for Units 2 and 3) provides clarification to this statement. For Units 2 and 3, the provisions of Technical Specifications SR 3.0.2 and SR 3.0.3 are applicable. The 25% Surveillance interval extension and the provisions of SR 3.0.2 and SR 3.0.3 do not apply to the Radiological Environmental Monitoring Program (Section 12.5).

7. Immediate - Immediate means that the required action should be pursued without delay in a controlled manner.

8. Member of the Public – Member of the Public means any individual except when that individual is receiving an occupational dose.

12.1 DEFINITIONS (Cont'd)

9. Mode - A Mode shall correspond to any one inclusive combination of mode switch position, average reactor coolant temperature, and reactor vessel head closure bolt tensioning specified in Table 12.1-2 with fuel in the reactor vessel.

10. Occupational Dose -The dose received by an individual in the course of employment in which the individual's assigned duties involve exposure to radiation and/or to radioactive material from licensed and unlicensed sources of radiation, whether in the possession of the licensee or other person. Occupational dose does not include dose from background radiation, as a patient from medical practices, from voluntary participation in medical research programs, or as a member of the public.

11. The Offsite Dose Calculation Manual (ODCM)

    a. The ODCM shall contain the methodology and parameters used in the calculation of offsite doses resulting from radioactive gaseous and liquid effluents, in the calculation of gaseous and liquid effluent monitoring alarm and trip setpoints, and in the conduct of the Radiological Environmental Monitoring Program.

    b. The ODCM shall also contain the radioactive effluent controls and radiological environmental monitoring activities and descriptions of the information that should be included in the Annual Radioactive Effluent Release and Radiological Environmental Operating Reports required by Sections 12.6.2.1 and 12.6.2.2.

12. Operable-Operability - A system, subsystem, division, component, or device shall be Operable or have Operability when it is capable of performing its specified safety function(s) and when all necessary attendant instrumentation, controls, normal or emergency electrical power, cooling and seal water, lubrication and other auxiliary equipment that are required for the system, subsystem, division, component, or device to perform its specified safety function(s) are also capable of performing their related support function(s).

13. The Process Control Program (PCP) – The PCP shall contain the current formulas, sampling, analyses, test, and determinations to be made to ensure that processing and packaging of solid radioactive wastes based on demonstrated processing of actual or simulated wet solid wastes will be accomplished in such a way as to assure compliance with 10 CFR Parts 20, 61, and 71, State regulations, burial ground requirements, and other requirements governing the disposal of solid radioactive waste.

14. Public Dose means the dose received by a member of the public from exposure to radiation or radioactive material released by a licensee, or to any other source of radiation under the control of a licensee. Public dose does not include occupational dose or doses received from background radiation, from any medical administration the individual has received, from exposure to individuals administered radioactive material and released in accordance with 10CFR35.75, or from voluntary participation in medical research programs.

15. Rated Thermal Power (RTP) – Prior to implementation of Extended Power Uprate (EPU), a unit's RTP shall be a total reactor core heat transfer rate to the reactor coolant of 2527 thermal megawatts. After implementation of EPU, a unit's RTP shall be a total reactor core heat transfer rate to the reactor coolant of 2957 thermal megawatts.

16. Reactor Power Operation - Reactor power operation is any operation with the mode switch in the "Startup/Hot Standby" or "Run" position with the reactor critical and above 1% rated thermal power.

12.1 DEFINITIONS (Cont'd)

17. Source Check – Source Check is the qualitative assessment of channel response when the channel sensor is exposed to a radioactive source.

18. Definitions Related to Estimating Dose to the Public Using the ODCM Computer Program:

1. Actual - Refers to using known release data to project the dose to the public for the previous month. These data are stored in the database and used to demonstrate compliance with the reporting requirements of Chapter 12.

2. Projected - Refers to using known release data from the previous month or estimated release data to forecast a future dose to the public. These data are NOT incorporated into the database.

TABLE 12.1-1

SURVEILLANCE FREQUENCY NOTATION

NOTATION	FREQUENCY
S (Shiftly)	At least once per 12 hours
D (Daily)	At least once per 24 hours
T	At least once per 72 hours
W (Weekly)	At least once per 7 days
M (Monthly)	At least once per 31 days
Q (Quarterly)	At least once per 92 days
SA (Semiannually)	At least once per 184 days
A (Annually)	At least once per 366 days
E (Sesquiannually)	At least once per 18 months (550 days)
B (Biennially)	At least once per 24 months (731 days)
S/U (Startup)	Prior to each reactor startup
NA (Not Applicable)	Not applicable

TABLE 12.1-2

MODES

MODE	TITLE	MODE SWITCH POSITION	AVERAGE REACTOR COOLANT TEMPERATURE °F
1	POWER OPERATION	Run	NA
2	STARTUP	Refuel[a] or Startup/Hot Standby	NA
3	HOT SHUTDOWN[a]	Shutdown	>212
4	COLD SHUTDOWN[a]	Shutdown[b]	≤212
5	REFUELING[b]	Shutdown or Refuel	NA

TABLE NOTATIONS

[a] All reactor vessel head closure bolts fully tensioned.

[b] One or more vessel head closure bolts less than fully tensioned.

12.2 INSTRUMENTATION

A. Radioactive Liquid Effluent Monitoring Instrumentation

1. Radioactive Liquid Effluent Monitoring Instrumentation Operability

1. The effluent monitoring instrumentation shown in Table 12.2-1 shall be operable with alarm trip setpoints set to ensure that the limits of Section 12.3.A are not exceeded. The alarm setpoints shall be determined in accordance with the ODCM.

2. With a radioactive liquid effluent monitoring instrument alarm/trip setpoint less conservative than required, immediately suspend the release of radioactive liquid effluents monitored by the affected instrument, or declare the instrument inoperable, or change the setpoint so it is acceptably conservative.

3. With one or more radioactive liquid effluent monitoring instruments inoperable, take the action shown in Table 12.2-1. Restore the instrument to operable status within 30 days and, if unsuccessful, explain why the inoperability was not corrected in a timely manner in the next Radioactive Effluent Release Report.

4. In the event operability requirements and associated action requirements cannot be satisfied, no changes are required in the operational condition of the plant, and this does not prevent the plant from entry into any operational mode.

2. Radioactive Liquid Effluent Monitoring Instrumentation Surveillance

1. Each radioactive liquid effluent monitoring instrument shown in Table 12.2-2 shall be demonstrated operable by performance of the given Source Check, Channel Check, Channel Calibration, and Channel Functional Test operations at the frequencies shown in Table 12.2-2.

B. Radioactive Gaseous Effluent Monitoring Instrumentation

1. Radioactive Gaseous Effluent Monitoring Instrumentation Operability

1. The effluent monitoring instrumentation shown in Table 12.2-3 shall be operable with alarm/trip setpoints set to ensure that the limits of Section 12.4.A are not exceeded. The alarm/trip setpoints shall be determined in accordance with the ODCM.

2. With a radioactive gaseous effluent monitoring instruments alarm/trip setpoint less conservative than required, immediately suspend the release of radioactive gaseous effluents monitored by the affected instrument, or declare the instrument inoperable, or change the setpoint so it is acceptably conservative.

12.2.B.1 Radioactive Gaseous Effluent Monitoring Instrumentation Operability (Cont'd)

3. With one or more radioactive gaseous effluent monitoring instruments inoperable, take the action shown in Table 12.2-3. Restore the instrument to operable status within 30 days and, if unsuccessful, explain why the inoperability was not corrected in a timely manner in the next Radioactive Effluent Release Report.

4. The Unit 2/3 plant chimney gas sampling system may be out of service for 48 hours for the purpose of servicing the high range noble gas monitor as long as the following conditions are satisfied:

   1. Both units are at steady state conditions with the recombiners and charcoal absorbers in service for the operating unit(s).

   2. The dose rate in unrestricted areas must be shown by calculation to be less than the limits of 12.4.A assuming the charcoal absorbers are bypassed on both units.

   3. Both offgas monitors on Unit 2 and Unit 3 must be operational and the monitor reading correlated to the chimney release rate based on the conservative assumption of both units' charcoal absorbers being bypassed.

   4. If the provisions of 12.4.A.1.1, 12.4.A.1.2, or 12.4.A.1.3 cannot be met, an orderly load reduction of the unit(s) shall be initiated immediately.

5. In the event operability requirements and associated action requirements cannot be satisfied, no changes are required in the operational condition of the plant, and this does not prevent the plant from entry into any operation mode.

2. Radioactive Gaseous Effluent Monitoring Instrumentation Surveillance

Each radioactive gaseous radiation monitoring instrument in Table 12.2-4 shall be demonstrated operable by performance of the given Source Check, Channel Check, Channel Calibration, and Channel Functional Test operations at the frequency shown in Table 12.2-4.

TABLE 12.2-1

RADIOACTIVE LIQUID EFFLUENT MONITORING INSTRUMENTATION

UNITS 2 & 3

	Instrument	Minimum Channels Operable	Total No. of Channels	Action
1.	Service Water Effluent Gross Activity Monitor	1	1	10
2.	Liquid Radwaste Effluent Gross Activity Monitor[1]	1	1	11

ACTIONS

ACTION 10 - With less than the minimum number of operable channels, releases via this pathway may continue, provided that at least once per 12 hours grab samples are collected and analyzed for beta or gamma activity at an LLD of less than or equal to $5x10^{-7}$ uCi/ml.

(The grab sample should normally be taken at the Service Water Monitor or at a location which would be representative of the Service Water which is monitored.)

ACTION 11 - With less than a minimum number of operable channels, effluent releases via this pathway may continue, provided that prior to initiating a release, at least 2 independent samples are analyzed, and at least 2 members of the facility staff independently verify the release calculation and discharge valving. Otherwise, suspend release of radioactive effluent via this pathway.

(1) Effluent release via this pathway may continue when either:

1. The flow through the monitor cannot be established and maintained within design parameters, or
2. Effluent activity is below the range of detection for the monitor.

Provided that prior to initiating a release, at least 2 independent samples are analyzed, and at least 2 members of the facility staff independently verify the release calculations and discharge valving.

Otherwise suspend release of radioactive effluent via this pathway.

TABLE 12.2-2

RADIOACTIVE LIQUID EFFLUENT MONITORING
INSTRUMENTATION SURVEILLANCE REQUIREMENTS

UNITS 2 & 3

	Instrument	Channel Functional Test[a][f]	Channel Calibration[b][f]	Channel Check[f]	Source Check
1.	Service Water Effluent Gross Activity Monitor	Q[e]	B[c]	D	B
2.	Liquid Radwaste Effluent Gross Activity Monitor	Q[e]	B[c]	D	B[d]

TABLE 12.2-2 (Cont'd)

RADIOACTIVE LIQUID EFFLUENT MONITORING
INSTRUMENTATION SURVEILLANCE REQUIREMENTS

TABLE NOTATIONS

(a) The Channel Functional Test shall also demonstrate that control room alarm annunciation occurs, if any of the following conditions exist, where applicable.

1. Instrument indicated levels above the alarm setpoint.
2. Circuit failure.
3. Instrument indicates a downscale failure.
4. Instrument controls not set in OPERATE mode.

(b) Channel Calibration shall include performance of a Channel Functional Test.

(c) Channel Calibration shall include performance of a Source Check.

(d) Source Check shall consist of observing instrument response during a discharge.

(e) Channel Functional Tests may be performed by using trip check and test circuitry associated with the monitor chassis.

(f) Channel Functional Tests, Channel Calibrations, and Channel Checks are not required when these instruments are not required to be operable or are tripped.

TABLE 12.2-3

RADIOACTIVE GASEOUS EFFLUENT MONITORING INSTRUMENTATION

UNIT 1

	Instrument	Minimum Channels Operable	Total No. of Channels	Applicable Operational Modes	Action
1.	Main Chimney SPING Noble Gas Monitor	1	3	*	27
2.	Main Chimney Particulate Sampler	1	1	*	22
3.	Main Chimney Iodine Sampler	1	1	*	22

* At all times.

TABLE 12.2-3

RADIOACTIVE GASEOUS EFFLUENT MONITORING INSTRUMENTATION

UNITS 2 & 3

	Instrument	Minimum Channels Operable	Total No. of Channels	Applicable Operational Modes	Action
1.	Main Chimney Noble Gas/SPING/ GE Low Range Activity Monitor	1	3	*	20
2.	Main Chimney SPING Noble Gas Monitors Mid, Hi Range (Accident Range Monitor)	1	1	*	26
3.	Main Chimney Iodine Sampler	1	1	*	22
4.	Main Chimney Particulate Sampler	1	1	*	22
5.	Main Chimney Flow Rate Monitor	1	1	*	21
6.	Main Chimney Sampler Flow Rate Monitor	1	1	*	21
7.	Reactor Building Vent Exhaust Duct Radiation Monitor	See Technical Specification 3.3.6.2			
8.	Reactor Building Vent SPING Noble Gas Monitor Low, Mid, High Range	1	1	*	25
9.	Reactor Building Vent Flow Rate Monitor	1	1	*	21
10.	Reactor Building Vent Sampler Flow Rate Monitor	1	1	*	21
11.	Reactor Building Vent Iodine Sampler	1	1	*	22
12.	Reactor Building Vent Particulate Sampler	1	1	*	22
13.	Offgas Radiation Activity Monitor	1	2	**	28

* At all times.
** During Steam Jet Air Ejector operation.

TABLE 12.2-3 (Cont'd)
RADIOACTIVE GASEOUS EFFLUENT MONITORING INSTRUMENTATION
ACTIONS AND TABLE NOTATIONS

ACTION 20 - With less than the minimum channels operable, effluent releases via this pathway may continue provided grab samples are taken at least once every 8 hours and analyzed for noble gas within 24 hours.

ACTION 21 - With the number of operable channels less than the minimum required, effluent releases via this pathway may continue provided that the flow rate is estimated at least once per 4 hours.

ACTION 22 - With less than the minimum channels operable, effluent releases via this pathway may continue provided samples are continuously collected with auxiliary sampling equipment, as required in Table 12.4-1.

ACTION 25 - With less than the minimum channels operable, effluent releases via this pathway may continue provided that the minimum number of operable channels for the Reactor Building Vent Exhaust Duct Radiation Monitor are operable.

ACTION 26- With less than the minimum channels operable, initiate a alternate method of monitoring the appropriate parameter(s) within 72 hours, and

(a) Restore the inoperable equipment to operable status within 21 days, or

(b) prepare and submit a report to the Commission within the next 30 days outlining the plans, actions taken and procedures to be used to provide for the loss of sampling capability of the system.

ACTION 27 - With less than the minimum channels operable, effluent releases via this pathway may continue provided noble gas samples are taken and analyzed once per day .

ACTION 28 - With less than the minimum channels operable, gases from the main condenser off gas system may be released to the environment for up to 72 hours provided the off gas system is not bypassed and at least one chimney monitor is operable; otherwise, be in MODE 2 in 12 hours.

TABLE 12.2-4

RADIOACTIVE GASEOUS EFFLUENT MONITORING
INSTRUMENTATION SURVEILLANCE REQUIREMENTS

UNIT 1

	Instrument	Channel Functional Test[(a)(e)]	Channel Calibration[(b)]	Channel Check	Source Check	Applicable Operational Modes
1.	Main Chimney SPING Noble Gas Monitor Low Range	Q	E	D	M	*

*At all times.

TABLE 12.2-4

RADIOACTIVE GASEOUS EFFLUENT MONITORING
INSTRUMENTATION SURVEILLANCE REQUIREMENTS

UNITS 2 & 3

Instrument		Channel Functional Test[a][e]	Channel Calibration[b][e]	Channel Check [e]	Source Check	Applicable Operational Modes
1.	Main Chimney Noble Gas Activity Monitor	Q	E	D	M	*
2.	Main Chimney SPING Noble Gas Monitor Lo, Mid, High Range	Q	E	D	M	*
3.	Main Chimney Particulate and Iodine Sampler	NA	NA	D[c]	NA	*
4.	Main Chimney Flow Rate Monitor	Q	B	D	NA	*
5.	Main Chimney Sampler Flow Rate Monitor	Q[d]	B	D	NA	*
6.	Reactor Bldg Vent Exhaust Duct Radiation Monitor	See Technical Specification 3.3.6.2				
7.	Reactor Bldg Vent SPING Noble Gas Monitor Lo, Mid, High Range	Q	E	D	M	*
8.	Reactor Bldg Vent Flow Rate Monitor	Q	B	D	NA	*
9.	Reactor Bldg Sampler Flow Rate Monitor	Q[d]	B	D	NA	*
10.	Reactor Bldg Vent Particulate and Iodine Sampler	NA	NA	D[c]	NA	*
11.	Off Gas Radiation Activity Monitor	Q	B	D	B	**

* At all times.
** During Steam Jet Air Ejector operation.

TABLE 12.2-4 (Cont'd)

RADIOACTIVE GASEOUS EFFLUENT MONITORING
INSTRUMENTATION SURVEILLANCE REQUIREMENTS

TABLE NOTATIONS

(a) The Channel Functional Test shall also demonstrate that control room alarm annunciation occurs, if any of the following conditions exist, where applicable.

1. Instrument indicates levels above the alarm setpoint.
2. Circuit failure.
3. Instrument indicates a downscale failure.
4. Instrument controls not set in OPERATE mode.

(b) Channel Calibration shall include performance of a Channel Functional Test.

(c) Channel Check to verify operability of sampler; that the sampler is in place and functioning properly.

(d) Channel Functional Test shall be performed on local switches providing low flow alarm.

(e) Channel Functional Tests, Channel Calibrations, and Channel Checks are not required when these instruments are not required to be operable or are tripped.

12.2.C Liquid And Gaseous Effluents Instrumentation Bases

1. The radioactive liquid and gaseous effluent instrumentation is provided to monitor the release of radioactive materials in liquid and gaseous effluents during releases. The alarm setpoints for the instruments are provided to ensure that the alarms will occur prior to exceeding the limits of RETS.

12.3 LIQUID EFFLUENTS

12.3.A Liquid Effluents Limits and Reporting Operability

1. Concentration in Unrestricted Areas

The maximum instantaneous concentration of radioactive material released from the site to unrestricted areas (at or beyond the site boundary, Dresden Station ODCM Annex, Appendix F, Figure F-1) shall be limited to ten (10) times the concentrations specified in Appendix B, Table 2, Column 2 to 10CFR20.1001-20.2402, for radionuclides other than dissolved or entrained noble gases. For dissolved or entrained noble gases, the concentration shall be limited to the values listed in Table 12.3-1.

REVISION 3
MARCH 2003

With the concentration of radioactive material released from the site to unrestricted areas exceeding the above limits, without delay decrease the release rate of radioactive materials and/or increase the dilution flow rate to restore the concentration to within the above limits.

2. Dose from Liquid Effluents

The dose or dose commitment above background to a member of the public from radioactive materials in liquid effluents released to unrestricted areas (at or beyond the site boundary) from the site shall be limited to the following:

1. During any Calendar Quarter:

   (1) Less than or equal to 3 mrem to the whole body.
   (2) Less than or equal to 10 mrem to any organ.

2. During any Calendar Year:

   (1) Less than or equal to 6 mrem to the whole body.
   (2) Less than or equal to 20 mrem to any organ.

3. With the calculated dose from the release of radioactive materials in liquid effluents exceeding any of the above limits, prepare and submit a report to the Regional Administrator of the NRC Regional Office within 30 days that identifies the cause(s) and defines the corrective actions taken and the proposed actions to be taken to ensure that future releases are in compliance with Sections 12.3.A.2.1 and 12.3.A.2.2.

12.3.A Liquid Effluents Limits and Reporting Operability (Cont'd)

4. With the calculated dose from the release of radioactive materials in liquid effluents exceeding the limits of Sections 12.3.A.2.1 or 12.3.A.2.2., prepare and submit a report to the Regional Administrator of the NRC Regional Office within 30 days and limit the subsequent releases such that the dose or dose commitment to a member of the public from all uranium fuel cycle sources is limited to less than or equal to 25 mrem to the total body or any organ (except thyroid, which is limited to less than or equal to 75 mrem) over 12 consecutive months. This report shall include an analysis which demonstrates that radiation exposures to all real individuals from all uranium fuel cycle sources (including all effluent pathways and direct radiation) are less than the 40 CFR Part 190 Standard. Otherwise obtain a variance from the Commission to permit releases which exceed the 40 CFR Part 190 Standard. The radiation exposure analysis contained in the report shall use methods prescribed in the ODCM.

5. When the projected annual whole body or any internal organ dose computed at the nearest downstream community water system is equal to or exceeds 2 mrem from all radioactive materials released in liquid effluents from the Station, prepare and submit a report within 30 days to the operator of the community water system. The report is prepared to assist the operator in meeting the requirements of 40 CFR Part 141, EPA Primary Drinking Water Standards. A copy of this report will be sent to the NRC.

3. Dose Projections

At all times during processing prior to discharge to the environs, process and control equipment provided to reduce the amount or concentration of radioactive materials shall be operated when the projected dose due to liquid effluent releases to unrestricted areas (Dresden Station ODCM Annex, Appendix F, Figure F-1), when averaged over 31 days, exceeds 0.12 mrem to the total body or 0.40 mrem to any organ[a].

[a]These values represent 2% of the annual dose limits of Appendix I to 10CFR50.

12.3.A Liquid Effluents Limits and Reporting Operability (Cont'd)

4. Liquid Radioactive Waste Treatment System

If liquid waste has to be or is being discharged without treatment as required above, prepare and submit to the Commission with 30 days, a report which includes the following information.

1. Identification of the defective equipment.

2. Cause of the defect in the equipment.

3. Action(s) taken to restore the equipment to an operating status.

4. Length of time the above requirements were not satisfied.

5. Volume and curie content of the waste discharged which was not processed by the appropriate equipment but which required processing.

6. Action(s) taken to prevent a recurrence of equipment failures.

5. System Operability and Plant Operations

In the event a limit and/or associated action requirements identified in Sections 12.3.A and 12.3.B cannot be satisfied because of circumstances in excess of those addressed in this Section, no changes are required in the operational condition of the plant, and this does not prevent the plant from entry into any operational mode.

12.3.B Liquid Effluents Surveillance

1. Concentration in Unrestricted Areas

The concentration of radioactive material in unrestricted areas shall be determined to be within the prescribed limits by obtaining representative samples in accordance with the sampling and analysis program specified in Table 12.3-2. The sample analysis results will be used with the calculational methods in the ODCM to determine that the concentrations are within the limits of Section 12.3.A.1.

12.3.B Liquid Effluents Surveillance (Cont'd)

2. Dose from Liquid Effluents

The dose contribution from measured quantities of radioactive material shall be determined by calculation at least once per 31 days and cumulative summation of these total body and organ dosed shall be maintained for each calendar quarter.

Doses computed at the nearest community water system will consider only the drinking water pathway and shall be projected using the methods prescribed in ODCM, at least once per 92 days.

3. Dose Projections

Doses due to liquid releases to unrestricted areas (at or beyond the site boundary) shall be projected at least once per 31 days in accordance with the ODCM.

TABLE 12.3-1

ALLOWABLE CONCENTRATION OF DISSOLVED
OR ENTRAINED NOBLE GASES RELEASED FROM
THE SITE TO UNRESTRICTED AREAS
IN LIQUID WASTE

NUCLIDE	AC(μCi/ml)*
Kr-85m	2×10^{-4}
Kr-85	5×10^{-4}
Kr-87	4×10^{-5}
Kr-88	9×10^{-5}
Ar-41	7×10^{-5}
Xe-131m	7×10^{-4}
Xe-133m	5×10^{-4}
Xe-133	6×10^{-4}
Xe-135m	2×10^{-4}
Xe-135	2×10^{-4}

* Computed from Equation 20 of ICRP Publication 2 (1959), adjusted for infinite cloud submersion in water, and R = 0.01 rem/week, density = 1.0 g/cc and Pw/Pt = 1.0.

TABLE 12.3-2

RADIOACTIVE LIQUID WASTE SAMPLING AND ANALYSIS PROGRAM

UNIT 1

LIQUID RELEASE TYPE	SAMPLING FREQUENCY[6]	MINIMUM ANALYSIS FREQUENCY[6]	TYPE OF ACTIVITY ANALYSIS	LOWER LIMIT OF DETECTION (LLD)[1] (µCi/ml)
Above Ground Liquid Storage Tanks	See Technical Requirements Manual	See Technical Requirements Manual	Principal Gamma Emitters[5]	$5x10^{-7}$
			Dissolved & Entrained Gases[6] (Gamma Emitters)	$1x10^{-5}$

REVISION 3
MARCH 2003

TABLE 12.3-2
RADIOACTIVE LIQUID WASTE SAMPLING AND ANALYSIS PROGRAM
UNITS 2 & 3

LIQUID RELEASE TYPE	SAMPLING FREQUENCY[6]	MINIMUM ANALYSIS FREQUENCY[6]	TYPE OF ACTIVITY ANALYSIS	LOWER LIMIT OF DETECTION (LLD)[1] (μCi/ml)
A. Batch Release Tanks	Prior to Each Batch	Prior to Each Batch	Principal Gamma Emitters[5]	$5x10^{-7}$
			I-131	$1x10^{-6}$
			H-3	$1x10^{-5}$
	Prior to Each Batch	M Composite[2]	Gross Alpha	$1x10^{-7}$
	Prior to Each Batch	Q Composite [2]	Fe-55	$1x10^{-6}$
			Sr-89, Sr-90	$5x10^{-8}$
	Prior to One Batch/M	M	Dissolved & Entrained Gases [6] (Gamma Emitters)	$1x10^{-5}$
B. Plant Continuous Releases[4]	M[3] (Grab Sample)	M[3]	I-131	$1x10^{-6}$
	M[3] (Grab Sample)	M[3]	Principal Gamma Emitters[5]	$5x10^{-7}$
	M[3] (Grab Sample)	M[3]	Dissolved & Entrained Gases[6] (Gamma Emitters)	$1x10^{-5}$
	M[3] (Grab Sample)	M[3]	H-3	$1x10^{-5}$
			Gross Alpha	$1x10^{-7}$
	Q[3] (Grab Sample)	Q[3]	Sr-89, Sr-90	$5x10^{-8}$
			Fe-55	$1x10^{-6}$
C. Above Ground Liquid Storage Tanks	See Technical Requirements Manual	See Technical Requirements Manual	Principal Gamma Emitters[5]	$5x10^{-7}$
			Dissolved & Entrained Gases[6] (Gamma Emitters)	$1x10^{-5}$

Rev. 4 Oct. 2002

TABLE 12.3-2 (Cont'd)
RADIOACTIVE LIQUID WASTE SAMPLING AND ANALYSIS PROGRAM
TABLE NOTATION

(1) The LLD is defined, for purposes of these specifications, as the smallest concentration of radioactive material in a sample that will yield a net count, above system background, that will be detected with 95% probability with only 5% probability of falsely concluding that a blank observation represents a "real" signal.

For a particular measurement system, which may include radiochemical separation:

$$LLD = \frac{4.66 S_b}{E \cdot V \cdot 2.22 \times 10^6 \cdot Y \cdot \exp(-\lambda \Delta t)}$$

Where:

LLD = the lower limit of detection (microCuries per unit mass or volume),

s_b = the standard deviation of the background counting rate or of the counting rate of a blank sample as appropriate (counts per minute),

E = the counting efficiency (counts per disintegration),

V = the sample size (units of mass or volume),

2.22×10^6 = the number of disintegrations per minute per microCurie,

Y = the fractional radiochemical yield, when applicable,

λ= the radioactive decay constant for the particular radionuclide (sec^{-1}), and

Δt = the elapsed time between the midpoint of sample collection and the time of counting (sec).

Typical values of E, V, Y, and Δt should be used in the calculation.

Alternate LLD Methodology

An alternate methodology for LLD determination follows and is similar to the above LLD equation:

$$LLD = \frac{(2.71 + 4.65\sqrt{B}) \cdot \text{Decay}}{E \; q \; b \; Y \; t \; (2.22E06)}$$

TABLE 12.3-2 (Continued)
RADIOACTIVE LIQUID WASTE SAMPLING AND ANALYSIS PROGRAM
TABLE NOTATION

Where:

B = background sum (counts)

E = counting efficiency, (counts detected/disintegrations)

q = sample quantity, (mass or volume)

b = abundance, (if applicable)

Y = fractional radiochemical yield or collection efficiency, (if applicable)

t = count time (minutes)

2.22E06 = number of disintegrations per minute per microCurie

$(2.71 + 4.65\sqrt{B}) = k^2 + (2k \sqrt{2} \sqrt{B})$, and k = 1.645.

(k=value of the t statistic from the single-tailed t distribution at a significance level of 0.95% and infinite degrees of freedom. This means that the LLD result represents a 95% detection probability with a 5% probability of falsely concluding that the nuclide present when it is not or that the nuclide is not present when it is.)

Decay = $e^{\lambda\Delta t} [\lambda RT/(1-e^{-\lambda RT})] [\lambda T_d/(1-e^{-\lambda Td})]$, (if applicable)

λ = radioactive decay constant, (units consistent with Δt, RT and T_d)

Δt = "delta t", or the elapsed time between sample collection or the midpoint of sample collection and the time the count is started, depending on the type of sample, (units consistent with λ)

RT = elapsed real time, or the duration of the sample count, (units consistent with λ)

T_d = sample deposition time, or the duration of analyte collection onto the sample media, (unit consistent with λ)

The LLD may be determined using installed radioanalytical software, if available. In addition to determining the correct number of channels over which to total the background sum, utilizing the software's ability to perform decay corrections (i.e. during sample collection, from sample collection to start of analysis and during counting), this alternate method will result in a more accurate determination of the LLD.

It should be recognized that the LLD is defined as a before the fact limit and not as an after the fact limit for a particular measurement.

TABLE 12.3-2 (Cont'd)
RADIOACTIVE LIQUID WASTE SAMPLING AND ANALYSIS PROGRAM
TABLE NOTATION

(2) A composite sample is one in which the quantity of liquid samples is proportional to the quantity of liquid waste discharged and in which the method of sampling employed results in a specimen which is representative of the liquids released.

(3) If the alarm setpoint of the service water effluent monitor as determined in the ODCM is exceeded, the frequency of analysis shall be increased to daily until the condition no longer exists.

(4) A batch release is the discharge of liquid wastes of a discrete volume. Prior to sampling for analyses, each batch shall be isolated and then thoroughly mixed to assure representative sampling. A continuous release is the discharge of liquid wastes of a nondiscrete volume; e.g., from a volume or system that has an input flow during the release.

(5) The principal gamma emitters for which the LLD specification applies exclusively are the following radionuclides: Mn-54, Fe-59, Co-60, Zn-65, Co-58, Mo-99, Cs-134, Cs-137, Ce-141. Ce-144 shall also be measured, but with an LLD of 5E-06. Other peaks which are measurable and identifiable by gamma ray spectrometry together with the above nuclides, shall be also identified and reported when the actual analysis is performed on a sample. Nuclides which are below the LLD for the analyses shall not be reported as being present at the LLD level for that nuclide.

(6) The dissolved and entrained gases (gamma emitters) for which the LLD specification applies exclusively are the following radionuclides: Kr-87, Kr-88, Xe-133, Xe-133m, Xe-135, and Xe-138. Other dissolved and entrained gases (gamma emitters) which are measurable and identifiable by gamma ray spectrometry, together with the above nuclides, shall also be identified and reported when an actual analysis is performed on a sample. Nuclides which are below the LLD for the analyses shall not be reported as being present at the LLD level for that nuclide.

12.3.C LIQUID EFFLUENTS BASES

1. Concentration

This specification is provided to ensure that the concentration of radioactive materials released in liquid waste effluents from the site to unrestricted areas will be less than the concentration levels specified in Appendix B, Table 2, Column 2 to 10CFR20.1001-20.2402.

2. Dose

This specification is provided to implement the requirements of Sections II.A, III.A and IV.A of Appendix I, 10 CFR Part 50. The operational requirements implements the guides set forth in Section II.A of Appendix I. The statements provide the required operating flexibility and at the same time implement the guides set forth in Section IV.A of Appendix I to assure that the releases of radioactive material in liquid effluents will be kept "as low as reasonably achievable". The dose calculations in the ODCM implement the requirements in Section III.A of Appendix I that conformance with the guides of Appendix I be shown by calculational procedures based on models and data such that the actual exposure of an individual through appropriate pathways is unlikely to be substantially underestimated. The equations specified in the ODCM for calculating the doses due to the actual release rates of radioactive materials in liquid effluents will be consistent with the methodology provided in Regulatory Guide 1.109, "Calculation of Annual Doses to Man from Routine Releases of Reactor Effluents for the Purpose of Evaluating Compliance with 10 CFR Part 50, Appendix I", Revision 1, October 1977 and Regulatory Guide 1.113, "Estimating Aquatic Dispersion of Effluents from Accidental and Routine Reactor Releases for the Purpose of Implementing Appendix I", April 1977. NUREG-0113 provides methods for dose calculations consistent with Reg Guide 1.109 and 1.113.

3. Liquid Waste Treatment

The operability of the liquid radwaste treatment system ensures that this system will be available for use whenever liquid effluents require treatment prior to release to the environment. The requirement that the appropriate portions of this system be used when specified provides assurance that the releases of radioactive materials in liquid effluents will be kept "as low as reasonably achievable". This specification implements the requirements of 10 CFR Part 50.36a, General Design Criterion 60 of Appendix A to 10 CFR Part 50 and design objective Section 11.D of Appendix I to 10 CFR Part 50.

12.3.C LIQUID EFFLUENTS BASES - (Continued)

4. Mechanical Vacuum Pump

The purpose of isolating the mechanical vacuum line is to limit release of activity from the main condenser. During an accident, fission products would be transported from the reactor through the main steam line to the main condenser. The fission product radioactivity would be sensed by the main steamline radioactivity monitors which initiate isolation.

12.4 GASEOUS EFFLUENTS

A. Gaseous Effluents Limits and Reporting Operability

1. Dose Rate

The dose rate in unrestricted areas at or beyond the site boundary (Dresden Station ODCM Annex, Appendix F, Figure F-1) due to radioactive materials released in gaseous effluents from the site shall be limited to the following.

1. For Noble Gases:

   (1) Less than a dose rate of 500 mrem/year to the whole body.
   (2) Less than a dose rate of 3000 mrem/year to the skin.

2. For iodine-131, for iodine-133, tritium and for all radionuclides in particulate form with half-lives greater than 8 days, less than a dose rate of 1500 mrem/year.

3. If the dose rates exceed the above limits, without delay decrease the release rates to bring the dose rates within the limits, and provide notification to the Commission (per 10 CFR Part 20.2203).

2. Noble Gas Dose

The air dose in unrestricted areas at or beyond the site boundary due to noble gases released in gaseous effluents from the unit shall be limited to the following:

1. For Gamma Radiation

   (1) Less than or equal to 5 mrad during any calendar quarter.
   (2) Less than or equal to 10 mrad during any calendar year.

2. For Beta Radiation

   (1) Less than or equal to 10 mrad during any calendar quarter.
   (2) Less than or equal to 20 mrad during any calendar year.

3. With the calculated air dose from radioactive noble gases in gaseous effluents exceeding any of the above limits, prepare and submit a report to the Regional Administrator of the NRC Regional Office within 30 days, that identifies the cause(s) for exceeding the limit(s) and defines the corrective actions to be taken to ensure that future releases are in compliance with Sections 12.4.A.2.1 and 12.4.A.2.2.

12.4.A Gaseous Effluents Limits and Reporting Operability (Cont'd)

4. With the calculated air dose from radioactive noble gases in gaseous effluents exceeding the limits of Sections 12.4.A.2.1 or 12.4.A.2.2, prepare and submit a report to the Regional Administrator of the NRC Regional Office within 30 days and limit the subsequent releases such that the doses or dose commitment to a member of the public from all uranium fuel cycle sources is limited to less than or equal to 25 mrem to the total body or any organ (except thyroid, which is limited to less than or equal to 75 mrem) over 12 consecutive months. This report shall include an analysis which demonstrates that radiation exposures to all members of the public from all uranium fuel cycle sources (including all effluent pathways and direct radiation) are less than 40 CFR Part 190 Standard. Otherwise, obtain a variance from the Commission to permit releases which exceed the 40CFR Part 190 Standard. The radiation exposure analysis contained in the report shall use the methods prescribed in the ODCM.

5. Process and control equipment provided to reduce the amount or concentration of radioactive materials shall be operated when the projected dose due to gaseous effluents released to the unrestricted areas, when averaged over 31 days, exceeds 2% of the annual dose limits of Appendix I to 10CFR50.

3. Iodine-131, Iodine-133, Tritium, and Particulate Dose

The dose to a member of the public in unrestricted areas at or beyond the site boundary from iodine-131, iodine-133, tritium, and all radionuclides in particulate form with half-lives greater than 8 days in gaseous effluents released from the unit shall be limited to the following.

1. Less than or equal to 7.5 mrem to any organ during any calendar quarter.

2. Less than or equal to 15 mrem to any organ during any calendar year.

3. With the calculated dose from the release of iodine-131, iodine-133, tritium, and all radionuclides in particulate form with half-lives greater than 8 days in gaseous effluents exceeding any of the above limits, prepare and submit a report to the Regional Administrator of the NRC Regional Office within 30 days, that identifies the cause(s) for exceeding the limit and defines the corrective actions taken to ensure that future releases are in compliance with Section 12.4.A.3.1 and 12.4.A.3.2.

4. With the calculated dose from the release of iodine-131, iodine-133, tritium, and all radionuclides in particulate form with half-lives greater than 8 days in gaseous effluents exceeding the limits of Sections 12.4.A.3.1. or 12.4.A.3.2., prepare and submit a report to the Regional Administrator of the NRC Regional Office within 30 days and limit subsequent releases such that the dose or dose commitment to a member of the public from all uranium fuel is limited to less than or equal to 25 mrem to the total body or organ (except the thyroid, which is limited to less than or equal to 75 mrem) over 12 consecutive months. This report shall include an analysis which demonstrates that radiation exposures to all members of the public from all uranium fuel cycle sources (including all effluent pathways and direct radiation) are less than the 40 CFR Part 190 Standard. Otherwise, obtain a variance from the Commission to permit releases which exceed the 40 CFR Part 190 Standard. The radiation exposure analysis contained in the report shall use the methods prescribed in the ODCM.

12.4.A Gaseous Effluents Limits and Reporting Operability (Cont'd)

5. Process and control equipment provided to reduce the amount or concentration of radioactive materials shall be operated when the projected dose due to gaseous effluents released to the unrestricted areas, when averaged over 31 days, exceeds 2% of the annual dose limits of Appendix I to 10CFR50.

4. Off-Gas Treatment

1. At all times during processing for discharge to the environs, process and control equipment provided to reduce the amount of concentration of radioactive materials shall be operated.

2. The above specification shall not apply for the Off-Gas Charcoal Adsorber Beds below 30% RTP.

3. The recombiner shall be operable whenever the reactor is operating at a pressure greater than 900 psig.

4. The recombiner may be inoperable for 48 hours.

5. With either the recombiners inoperable, or all charcoal beds by-passed for more than 7 days in a calendar quarter while operating above 30% RTP, prepare and submit a report to the Regional Administrator of the NRC Regional Office within 30 days that includes the following information.

a. Identification of the defective equipment.

b. Cause of the defect in the equipment.

c. Action(s) taken to restore the equipment to an operating status.

d. Length of time the above requirements were not satisfied.

e. Volume and curie content of the waste discharged which was not processed by the inoperable equipment but which required processing.

f. Action(s) taken to prevent a recurrence of equipment failures.

12.4.A Gaseous Effluents Limits and Reporting Operability (Cont'd)

5. Main Condenser Air Ejector

The release rate of the sum of the activities from the noble gases measured at the main condenser air ejector shall be limited to ≤ 252,700 microcuries/sec (after 30 minutes decay) when in modes 1,2[a], and 3[a]. With the release rate of the sum of the activities from noble gases at the main condenser air ejector effluent (as measured prior to the offgas holdup line) > 252,700 microcuries/sec (after 30 minutes decay), restore the release rate to within its limits within 72 hours, or either isolate all main steam lines or isolate the SJAE within the next 12 hours, or be in MODE 3 in the next 12 hours and in MODE 4 in the next 24 hours. (Refer to Technical Specification 3.7.6.)

6. System Operability and Plant Operations

In the event a limit and/or associated action requirements identified in Sections 12.4.A and 12.4.B cannot be satisfied because of circumstances in excess of those addressed in this Section, no changes are required in the operational condition of the plant, and this does not prevent the plant from entry into any operational mode.

[a]With any main steam line not isolated and steam jet air ejector (SJAE) in operation.

12.4.B Gaseous Effluents Surveillance

1. Dose Rate

The dose rates due to radioactive materials released in gaseous effluents from the site shall be determined to be within the prescribed limits by obtaining representative samples in accordance with the sampling and analysis program specified in Table 12.4-1. The dose rates are calculated using methods prescribed in the ODCM.

2. Noble Gas Dose

The air dose due to releases of radioactive noble gases in gaseous effluents shall be determined to be within the prescribed limits by obtaining representative samples in accordance with the sampling and analysis program specified in Sections A and B of Table 12.4-1. The allocation of effluents between units having shared effluent control system and the determination of cumulative and projected dose contributions for the current calendar quarter and current calendar year shall be determined in accordance with the methodology and parameters in the ODCM at least once every 31 days.

3. Iodine-131, Iodine-133, Tritium and Particulate Dose

The dose to a member of the public due to releases of iodine-131, iodine-133, tritium, and all radionuclides in particulate form with half-lives greater than 8 days shall be determined to be within the prescribed limits by obtaining representative samples in accordance with the sampling and analysis program specified in Table 12.4-1.

For radionuclides not determined in each batch or weekly composite, the dose contribution to the current calendar quarter cumulative summation may be estimated by assuming an average monthly concentration based on the previous monthly or quarterly composite analyses. However, for reporting purposes, the calculated dose contributions shall be based on the actual composite analyses when possible.

The allocation of effluents between units having shared effluent control system and the determination of cumulative and projected dose contributions for the current calendar quarter and current calendar year shall be determined in accordance with the methodology and parameters in the ODCM at least once every 31 days.

4. Off-Gas Treatment

Doses due to treated gases released to unrestricted areas at or beyond the site boundary shall be projected at least once per 31 days in accordance with the ODCM.

12.4.B Gaseous Effluents Surveillance - Continued

5. Noble Gases at the Main Condenser Air Ejector

The release rate of noble gases from the main condenser air ejector shall be continuously monitored. The release rate of the sum of the activities from noble gases from the main condenser air ejector shall be determined to be within the limits of 12.4.A.5 at the following frequencies by performing an isotopic analysis of a representative sample of gases taken at the recombiner outlet, or at the air ejector outlet if the recombiner is by-passed.

1. At least once per 31 days.

2. Once within 4 hours after a ≥50% increase in the nominal steady state fission gas release after factoring out increases due to changes in thermal power level.

(Refer to Technical Specification 3.7.6.)

TABLE 12.4-1

RADIOACTIVE GASEOUS WASTE SAMPLING
AND ANALYSIS PROGRAM
UNIT 1

GASEOUS RELEASE TYPE	SAMPLING FREQUENCY	MINIMUM ANALYSIS FREQUENCY	TYPE OF ACTIVITY ANALYSIS	LOWER LIMIT OF DETECTION (LLD)[1] (µCi/ml)
A. Main Chimney	M (Grab Sample)	M	Principal Gamma Emitters [5] Tritium Noble Gases	$1x10^{-4}$ $1x10^{-6}$ $1x10^{-6}$
	M[4,6] (Continuous)	M [3] Iodine Sample	I-131 I-133	$1x10^{-12}$ $1x10^{-10}$
	M[6] (Continuous)	M [3] Particulate Sample	Principal Gamma Emitters [5]	$1x10^{-11}$
	Q (Continuous)	Q Composite Particulate Sample	Sr-89, Sr-90 Gross Alpha	$1x10^{-11}$
B. Chem Cleaning Chimney	W[7] (Continuous)	W Iodine Sample	I-131 I-133	$1x10^{-12}$ $1x10^{-10}$
	W[7] (Continuous)	W Particulate Sample	Principle Gamma Emitter [5]	$1x10^{-11}$

Table 12.4-1

RADIOACTIVE GASEOUS WASTE SAMPLING
AND ANALYSIS PROGRAM
UNITS 2 & 3

GASEOUS RELEASE TYPE	SAMPLING FREQUENCY	MINIMUM ANALYSIS FREQUENCY	TYPE OF ACTIVITY ANALYSIS	LOWER LIMIT OF DETECTION (LLD)[1] (μCi/ml)
A. Main Chimney Reactor Bldg. Vent Stack	M (Grab Sample)	M[2] M	Principal Gamma Emitters[5] Tritium	$1x10^{-4}$ $1x10^{-6}$
B. All Release Types as Listed in A above	Continuous[4]	W[3] Iodine Sample	I-131 I-133	$1x10^{-12}$ $1x10^{-10}$
	Continuous[4]	W[3] Particulate Sample	Principal Gamma Emitters [5]	$1x10^{-11}$
	Continuous[4]	Q Composite Particulate Sample	Sr-89 Sr-90	$1x10^{-11}$ $1x10^{-11}$
	Continuous[4]	Q Composite Particulate Sample	Gross Alpha	$1x10^{-11}$
C. Main Chimney	Continuous[4]	Noble Gas Monitor	Noble Gases	$1x10^{-6}$
D. Reactor Bldg. Vent Stack	Continuous[4]	Noble Gas Monitor	Noble Gases	$1x10^{-4}$

TABLE 12.4-1 (Cont'd)

RADIOACTIVE GASEOUS WASTE SAMPLING AND ANALYSIS PROGRAM
TABLE NOTATION

(1) The LLD is defined, for purposes of these specifications, as the smallest concentration of radioactive material in a sample that will yield a net count, above system background, that will be detected with 95% probability with only 5% probability of falsely concluding that a blank observation represents a "real" signal.

For a particular measurement system, which may include radiochemical separation:

$$LLD = \frac{4.66 S_b}{E \cdot V \cdot 2.22 \times 10^6 \cdot Y \cdot \exp(-\lambda \Delta t)}$$

Where:

LLD = the lower limit of detection (microCuries per unit mass or volume),

s_b = the standard deviation of the background counting rate or of the counting rate of a blank sample as appropriate (counts per minute),

E = the counting efficiency (counts per disintegration),

V = the sample size (units of mass or volume),

2.22×10^6 = the number of disintegrations per minute per microCurie,

Y = the fractional radiochemical yield, when applicable,

λ= the radioactive decay constant for the particular radionuclide (sec^{-1}), and

Δt = the elapsed time between the midpoint of sample collection and the time of counting (sec).

Typical values of E, V, Y, and Δt should be used in the calculation.

Alternate LLD Methodology

An alternate methodology for LLD determination follows and is similar to the above LLD equation:

$$LLD = \frac{(2.71 + 4.65\sqrt{B}) \cdot \text{Decay}}{E \; q \; b \; Y \; t \; (2.22E06)}$$

TABLE 12.4-1 (Continued)

RADIOACTIVE GASEOUS WASTE SAMPLING AND ANALYSIS PROGRAM
TABLE NOTATIONS

Where:

B = background sum (counts)

E = counting efficiency, (counts detected/disintegrations)

q = sample quantity, (mass or volume)

b = abundance, (if applicable)

Y = fractional radiochemical yield or collection efficiency, (if applicable)

t = count time (minutes)

2.22E06 = number of disintegrations per minute per microCurie

$(2.71 + 4.65\sqrt{B}) = k^2 + (2k\sqrt{2}\sqrt{B})$, and k = 1.645.

(k=value of the t statistic from the single-tailed t distribution at a significance level of 0.95% and infinite degrees of freedom. This means that the LLD result represents a 95% detection probability with a 5% probability of falsely concluding that the nuclide present when it is not or that the nuclide is not present when it is.)

$\text{Decay} = e^{\lambda\Delta t}\,[\lambda RT/(1-e^{-\lambda RT})]\,[\lambda T_d/(1-e^{-\lambda T_d})]$, (if applicable)

λ = radioactive decay constant, (units consistent with Δt, RT and T_d)

Δt = "delta t", or the elapsed time between sample collection or the midpoint of sample collection and the time the count is started, depending on the type of sample, (units consistent with λ)

RT = elapsed real time, or the duration of the sample count, (units consistent with λ)

T_d = sample deposition time, or the duration of analyte collection onto the sample media, (unit consistent with λ)

The LLD may be determined using installed radioanalytical software, if available. In addition to determining the correct number of channels over which to total the background sum, utilizing the software's ability to perform decay corrections (i.e. during sample collection, from sample collection to start of analysis and during counting), this alternate method will result in a more accurate determination of the LLD.

It should be recognized that the LLD is defined as a before the fact limit and not as an after the fact limit for a particular measurement.

TABLE 12.4-1 (Cont'd)

RADIOACTIVE GASEOUS WASTE SAMPLING AND ANALYSIS PROGRAM
TABLE NOTATION

(2) Sampling and analyses shall also be performed following shutdown, startup, or a thermal power change exceeding 20% RTP 1 hour unless (1) analysis shows that the dose equivalent I-131 concentration in the primary coolant has not increased more than a factor of 5, and (2) the noble gas activity monitor shows that effluent activity has not increased by more than a factor of 3.

(3) Samples shall be changed at least once per 7 days and the analyses completed within 48 hours after removal from the sampler. Sampling shall also be performed within 24 hours following each shutdown, startup, or thermal power level change exceeding 20% RTP in one hour. This requirement does not apply if 1) analysis shows that the dose equivalent I-131 concentration in the primary coolant has not increased more than a factor of 5, and 2) the noble gas activity monitor shows that effluent activity has not increased by more than a factor of 3. When samples collected for 24 hours are analyzed, the corresponding LLDs may be increased by a factor of 10.

(4) The ratio of sample flow rate to the sampled stream flow rate shall be known.

(5) The principal gamma emitters for which the LLD specification applies exclusively are the following radionuclides: Kr-87, Kr-88, Xe-133, Xe-133m, Xe-135, and Xe-138 for gaseous emissions, and Mn-54, Fe-59, Co-60, Zn-65, Co-58, Mo-99, Cs-134, Cs-137, Ce-141, and Ce-144 for particulate emissions. Other peaks which are measurable and identifiable by gamma ray spectrometry, together with the above nuclides, shall be also identified and reported when an actual analysis is performed on a sample. Nuclides which are below the LLD for the analyses shall not be reported as being present at the LLD level for the nuclide.

(6) Analysis frequency shall be increased to 1/week if release rates exceed 1% of any applicable limit referenced in the ODCM, when added to Units 2 and 3 airborne effluents.

(7) Gaseous Discharge from the Chemical Cleaning Building is continuously sampled through a particulate filter and iodine cartridge which are counted weekly. Sampling is not required if the Chemical Cleaning and Interim Radwaste Storage Facility (IRSF) ventilation systems are not running.

12.4.C Gaseous Effluents Bases

1. Gaseous Effluents, Dose

This Section is provided to ensure that the dose at the unrestricted area boundary from gaseous effluents from the units on site will be within the annual dose limits of 10CFR20 for unrestricted areas. These limits provide reasonable assurance that radioactive material discharged in gaseous effluents will not result in the exposure of an individual in an unrestricted area to annual average concentrations exceeding the limits specified in Appendix B, Table 2 of 10CFR20.1001-2402. The release rate limits restrict, at all times, the corresponding gamma and beta dose rates above background to an individual at or beyond the unrestricted area boundary to less than or equal to 500 mrem/year to the total body or to less than or equal to 3000 mrem/year to the skin. These release rate limits also restrict, at all times, the corresponding thyroid dose rate above background via the inhalation pathway to less than or equal to 1500 mrem/year. For purposes of calculation doses resulting from airborne releases, the main chimney is considered to be an elevated release point and the reactor building vent stack is considered to be a mixed mode release point.

2. Dose, Noble Gases

This Section is provided to implement the requirements of Sections II.B, III.A and IV.A of Appendix I, 10 CFR Part 50. The Operability Requirements implement the guides set forth in Section II.3 of Appendix I. The statements provide the required operating flexibility and at the same time implement the guides set forth in Section IV.A of Appendix I to assure that the releases of radioactive material in gaseous effluents will be kept "as low as is reasonably achievable." The surveillance requirements implement the requirements in Section III.A of Appendix I that conformance with the guides of Appendix I is to be shown by calculational procedures based on models and data such that the actual exposure of an individual through the appropriate pathways is unlikely to be substantially underestimated. The dose calculations established in the ODCM for calculating the doses due to the actual release rates of radioactive noble gases in gaseous effluents will be consistent with the methodology provided in Regulatory Guide 1.109, "Calculation of Annual Doses to Man from Routine Releases of Reactor Effluents for the Purpose of Evaluating Compliance with 10 CFR Part 50, Appendix I," Revision 1, October 1977 and Regulatory Guide 1.111, "Methods for Estimating Atmospheric Transport and Dispersion of Gaseous Effluents in Routine Releases from Light-Water Cooled Reactors," Revision 1, July 1977. NUREG-0133 provides methods for dose calculations consistent with Regulatory Guides 1.109 and 1.111.

12.4.C Gaseous Effluents Bases (Cont'd)

3. Dose, Radioiodines, Radioactive Material in Particulate Form and Radionuclides Other than Noble Gases

This Section is provided to implement the requirements of Sections II.C, III.A and IV.A of Appendix I, 10 CFR Part 50. The Operability Requirements are the guides set forth in Section II.C of Appendix I. The statements provide the required operating flexibility and at the same time implement the guides set forth in Section IV.A of Appendix I to assure that the releases of radioactive materials in gaseous effluents will be kept "as low as reasonably achievable." The ODCM calculational methods specified in the surveillance requirements implement the requirements in Section III.A of Appendix I that conformance with the guides of Appendix I be shown by calculational procedures based on models and data such that the actual exposure of an individual through appropriate pathways is unlikely to be substantially underestimated. The ODCM calculational methods approved by NRC for calculating the doses due to the actual release rates of the subject materials are required to be consistent with the methodology provided in Regulatory Guide 1.109. "Calculation of Annual Doses to Man from Routine Releases of Reactor Effluents for the Purpose of Evaluating Compliance with 10 CFR Part 50, Appendix I", Revision 1, October 1977 and Regulatory Guide 1.111, "Methods for Estimating Atmospheric Transport and Dispersion of Gaseous Effluents in Routine Releases from Light-Water-Cooled Reactors," Revision 1, July 1977. These equations also provide for determining the actual doses based upon the historical average atmospheric conditions. The release rate limits for radioiodines, radioactive material in particulate form and radionuclides other than noble gases are dependent on the existing radionuclide pathways to man, in the unrestricted area. The pathways which were examined in the development of these limits were: 1) individual inhalation of airborne radionuclides, 2) deposition of radionuclides onto green leafy vegetation with subsequent consumption by man and 3) deposition onto grassy areas where milk animals graze with consumption of the milk by man.

4. Gaseous Waste Treatment

The operability of the gaseous waste treatment which reduces amounts or concentrations of radioactive materials ensures that the system will be available for use whenever gaseous effluents require treatment prior to release to the environment. The requirement that the appropriate portions of this system be operable when specified provides reasonable assurance that the releases of radioactive materials in gaseous effluents will be kept "as low as reasonably achievable". This specification implements the requirements of 10 CFR Part 50.36a, General Design Criterion 60 of Appendix A to 10 CFR Part 50, and design objective Section II.D of Appendix I to 10 CFR Part 50.

12.5 RADIOLOGICAL ENVIRONMENTAL MONITORING PROGRAM

12.5.1 Monitoring Program

Operability Requirements

12.5.1.A The Radiological Environmental Monitoring Program shall be conducted as specified in Table 12.5-1.

Applicability: At all times.

Action:

1. With the Radiological Environmental Monitoring Program not being conducted as specified in Table 12.5-1, prepare and submit to the Commission, in the Annual Radiological Environmental Operating Report required by Section 12.6.1, a description of the reasons for not conducting the program as required and the plans for preventing a recurrence.

   Deviations are permitted from the required sampling schedule if specimens are unobtainable due to hazardous conditions, seasonal availability, malfunction of sampling equipment, if a person/business who participates in the program goes out of business or no longer can provide sample, or contractor omission which is corrected as soon as discovered. If the equipment malfunctions, corrective actions shall be completed as soon as practical. If a person/business supplying samples goes out of business, a replacement supplier shall be found as soon as possible. All deviations from the sampling schedule will be described in the Annual Radiological Environmental Operating Report.

2. With the level of radioactivity as the result of plant effluents in an environmental sampling medium at a specified location exceeding the reporting levels of Table 12.5-2 when averaged over any calendar quarter, prepare and submit a report to the Regional Administrator of the NRC Regional Office within 30 days, that identifies the cause(s) for exceeding the limit(s) and defines the corrective actions to be taken to reduce radioactive effluents so that the potential annual dose* to a MEMBER OF THE PUBLIC is less than the calendar year limits of Section 12.3.A.2, 12.4.A.2, or 12.4.A.3. When more than one of the radionuclides in Table 12.5-2 are detected in the sampling medium, this report shall be submitted if:

$$\frac{\text{concentration (1)}}{\text{reporting level (1)}} + \frac{\text{concentration (2)}}{\text{reporting level (2)}} + \ldots \geq 1.0$$

   When radionuclides other than those in Table 12.5-2 are detected and are the result of plant effluents, this report shall be submitted if the potential annual dose* to A MEMBER OF THE PUBLIC from all radionuclides is equal to or greater than the calendar year limits of Section 12.3.A.2, 12.4.A.2, or 12.4.A.3. This report is not required if the measured level of radioactivity was not the result of plant effluents; however, in such an event, the condition shall be reported and described in the Annual Radiological Environmental Operating Report required by Section 12.6.1.

*The methodology and parameters used to estimate the potential annual dose to a MEMBER OF THE PUBLIC shall be indicated in this report.

12.5 RADIOLOGICAL ENVIRONMENTAL MONITORING PROGRAM (Continued)

12.5.1.A.3. If the sample type or sampling location(s) as required by Table 12.5-1 become(s) permanently unavailable , identify suitable alternative sampling media for the pathway of interest and/or specific locations for obtaining replacement samples and add them to the Radiological Environmental Monitoring Program as soon as practicable. The specific locations from which samples were unavailable may then be deleted from the monitoring program.

Prepare and submit controlled version of the ODCM within 180 days including a revised figure(s) and table reflecting the new location(s) with supporting information identifying the cause of the unavailability of samples and justifying the selection of new location(s) for obtaining samples.

Surveillance Requirements

12.5.1.B The radiological environmental monitoring program samples shall be collected pursuant to Table 12.5-1 from the specific locations given in the table and figure(s) in the ODCM, and shall be analyzed pursuant to the requirements of Table 12.5-1 and the detection capabilities required by Table 12.5-3.

Bases

12.5.1.C The Radiological Environmental Monitoring Program required by this section provides representative measurements of radiation and of radioactive materials in those exposure pathways and for those radionuclides that lead to the highest potential radiation exposures of MEMBERS OF THE PUBLIC resulting from the station operation. This monitoring program implements Section IV.B.2 of Appendix I to 10 CFR Part 50 and thereby supplements the radiological effluent monitoring program by verifying that the measurable concentrations of radioactive materials and levels of radiation are not higher than expected on the basis of the effluent measurements and the modeling of the environmental exposure pathways. Guidance for this monitoring program is provided by the Radiological Assessment Branch Technical Position on Environmental Monitoring. The initially specified monitoring program will be effective for at least the first 3 years of commercial operation. Following this period, program changes may be initiated based on operational experience.

The required detection capabilities for environmental sample analyses are tabulated in terms of the lower limits of detection (LLDs). The LLDs required by Table 12.5-3 are considered optimum for routine environmental measurements in industrial laboratories. It should be recognized that the LLD is defined as a before the fact limit representing the capability of a measurement system and not as an after the fact limit for a particular measurement.

Detailed discussion of the LLD, and other detection limits, can be found in HASL Procedures Manual, HASL-300 (revised annually), Currie, LA., "Limits for Qualitative Detection and Quantitative Determination - Application to Radiochemistry," Anal. Chem. 40, 586-93 (1968), and Hartwell, J.K., "Detection Limits for Radioanalytical Counting Techniques," Atlantic Richfield Hanford Company Report ARH-SA-215 (June 1975).

12.5 RADIOLOGICAL ENVIRONMENTAL MONITORING PROGRAM (Continued)

Interpretations

12.5.1.D Table 12.5-1 requires "one sample of each community drinking water supply downstream of the plant within 10 kilometers." Drinking water supply is defined as water taken from rivers, lakes, or reservoirs (not well water) which is used for drinking.

TABLE 12.5-1

RADIOLOGICAL ENVIRONMENTAL MONITORING PROGRAM

EXPOSURE PATHWAY AND/ OR SAMPLE	NUMBER OF REPRESENTATIVE SAMPLES AND SAMPLE LOCATIONS[1]	SAMPLING AND COLLECTION FREQUENCY	TYPE AND FREQUENCY OF ANALYSIS
1. Airborne Radioiodine and Particulates	Samples from a total of eight locations: a. Indicator- Near Field Four samples from locations within 4 km (2.5 mi) in different sectors. b. Indicator- Far Field Four additional locations within 4 to 10 km (2.5 to 6.2 mi) in different sectors. c. Control One sample from a control location within 10 to 30 km (6.2 to 18.6 mi).	*Continuous* particulate sampler operation with sample collection weekly, or more frequently if required due to dust loading, and radioiodine canister collection biweekly.	Radioiodine Canister: I-131 analysis biweekly on near field samples and control.[2] Particulate Sampler: Gross beta analysis following weekly filter change[3] and gamma isotopic analysis[4] quarterly on composite filters by location on near field samples and control.[2]

TABLE 12.5-1 (Continued)

RADIOLOGICAL ENVIRONMENTAL MONITORING PROGRAM

EXPOSURE PATHWAY AND/ OR SAMPLE	NUMBER OF REPRESENTATIVE SAMPLES AND SAMPLE LOCATIONS[1]	SAMPLING AND COLLECTION FREQUENCY	TYPE AND FREQUENCY OF ANALYSIS
2. Direct Radiation[5]	Forty routine monitoring stations either with a thermoluminescent dosimeter (TLD) or with one instrument for measuring dose rate continuously, placed as follows: a. Indicator- Inner Ring (100 Series TLD) One in each meteorological sector, in the general area of the SITE BOUNDARY (0.1 to 2 miles); b. Indicator- Outer Ring (200 Series TLD) One in each meteorological sector, within 3.2 to 10 km (2 to 6.2 mi); and c. Other One at each Airborne location given in part 1.a. and 1.b. The balance of the TLDs to be placed at special interest locations beyond the Restricted Area where either a MEMBER OF THE PUBLIC or Commonwealth Edison employees have routine access. (300 Series TLD)	Quarterly	Gamma dose on each TLD quarterly.

TABLE 12.5-1 (Continued)

RADIOLOGICAL ENVIRONMENTAL MONITORING PROGRAM

EXPOSURE PATHWAY AND/ OR SAMPLE	NUMBER OF REPRESENTATIVE SAMPLES AND SAMPLE LOCATIONS[1]	SAMPLING AND COLLECTION FREQUENCY	TYPE AND FREQUENCY OF ANALYSIS
2. Direct Radiation[5] (Cont'd)	d. Control One at each Airborne control location given in part 1.c	Quarterly	Gamma dose on each TLD quarterly.
3. Waterborne a. Ground/ Well	a. Indicator Samples from three sources only if likely to be affected.[6]	Quarterly	Gamma isotopic[4] and tritium analysis quarterly.
b. Drinking[7]	a. Indicator One Sample from each community drinking water supply that could be affected by the station discharge within 10 km (6.2 mi) downstream of discharge.	Weekly grab samples.	Gross beta and gamma isotopic analyses[4] including I-131 on monthly composite; tritium analysis on quarterly composite.
c. Surface Water[7]	If no community water supply (Drinking Water) exists within 10 km downstream of discharge then surface water sampling shall be performed. a. Indicator One sample downstream	Weekly grab samples.	Gross beta and gamma isotopic analyses[4] including I-131on monthly composite; tritium analysis on quarterly composite.
d. Control Sample[7]	a. Control One surface sample upstream of discharge.	Weekly grab samples.	Gross beta and gamma isotopic analyses[4] including I-131on monthly composite; tritium analysis on quarterly composite.

TABLE 12.5-1 (Continued)

RADIOLOGICAL ENVIRONMENTAL MONITORING PROGRAM

EXPOSURE PATHWAY AND/ OR SAMPLE	NUMBER OF REPRESENTATIVE SAMPLES AND SAMPLE LOCATIONS[1]	SAMPLING AND COLLECTION FREQUENCY	TYPE AND FREQUENCY OF ANALYSIS
e. Sediment	a. Indicator At least one sample from downstream[7] area within 10 km (6.2 mi).	Semiannually.	Gamma isotopic analysis[4] semiannually.
f. Dredging Spoils	a. Indicator At least one sample of sediment from dredging within 1 mile downstream of station discharge point.	Annually when dredging occurs within past year.	Gamma isotopic[4] analysis annually.
4. Ingestion a. Milk[8]	a. Indicator Samples from milking animals from a maximum of three locations within 10 km (6.2 mi) distance. b. Control One sample from milking animals at a control location within 10 to 30 km (6.2 to 18.6 mi).	Biweekly[9] when animals are on pasture (May through October), monthly at other times (November through April).	Gamma isotopic[4] and I-131[10] analysis on each sample.
b. Fish	a. Indicator Representative samples of commercially and recreationally important species in discharge area. b. Control Representative samples of commercially and recreationally important species in control locations upstream of discharge.	Two times annually.	Gamma isotopic analysis[4] on edible portions

TABLE 12.5-1 (Continued)

RADIOLOGICAL ENVIRONMENTAL MONITORING PROGRAM

EXPOSURE PATHWAY AND/ OR SAMPLE	NUMBER OF REPRESENTATIVE SAMPLES AND SAMPLE LOCATIONS[1]	SAMPLING AND COLLECTION FREQUENCY	TYPE AND FREQUENCY OF ANALYSIS
c. Food Products	a. Indicator Two representative samples from the principal food pathways grown in each of four major quadrants within 10 km (6.2 mi): At least one root vegetable sample[11] At least one broad leaf vegetable (or vegetation)[11] b. Control Two representative samples similar to indicator samples grown within 15 to 30 km (9.3 to 18.6 mi).	Annually	Gamma isotopic[4] analysis including I-131 on each sample.

TABLE 12.5-1 (Continued)
RADIOLOGICAL ENVIRONMENTAL MONITORING PROGRAM
TABLE NOTATIONS

(1) Specific parameters of distance and direction from the centerline of the midpoint of the two units and additional description where pertinent, shall be provided for each and every sample location in Table 1.1-1 of the ODCM Station Annexes. Refer to NUREG-0133, "Preparation of Radiological Effluent Technical Specifications for Nuclear Power Plants," October 1978, and to Radiological Assessment Branch Technical Position, Revision 1, November 1979.

(2) Far field samples are analyzed when the respective near field sample results are inconsistent with previous measurements and radioactivity is confirmed as having its origin in airborne effluents from the station, or at the discretion of the Radiation Protection Director.

(3) Airborne particulate sample filters shall be analyzed for gross beta radioactivity 24 hours or more after sampling to allow for radon and thoron daughter decay. If gross beta activity in air particulate samples is greater than 10 times the yearly mean of control samples, gamma isotopic analysis shall be performed on the individual samples.

(4) Gamma isotopic analysis means the identification and quantification of gamma emitting radionuclides that may be attributable to the effluents from the station.

(5) One or more instruments, such as a pressurized ion chamber, for measuring and recording dose rate continuously may be used in place of, or in addition to, integrating dosimeters. Film badges shall not be used as dosimeters for measuring direct radiation. The 40 locations is not an absolute number. The number of direct radiation monitoring stations may be reduced according to geographical limitations; e.g., If a station is adjacent to a lake, some sectors may be over water thereby reducing the number of dosimeters which could be placed at the indicated distances. The frequency of analysis or readout for TLD systems will depend upon the characteristics of the specific system used and should be selected to obtain optimum dose information with minimal fading.

(6) Groundwater samples shall be taken when this source is tapped for drinking or irrigation purposes in areas where the hydraulic gradient or recharge properties are suitable for contamination.

(7) The "downstream" sample shall be taken in an area beyond but near the mixing zone. The "upstream sample" shall be taken at a distance beyond significant influence of the discharge. Upstream samples in an estuary must be taken far enough upstream to be beyond the station influence.

(8) If milking animals are not found in the designated indicator locations, or if the owners decline to participate in the REMP, all milk sampling may be discontinued.

(9) Biweekly refers to every two weeks.

(10) I-131 analysis means the analytical separation and counting procedure are specific for this radionuclide.

(11) One sample shall consist of a volume/weight of sample large enough to fill contractor specified container.

TABLE 12.5-2

REPORTING LEVELS FOR RADIOACTIVITY CONCENTRATIONS IN ENVIRONMENTAL SAMPLES
REPORTING LEVELS

ANALYSIS	WATER (pCi/l)	AIRBORNE PARTICULATE OR GASES (pCi/m^3)	FISH (pCi/kg, wet)	MILK (pCi/l)	FOOD PRODUCTS (pCi/kg, wet)
H-3	20,000[1]				
Mn-54	1,000		30,000		
Fe-59	400		10,000		
Co-58	1,000		30,000		
Co-60	300		10,000		
Zn-65	300		20,000		
Zr-Nb-95	400				
I-131	2[2]	0.9		3	100
Cs-134	30	10	1,000	60	1,000
Cs-137	50	20	2,000	70	2,000
Ba-La-140	200			300	

(1) For drinking water samples. This is 40 CFR Part 141 value. If no drinking water pathway exists, a value of 30,000 pCi/l may be used.

(2) If no drinking water pathway exists, a value of 20 pCi/l may be used.

TABLE 12.5-3

DETECTION CAPABILITIES FOR ENVIRONMENTAL SAMPLE ANALYSIS[1]

LOWER LIMIT OF DETECTION (LLD)[2][3]

ANALYSIS	WATER (pCi/l)	AIRBORNE PARTICULATE OR GASES (pCi/m^3)	FISH (pCi/kg, wet)	MILK (pCi/l)	FOOD PRODUCTS (pCi/kg, wet)	SEDIMENT (pCi/kg, dry)
Gross Beta	4	0.01				
H-3	2,000					
Mn-54	15		130			
Fe-59	30		260			
Co-58,60	15		130			
Zn-65	30		260			
Zr-95	30					
Nb-95	15					
I-131	1/15[4]	0.07		1	60	
Cs-134	15	0.05	130	15	60	150
Cs-137	18	0.06	150	18	80	180
Ba-140	60			60		
La-140	15			15		

TABLE 12.5-3 (Continued)
DETECTION CAPABILITIES FOR ENVIRONMENTAL SAMPLE ANALYSIS
TABLE NOTATIONS

(1) The nuclides on this list are not the only nuclides intended to be considered. Other peaks that are identifiable, together with those of the above nuclides, shall also be analyzed and reported in the Annual Radiological Environmental Operating Report.

(2) Required detection capabilities for thermoluminescent dosimeters used for environmental measurements shall be in accordance with the recommendations of Regulatory Guide 4.13.

(3) The Lower Limit of Detection (LLD) is defined, for purposes of these specifications, as the smallest concentration of radioactive material in a sample that will yield a net count, above system background, that will be detected with 95% probability with only 5% probability of falsely concluding that a blank observation represents a "real" signal.

For a particular measurement system, which may include radiochemical separation, the LLD is defined as follows:

$$LLD = \frac{4.66\ S_b + 3/t_b}{(E)\ (V)\ (2.22)\ (Y)\ (\exp(-\lambda\Delta t))}$$

$$LLD \sim \frac{4.66\ S_b}{(E)\ (V)\ (2.22)\ (Y)\ (\exp(-\lambda\Delta t))}$$

Where: $4.66\ S_b >> 3/t_b$

LLD = the "a priori" Minimum Detectable Concentration (picoCuries per unit mass or volume),

s_b = the standard deviation of the background counting rate or of the counting rate of a blank sample, as appropriate (counts per minute),

$$= \frac{\sqrt{Total\ Counts}}{t_b}$$

E = the counting efficiency(counts per disintegration),

V = the sample size (units of mass or volume),

2.22 = the number of disintegrations per minute per picoCurie,

Y = the fractional radiochemical yield, when applicable,

λ = the radioactive decay constant for the particular radionuclide (sec^{-1}),

TABLE 12.5-3 (Continued)
DETECTION CAPABILITIES FOR ENVIRONMENTAL SAMPLE ANALYSIS
TABLE NOTATIONS

t_b = counting time of the background or blank (minutes), and

Δt = the elapsed time between sample collection, or end of the sample collection period, and the time of counting (sec).

Typical values of E, V, Y, and Δt should be used in the calculation.

It should be recognized that the LLD is defined as a before the fact limit representing the capability of a measurement system and not as an after the fact limit for a particular measurement.

Analyses shall be performed in such a manner that the stated LLDs will be achieved under routine conditions. Occasionally, background fluctuations, unavoidable small sample sizes, the presence of interfering nuclides, or other uncontrollable circumstances may render these LLDs unachievable. In such cases, the contributing factors shall be identified and described in the Annual Radiological Environmental Operating Report.

Alternate LLD Methodology

An alternate methodology for LLD determination follows and is similar to the above LLD equation:

$$LLD = \frac{(2.71 + 4.65\sqrt{B}) \bullet \text{Decay}}{E\ q\ b\ Y\ t\ (2.22E06)}$$

Where:

B = background sum (counts)

E = counting efficiency, (counts detected/disintegrations)

q = sample quantity, (mass or volume)

b = abundance, (if applicable)

Y = fractional radiochemical yield or collection efficiency, (if applicable)

t = count time (minutes)

2.22E06 = number of disintegrations per minute per microCurie

$(2.71 + 4.65\sqrt{B}) = k^2 + (2k \sqrt{2} \sqrt{B})$, and k = 1.645.

(k=value of the t statistic from the single-tailed t distribution at a significance level of 0.95% and infinite degrees of freedom. This means that the LLD result represents a 95% detection probability with a 5% probability of falsely concluding that the nuclide present when it is not or that the nuclide is not present when it is.)

$\text{Decay} = e^{\lambda\Delta t} [\lambda RT/(1-e^{-\lambda RT})] [\lambda T_d/(1-e^{-\lambda Td})]$, (if applicable)

TABLE 12.5-3
DETECTION CAPABILITIES FOR ENVIRONMENTAL SAMPLE ANALYSIS
TABLE NOTATIONS

λ = radioactive decay constant, (units consistent with Δt, RT and T_d)

Δt = "delta t", or the elapsed time between sample collection or the midpoint of sample collection and the time the count is started, depending on the type of sample, (units consistent with λ)

RT = elapsed real time, or the duration of the sample count, (units consistent with λ)

T_d = sample deposition time, or the duration of analyte collection onto the sample media, (unit consistent with λ)

The LLD may be determined using installed radioanalytical software, if available. In addition to determining the correct number of channels over which to total the background sum, utilizing the software's ability to perform decay corrections (i.e. during sample collection, from sample collection to start of analysis and during counting), this alternate method will result in a more accurate determination of the LLD.

It should be recognized that the LLD is defined as a before the fact limit and not as an after the fact limit for a particular measurement.

If no drinking water pathway exists, then the value of 15 pCi/l may be used.

12.5.2 Land Use Census

Operability Requirements

12.5.2.A. A Land Use Census shall be conducted and shall identify within a distance of 10 km (6.2 miles) the location in each of the 16 meteorological sectors* of the nearest milk animal, the nearest residence**, and an enumeration of livestock. For dose calculation, a garden will be assumed at the nearest residence.

Applicability: At all times.

Action:

1. With a Land Use Census identifying a location(s) that yields a calculated dose or dose commitment, via the same exposure pathway 20% greater than at a location from which samples are currently being obtained in accordance with Section 12.5.1, add the new location(s) within 30 days to the Radiological Environmental Monitoring Program given in Chapter 11. The sampling location(s), excluding the control location, having the lowest calculated dose or dose commitment(s), via the same exposure pathway, may be deleted from this monitoring program after October 31 of the year in which this Land Use Census was conducted. Submit in the next Annual Radiological Environmental Operating Report documentation for a change in the ODCM including a revised figure(s) and table(s) for the ODCM reflecting the new location(s) with information supporting the change in sampling locations.

*This requirement may be reduced according to geographical limitations; e.g. at a lake site where some sector's will be over water.

**The nearest industrial facility shall also be documented if closer than the nearest residence.

Surveillance Requirements

12.5.2.B The Land Use Census shall be conducted during the growing season, between June 1 and October 1, at least once per 12 months using that information that will provide the best results, such as by a door-to-door survey, aerial survey, or by consulting local agriculture authorities. The results of the Land Use Census shall be included in the Annual Radiological Environmental Operating Report.

Bases

12.5.2.C This specification is provided to ensure that changes in the use of areas at and beyond the SITE BOUNDARY are identified and that modifications to the Radiological Environmental Monitoring Program given in the ODCM are made if required by the results of this census.

This census satisfies the requirements of Section IV.B.3 of Appendix I to 10 CFR Part 50. An annual garden census will not be required since the licensee will assume that there is a garden at the nearest residence in each sector for dose calculations.

12.5.3 Interlaboratory Comparison Program

Operability Requirements

12.5.3.A Analyses shall be performed on radioactive materials supplied as part of an Interlaboratory Comparison Program that is traceable to NIST.

Applicability: At all times.

Action:

1. With analyses not being performed as required above, report the corrective actions taken to prevent a recurrence to the Commission in the Annual Radiological Environmental Operating Report.

Surveillance Requirements

12.5.3.B A summary of the results obtained as part of the above required Interlaboratory Comparison Program shall be included in the Annual Radiological Environmental Operating Report.

Bases

12.5.3.C The requirement for participation in an Interlaboratory Comparison Program is provided to ensure that independent checks on the precision and accuracy of the measurements of radioactive material in environmental samples matrices are performed as part of the quality assurance program for environmental monitoring in order to demonstrate that the results are valid for the purposes of Section IV.B.2 of Appendix I to 10 CFR Part 50.

12.6 RECORDKEEPING AND REPORTING

12.6.1. Station Operating Records

1. Records and/or logs relative to the following items shall be kept in a manner convenient for review and shall be retained for at least five years.

    1. Records and periodic checks, inspection and/or calibrations performed to verify the surveillance requirements (See the applicable surveillance in the Instrumentation, Liquid Effluents, Gaseous Effluents, and Radiological Environmental Monitoring Sections) are being met. All equipment failing to meet surveillance requirements and the corrective action taken shall be recorded.

    2. Records of radioactive shipments.

2. Records and/or logs relative to the following items shall be recorded in a manner convenient for review and shall be retained for the life of the plant.

    1. Records of off-site environmental monitoring surveys.

    2. Records of radioactivity in liquid and gaseous wastes released to the environment.

    3. Records of reviews performed for changes made to the ODCM.

12.6.2. Reports

1. Radioactive Effluent Release Report*

    For Unit 1, the Radioactive Effluent Release Report covering the decommissioning activities of the unit during the previous calendar year shall be submitted in accordance with Section 6.9.A.4 of the Unit 1 Technical Specifications.

    For Units 2 and 3, the Radioactive Effluent Release Report covering the operation of the unit during the previous calendar year shall be submitted in accordance with Section 5.6.3 of the Units 2 and 3 Technical Specifications.

REVISION 3
MARCH 2003

* A single submittal may be made for a multiple unit station. The submittal should combine sections common to all units at the station; however, for units with separate radwaste systems, the submittal shall specify the releases of radioactive material from each unit.

12.6.2 Reports - (Cont'd)

2. Annual Radiological Environmental Operating Report**

Revision 3
March 2003

For Unit 1, the Annual Radiological Environmental Operating Report covering the decommissioning activities of the unit during the previous calendar year shall be submitted in accordance with Section 6.9.A.3 of the Unit 1 Technical Specifications.

For Units 2 and 3, the Annual Radiological Environmental Operating Report covering the operation of the unit during the previous calendar year shall be submitted in accordance with Section 5.6.2 of the Units 2 and 3 Technical Specifications. A detailed listing of the requirement of the report is given below:

(a) Results of environmental sampling summarized on a quarterly basis following the format of Regulatory Guide 4.8 Table 1 (December 1975); (individual sample results will be retained at the station);

In the event that some results are not available for inclusion with the report, the report shall be submitted noting and explaining the reasons for the missing results. Summaries, interpretations, and analysis of trends of the results are to be provided.

(b) An assessment of the monitoring results and radiation dose via the principal pathways of exposure resulting from plant emissions of radioactivity including the maximum noble gas gamma and beta air doses in the unrestricted area. The assessment of radiation doses shall be performed in accordance with the ODCM.

(c) Results of the census to determine the locations of animals producing milk for human consumption, and the pasture season feeding practices at dairies in the monitoring program.

(d) The reason for the omission if the nearest dairy to the station is not in the monitoring program.

** A single submittal may be made for a multiple unit station.
The submittal should combine sections common to all units at the station.

12.6.2 Reports - (Cont'd)

(e) An annual summary of meteorological conditions concurrent with the releases of gaseous effluents in the form of joint frequency distributions of wind speed, wind direction, and atmospheric stability.

(f) The results of the interlaboratory comparison program described in Section 12.5.3.

(g) The results of the 40 CFR Part 190 uranium fuel cycle dose analysis for each calendar year.

(h) A summary of the monitoring program, including maps showing sampling locations and tables giving distance and direction of sampling locations from the station.

3. Non-Routine Environmental Report

(a) If a confirmed measured radionuclide concentration in an environmental sampling medium averaged over any calendar quarter sampling period exceeds the reporting level given in Table 12.5-2 and if the radioactivity is attributable to plant operation, a written report shall be submitted to the Regional Administrator of NRC Regional Office, with a copy to the Director, Office of Nuclear Reactor Regulation, within 30 days from the end of the quarter. When more than one of the radionuclides in Table 12.5-2 are detected in the medium, the reporting level shall have been exceeded if $\Sigma C_i/(RL)_i$ is equal to or greater than 1 where C is the concentration of the ith radionuclide in the medium and RL is the reporting level of radionuclide i.

(b) If radionuclides other than those in Table 12.5-2 are detected and are due to plant effluents, a reporting level is exceeded if the potential annual dose to an individual is equal to or greater than the design objective doses of 10 CFR Part 50, Appendix I.

(c) This report shall include an evaluation of any release conditions, environmental factors, or other aspects necessary to explain the anomalous affect.

12.6.3. Offsite Dose Calculation Manual (ODCM)

1. The ODCM shall contain the methodology and parameters used in the calculation of offsite doses due to radioactive gaseous and liquid effluents, in the calculation of gaseous and liquid effluent monitoring alarm and trip setpoints, and in the conduct of the Radiological Environmental Monitoring Program.

2. The ODCM shall also contain the radioactive effluent controls and radiological environmental monitoring activities (described in Section 12.2 - 12.5) and descriptions of the information that should be included in the Annual Radioactive Effluent Release and Radiological Environmental Operating Reports required by Sections 12.6.2.1 and 12.6.2.2.

12.6.3 Offsite Dose Calculation Manual (ODCM)-(Cont'd)

3. Licensee initiated changes to the ODCM:

(1) Shall be documented and records of reviews performed shall be retained. This documentation shall contain:

(a) Sufficient information to support the change together with appropriate analyses or evaluations justifying the change(s); and

(b) A determination that the change will maintain the level of radioactive effluent control required by 10 CFR Part 20.1302, 40 CFR Part 190, 10 CFR Part 50.36a, and 10 CFR 50, Appendix I, and do not adversely impact the accuracy or reliability of effluent, dose, or set point calculations.

(2) Shall become effective after approval of the Unit 2/3 Station Manager.

(3) Shall be submitted to the NRC in the form of a complete, legible copy of the entire ODCM as a part of or concurrent with the Radioactive Effluent Release Report for the period of the report in which any change to the ODCM was made. Each change shall be identified by markings in the margin of the affected pages, clearly indicating the area of the page that was changed, and shall indicate the date (i.e. month and year) the change was implemented.

REVISION 3
MARCH 2003

12.6.4. Major Changes to Radioactive Waste Treatment Systems (Liquid and Gaseous)

NOTE: This information may be submitted as part of the annual FSAR update.

1. Licensee initiated major changes to the radioactive waste systems may be made provided:

The change is reported in the Monthly Operating Report for the period in which the evaluation was reviewed by Independent Technical Review. The discussion of each change shall contain:

(1) A summary of the evaluation that led to the determination that the change could be made in accordance with 10 CFR Part 50.59;

(2) Sufficient detailed information to support the reason for the change;

(3) A detailed description of the equipment, components, and process involved and the interfaces with other plant systems;

(4) An evaluation of the change which shows the predicted releases of radioactive materials in liquid and gaseous effluents that differ from those previously predicted in the license application and amendments;

(5) A comparison of the predicted releases of radioactive materials in liquid and gaseous effluents to the actual releases for the period in which the changes were made;

12.6.4. Major Changes to Radioactive Waste Treatment Systems (Liquid and Gaseous) (Cont'd)

(6) An estimate of the exposure to plant operating personnel as a result of the change; and

(7) Documentation of the fact that the change was reviewed and found acceptable by Independent Technical Review.

2. The change shall become effective upon review and acceptance by Independent Technical Review.

DRESDEN ANNEX INDEX

PAGE	REVISION	PAGE	REVISION
APPENDIX F			
F-i	2	F-43	2
F-ii	2	F-44	2
F-iii	2	F-45	2
F-iv	2	F-46	2
F-1	2	F-47	2
F-2	2	F-48	2
F-3	2	F-49	2
F-4	2		
F-5	2		
F-6	2		
F-7	2		
F-8	2		
F-9	2		
F-10	2		
F-11	2		
F-12	2		
F-13	2		
F-14	2		
F-15	2		
F-16	2		
F-17	2		
F-18	2		
F-19	2		
F-20	2		
F-21	2		
F-22	2		
F-23	2		
F-24	2		
F-25	2		
F-26	2		
F-27	2		
F-28	2		
F-29	2		
F-30	2		
F-31	2		
F-32	2		
F-33	2		
F-34	2		
F-35	2		
F-36	2		
F-37	2		
F-38	2		
F-39	2		
F-40	2		
F-41	2		
F-42	2		

APPENDIX F

STATION-SPECIFIC DATA FOR DRESDEN UNITS 1, 2, AND 3

TABLE OF CONTENTS

	PAGE
F.1 INTRODUCTION	F-1
F.2 REFERENCES	F-1
DRESDEN 1	
DRESDEN 1, 2, 3	

APPENDIX F
LIST OF TABLES

NUMBER	TITLE	PAGE
F-1	Aquatic Environmental Dose Parameters	F-2
F-2	Station Characteristics	F-3
F-3	Critical Ranges	F-4
F-4	Average Wind Speeds	F-5
F-5	X/Q and D/Q Maxima At or Beyond the Unrestricted Area Boundary	F-6
F-5a	X/Q and D/Q Maxima At or Beyond the Restricted Area Boundary	F-7
F-6	D/Q at the Nearest Milk Cow and Meat Animal Locations Within 5 Miles	F-8
F-7	Maximum Offsite Finite Plume Gamma Dose Factors Based on 1 cm Depth at the Unrestricted Area Boundary for Selected Nuclides	F-9
F-7a	Maximum Offsite Finite Plume Gamma Dose Factors Based on 1 cm Depth at the Restricted Area Boundary for Selected Nuclides	F-24
F-8	Parameters for Calculation of N-16 Skyshine Radiation from Dresden 2/3	F-39
Supplemental Tables		
A	Elevated Level Joint Frequency Distribution Table Summary - 300 Foot Elevation Data	F-40
	-Summary Table of Percent by Direction and Class -Summary Table of Percent by Direction and Speed -Summary Table of Percent by Speed and Class	
B	Mixed Mode Joint Frequency Distribution Table Summaries - 150 and 35 Foot Elevation Data	F-42
	-Summary Table of Percent by Direction and Class -Summary Table of Percent by Direction and Speed -Summary Table of Percent by Speed and Class	
C	Ground Level Joint Frequency Distribution Table Summary - 35 Foot Elevation Data	F-46
	-Summary Table of Percent by Direction and Class -Summary Table of Percent by Direction and Speed -Summary Table of Percent by Speed and Class	

APPENDIX F
LIST OF FIGURES

NUMBER	TITLE	PAGE
F-1	Unrestricted Area Boundary	F-48
F-2	Restricted Area Boundary	F-49

APPENDIX F

STATION-SPECIFIC DATA FOR DRESDEN UNITS 1, 2, AND 3

F.1 INTRODUCTION

This appendix contains data relevant to the Dresden site. Included are a diagram of the unrestricted and restricted area boundary and tables of values of parameters used in offsite dose assessment.

F.2 REFERENCES FOR DRESDEN 1

1. "Determination of Radial Distances from Exhaust Stack to Closest Offsite Location," Sargent and Lundy, Analysis and Technology Division, Dresden Calculation ATD-0033, Revision 0, December 26, 1991.

2. "CECo ODCM Appendix F Tables for Dresden 1," Sargent & Lundy, Analysis and Technology Division, Dresden Calculation ATD-0125, Revision 0, June 11, 1992.

REFERENCES FOR DRESDEN 2 and 3

1. Sargent & Lundy, Nuclear Safeguards and Licensing Division, Calculation, "Appendix I Technical Specification Tables," Revision 2, July 10, 1979.

2. "CECo ODCM Appendix F Tables for Dresden 2/3," Sargent & Lundy, Analysis and Technology Division, Dresden Calculation ATD-0145, Revision 0, 1 and 2.

3. "Verification of Environmental Parameters used for Commonwealth Edison Company's Offsite Dose Calculation," NUS Corporation, 1988.

4. "Verification of Environmental Parameters used for Commonwealth Edison Company's Offsite Dose Calculation," NUTECH, 1992.

5. "Radial Distance to Restricted Area Boundary," Sargent and Lundy, Analysis and Technology Division, Dresden Calculation ATD-0093, Revision 0, April 24, 1992.

Table F-1

Aquatic Environmental Dose Parameters for Dresden 1, 2, 3

General Information[a]

The station liquid discharge flows into the Illinois River. The nearest public potable water intake is at Peoria, 106 river miles downstream of the station.

There is no irrigation occurring on the Kankakee, Des Plaines, or Illinois Rivers downstream of the station.

Recreation includes one or more of the following: boating, waterskiing, swimming, and sport fishing.

Downstream dams on the Illinois River within 50 miles of the station are located as follows:

- At Dresden Island
- At Marseilles
- At Starved Rock

This is based on information in Figure 2.2.6-1 of the Dresden Updated Final Safety Analysis Report (update through Rev. 5, June 1987) and in Section 2.4.1.1 and Figure 2.4-2 of the LaSalle Environmental Report.

Water and Fish Ingestion Parameters

Parameter[b]	Value
$1/M^w$, $1/M^f$	1.0
F^w, cfs	1.85E4
F^f, cfs	1.04E4
t^f, hr[c]	24.0
t^w, hr[d]	106.0

Limits on Radioactivity in Unprotected Outdoor Tanks[e]

Refer to Section 3.8 of the Technical Specifications of Units 1, 2, and 3.

---

[a]This is based on information in the Dresden Station Safety Analysis Report (SAR), Section 2.5, Dresden Station Water Flow Schematic, and Braidwood and LaSalle Stations' collective data.

[b]The parameters are defined in Section A.2.1 of Appendix A.
[c]t^f (hr) = 24 hr (all stations) for the fish ingestion pathway
[d]t^w (hr) = 106 (distance to Peoria is 106 miles; flow rate of 1 mph assumed)
[e]See Section A.2.4 of Appendix A.

Table F-2

Station Characteristics for Dresden 1, 2, 3

STATION: Dresden Nuclear Power Station

LOCATION: Morris, Illinois

CHARACTERISTICS OF ELEVATED RELEASE POINT

1) Release Height = U1 91.44 m[a] / U2/3 94.49 m[a]
2) Diameter = U1 1.40 m / U2/3 3.35 m
3) Exit Speed = U1 17.9 ms^{-1a} / U2/3 16.6 ms^{-1a}
4) Heat Content = 70 KCal s^{-1a}

CHARACTERISTICS OF VENT STACK RELEASE POINT

1) Release Height = 48.77 m[a]
2) Diameter = 2.74 m
3) Exit Speed = 12.0 ms^{-1a}

CHARACTERISTICS OF GROUND LEVEL RELEASE

1) Release Height = 0 m
2) Building Factor (D) = 42.8 m[a]

METEOROLOGICAL DATA

A 400 ft Tower is Located 800 m WSW of elevated release point

---

Tower Data Used in Calculations

Release Point	Wind Speed and Direction	Differential Temperature
Elevated	300 ft	300-35 ft
Vent	150 ft	150-35 ft
Ground	35 ft	150-35 ft

[a]Used in calculating the meteorological and dose factors in Tables F-5, F-6, and F-7. See Sections B.3 through B.6 of Appendix B.

Table F-3

Critical Ranges

Direction	Unrestricted Area Boundary[a] (m)	Restricted Nearest Area Boundary (m)	Resident[b] (m)	Nearest Dairy Farm Within 5 Miles[c] (m)
N	768	466	3700	None
NNE	1207	698	1300	None
NE	1100	646	1300	None
ENE	1244	646	1300	None
E	1000	689	1800	None
ESE	988	661	1600	None
SE	1000	664	1000	None
SSE	792	744	800	None
S	841	814	800	None
SSW	853	789	5300	None
SW	1024	414	5800	None
WSW	1170	360	8000	None
W	1756	454	5600	None
WNW	1219	469	6000	None
NW	756	482	4200	None
NNW	671	466	1300	None

[a] Nearest land in unrestricted area. Used in calculating the meteorological dose factors in Tables F-5 and F-7. See Sections B.3 through B.6 of Appendix B.

[b] 2002 annual survey by Environmental, Inc. Midwest Laboratory. The distances are rounded to the nearest 100 meters.

[c] 2002 annual milch animal census, by Environmental, Inc. Midwest Laboratory. Used in calculating the D/Q values in Table F-6. The distances are rounded to the nearest 100 meters. A default value of 8000 meters is used when there are no dairies within 5 miles.

Table F-4

Average Wind Speeds for Dresden 1, 2, and 3

Downwind Direction	Average Wind Speed (m/sec)[a] Elevated	Mixed Mode[b]	Ground Level
N	7.3	5.5	4.3
NNE	7.4	5.3	4.1
NE	6.9	5.0	3.7
ENE	6.4	4.9	4.0
E	7.1	5.3	4.1
ESE	7.2	5.3	4.1
SE	6.4	5.1	3.7
SSE	6.4	4.8	3.4
S	5.9	4.4	3.1
SSW	5.9	4.5	3.0
SW	5.7	4.4	3.0
WSW	5.1	4.0	2.8
W	5.5	4.4	3.2
WNW	5.9	4.4	3.0
NW	5.7	4.4	3.4
NNW	6.3	4.9	3.8

[a] Based on Dresden site meteorological data, January 1978 through December 1987. Calculated in References 3 (unit 1) and 2 (units 2/3) of Section F.2 using formulas in Section B.1.3 of Appendix B.

[b] The mixed mode values apply only to Dresden 2/3. Mixed mode values are not needed for Dresden 1 since there is no mixed mode release point.

Table F-5

X/Q and D/Q Maxima at or Beyond the Unrestricted Area Boundary

Downwind Direction	Elevated(Stack) Release				Mixed Mode(Vent) Release			Ground Level Release		
	Radius (meters)	X/Q (sec/m**3)	Radius (meters)	D/Q (1/m**2)	Radius (meters)	X/Q (sec/m**3)	D/Q (1/m**2)	Radius (meters)	X/Q (sec/m**3)	D/Q (1/m**2)
N	4400.	1.470E-08	768.	8.955E-10	768.	4.752E-07	6.331E-09	768.	3.363E-06	1.840E-08
NNE	4023.	1.502E-08	1207.	8.387E-10	1207.	2.440E-07	3.028E-09	1207.	1.565E-06	8.011E-09
NE	4400.	1.231E-08	1100.	7.495E-10	1100.	2.409E-07	2.716E-09	1100.	1.805E-06	7.715E-09
ENE	4023.	1.100E-08	1244.	6.629E-10	1244.	1.370E-07	1.982E-09	1244.	8.865E-07	4.617E-09
E	3600.	1.517E-08	1000.	1.036E-09	1000.	3.326E-07	4.215E-09	1000.	1.983E-06	1.114E-08
ESE	3600.	1.417E-08	988.	1.104E-09	988.	2.741E-07	3.956E-09	988.	1.914E-06	1.042E-08
SE	3600.	1.350E-08	1000.	1.111E-09	1000.	2.357E-07	3.527E-09	1000.	2.027E-06	9.865E-09
SSE	3219.	1.298E-08	792.	1.257E-09	792.	2.876E-07	4.369E-09	792.	2.725E-06	1.248E-08
S	4023.	9.552E-09	841.	8.039E-10	841.	1.891E-07	2.719E-09	841.	2.060E-06	8.371E-09
SSW	4023.	9.123E-09	853.	7.329E-10	853.	1.900E-07	2.436E-09	853.	1.923E-06	7.879E-09
SW	4400.	1.085E-08	1024.	6.659E-10	1024.	1.538E-07	1.887E-09	1024.	1.639E-06	6.659E-09
WSW	4400.	1.232E-08	1170.	6.123E-10	1170.	1.207E-07	1.339E-09	1170.	1.162E-06	4.615E-09
W	4828.	1.105E-08	1756.	4.566E-10	1756.	1.190E-07	1.028E-09	1756.	7.763E-07	3.122E-09
WNW	4828.	8.765E-09	1219.	4.387E-10	1219.	1.833E-07	1.685E-09	1219.	1.798E-06	6.402E-09
NW	4828.	9.337E-09	756.	5.904E-10	756.	2.478E-07	2.791E-09	756.	2.391E-06	1.070E-08
NNW	4400.	1.083E-08	671.	6.750E-10	671.	4.310E-07	5.167E-09	671.	3.546E-06	1.901E-08

DRESDEN SITE METEOROLOGICAL DATA 1/78 - 12/87

Note: Based on Reference 2 of Section F.2 and the formulas in Sections B.3 and B.4 of Appendix B. Used for beta air, beta skin, and inhalation dose pathways. See sections A.1.2, A.1.3 and A.1.4.2 of Appendix A. Used for produce and leafy vegetable pathways. See A.1.4 of Appendix A.

Table F-5a

X/Q and D/Q Maxima at or Beyond the Restricted Area Boundary

Downwind Direction	Elevated(Stack) Release				Mixed Mode(Vent) Release			Ground Level Release		
	Radius (meters)	X/Q (sec/m**3)	Radius (meters)	D/Q (1/m**2)	Radius (meters)	X/Q (sec/m**3)	D/Q (1/m**2)	Radius (meters)	X/Q (sec/m**3)	D/Q (1/m**2)
N	4400.	1.470E-08	466.	1.046E-09	466.	9.968E-07	1.232E-08	466.	7.375E-06	4.036E-08
NNE	4023.	1.502E-08	698.	1.051E-09	698.	5.152E-07	6.619E-09	698.	3.645E-06	1.961E-08
NE	4400.	1.231E-08	646.	9.588E-10	646.	5.276E-07	5.692E-09	646.	4.202E-06	1.827E-08
ENE	4023.	1.100E-08	646.	8.886E-10	646.	3.461E-07	4.918E-09	646.	2.474E-06	1.345E-08
E	3600.	1.517E-08	689.	1.217E-09	689.	5.525E-07	7.074E-09	689.	3.492E-06	2.040E-08
ESE	3600.	1.417E-08	661.	1.341E-09	661.	4.830E-07	6.936E-09	661.	3.564E-06	1.997E-08
SE	3600.	1.350E-08	664.	1.385E-09	664.	4.187E-07	6.112E-09	664.	3.877E-06	1.916E-08
SSE	3219.	1.298E-08	744.	1.299E-09	744.	3.153E-07	4.734E-09	744.	3.016E-06	1.380E-08
S	4023.	9.552E-09	814.	8.181E-10	814.	1.977E-07	2.834E-09	814.	2.165E-06	8.827E-09
SSW	4023.	9.123E-09	789.	7.631E-10	789.	2.111E-07	2.694E-09	789.	2.169E-06	8.941E-09
SW	4400.	1.085E-08	420.	8.897E-10	414.	5.193E-07	5.643E-09	414.	6.356E-06	2.796E-08
WSW	4400.	1.232E-08	420.	7.963E-10	360.	5.431E-07	5.055E-09	360.	7.095E-06	2.980E-08
W	4828.	1.105E-08	454.	6.582E-10	454.	5.736E-07	5.881E-09	454.	5.859E-06	2.829E-08
WNW	4828.	8.765E-09	469.	6.124E-10	469.	7.098E-07	5.907E-09	469.	8.176E-06	2.969E-08
NW	4828.	9.337E-09	482.	6.915E-10	482.	4.885E-07	4.835E-09	482.	4.860E-06	2.173E-08
NNW	4400.	1.083E-08	466.	7.491E-10	466.	7.327E-07	8.268E-09	466.	6.214E-06	3.358E-08

DRESDEN SITE METEOROLOGICAL DATA 1/78 - 12/87

Table F-6

DIQ at the Nearest Milk Cow and Meat Animal Locations within 5 miles

Downwind Direction	Nearest Milk Cow D/Q(1/m**2) Radius (meters)	Elevated Release	Mixed Release	Ground Release	Nearest Meat Animal D/Q(1/m**2) Radius (meters)	Elevated Release	Mixed Release	Ground Release
N	8000.	1.073E-10	1.533E-10	3.231E-10	2300.	5.089E-10	1.232 E-09	2.916 E-09
NNE	8000.	1.103E-10	1.411E-10	2.954E-10	8000.	1.103 E-10	1.411 E-10	2.954 E-10
NE	8000.	9.092E-11	1.115E-10	2.434E-10	4000.	2.442 E-10	3.551 E-10	8.283 E-10
ENE	8000.	8.435E-11	9.923E-11	1.792E-10	7600.	9.183 E-10	1.083 E-10	1.965 E-10
E	8000.	1.282E-10	1.521E-10	3.011E-10	8000.	1.282 E-10	1.521 E-10	3.011 E-10
ESE	8000.	1.241E-10	1.363E-10	2.759E-10	8000.	1.241 E-10	1.363 E-10	2.759 E-10
SE	8000.	1.146E-10	1.308E-10	2.665E-10	8000.	1.146 E-10	1.308 E-10	2.665 E-10
SSE	8000.	1.126E-10	1.213E-10	2.303E-10	8000.	1.126 E-10	1.213 E-10	2.303 E-10
S	8000.	7.758E-11	8.690E-11	1.703E-10	8000.	7.683 E-11	8.604 E-11	1.685 E-10
SSW	8000.	7.408E-11	7.845E-11	1.640E-10	8000.	7.337 E-11	7.767 E-11	1.623 E-10
SW	8000.	8.618E-11	8.357E-11	1.870E-10	8000.	8.618 E-11	8.375 E-11	1.870 E-10
WSW	8000.	9.051E-11	7.512E-11	1.615E-10	8000.	9.051 E-11	7.512 E-11	1.615 E-10
W	8000.	7.826E-11	9.150E-11	2.177E-10	800.	5.665 E-10	2.944 E-09	1.160 E-08
WNW	8000.	5.945E-11	8.480E-11	2.401E-10	800.	5.121 E-10	3.015 E-09	1.280 E-08
NW	8000.	6.284E-11	7.514E-11	1.832E-10	800.	5.753 E-10	2.596 E-09	9.768 E-09
NNW	8000.	7.599E-11	1.095E-10	2.688E-10	1600.	5.010 E-10	1.505 E-09	4.520 E-09

DRESDEN SITE METEOROLOGICAL DATA 1/78 - *12/87*

Note: Based on Reference 2 of Section F.2 and the formulas in Section B.4 of Appendix B.

Table F-7

Maximum Offsite Finite Plume Gamma Dose Factors Based on 1 cm Depth at the Unrestricted Area Boundary for Kr-83m

Downwind Direction	Unrestricted Area Bound (meters)	Elevated(Stack) Release Radius (meters)	S (mrad/yr)/(uCi/sec)	SBAR (mrad/yr)/(uCi/sec)	Mixed Mode(Vent) Release Radius (meters)	V (mrad/yr)/(uCi/sec)	VBAR (mrad/yr)/(uCi/sec)	Ground Level Release Radius (meters)	G (mrad/yr)/(uCi/sec)	GBAR (mrad/yr)/(uCi/sec)
N	768.	768.	1.111E-06	8.377E-07	768.	5.804E-05	4.377E-05	768.	3.601E-04	2.715E-04
NNE	1207.	1207.	1.254E-06	9.453E-07	1207.	2.901E-05	2.188E-05	1207.	1.645E-04	1.240E-04
NE	1100.	1100.	1.062E-06	8.010E-07	1100.	2.861E-05	2.157E-05	1100.	1.855E-04	1.399E-04
ENE	1244.	1244.	1.018E-06	7.677E-07	1244.	1.595E-05	1.202E-05	1244.	8.930E-05	6.733E-05
E	1000.	1000.	1.301E-06	9.808E-07	1000.	3.900E-05	2.941E-05	1000.	2.092E-04	1.577E-04
ESE	988.	988.	1.336E-06	1.007E-06	988.	3.237E-05	2.441E-05	988.	2.005E-04	1.512E-04
SE	1000.	1000.	1.414E-06	1.066E-06	1000.	2.828E-05	2.133E-05	1000.	2.078E-04	1.567E-04
SSE	792.	792.	1.538E-06	1.160E-06	792.	3.462E-05	2.610E-05	792.	2.798E-04	2.110E-04
S	841.	841.	1.095E-06	8.259E-07	841.	2.335E-05	1.761E-05	841.	2.124E-04	1.601E-04
SSW	853.	853.	1.009E-06	7.606E-07	853.	2.332E-05	1.759E-05	853.	1.978E-04	1.491E-04
SW	1024.	1024.	8.474E-07	6.389E-07	1024.	1.920E-05	1.448E-05	1024.	1.648E-04	1.243E-04
WSW	1170.	1170.	8.268E-07	6.234E-07	1170.	1.520E-05	1.146E-05	1170.	1.147E-04	8.650E-05
W	1756.	1756.	8.303E-07	6.261E-07	1756.	1.322E-05	9.966E-06	1756.	7.461E-05	5.626E-05
WNW	1219.	1219.	6.944E-07	5.236E-07	1219.	2.191E-05	1.652E-05	1219.	1.789E-04	1.349E-04
NW	756.	756.	7.464E-07	5.628E-07	756.	3.036E-05	2.289E-05	756.	2.549E-04	1.922E-04
NNW	671.	671.	7.749E-07	5.843E-07	671.	5.274E-05	3.977E-05	671.	3.846E-04	2.900E-04

DRESDEN SITE METEOROLOGICAL DATA 1/78 - 12/87

Note: Based on References 1 and 2 of Section F.2 and the formulas in Sections B.5 and B.6 of Appendix B.

Table F-7 (Continued)

Maximum Offsite Finite Plume Gamma Dose Factors Based on 1 cm Depth at the Unrestricted Area Boundary for Kr-85m

Downwind Direction	Unrestricted Area Bound (meters)	Elevated(Stack) Release Radius (meters)	S (mrad/yr)/(uCi/sec)	SBAR	Mixed Mode(Vent) Release Radius (meters)	V (mrad/yr)/(uCi/sec)	VBAR	Ground Level Release Radius (meters)	G (mrad/yr)/(uCi/sec)	GBAR
N	768.	768.	1.399E-04	1.354E-04	768.	6.020E-04	5.795E-04	768.	1.896E-03	1.815E-03
NNE	1207.	1207.	9.359E-05	9.053E-05	1207.	3.303E-04	3.181E-04	1207.	9.659E-04	9.257E-04
NE	1100.	1100.	9.061E-05	8.765E-05	1100.	3.296E-04	3.175E-04	1100.	1.053E-03	1.009E-03
ENE	1244.	1244.	7.359E-05	7.118E-05	1244.	2.088E-04	2.012E-04	1244.	5.484E-04	5.257E-04
E	1000.	1000.	1.064E-04	1.030E-04	1000.	4.299E-04	4.140E-04	1000.	1.216E-03	1.165E-03
ESE	988.	988.	9.782E-05	9.462E-05	988.	3.568E-04	3.436E-04	988.	1.154E-03	1.106E-03
SE	1000.	1000.	9.428E-05	9.118E-05	1000.	3.260E-04	3.140E-04	1000.	1.186E-03	1.136E-03
SSE	792.	792.	1.046E-04	1.012E-04	792.	3.889E-04	3.745E-04	792.	1.497E-03	1.433E-03
S	841.	841.	8.695E-05	8.411E-05	841.	3.045E-04	2.934E-04	841.	1.207E-03	1.156E-03
SSW	853.	853.	8.163E-05	7.896E-05	853.	2.929E-04	2.823E-04	853.	1.118E-03	1.071E-03
SW	1024.	1024.	7.425E-05	7.182E-05	1024.	2.735E-04	2.637E-04	1024.	1.008E-03	9.664E-04
WSW	1170.	1170.	7.278E-05	7.041E-05	1170.	2.394E-04	2.309E-04	1170.	7.281E-04	6.982E-04
W	1756.	1756.	4.764E-05	4.607E-05	1756.	1.734E-04	1.671E-04	1756.	5.186E-04	4.977E-04
WNW	1219.	1219.	5.560E-05	5.379E-05	1219.	2.513E-04	2.420E-04	1219.	1.060E-03	1.016E-03
NW	756.	756.	9.757E-05	9.441E-05	756.	3.808E-04	3.669E-04	756.	1.353E-03	1.295E-03
NNW	671.	671.	1.240E-04	1.200E-04	671.	5.578E-04	5.371E-04	671.	1.955E-03	1.871E-03

DRESDEN SITE METEOROLOGICAL DATA 1/78 - 12/87

Table F-7 (Continued)

Maximum Offsite Finite Plume Gamma Dose Factors Based on 1 cm Depth at the Unrestricted Area Boundary for Kr-85

Downwind Direction	Unrestricted Area Bound (meters)	Elevated(Stack) Release Radius (meters)	S (mrad/yr)/(uCi/sec)	SBAR	Mixed Mode(Vent) Release Radius (meters)	V (mrad/yr)/(uCi/sec)	VBAR	Ground Level Release Radius (meters)	G (mrad/yr)/(uCi/sec)	GBAR
N	768.	768.	1.955E-06	1.890E-06	768.	6.993E-06	6.763E-06	768.	2.088E-05	2.019E-05
NNE	1207.	1207.	1.281E-06	1.239E-06	1207.	3.867E-06	3.740E-06	1207.	1.077E-05	1.041E-05
NE	1100.	1100.	1.253E-06	1.212E-06	1100.	3.897E-06	3.768E-06	1100.	1.187E-05	1.147E-05
ENE	1244.	1244.	1.020E-06	9.860E-07	1244.	2.489E-06	2.407E-06	1244.	6.226E-06	6.021E-06
E	1000.	1000.	1.472E-06	1.424E-06	1000.	5.039E-06	4.873E-06	1000.	1.354E-05	1.309E-05
ESE	988.	988.	1.348E-06	1.304E-06	988.	4.188E-06	4.050E-06	988.	1.287E-05	1.245E-05
SE	1000.	1000.	1.300E-06	1.257E-06	1000.	3.825E-06	3.698E-06	1000.	1.330E-05	1.286E-05
SSE	792.	792.	1.448E-06	1.400E-06	792.	4.575E-06	4.424E-06	792.	1.663E-05	1.608E-05
S	841.	841.	1.240E-06	1.199E-06	841.	3.624E-06	3.504E-06	841.	1.358E-05	1.313E-05
SSW	853.	853.	1.157E-06	1.119E-06	853.	3.469E-06	3.354E-06	853.	1.252E-05	1.210E-05
SW	1024.	1024.	1.047E-06	1.012E-06	1024.	3.279E-06	3.170E-06	1024.	1.141E-05	1.104E-05
WSW	1170.	1170.	1.022E-06	9.885E-07	1170.	2.863E-06	2.769E-06	1170.	8.279E-06	8.006E-06
W	1756.	1756.	6.701E-07	6.480E-07	1756.	2.062E-06	1.994E-06	1756.	5.967E-06	5.770E-06
WNW	1219.	1219.	7.759E-07	7.503E-07	1219.	2.953E-06	2.856E-06	1219.	1.208E-05	1.168E-05
NW	756.	756.	1.375E-06	1.330E-06	756.	4.511E-06	4.362E-06	756.	1.501E-05	1.451E-05
NNW	671.	671.	1.750E-06	1.692E-06	671.	6.521E-06	6.306E-06	671.	2.132E-05	2.062E-05

DRESDEN SITE METEOROLOGICAL DATA 1/78 - 12/87

Table F-7 (Continued)

Maximum Offsite Finite Plume Gamma Dose Factors Based on 1 cm Depth at the Unrestricted Area Boundary for Kr-87

Downwind Direction	Unrestricted Area Bound (meters)	Elevated(Stack) Release Radius (meters)	S (mrad/yr)/(uCi/sec)	SBAR	Mixed Mode(Vent) Release Radius (meters)	V (mrad/yr)/(uCi/sec)	VBAR	Ground Level Release Radius (meters)	G (mrad/yr)/(uCi/sec)	GBAR
N	768.	768.	6.917E-04	6.720E-04	768.	2.070E-03	2.010E-03	768.	5.546E-03	5.385E-03
NNE	1207.	1207.	4.420E-04	4.294E-04	1207.	1.116E-03	1.084E-03	1207.	2.791E-03	2.710E-03
NE	1100.	1100.	4.363E-04	4.239E-04	1100.	1.116E-03	1.083E-03	1100.	2.958E-03	2.872E-03
ENE	1244.	1244.	3.520E-04	3.419E-04	1244.	7.110E-04	6.905E-04	1244.	1.547E-03	1.502E-03
E	1000.	1000.	5.151E-04	5.004E-04	1000.	1.453E-03	1.411E-03	1000.	3.526E-03	3.423E-03
ESE	988.	988.	4.711E-04	4.577E-04	988.	1.210E-03	1.176E-03	988.	3.332E-03	3.236E-03
SE	1000.	1000.	4.545E-04	4.416E-04	1000.	1.122E-03	1.089E-03	1000.	3.382E-03	3.283E-03
SSE	792.	792.	5.140E-04	4.994E-04	792.	1.351E-03	1.312E-03	792.	4.329E-03	4.203E-03
S	841.	841.	4.278E-04	4.157E-04	841.	1.065E-03	1.034E-03	841.	3.397E-03	3.298E-03
SSW	853.	853.	4.031E-04	3.916E-04	853.	1.018E-03	9.886E-04	853.	3.178E-03	3.086E-03
SW	1024.	1024.	3.642E-04	3.538E-04	1024.	9.449E-04	9.177E-04	1024.	2.821E-03	2.739E-03
WSW	1170.	1170.	3.548E-04	3.447E-04	1170.	8.290E-04	8.051E-04	1170.	2.035E-03	1.976E-03
W	1756.	1756.	2.211E-04	2.148E-04	1756.	5.761E-04	5.595E-04	1756.	1.444E-03	1.402E-03
WNW	1219.	1219.	2.687E-04	2.610E-04	1219.	8.507E-04	8.261E-04	1219.	2.919E-03	2.834E-03
NW	756.	756.	4.925E-04	4.785E-04	756.	1.328E-03	1.289E-03	756.	3.891E-03	3.778E-03
NNW	671.	671.	6.252E-04	6.074E-04	671.	1.931E-03	1.875E-03	671.	5.808E-03	5.639E-03

DRESDEN SITE METEOROLOGICAL DATA 1/78 - 12/87

Table F-7 (Continued)

Maximum Offsite Finite Plume Gamma Dose Factors Based on 1 cm Depth at the Unrestricted Area Boundary for Kr-88

Downwind Direction	Unrestricted Area Bound (meters)	Elevated(Stack) Release Radius (meters)	S (mrad/yr)/(uCi/sec)	SBAR	Mixed Mode(Vent) Release Radius (meters)	V (mrad/yr)/(uCi/sec)	VBAR	Ground Level Release Radius (meters)	G (mrad/yr)/(uCi/sec)	GBAR
N	768.	768.	1.798E-03	1.750E-03	768.	5.062E-03	4.922E-03	768.	1.364E-02	1.325E-02
NNE	1207.	1207.	1.145E-03	1.115E-03	1207.	2.773E-03	2.696E-03	1207.	6.973E-03	6.774E-03
NE	1100.	1100.	1.134E-03	1.104E-03	1100.	2.790E-03	2.713E-03	1100.	7.521E-03	7.305E-03
ENE	1244.	1244.	9.211E-04	8.966E-04	1244.	1.790E-03	1.741E-03	1244.	3.954E-03	3.841E-03
E	1000.	1000.	1.337E-03	1.301E-03	1000.	3.603E-03	3.504E-03	1000.	8.777E-03	8.526E-03
ESE	988.	988.	1.221E-03	1.189E-03	988.	3.006E-03	2.923E-03	988.	8.327E-03	8.089E-03
SE	1000.	1000.	1.180E-03	1.149E-03	1000.	2.775E-03	2.699E-03	1000.	8.529E-03	8.284E-03
SSE	792.	792.	1.333E-03	1.297E-03	792.	3.341E-03	3.250E-03	792.	1.079E-02	1.048E-02
S	841.	841.	1.141E-03	1.110E-03	841.	2.653E-03	2.580E-03	841.	8.637E-03	8.389E-03
SSW	853.	853.	1.067E-03	1.038E-03	853.	2.528E-03	2.458E-03	853.	8.010E-03	7.780E-03
SW	1024.	1024.	9.589E-04	9.335E-04	1024.	2.381E-03	2.316E-03	1024.	7.206E-03	7.000E-03
WSW	1170.	1170.	9.327E-04	9.079E-04	1170.	2.083E-03	2.026E-03	1170.	5.217E-03	5.068E-03
W	1756.	1756.	5.907E-04	5.749E-04	1756.	1.464E-03	1.424E-03	1756.	3.745E-03	3.638E-03
WNW	1219.	1219.	7.062E-04	6.874E-04	1219.	2.122E-03	2.063E-03	1219.	7.530E-03	7.314E-03
NW	756.	756.	1.283E-03	1.249E-03	756.	3.288E-03	3.198E-03	756.	9.693E-03	9.414E-03
NNW	671.	671.	1.627E-03	1.584E-03	671.	4.738E-03	4.608E-03	671.	1.410E-02	1.369E-02

DRESDEN SITE METEOROLOGICAL DATA 1/78 - 12/87

Table F-7 (Continued)

Maximum Offsite Finite Plume Gamma Dose Factors Based on 1 cm Depth at the Unrestricted Area Boundary for Kr-89

Downwind Direction	Unrestricted Area Bound (meters)	Elevated(Stack) Release Radius (meters)	S (mrad/yr)/(uCi/sec)	SBAR	Mixed Mode(Vent) Release Radius (meters)	V (mrad/yr)/(uCi/sec)	VBAR	Ground Level Release Radius (meters)	G (mrad/yr)/(uCi/sec)	GBAR
N	768.	768.	8.646E-04	8.402E-04	768.	2.184E-03	2.122E-03	768.	3.839E-03	3.729E-03
NNE	1207.	1207.	4.473E-04	4.346E-04	1207.	7.989E-04	7.761E-04	1207.	1.144E-03	1.111E-03
NE	1100.	1100.	4.367E-04	4.243E-04	1100.	8.040E-04	7.811E-04	1100.	1.199E-03	1.165E-03
ENE	1244.	1244.	2.952E-04	2.869E-04	1244.	4.535E-04	4.405E-04	1244.	5.737E-04	5.573E-04
E	1000.	1000.	5.470E-04	5.316E-04	1000.	1.225E-03	1.190E-03	1000.	1.926E-03	1.871E-03
ESE	988.	988.	5.116E-04	4.972E-04	988.	1.030E-03	1.000E-03	988.	1.737E-03	1.687E-03
SE	1000.	1000.	4.765E-04	4.631E-04	1000.	9.283E-04	9.017E-04	1000.	1.559E-03	1.514E-03
SSE	792.	792.	6.139E-04	5.966E-04	792.	1.268E-03	1.231E-03	792.	2.376E-03	2.308E-03
S	841.	841.	4.316E-04	4.195E-04	841.	8.997E-04	8.740E-04	841.	1.470E-03	1.428E-03
SSW	853.	853.	4.106E-04	3.990E-04	853.	8.384E-04	8.145E-04	853.	1.447E-03	1.405E-03
SW	1024.	1024.	3.383E-04	3.288E-04	1024.	6.604E-04	6.415E-04	1024.	1.090E-03	1.059E-03
WSW	1170.	1170.	2.800E-04	2.721E-04	1170.	4.872E-04	4.732E-04	1170.	6.582E-04	6.393E-04
W	1756.	1756.	1.180E-04	1.147E-04	1756.	2.232E-04	2.168E-04	1756.	2.784E-04	2.704E-04
WNW	1219.	1219.	2.179E-04	2.118E-04	1219.	5.131E-04	4.984E-04	1219.	9.315E-04	9.048E-04
NW	756.	756.	5.630E-04	5.471E-04	756.	1.241E-03	1.206E-03	756.	2.287E-03	2.221E-03
NNW	671.	671.	7.830E-04	7.610E-04	671.	2.075E-03	2.016E-03	671.	4.479E-03	4.350E-03

DRESDEN SITE METEOROLOGICAL DATA 1/78 - 12/87

Table F-7 (Continued)

Maximum Offsite Finite Plume Gamma Dose Factors Based on 1 cm Depth at the Unrestricted Area Boundary for Kr-90

Downwind Direction	Unrestricted Area Bound (meters)	Elevated(Stack) Release Radius (meters)	S (mrad/yr)/(uCi/sec)	SBAR	Mixed Mode(Vent) Release Radius (meters)	V (mrad/yr)/(uCi/sec)	VBAR	Ground Level Release Radius (meters)	G (mrad/yr)/(uCi/sec)	GBAR
N	768.	768.	1.568E-04	1.522E-04	768.	2.579E-04	2.501E-04	768.	2.558E-04	2.480E-04
NNE	1207.	1207.	3.689E-05	3.581E-05	1207.	3.215E-05	3.118E-05	1207.	2.553E-05	2.476E-05
NE	1100.	1100.	3.809E-05	3.697E-05	1100.	3.434E-05	3.331E-05	1100.	2.511E-05	2.435E-05
ENE	1244.	1244.	1.660E-05	1.611E-05	1244.	1.571E-05	1.524E-05	1244.	1.176E-05	1.141E-05
E	1000.	1000.	5.925E-05	5.751E-05	1000.	7.864E-05	7.628E-05	1000.	6.596E-05	6.396E-05
ESE	988.	988.	5.808E-05	5.637E-05	988.	6.960E-05	6.751E-05	988.	6.042E-05	5.858E-05
SE	1000.	1000.	4.406E-05	4.276E-05	1000.	5.157E-05	5.003E-05	1000.	4.271E-05	4.142E-05
SSE	792.	792.	8.809E-05	8.550E-05	792.	1.063E-04	1.032E-04	792.	8.990E-05	8.717E-05
S	841.	841.	4.794E-05	4.653E-05	841.	5.718E-05	5.547E-05	841.	4.271E-05	4.142E-05
SSW	853.	853.	4.498E-05	4.366E-05	853.	5.154E-05	5.000E-05	853.	3.559E-05	3.451E-05
SW	1024.	1024.	2.322E-05	2.254E-05	1024.	2.362E-05	2.292E-05	1024.	1.401E-05	1.359E-05
WSW	1170.	1170.	1.048E-05	1.018E-05	1170.	8.515E-06	8.260E-06	1170.	4.127E-06	4.002E-06
W	1756.	1756.	1.866E-06	1.811E-06	1756.	1.530E-06	1.484E-06	1756.	7.900E-07	7.660E-07
WNW	1219.	1219.	1.141E-05	1.108E-05	1219.	1.162E-05	1.127E-05	1219.	7.712E-06	7.478E-06
NW	756.	756.	7.050E-05	6.843E-05	756.	9.619E-05	9.331E-05	756.	9.617E-05	9.325E-05
NNW	671.	671.	1.395E-04	1.354E-04	671.	2.516E-04	2.440E-04	671.	3.058E-04	2.965E-04

DRESDEN SITE METEOROLOGICAL DATA 1/78 - 12/87

Table F-7 (Continued)

Maximum Offsite Finite Plume Gamma Dose Factors Based on 1 cm Depth at the Unrestricted Area Boundary for Xe-131m

Downwind Direction	Unrestricted Area Bound (meters)	Elevated(Stack) Release Radius (meters)	S (mrad/yr)/(uCi/sec)	SBAR	Mixed Mode(Vent) Release Radius (meters)	V (mrad/yr)/(uCi/sec)	VBAR	Ground Level Release Radius (meters)	G (mrad/yr)/(uCi/sec)	GBAR
N	768.	768.	3.860E-06	3.549E-06	768.	5.875E-05	4.699E-05	768.	3.373E-04	2.627E-04
NNE	1207.	1207.	2.996E-06	2.686E-06	1207.	3.052E-05	2.450E-05	1207.	1.588E-04	1.241E-04
NE	1100.	1100.	2.780E-06	2.510E-06	1100.	3.055E-05	2.453E-05	1100.	1.832E-04	1.429E-04
ENE	1244.	1244.	2.389E-06	2.138E-06	1244.	1.775E-05	1.433E-05	1244.	9.009E-05	7.042E-05
E	1000.	1000.	3.301E-06	2.974E-06	1000.	4.098E-05	3.284E-05	1000.	2.011E-04	1.571E-04
ESE	988.	988.	3.141E-06	2.814E-06	988.	3.367E-05	2.700E-05	988.	1.935E-04	1.511E-04
SE	1000.	1000.	3.130E-06	2.790E-06	1000.	2.958E-05	2.377E-05	1000.	2.037E-04	1.589E-04
SSE	792.	792.	3.440E-06	3.070E-06	792.	3.584E-05	2.877E-05	792.	2.679E-04	2.087E-04
S	841.	841.	2.742E-06	2.468E-06	841.	2.515E-05	2.034E-05	841.	2.097E-04	1.636E-04
SSW	853.	853.	2.552E-06	2.299E-06	853.	2.495E-05	2.014E-05	853.	1.939E-04	1.512E-04
SW	1024.	1024.	2.264E-06	2.047E-06	1024.	2.129E-05	1.730E-05	1024.	1.655E-04	1.294E-04
WSW	1170.	1170.	2.221E-06	2.008E-06	1170.	1.748E-05	1.427E-05	1170.	1.168E-04	9.138E-05
W	1756.	1756.	1.707E-06	1.508E-06	1756.	1.464E-05	1.183E-05	1756.	7.787E-05	6.110E-05
WNW	1219.	1219.	1.748E-06	1.573E-06	1219.	2.310E-05	1.855E-05	1219.	1.829E-04	1.428E-04
NW	756.	756.	2.670E-06	2.458E-06	756.	3.276E-05	2.642E-05	756.	2.430E-04	1.892E-04
NNW	671.	671.	3.255E-06	3.020E-06	671.	5.352E-05	4.285E-05	671.	3.526E-04	2.744E-04

DRESDEN SITE METEOROLOGICAL DATA 1/78 - 12/87

Table F-7 (Continued)

Maximum Offsite Finite Plume Gamma Dose Factors Based on 1 cm Depth at the Unrestricted Area Boundary for Xe-133m

Downwind Direction	Unrestricted Area Bound (meters)	Elevated(Stack) Release Radius (meters)	S (mrad/yr)/(uCi/sec)	SBAR	Mixed Mode(Vent) Release Radius (meters)	V (mrad/yr)/(uCi/sec)	VBAR	Ground Level Release Radius (meters)	G (mrad/yr)/(uCi/sec)	GBAR
N	768.	768.	2.077E-05	1.991E-05	768.	1.316E-04	1.171E-04	768.	5.699E-04	4.854E-04
NNE	1207.	1207.	1.432E-05	1.364E-05	1207.	7.079E-05	6.329E-05	1207.	2.781E-04	2.384E-04
NE	1100.	1100.	1.375E-05	1.312E-05	1100.	7.088E-05	6.337E-05	1100.	3.146E-04	2.689E-04
ENE	1244.	1244.	1.132E-05	1.078E-05	1244.	4.336E-05	3.901E-05	1244.	1.587E-04	1.362E-04
E	1000.	1000.	1.617E-05	1.542E-05	1000.	9.343E-05	8.334E-05	1000.	3.512E-04	3.009E-04
ESE	988.	988.	1.497E-05	1.425E-05	988.	7.719E-05	6.890E-05	988.	3.362E-04	2.878E-04
SE	1000.	1000.	1.453E-05	1.382E-05	1000.	6.921E-05	6.194E-05	1000.	3.510E-04	3.001E-04
SSE	792.	792.	1.607E-05	1.529E-05	792.	8.308E-05	7.427E-05	792.	4.526E-04	3.856E-04
S	841.	841.	1.335E-05	1.273E-05	841.	6.223E-05	5.608E-05	841.	3.601E-04	3.077E-04
SSW	853.	853.	1.248E-05	1.190E-05	853.	6.060E-05	5.449E-05	853.	3.327E-04	2.842E-04
SW	1024.	1024.	1.128E-05	1.077E-05	1024.	5.478E-05	4.959E-05	1024.	2.917E-04	2.504E-04
WSW	1170.	1170.	1.106E-05	1.056E-05	1170.	4.676E-05	4.251E-05	1170.	2.081E-04	1.790E-04
W	1756.	1756.	7.554E-06	7.162E-06	1756.	3.599E-05	3.241E-05	1756.	1.432E-04	1.239E-04
WNW	1219.	1219.	8.502E-06	8.106E-06	1219.	5.377E-05	4.810E-05	1219.	3.164E-04	2.707E-04
NW	756.	756.	1.446E-05	1.386E-05	756.	7.908E-05	7.105E-05	756.	4.100E-04	3.491E-04
NNW	671.	671.	1.823E-05	1.751E-05	671.	1.211E-04	1.079E-04	671.	5.909E-04	5.025E-04

DRESDEN SITE METEOROLOGICAL DATA 1/78 - 12/87

Table F-7 (Continued)

Maximum Offsite Finite Plume Gamma Dose Factors Based on 1 cm Depth at the Unrestricted Area Boundary for Xe-133

Downwind Direction	Unrestricted Area Bound (meters)	Elevated(Stack) Release Radius (meters)	S (mrad/yr)/(uCi/sec)	SBAR	Mixed Mode(Vent) Release Radius (meters)	V (mrad/yr)/(uCi/sec)	VBAR	Ground Level Release Radius (meters)	G (mrad/yr)/(uCi/sec)	GBAR
N	768.	768.	1.874E-05	1.809E-05	768.	1.481E-04	1.356E-04	768.	6.304E-04	5.584E-04
NNE	1207.	1207.	1.362E-05	1.308E-05	1207.	7.994E-05	7.347E-05	1207.	3.114E-04	2.775E-04
NE	1100.	1100.	1.279E-05	1.230E-05	1100.	7.969E-05	7.322E-05	1100.	3.505E-04	3.114E-04
ENE	1244.	1244.	1.062E-05	1.019E-05	1244.	4.887E-05	4.512E-05	1244.	1.780E-04	1.588E-04
E	1000.	1000.	1.507E-05	1.448E-05	1000.	1.055E-04	9.682E-05	1000.	3.930E-04	3.500E-04
ESE	988.	988.	1.406E-05	1.350E-05	988.	8.706E-05	7.992E-05	988.	3.755E-04	3.341E-04
SE	1000.	1000.	1.367E-05	1.311E-05	1000.	7.806E-05	7.179E-05	1000.	3.909E-04	3.474E-04
SSE	792.	792.	1.491E-05	1.430E-05	792.	9.314E-05	8.555E-05	792.	5.002E-04	4.430E-04
S	841.	841.	1.201E-05	1.154E-05	841.	6.991E-05	6.460E-05	841.	4.011E-04	3.563E-04
SSW	853.	853.	1.126E-05	1.082E-05	853.	6.822E-05	6.295E-05	853.	3.704E-04	3.290E-04
SW	1024.	1024.	1.031E-05	9.919E-06	1024.	6.164E-05	5.715E-05	1024.	3.280E-04	2.926E-04
WSW	1170.	1170.	1.020E-05	9.811E-06	1170.	5.274E-05	4.906E-05	1170.	2.347E-04	2.097E-04
W	1756.	1756.	7.325E-06	7.009E-06	1756.	4.041E-05	3.732E-05	1756.	1.627E-04	1.460E-04
WNW	1219.	1219.	7.875E-06	7.566E-06	1219.	6.054E-05	5.564E-05	1219.	3.538E-04	3.147E-04
NW	756.	756.	1.282E-05	1.237E-05	756.	8.885E-05	8.193E-05	756.	4.536E-04	4.018E-04
NNW	671.	671.	1.609E-05	1.556E-05	671.	1.356E-04	1.242E-04	671.	6.514E-04	5.762E-04

DRESDEN SITE METEOROLOGICAL DATA 1/78 - 12/87

Table F-7 (Continued)

Maximum Offsite Finite Plume Gamma Dose Factors Based on 1 cm Depth at the Unrestricted Area Boundary for Xe-135m

Downwind Direction	Unrestricted Area Bound (meters)	Elevated(Stack) Release Radius (meters)	S (mrad/yr)/(uCi/sec)	SBAR	Mixed Mode(Vent) Release Radius (meters)	V (mrad/yr)/(uCi/sec)	VBAR	Ground Level Release Radius (meters)	G (mrad/yr)/(uCi/sec)	GBAR
N	768.	768.	3.231E-04	3.124E-04	768.	1.124E-03	1.085E-03	768.	2.824E-03	2.720E-03
NNE	1207.	1207.	2.031E-04	1.964E-04	1207.	5.521E-04	5.329E-04	1207.	1.269E-03	1.222E-03
NE	1100.	1100.	1.979E-04	1.914E-04	1100.	5.468E-04	5.279E-04	1100.	1.305E-03	1.257E-03
ENE	1244.	1244.	1.536E-04	1.485E-04	1244.	3.362E-04	3.247E-04	1244.	6.595E-04	6.355E-04
E	1000.	1000.	2.367E-04	2.288E-04	1000.	7.411E-04	7.153E-04	1000.	1.693E-03	1.631E-03
ESE	988.	988.	2.177E-04	2.105E-04	988.	6.173E-04	5.958E-04	988.	1.571E-03	1.514E-03
SE	1000.	1000.	2.084E-04	2.015E-04	1000.	5.726E-04	5.528E-04	1000.	1.533E-03	1.477E-03
SSE	792.	792.	2.399E-04	2.320E-04	792.	7.020E-04	6.777E-04	792.	2.066E-03	1.990E-03
S	841.	841.	1.838E-04	1.777E-04	841.	5.365E-04	5.180E-04	841.	1.480E-03	1.426E-03
SSW	853.	853.	1.761E-04	1.702E-04	853.	5.143E-04	4.966E-04	853.	1.442E-03	1.389E-03
SW	1024.	1024.	1.595E-04	1.542E-04	1024.	4.548E-04	4.392E-04	1024.	1.217E-03	1.173E-03
WSW	1170.	1170.	1.518E-04	1.468E-04	1170.	3.897E-04	3.764E-04	1170.	8.550E-04	8.240E-04
W	1756.	1756.	8.725E-05	8.434E-05	1756.	2.491E-04	2.405E-04	1756.	5.456E-04	5.260E-04
WNW	1219.	1219.	1.152E-04	1.114E-04	1219.	4.090E-04	3.949E-04	1219.	1.225E-03	1.180E-03
NW	756.	756.	2.251E-04	2.177E-04	756.	6.857E-04	6.621E-04	756.	1.873E-03	1.804E-03
NNW	671.	671.	2.899E-04	2.803E-04	671.	1.043E-03	1.007E-03	671.	3.115E-03	3.000E-03

DRESDEN SITE METEOROLOGICAL DATA 1/78 - 12/87

Table F-7 (Continued)

Maximum Offsite Finite Plume Gamma Dose Factors Based on 1 cm Depth at the Unrestricted Area Boundary for Xe-135

Downwind Direction	Unrestricted Area Bound (meters)	Elevated(Stack) Release Radius (meters)	S (mrad/yr)/(uCi/sec)	SBAR	Mixed Mode(Vent) Release Radius (meters)	V (mrad/yr)/(uCi/sec)	VBAR	Ground Level Release Radius (meters)	G (mrad/yr)/(uCi/sec)	GBAR
N	768.	768.	1.977E-04	1.913E-04	768.	8.258E-04	7.984E-04	768.	2.561E-03	2.473E-03
NNE	1207.	1207.	1.320E-04	1.277E-04	1207.	4.556E-04	4.406E-04	1207.	1.315E-03	1.270E-03
NE	1100.	1100.	1.279E-04	1.238E-04	1100.	4.558E-04	4.407E-04	1100.	1.440E-03	1.391E-03
ENE	1244.	1244.	1.040E-04	1.007E-04	1244.	2.898E-04	2.803E-04	1244.	7.532E-04	7.276E-04
E	1000.	1000.	1.502E-04	1.454E-04	1000.	5.929E-04	5.733E-04	1000.	1.654E-03	1.597E-03
ESE	988.	988.	1.380E-04	1.335E-04	988.	4.921E-04	4.758E-04	988.	1.571E-03	1.517E-03
SE	1000.	1000.	1.329E-04	1.287E-04	1000.	4.493E-04	4.344E-04	1000.	1.617E-03	1.562E-03
SSE	792.	792.	1.475E-04	1.427E-04	792.	5.356E-04	5.179E-04	792.	2.030E-03	1.960E-03
S	841.	841.	1.235E-04	1.195E-04	841.	4.212E-04	4.073E-04	841.	1.649E-03	1.593E-03
SSW	853.	853.	1.157E-04	1.120E-04	853.	4.047E-04	3.914E-04	853.	1.524E-03	1.472E-03
SW	1024.	1024.	1.052E-04	1.018E-04	1024.	3.800E-04	3.675E-04	1024.	1.384E-03	1.337E-03
WSW	1170.	1170.	1.031E-04	9.974E-05	1170.	3.328E-04	3.218E-04	1170.	1.002E-03	9.680E-04
W	1756.	1756.	6.772E-05	6.553E-05	1756.	2.411E-04	2.332E-04	1756.	7.180E-04	6.938E-04
WNW	1219.	1219.	7.868E-05	7.615E-05	1219.	3.470E-04	3.355E-04	1219.	1.459E-03	1.409E-03
NW	756.	756.	1.379E-04	1.335E-04	756.	5.259E-04	5.086E-04	756.	1.834E-03	1.771E-03
NNW	671.	671.	1.754E-04	1.697E-04	671.	7.662E-04	7.408E-04	671.	2.627E-03	2.537E-03

DRESDEN SITE METEOROLOGICAL DATA 1/78 - 12/87

Table F-7 (Continued)

Maximum Offsite Finite Plume Gamma Dose Factors Based on 1 cm Depth at the Unrestricted Area Boundary for Xe-137

Downwind Direction	Unrestricted Area Bound (meters)	Elevated(Stack) Release			Mixed Mode(Vent) Release			Ground Level Release		
		Radius (meters)	S (mrad/yr)/(uCi/sec)	SBAR	Radius (meters)	V (mrad/yr)/(uCi/sec)	VBAR	Radius (meters)	G (mrad/yr)/(uCi/sec)	GBAR
N	768.	768.	1.107E-04	1.071E-04	768.	3.275E-04	3.170E-04	768.	6.309E-04	6.104E-04
NNE	1207.	1207.	6.023E-05	5.830E-05	1207.	1.264E-04	1.223E-04	1207.	2.017E-04	1.952E-04
NE	1100.	1100.	5.847E-05	5.659E-05	1100.	1.267E-04	1.226E-04	1100.	2.117E-04	2.049E-04
ENE	1244.	1244.	4.063E-05	3.933E-05	1244.	7.244E-05	7.011E-05	1244.	1.013E-04	9.801E-05
E	1000.	1000.	7.256E-05	7.024E-05	1000.	1.894E-04	1.833E-04	1000.	3.270E-04	3.164E-04
ESE	988.	988.	6.769E-05	6.552E-05	988.	1.588E-04	1.537E-04	988.	2.954E-04	2.859E-04
SE	1000.	1000.	6.336E-05	6.133E-05	1000.	1.436E-04	1.389E-04	1000.	2.687E-04	2.600E-04
SSE	792.	792.	7.937E-05	7.683E-05	792.	1.916E-04	1.855E-04	792.	4.020E-04	3.890E-04
S	841.	841.	5.651E-05	5.470E-05	841.	1.378E-04	1.334E-04	841.	2.539E-04	2.457E-04
SSW	853.	853.	5.384E-05	5.212E-05	853.	1.293E-04	1.251E-04	853.	2.520E-04	2.438E-04
SW	1024.	1024.	4.546E-05	4.400E-05	1024.	1.042E-04	1.009E-04	1024.	1.939E-04	1.876E-04
WSW	1170.	1170.	3.874E-05	3.750E-05	1170.	7.913E-05	7.658E-05	1170.	1.209E-04	1.170E-04
W	1756.	1756.	1.752E-05	1.696E-05	1756.	3.873E-05	3.748E-05	1756.	5.480E-05	5.302E-05
WNW	1219.	1219.	2.999E-05	2.903E-05	1219.	8.360E-05	8.091E-05	1219.	1.722E-04	1.666E-04
NW	756.	756.	7.264E-05	7.031E-05	756.	1.876E-04	1.816E-04	756.	3.834E-04	3.710E-04
NNW	671.	671.	9.950E-05	9.632E-05	671.	3.095E-04	2.995E-04	671.	7.314E-04	7.077E-04

DRESDEN SITE METEOROLOGICAL DATA 1/78 - 12/87

Table F-7 (Continued)

Maximum Offsite Finite Plume Gamma Dose Factors Based on 1 cm Depth at the Unrestricted Area Boundary for Xe-138

Downwind Direction	Unrestricted Area Bound (meters)	Elevated(Stack) Release Radius (meters)	S (mrad/yr)/(uCi/sec)	SBAR	Mixed Mode(Vent) Release Radius (meters)	V (mrad/yr)/(uCi/sec)	VBAR	Ground Level Release Radius (meters)	G (mrad/yr)/(uCi/sec)	GBAR
N	768.	768.	8.543E-04	8.302E-04	768.	2.494E-03	2.422E-03	768.	5.853E-03	5.681E-03
NNE	1207.	1207.	5.254E-04	5.106E-04	1207.	1.219E-03	1.184E-03	1207.	2.614E-03	2.537E-03
NE	1100.	1100.	5.164E-04	5.019E-04	1100.	1.212E-03	1.177E-03	1100.	2.684E-03	2.605E-03
ENE	1244.	1244.	3.998E-04	3.885E-04	1244.	7.482E-04	7.267E-04	1244.	1.362E-03	1.322E-03
E	1000.	1000.	6.190E-04	6.015E-04	1000.	1.640E-03	1.593E-03	1000.	3.507E-03	3.404E-03
ESE	988.	988.	5.683E-04	5.523E-04	988.	1.367E-03	1.327E-03	988.	3.252E-03	3.156E-03
SE	1000.	1000.	5.447E-04	5.294E-04	1000.	1.273E-03	1.237E-03	1000.	3.167E-03	3.074E-03
SSE	792.	792.	6.340E-04	6.161E-04	792.	1.569E-03	1.524E-03	792.	4.277E-03	4.151E-03
S	841.	841.	4.874E-04	4.737E-04	841.	1.203E-03	1.168E-03	841.	3.049E-03	2.959E-03
SSW	853.	853.	4.667E-04	4.535E-04	853.	1.149E-03	1.116E-03	853.	2.974E-03	2.886E-03
SW	1024.	1024.	4.199E-04	4.081E-04	1024.	1.014E-03	9.852E-04	1024.	2.506E-03	2.432E-03
WSW	1170.	1170.	3.977E-04	3.865E-04	1170.	8.710E-04	8.460E-04	1170.	1.758E-03	1.706E-03
W	1756.	1756.	2.229E-04	2.166E-04	1756.	5.469E-04	5.312E-04	1756.	1.115E-03	1.082E-03
WNW	1219.	1219.	3.015E-04	2.930E-04	1219.	9.027E-04	8.767E-04	1219.	2.512E-03	2.438E-03
NW	756.	756.	6.013E-04	5.844E-04	756.	1.538E-03	1.494E-03	756.	3.871E-03	3.757E-03
NNW	671.	671.	7.735E-04	7.517E-04	671.	2.320E-03	2.253E-03	671.	6.461E-03	6.271E-03

DRESDEN SITE METEOROLOGICAL DATA 1/78 - 12/87

Table F-7 (Continued)

Maximum Offsite Finite Plume Gamma Dose Factors Based on 1 cm Depth at the Unrestricted Area Boundary for Ar-41

Downwind Direction	Unrestricted Area Bound (meters)	Elevated(Stack) Release Radius (meters)	S (mrad/yr)/(uCi/sec)	SBAR	Mixed Mode(Vent) Release Radius (meters)	V (mrad/yr)/(uCi/sec)	VBAR	Ground Level Release Radius (meters)	G (mrad/yr)/(uCi/sec)	GBAR
N	768.	768.	1.028E-03	9.954E-04	768.	3.199E-03	3.097E-03	768.	8.844E-03	8.561E-03
NNE	1207.	1207.	6.592E-04	6.381E-04	1207.	1.739E-03	1.683E-03	1207.	4.481E-03	4.337E-03
NE	1100.	1100.	6.501E-04	6.293E-04	1100.	1.740E-03	1.685E-03	1100.	4.797E-03	4.643E-03
ENE	1244.	1244.	5.257E-04	5.089E-04	1244.	1.111E-03	1.075E-03	1244.	2.509E-03	2.429E-03
E	1000.	1000.	7.666E-04	7.421E-04	1000.	2.262E-03	2.189E-03	1000.	5.647E-03	5.466E-03
ESE	988.	988.	7.013E-04	6.789E-04	988.	1.884E-03	1.824E-03	988.	5.348E-03	5.177E-03
SE	1000.	1000.	6.767E-04	6.550E-04	1000.	1.740E-03	1.684E-03	1000.	5.454E-03	5.280E-03
SSE	792.	792.	7.637E-04	7.393E-04	792.	2.092E-03	2.025E-03	792.	6.943E-03	6.721E-03
S	841.	841.	6.416E-04	6.210E-04	841.	1.652E-03	1.599E-03	841.	5.507E-03	5.331E-03
SSW	853.	853.	6.026E-04	5.833E-04	853.	1.580E-03	1.529E-03	853.	5.130E-03	4.966E-03
SW	1024.	1024.	5.432E-04	5.258E-04	1024.	1.475E-03	1.428E-03	1024.	4.583E-03	4.436E-03
WSW	1170.	1170.	5.286E-04	5.116E-04	1170.	1.293E-03	1.252E-03	1170.	3.310E-03	3.204E-03
W	1756.	1756.	3.346E-04	3.239E-04	1756.	9.098E-04	8.806E-04	1756.	2.358E-03	2.283E-03
WNW	1219.	1219.	4.009E-04	3.880E-04	1219.	1.327E-03	1.285E-03	1219.	4.769E-03	4.616E-03
NW	756.	756.	7.304E-04	7.070E-04	756.	2.057E-03	1.991E-03	756.	6.247E-03	6.047E-03
NNW	671.	671.	9.277E-04	8.980E-04	671.	2.986E-03	2.891E-03	671.	9.202E-03	8.907E-03

DRESDEN SITE METEOROLOGICAL DATA 1/78 - 12/87

Table F-7a

Maximum Offsite Finite Plume Gamma Dose Factors Based on 1 cm Depth at the Restricted Area Boundary for Kr-83m

Downwind Direction	Restricted Area Bound (meters)	Elevated(Stack) Release Radius (meters)	S (mrad/yr)/(uCi/sec)	SBAR	Mixed Mode(Vent) Release Radius (meters)	V (mrad/yr)/(uCi/sec)	VBAR	Ground Level Release Radius (meters)	G (mrad/yr)/(uCi/sec)	GBAR
N	466.	466.	1.041E-06	7.848E-07	466.	1.183E-04	8.920E-05	466.	7.750E-04	5.844E-04
NNE	698.	698.	1.121E-06	8.449E-07	698.	6.129E-05	4.621E-05	698.	3.913E-04	2.950E-04
NE	646.	646.	1.066E-06	8.037E-07	646.	6.013E-05	4.534E-05	646.	4.320E-04	3.257E-04
ENE	646.	646.	9.380E-07	7.072E-07	646.	3.998E-05	3.015E-05	646.	2.581E-04	1.946E-04
E	689.	689.	1.297E-06	9.782E-07	689.	6.576E-05	4.958E-05	689.	3.779E-04	2.849E-04
ESE	661.	661.	1.460E-06	1.101E-06	661.	5.746E-05	4.333E-05	661.	3.798E-04	2.864E-04
SE	664.	664.	1.647E-06	1.242E-06	664.	5.018E-05	3.784E-05	664.	3.997E-04	3.014E-04
SSE	744.	744.	1.560E-06	1.176E-06	744.	3.785E-05	2.854E-05	744.	3.091E-04	2.330E-04
S	814.	814.	1.112E-06	8.384E-07	814.	2.441E-05	1.841E-05	814.	2.240E-04	1.689E-04
SSW	789.	789.	1.040E-06	7.839E-07	789.	2.593E-05	1.955E-05	789.	2.244E-04	1.692E-04
SW	414.	414.	9.653E-07	7.278E-07	414.	6.443E-05	4.858E-05	414.	6.919E-04	5.217E-04
WSW	360.	360.	6.899E-07	5.202E-07	360.	6.746E-05	5.087E-05	360.	7.401E-04	5.581E-04
W	454.	454.	7.213E-07	5.439E-07	454.	7.089E-05	5.345E-05	454.	6.422E-04	4.842E-04
WNW	469.	469.	6.491E-07	4.894E-07	469.	8.073E-05	6.087E-05	469.	8.066E-04	6.082E-04
NW	482.	482.	7.323E-07	5.522E-07	482.	5.751E-05	4.336E-05	482.	5.123E-04	3.863E-04
NNW	466.	466.	7.395E-07	5.576E-07	466.	8.846E-05	6.670E-05	466.	6.690E-04	5.044E-04

DRESDEN SITE METEOROLOGICAL DATA 1/78 - 12/87

Note: Based on Reference 1 of Section F.2 and the formulas in Sections B.5 and B.6 of Appendix B.

Table F-7a (Continued)

Maximum Offsite Finite Plume Gamma Dose Factors Based on 1 cm Depth at the Restricted Area Boundary for Kr-85m

Downwind Direction	Restricted Area Bound (meters)	Elevated(Stack) Release Radius (meters)	S (mrad/yr)/(uCi/sec)	SBAR	Mixed Mode(Vent) Release Radius (meters)	V (mrad/yr)/(uCi/sec)	VBAR	Ground Level Release Radius (meters)	G (mrad/yr)/(uCi/sec)	GBAR
N	466.	466.	2.230E-04	2.158E-04	466.	1.067E-03	1.027E-03	466.	3.594E-03	3.437E-03
NNE	698.	698.	1.529E-04	1.479E-04	698.	6.163E-04	5.932E-04	698.	1.974E-03	1.889E-03
NE	646.	646.	1.478E-04	1.430E-04	646.	6.061E-04	5.834E-04	646.	2.111E-03	2.020E-03
ENE	646.	646.	1.333E-04	1.290E-04	646.	4.501E-04	4.335E-04	646.	1.321E-03	1.264E-03
E	689.	689.	1.498E-04	1.449E-04	689.	6.595E-04	6.348E-04	689.	1.981E-03	1.896E-03
ESE	661.	661.	1.424E-04	1.378E-04	661.	5.726E-04	5.511E-04	661.	1.959E-03	1.875E-03
SE	664.	664.	1.391E-04	1.346E-04	664.	5.279E-04	5.083E-04	664.	2.037E-03	1.950E-03
SSE	744.	744.	1.110E-04	1.074E-04	744.	4.191E-04	4.036E-04	744.	1.626E-03	1.556E-03
S	814.	814.	8.973E-05	8.679E-05	814.	3.161E-04	3.046E-04	814.	1.260E-03	1.207E-03
SSW	789.	789.	8.795E-05	8.508E-05	789.	3.199E-04	3.082E-04	789.	1.239E-03	1.187E-03
SW	414.	414.	1.735E-04	1.679E-04	414.	7.369E-04	7.098E-04	414.	3.258E-03	3.115E-03
WSW	360.	360.	2.168E-04	2.098E-04	360.	8.360E-04	8.055E-04	360.	3.347E-03	3.199E-03
W	454.	454.	1.616E-04	1.564E-04	454.	7.474E-04	7.196E-04	454.	3.018E-03	2.886E-03
WNW	469.	469.	1.329E-04	1.286E-04	469.	7.339E-04	7.061E-04	469.	3.639E-03	3.477E-03
NW	482.	482.	1.485E-04	1.437E-04	482.	6.336E-04	6.101E-04	482.	2.416E-03	2.311E-03
NNW	466.	466.	1.744E-04	1.688E-04	466.	8.433E-04	8.115E-04	466.	3.104E-03	2.968E-03

DRESDEN SITE METEOROLOGICAL DATA 1/78 - 12/87

Table F-7a (Continued)

Maximum Offsite Finite Plume Gamma Dose Factors Based on 1 cm Depth at the Restricted Area Boundary for Kr-85

Downwind Direction	Restricted Area Bound (meters)	Elevated(Stack) Release Radius (meters)	S (mrad/yr)/(uCi/sec)	SBAR	Mixed Mode(Vent) Release Radius (meters)	V (mrad/yr)/(uCi/sec)	VBAR	Ground Level Release Radius (meters)	G (mrad/yr)/(uCi/sec)	GBAR
N	466.	466.	3.143E-06	3.040E-06	466.	1.231E-05	1.190E-05	466.	3.902E-05	3.773E-05
NNE	698.	698.	2.122E-06	2.052E-06	698.	7.164E-06	6.928E-06	698.	2.157E-05	2.086E-05
NE	646.	646.	2.066E-06	1.998E-06	646.	7.095E-06	6.861E-06	646.	2.323E-05	2.247E-05
ENE	646.	646.	1.876E-06	1.814E-06	646.	5.302E-06	5.127E-06	646.	1.455E-05	1.407E-05
E	689.	689.	2.087E-06	2.018E-06	689.	7.673E-06	7.420E-06	689.	2.175E-05	2.103E-05
ESE	661.	661.	1.977E-06	1.912E-06	661.	6.666E-06	6.446E-06	661.	2.151E-05	2.080E-05
SE	664.	664.	1.932E-06	1.868E-06	664.	6.158E-06	5.955E-06	664.	2.246E-05	2.172E-05
SSE	744.	744.	1.539E-06	1.488E-06	744.	4.926E-06	4.763E-06	744.	1.802E-05	1.742E-05
S	814.	814.	1.279E-06	1.237E-06	814.	3.759E-06	3.635E-06	814.	1.416E-05	1.369E-05
SSW	789.	789.	1.247E-06	1.206E-06	789.	3.782E-06	3.657E-06	789.	1.382E-05	1.336E-05
SW	414.	414.	2.479E-06	2.397E-06	414.	8.698E-06	8.411E-06	414.	3.548E-05	3.430E-05
WSW	360.	360.	3.110E-06	3.008E-06	360.	9.874E-06	9.548E-06	360.	3.626E-05	3.506E-05
W	454.	454.	2.321E-06	2.244E-06	454.	8.737E-06	8.449E-06	454.	3.270E-05	3.163E-05
WNW	469.	469.	1.894E-06	1.832E-06	469.	8.519E-06	8.238E-06	469.	3.970E-05	3.839E-05
NW	482.	482.	2.110E-06	2.041E-06	482.	7.448E-06	7.202E-06	482.	2.638E-05	2.551E-05
NNW	466.	466.	2.476E-06	2.394E-06	466.	9.798E-06	9.474E-06	466.	3.357E-05	3.246E-05

DRESDEN SITE METEOROLOGICAL DATA 1/78 - 12/87

Table F-7a (Continued)

Maximum Offsite Finite Plume Gamma Dose Factors Based on 1 cm Depth at the Restricted Area Boundary for Kr-87

Downwind Direction	Restricted Area Bound (meters)	Elevated(Stack) Release Radius (meters)	S (mrad/yr)/(uCi/sec)	SBAR (mrad/yr)/(uCi/sec)	Mixed Mode(Vent) Release Radius (meters)	V (mrad/yr)/(uCi/sec)	VBAR (mrad/yr)/(uCi/sec)	Ground Level Release Radius (meters)	G (mrad/yr)/(uCi/sec)	GBAR (mrad/yr)/(uCi/sec)
N	466.	466.	1.137E-03	1.105E-03	466.	3.687E-03	3.580E-03	466.	1.071E-02	1.040E-02
NNE	698.	698.	7.555E-04	7.340E-04	698.	2.123E-03	2.062E-03	698.	5.856E-03	5.686E-03
NE	646.	646.	7.405E-04	7.194E-04	646.	2.093E-03	2.033E-03	646.	6.143E-03	5.965E-03
ENE	646.	646.	6.748E-04	6.556E-04	646.	1.576E-03	1.530E-03	646.	3.888E-03	3.775E-03
E	689.	689.	7.454E-04	7.242E-04	689.	2.252E-03	2.187E-03	689.	5.844E-03	5.674E-03
ESE	661.	661.	7.052E-04	6.852E-04	661.	1.965E-03	1.908E-03	661.	5.772E-03	5.604E-03
SE	664.	664.	6.896E-04	6.700E-04	664.	1.837E-03	1.784E-03	664.	5.961E-03	5.788E-03
SSE	744.	744.	5.478E-04	5.322E-04	744.	1.458E-03	1.416E-03	744.	4.719E-03	4.582E-03
S	814.	814.	4.428E-04	4.302E-04	814.	1.107E-03	1.075E-03	814.	3.558E-03	3.454E-03
SSW	789.	789.	4.371E-04	4.247E-04	789.	1.115E-03	1.082E-03	789.	3.542E-03	3.439E-03
SW	414.	414.	9.088E-04	8.830E-04	414.	2.627E-03	2.551E-03	414.	9.591E-03	9.312E-03
WSW	360.	360.	1.151E-03	1.119E-03	360.	3.009E-03	2.922E-03	360.	9.936E-03	9.647E-03
W	454.	454.	8.516E-04	8.275E-04	454.	2.633E-03	2.557E-03	454.	8.998E-03	8.737E-03
WNW	469.	469.	6.945E-04	6.748E-04	469.	2.555E-03	2.481E-03	469.	1.066E-02	1.035E-02
NW	482.	482.	7.712E-04	7.493E-04	482.	2.229E-03	2.164E-03	482.	7.109E-03	6.902E-03
NNW	466.	466.	8.990E-04	8.735E-04	466.	2.932E-03	2.847E-03	466.	9.310E-03	9.039E-03

DRESDEN SITE METEOROLOGICAL DATA 1/78 - 12/87

Table F-7a (Continued)

Maximum Offsite Finite Plume Gamma Dose Factors Based on 1 cm Depth at the Restricted Area Boundary for Kr-88

Downwind Direction	Restricted Area Bound (meters)	Elevated(Stack) Release Radius (meters)	S (mrad/yr)/(uCi/sec)	SBAR	Mixed Mode(Vent) Release Radius (meters)	V (mrad/yr)/(uCi/sec)	VBAR	Ground Level Release Radius (meters)	G (mrad/yr)/(uCi/sec)	GBAR
N	466.	466.	2.943E-03	2.865E-03	466.	8.929E-03	8.681E-03	466.	2.587E-02	2.511E-02
NNE	698.	698.	1.947E-03	1.896E-03	698.	5.194E-03	5.050E-03	698.	1.425E-02	1.384E-02
NE	646.	646.	1.914E-03	1.864E-03	646.	5.149E-03	5.007E-03	646.	1.515E-02	1.471E-02
ENE	646.	646.	1.751E-03	1.705E-03	646.	3.883E-03	3.776E-03	646.	9.563E-03	9.287E-03
E	689.	689.	1.928E-03	1.877E-03	689.	5.527E-03	5.374E-03	689.	1.430E-02	1.389E-02
ESE	661.	661.	1.821E-03	1.772E-03	661.	4.821E-03	4.688E-03	661.	1.414E-02	1.373E-02
SE	664.	664.	1.783E-03	1.735E-03	664.	4.497E-03	4.373E-03	664.	1.470E-02	1.427E-02
SSE	744.	744.	1.419E-03	1.382E-03	744.	3.601E-03	3.502E-03	744.	1.172E-02	1.138E-02
S	814.	814.	1.180E-03	1.148E-03	814.	2.755E-03	2.679E-03	814.	9.025E-03	8.765E-03
SSW	789.	789.	1.155E-03	1.124E-03	789.	2.761E-03	2.685E-03	789.	8.882E-03	8.627E-03
SW	414.	414.	2.367E-03	2.304E-03	414.	6.449E-03	6.272E-03	414.	2.333E-02	2.265E-02
WSW	360.	360.	2.990E-03	2.911E-03	360.	7.340E-03	7.139E-03	360.	2.399E-02	2.329E-02
W	454.	454.	2.223E-03	2.164E-03	454.	6.415E-03	6.238E-03	454.	2.169E-02	2.106E-02
WNW	469.	469.	1.805E-03	1.757E-03	469.	6.215E-03	6.043E-03	469.	2.604E-02	2.528E-02
NW	482.	482.	2.001E-03	1.948E-03	482.	5.457E-03	5.307E-03	482.	1.734E-02	1.684E-02
NNW	466.	466.	2.333E-03	2.271E-03	466.	7.138E-03	6.941E-03	466.	2.236E-02	2.171E-02

DRESDEN SITE METEOROLOGICAL DATA 1/78 - 12/87

Table F-7a (Continued)

Maximum Offsite Finite Plume Gamma Dose Factors Based on 1 cm Depth at the Restricted Area Boundary for Kr-89

Downwind Direction	Restricted Area Bound (meters)	Elevated(Stack) Release Radius (meters)	S (mrad/yr)/(uCi/sec)	SBAR	Mixed Mode(Vent) Release Radius (meters)	V (mrad/yr)/(uCi/sec)	VBAR	Ground Level Release Radius (meters)	G (mrad/yr)/(uCi/sec)	GBAR
N	466.	466.	1.732E-03	1.683E-03	466.	5.035E-03	4.891E-03	466.	1.065E-02	1.034E-02
NNE	698.	698.	1.031E-03	1.002E-03	698.	2.286E-03	2.221E-03	698.	4.275E-03	4.153E-03
NE	646.	646.	9.950E-04	9.670E-04	646.	2.234E-03	2.170E-03	646.	4.298E-03	4.175E-03
ENE	646.	646.	8.600E-04	8.358E-04	646.	1.676E-03	1.628E-03	646.	2.825E-03	2.744E-03
E	689.	689.	9.705E-04	9.431E-04	689.	2.440E-03	2.370E-03	689.	4.482E-03	4.354E-03
ESE	661.	661.	9.455E-04	9.188E-04	661.	2.181E-03	2.119E-03	661.	4.358E-03	4.232E-03
SE	664.	664.	9.066E-04	8.810E-04	664.	2.023E-03	1.966E-03	664.	4.112E-03	3.994E-03
SSE	744.	744.	6.762E-04	6.571E-04	744.	1.429E-03	1.388E-03	744.	2.760E-03	2.680E-03
S	814.	814.	4.553E-04	4.425E-04	814.	9.592E-04	9.318E-04	814.	1.596E-03	1.550E-03
SSW	789.	789.	4.664E-04	4.533E-04	789.	9.763E-04	9.484E-04	789.	1.761E-03	1.710E-03
SW	414.	414.	1.343E-03	1.305E-03	414.	3.343E-03	3.248E-03	414.	8.556E-03	8.310E-03
WSW	360.	360.	1.768E-03	1.718E-03	360.	4.104E-03	3.987E-03	360.	9.909E-03	9.624E-03
W	454.	454.	1.187E-03	1.153E-03	454.	3.343E-03	3.247E-03	454.	8.490E-03	8.246E-03
WNW	469.	469.	9.873E-04	9.595E-04	469.	3.183E-03	3.092E-03	469.	9.119E-03	8.857E-03
NW	482.	482.	1.096E-03	1.065E-03	482.	2.722E-03	2.644E-03	482.	6.040E-03	5.867E-03
NNW	466.	466.	1.313E-03	1.276E-03	466.	3.815E-03	3.706E-03	466.	9.388E-03	9.118E-03

DRESDEN SITE METEOROLOGICAL DATA 1/78 - 12/87

Table F-7a (Continued)

Maximum Offsite Finite Plume Gamma Dose Factors Based on 1 cm Depth at the Restricted Area Boundary for Kr-90

Downwind Direction	Restricted Area Bound (meters)	Elevated(Stack) Release Radius (meters)	S (mrad/yr)/(uCi/sec)	SBAR	Mixed Mode(Vent) Release Radius (meters)	V (mrad/yr)/(uCi/sec)	VBAR	Ground Level Release Radius (meters)	G (mrad/yr)/(uCi/sec)	GBAR
N	466.	466.	5.929E-04	5.755E-04	466.	1.271E-03	1.233E-03	466.	1.613E-03	1.564E-03
NNE	698.	698.	2.234E-04	2.169E-04	698.	2.964E-04	2.875E-04	698.	3.053E-04	2.960E-04
NE	646.	646.	2.150E-04	2.087E-04	646.	2.886E-04	2.799E-04	646.	2.853E-04	2.766E-04
ENE	646.	646.	1.600E-04	1.553E-04	646.	2.232E-04	2.165E-04	646.	2.234E-04	2.166E-04
E	689.	689.	1.909E-04	1.853E-04	689.	3.262E-04	3.164E-04	689.	3.357E-04	3.255E-04
ESE	661.	661.	2.049E-04	1.989E-04	661.	3.190E-04	3.094E-04	661.	3.449E-04	3.344E-04
SE	664.	664.	1.732E-04	1.681E-04	664.	2.602E-04	2.524E-04	664.	2.762E-04	2.678E-04
SSE	744.	744.	1.077E-04	1.046E-04	744.	1.358E-04	1.317E-04	744.	1.195E-04	1.159E-04
S	814.	814.	5.360E-05	5.202E-05	814.	6.541E-05	6.345E-05	814.	4.998E-05	4.846E-05
SSW	789.	789.	5.864E-05	5.692E-05	789.	7.078E-05	6.866E-05	789.	5.185E-05	5.027E-05
SW	414.	414.	4.047E-04	3.929E-04	414.	7.044E-04	6.833E-04	414.	9.383E-04	9.096E-04
WSW	360.	360.	5.613E-04	5.449E-04	360.	9.253E-04	8.977E-04	360.	1.276E-03	1.237E-03
W	454.	454.	3.031E-04	2.943E-04	454.	6.126E-04	5.942E-04	454.	8.379E-04	8.123E-04
WNW	469.	469.	2.652E-04	2.574E-04	469.	5.427E-04	5.264E-04	469.	7.684E-04	7.449E-04
NW	482.	482.	2.739E-04	2.659E-04	482.	4.758E-04	4.616E-04	482.	6.150E-04	5.962E-04
NNW	466.	466.	3.808E-04	3.696E-04	466.	8.240E-04	7.992E-04	466.	1.215E-03	1.178E-03

DRESDEN SITE METEOROLOGICAL DATA 1/78 - 12/87

Table F-7a (Continued)

Maximum Offsite Finite Plume Gamma Dose Factors Based on 1 cm Depth at the Restricted Area Boundary for Xe-131m

Downwind Direction	Restricted Area Bound (meters)	Elevated(Stack) Release Radius (meters)	S (mrad/yr)/(uCi/sec)	SBAR (mrad/yr)/(uCi/sec)	Mixed Mode(Vent) Release Radius (meters)	V (mrad/yr)/(uCi/sec)	VBAR (mrad/yr)/(uCi/sec)	Ground Level Release Radius (meters)	G (mrad/yr)/(uCi/sec)	GBAR (mrad/yr)/(uCi/sec)
N	466.	466.	5.556E-06	5.204E-06	466.	1.153E-04	9.164E-05	466.	6.984E-04	5.422E-04
NNE	698.	698.	4.133E-06	3.812E-06	698.	6.169E-05	4.926E-05	698.	3.589E-04	2.792E-04
NE	646.	646.	3.982E-06	3.675E-06	646.	6.105E-05	4.875E-05	646.	4.019E-04	3.123E-04
ENE	646.	646.	3.576E-06	3.303E-06	646.	4.173E-05	3.348E-05	646.	2.409E-04	1.874E-04
E	689.	689.	4.208E-06	3.855E-06	689.	6.680E-05	5.332E-05	689.	3.507E-04	2.731E-04
ESE	661.	661.	4.174E-06	3.795E-06	661.	5.779E-05	4.614E-05	661.	3.524E-04	2.743E-04
SE	664.	664.	4.252E-06	3.839E-06	664.	5.086E-05	4.070E-05	664.	3.743E-04	2.912E-04
SSE	744.	744.	3.590E-06	3.212E-06	744.	3.899E-05	3.128E-05	744.	2.939E-04	2.288E-04
S	814.	814.	2.813E-06	2.534E-06	814.	2.622E-05	2.120E-05	814.	2.202E-04	1.717E-04
SSW	789.	789.	2.708E-06	2.445E-06	789.	2.755E-05	2.221E-05	789.	2.178E-04	1.698E-04
SW	414.	414.	4.445E-06	4.141E-06	414.	6.611E-05	5.314E-05	414.	6.302E-04	4.894E-04
WSW	360.	360.	5.145E-06	4.865E-06	360.	7.064E-05	5.700E-05	360.	6.654E-04	5.162E-04
W	454.	454.	4.007E-06	3.758E-06	454.	7.148E-05	5.722E-05	454.	5.783E-04	4.492E-04
WNW	469.	469.	3.335E-06	3.119E-06	469.	7.894E-05	6.278E-05	469.	7.362E-04	5.710E-04
NW	482.	482.	3.732E-06	3.489E-06	482.	5.931E-05	4.756E-05	482.	4.685E-04	3.638E-04
NNW	466.	466.	4.291E-06	4.030E-06	466.	8.721E-05	6.951E-05	466.	5.987E-04	4.649E-04

DRESDEN SITE METEOROLOGICAL DATA 1/78 - 12/87

Table F-7a (Continued)

Maximum Offsite Finite Plume Gamma Dose Factors Based on 1 cm Depth at the Restricted Area Boundary for Xe-133m

Downwind Direction	Restricted Area Bound (meters)	Elevated(Stack) Release Radius (meters)	S (mrad/yr)/(uCi/sec)	SBAR	Mixed Mode(Vent) Release Radius (meters)	V (mrad/yr)/(uCi/sec)	VBAR	Ground Level Release Radius (meters)	G (mrad/yr)/(uCi/sec)	GBAR
N	466.	466.	3.241E-05	3.119E-05	466.	2.440E-04	2.155E-04	466.	1.136E-03	9.602E-04
NNE	698.	698.	2.256E-05	2.164E-05	698.	1.363E-04	1.211E-04	698.	5.998E-04	5.098E-04
NE	646.	646.	2.179E-05	2.091E-05	646.	1.346E-04	1.195E-04	646.	6.612E-04	5.604E-04
ENE	646.	646.	1.965E-05	1.886E-05	646.	9.633E-05	8.606E-05	646.	4.028E-04	3.424E-04
E	689.	689.	2.227E-05	2.133E-05	689.	1.468E-04	1.304E-04	689.	5.931E-04	5.052E-04
ESE	661.	661.	2.134E-05	2.040E-05	661.	1.272E-04	1.130E-04	661.	5.922E-04	5.039E-04
SE	664.	664.	2.103E-05	2.006E-05	664.	1.147E-04	1.022E-04	664.	6.244E-04	5.306E-04
SSE	744.	744.	1.699E-05	1.617E-05	744.	8.986E-05	8.027E-05	744.	4.942E-04	4.206E-04
S	814.	814.	1.376E-05	1.312E-05	814.	6.470E-05	5.828E-05	814.	3.771E-04	3.221E-04
SSW	789.	789.	1.340E-05	1.278E-05	789.	6.644E-05	5.969E-05	789.	3.712E-04	3.167E-04
SW	414.	414.	2.535E-05	2.437E-05	414.	1.552E-04	1.389E-04	414.	1.028E-03	8.695E-04
WSW	360.	360.	3.122E-05	3.010E-05	360.	1.715E-04	1.542E-04	360.	1.072E-03	9.053E-04
W	454.	454.	2.349E-05	2.262E-05	454.	1.617E-04	1.441E-04	454.	9.451E-04	7.998E-04
WNW	469.	469.	1.934E-05	1.860E-05	469.	1.676E-04	1.480E-04	469.	1.181E-03	9.961E-04
NW	482.	482.	2.161E-05	2.079E-05	482.	1.360E-04	1.214E-04	482.	7.638E-04	6.462E-04
NNW	466.	466.	2.531E-05	2.437E-05	466.	1.891E-04	1.675E-04	466.	9.753E-04	8.249E-04

DRESDEN SITE METEOROLOGICAL DATA 1/78 - 12/87

Table F-7a (Continued)

Maximum Offsite Finite Plume Gamma Dose Factors Based on 1 cm Depth at the Restricted Area Boundary for Xe-133

Downwind Direction	Restricted Area Bound (meters)	Elevated(Stack) Release Radius (meters)	S (mrad/yr)/(uCi/sec)	SBAR	Mixed Mode(Vent) Release Radius (meters)	V (mrad/yr)/(uCi/sec)	VBAR	Ground Level Release Radius (meters)	G (mrad/yr)/(uCi/sec)	GBAR
N	466.	466.	2.838E-05	2.749E-05	466.	2.710E-04	2.466E-04	466.	1.235E-03	1.086E-03
NNE	698.	698.	2.043E-05	1.974E-05	698.	1.526E-04	1.395E-04	698.	6.600E-04	5.834E-04
NE	646.	646.	1.949E-05	1.883E-05	646.	1.497E-04	1.367E-04	646.	7.232E-04	6.376E-04
ENE	646.	646.	1.742E-05	1.683E-05	646.	1.075E-04	9.865E-05	646.	4.427E-04	3.913E-04
E	689.	689.	2.012E-05	1.941E-05	689.	1.647E-04	1.505E-04	689.	6.559E-04	5.810E-04
ESE	661.	661.	1.945E-05	1.873E-05	661.	1.424E-04	1.302E-04	661.	6.530E-04	5.778E-04
SE	664.	664.	1.923E-05	1.848E-05	664.	1.285E-04	1.178E-04	664.	6.863E-04	6.064E-04
SSE	744.	744.	1.569E-05	1.505E-05	744.	1.006E-04	9.237E-05	744.	5.450E-04	4.823E-04
S	814.	814.	1.234E-05	1.186E-05	814.	7.264E-05	6.710E-05	814.	4.196E-04	3.726E-04
SSW	789.	789.	1.201E-05	1.154E-05	789.	7.469E-05	6.887E-05	789.	4.123E-04	3.658E-04
SW	414.	414.	2.175E-05	2.105E-05	414.	1.717E-04	1.578E-04	414.	1.121E-03	9.870E-04
WSW	360.	360.	2.634E-05	2.555E-05	360.	1.899E-04	1.750E-04	360.	1.163E-03	1.021E-03
W	454.	454.	1.994E-05	1.931E-05	454.	1.796E-04	1.645E-04	454.	1.031E-03	9.079E-04
WNW	469.	469.	1.660E-05	1.607E-05	469.	1.849E-04	1.682E-04	469.	1.278E-03	1.121E-03
NW	482.	482.	1.863E-05	1.804E-05	482.	1.512E-04	1.386E-04	482.	8.321E-04	7.323E-04
NNW	466.	466.	2.185E-05	2.118E-05	466.	2.096E-04	1.912E-04	466.	1.062E-03	9.343E-04

DRESDEN SITE METEOROLOGICAL DATA 1/78 - 12/87

Table F-7a (Continued)

Maximum Offsite Finite Plume Gamma Dose Factors Based on 1 cm Depth at the Restricted Area Boundary for Xe-135m

Downwind Direction	Restricted Area Bound (meters)	Elevated(Stack) Release			Mixed Mode(Vent) Release			Ground Level Release		
		Radius (meters)	S (mrad/yr)/(uCi/sec)	SBAR	Radius (meters)	V (mrad/yr)/(uCi/sec)	VBAR	Radius (meters)	G (mrad/yr)/(uCi/sec)	GBAR
N	466.	466.	5.476E-04	5.295E-04	466.	2.124E-03	2.049E-03	466.	5.997E-03	5.773E-03
NNE	698.	698.	3.634E-04	3.514E-04	698.	1.154E-03	1.114E-03	698.	3.094E-03	2.980E-03
NE	646.	646.	3.525E-04	3.408E-04	646.	1.121E-03	1.082E-03	646.	3.110E-03	2.995E-03
ENE	646.	646.	3.159E-04	3.054E-04	646.	8.372E-04	8.082E-04	646.	1.987E-03	1.914E-03
E	689.	689.	3.536E-04	3.419E-04	689.	1.215E-03	1.173E-03	689.	3.060E-03	2.947E-03
ESE	661.	661.	3.372E-04	3.260E-04	661.	1.065E-03	1.028E-03	661.	2.999E-03	2.888E-03
SE	664.	664.	3.282E-04	3.173E-04	664.	1.001E-03	9.660E-04	664.	3.007E-03	2.896E-03
SSE	744.	744.	2.572E-04	2.486E-04	744.	7.657E-04	7.391E-04	744.	2.290E-03	2.206E-03
S	814.	814.	1.908E-04	1.844E-04	814.	5.608E-04	5.414E-04	814.	1.566E-03	1.509E-03
SSW	789.	789.	1.925E-04	1.861E-04	789.	5.709E-04	5.512E-04	789.	1.643E-03	1.583E-03
SW	414.	414.	4.279E-04	4.137E-04	414.	1.445E-03	1.395E-03	414.	5.165E-03	4.973E-03
WSW	360.	360.	5.484E-04	5.302E-04	360.	1.692E-03	1.634E-03	360.	5.561E-03	5.353E-03
W	454.	454.	3.953E-04	3.822E-04	454.	1.478E-03	1.426E-03	454.	5.053E-03	4.865E-03
WNW	469.	469.	3.274E-04	3.166E-04	469.	1.441E-03	1.390E-03	469.	5.671E-03	5.459E-03
NW	482.	482.	3.651E-04	3.530E-04	482.	1.223E-03	1.180E-03	482.	3.781E-03	3.640E-03
NNW	466.	466.	4.270E-04	4.129E-04	466.	1.655E-03	1.597E-03	466.	5.333E-03	5.134E-03

DRESDEN SITE METEOROLOGICAL DATA 1/78 - 12/87

Table F-7a (Continued)

Maximum Offsite Finite Plume Gamma Dose Factors Based on 1 cm Depth at the Restricted Area Boundary for Xe-135

Downwind Direction	Restricted Area Bound (meters)	Elevated(Stack) Release Radius (meters)	S (mrad/yr)/(uCi/sec)	SBAR	Mixed Mode(Vent) Release Radius (meters)	V (mrad/yr)/(uCi/sec)	VBAR	Ground Level Release Radius (meters)	G (mrad/yr)/(uCi/sec)	GBAR
N	466.	466.	3.150E-04	3.049E-04	466.	1.457E-03	1.408E-03	466.	4.806E-03	4.640E-03
NNE	698.	698.	2.157E-04	2.087E-04	698.	8.450E-04	8.169E-04	698.	2.654E-03	2.563E-03
NE	646.	646.	2.086E-04	2.019E-04	646.	8.323E-04	8.046E-04	646.	2.845E-03	2.747E-03
ENE	646.	646.	1.883E-04	1.822E-04	646.	6.195E-04	5.990E-04	646.	1.781E-03	1.720E-03
E	689.	689.	2.114E-04	2.046E-04	689.	9.053E-04	8.752E-04	689.	2.671E-03	2.580E-03
ESE	661.	661.	2.008E-04	1.943E-04	661.	7.856E-04	7.595E-04	661.	2.641E-03	2.550E-03
SE	664.	664.	1.961E-04	1.898E-04	664.	7.244E-04	7.004E-04	664.	2.749E-03	2.655E-03
SSE	744.	744.	1.565E-04	1.515E-04	744.	5.768E-04	5.577E-04	744.	2.201E-03	2.126E-03
S	814.	814.	1.274E-04	1.233E-04	814.	4.371E-04	4.227E-04	814.	1.721E-03	1.662E-03
SSW	789.	789.	1.246E-04	1.206E-04	789.	4.416E-04	4.270E-04	789.	1.685E-03	1.628E-03
SW	414.	414.	2.453E-04	2.375E-04	414.	1.013E-03	9.796E-04	414.	4.367E-03	4.216E-03
WSW	360.	360.	3.066E-04	2.967E-04	360.	1.150E-03	1.112E-03	360.	4.470E-03	4.315E-03
W	454.	454.	2.288E-04	2.214E-04	454.	1.025E-03	9.907E-04	454.	4.035E-03	3.896E-03
WNW	469.	469.	1.879E-04	1.818E-04	469.	1.003E-03	9.694E-04	469.	4.873E-03	4.704E-03
NW	482.	482.	2.099E-04	2.031E-04	482.	8.706E-04	8.418E-04	482.	3.242E-03	3.130E-03
NNW	466.	466.	2.466E-04	2.387E-04	466.	1.154E-03	1.115E-03	466.	4.144E-03	4.001E-03

DRESDEN SITE METEOROLOGICAL DATA 1/78 - 12/87

Table F-7a (Continued)

Maximum Offsite Finite Plume Gamma Dose Factors Based on 1 cm Depth at the Restricted Area Boundary for Xe-137

Downwind Direction	Restricted Area Bound (meters)	Elevated(Stack) Release Radius (meters)	S (mrad/yr)/(uCi/sec)	SBAR	Mixed Mode(Vent) Release Radius (meters)	V (mrad/yr)/(uCi/sec)	VBAR	Ground Level Release Radius (meters)	G (mrad/yr)/(uCi/sec)	GBAR
N	466.	466.	2.127E-04	2.059E-04	466.	7.271E-04	7.036E-04	466.	1.667E-03	1.613E-03
NNE	698.	698.	1.306E-04	1.264E-04	698.	3.407E-04	3.298E-04	698.	7.018E-04	6.790E-04
NE	646.	646.	1.257E-04	1.217E-04	646.	3.320E-04	3.212E-04	646.	7.049E-04	6.821E-04
ENE	646.	646.	1.091E-04	1.056E-04	646.	2.481E-04	2.401E-04	646.	4.587E-04	4.439E-04
E	689.	689.	1.235E-04	1.196E-04	689.	3.634E-04	3.517E-04	689.	7.273E-04	7.037E-04
ESE	661.	661.	1.199E-04	1.161E-04	661.	3.234E-04	3.130E-04	661.	7.065E-04	6.836E-04
SE	664.	664.	1.152E-04	1.116E-04	664.	3.001E-04	2.904E-04	664.	6.732E-04	6.514E-04
SSE	744.	744.	8.688E-05	8.410E-05	744.	2.147E-04	2.078E-04	744.	4.630E-04	4.480E-04
S	814.	814.	5.937E-05	5.747E-05	814.	1.464E-04	1.416E-04	814.	2.744E-04	2.655E-04
SSW	789.	789.	6.060E-05	5.866E-05	789.	1.492E-04	1.444E-04	789.	3.031E-04	2.933E-04
SW	414.	414.	1.639E-04	1.586E-04	414.	4.811E-04	4.656E-04	414.	1.355E-03	1.311E-03
WSW	360.	360.	2.140E-04	2.072E-04	360.	5.836E-04	5.648E-04	360.	1.551E-03	1.500E-03
W	454.	454.	1.459E-04	1.412E-04	454.	4.851E-04	4.694E-04	454.	1.350E-03	1.306E-03
WNW	469.	469.	1.216E-04	1.177E-04	469.	4.653E-04	4.503E-04	469.	1.456E-03	1.409E-03
NW	482.	482.	1.353E-04	1.310E-04	482.	3.948E-04	3.821E-04	482.	9.630E-04	9.318E-04
NNW	466.	466.	1.616E-04	1.564E-04	466.	5.529E-04	5.350E-04	466.	1.478E-03	1.430E-03

DRESDEN SITE METEOROLOGICAL DATA 1/78 - 12/87

Table F-7a (Continued)

Maximum Offsite Finite Plume Gamma Dose Factors Based on 1 cm Depth at the Restricted Area Boundary for Xe-138

Downwind Direction	Restricted Area Bound (meters)	Elevated(Stack) Release Radius (meters)	S (mrad/yr)/(uCi/sec)	SBAR (mrad/yr)/(uCi/sec)	Mixed Mode(Vent) Release Radius (meters)	V (mrad/yr)/(uCi/sec)	VBAR (mrad/yr)/(uCi/sec)	Ground Level Release Radius (meters)	G (mrad/yr)/(uCi/sec)	GBAR (mrad/yr)/(uCi/sec)
N	466.	466.	1.468E-03	1.426E-03	466.	4.715E-03	4.578E-03	466.	1.246E-02	1.209E-02
NNE	698.	698.	9.601E-04	9.331E-04	698.	2.564E-03	2.490E-03	698.	6.418E-03	6.229E-03
NE	646.	646.	9.374E-04	9.110E-04	646.	2.497E-03	2.425E-03	646.	6.435E-03	6.245E-03
ENE	646.	646.	8.443E-04	8.205E-04	646.	1.879E-03	1.825E-03	646.	4.133E-03	4.011E-03
E	689.	689.	9.378E-04	9.114E-04	689.	2.697E-03	2.619E-03	689.	6.357E-03	6.169E-03
ESE	661.	661.	8.926E-04	8.675E-04	661.	2.364E-03	2.296E-03	661.	6.229E-03	6.045E-03
SE	664.	664.	8.697E-04	8.452E-04	664.	2.234E-03	2.169E-03	664.	6.239E-03	6.055E-03
SSE	744.	744.	6.807E-04	6.615E-04	744.	1.712E-03	1.663E-03	744.	4.744E-03	4.604E-03
S	814.	814.	5.066E-04	4.923E-04	814.	1.258E-03	1.222E-03	814.	3.226E-03	3.132E-03
SSW	789.	789.	5.116E-04	4.972E-04	789.	1.277E-03	1.240E-03	789.	3.392E-03	3.292E-03
SW	414.	414.	1.162E-03	1.130E-03	414.	3.252E-03	3.158E-03	414.	1.069E-02	1.037E-02
WSW	360.	360.	1.499E-03	1.456E-03	360.	3.830E-03	3.720E-03	360.	1.153E-02	1.118E-02
W	454.	454.	1.077E-03	1.047E-03	454.	3.311E-03	3.215E-03	454.	1.049E-02	1.018E-02
WNW	469.	469.	8.887E-04	8.637E-04	469.	3.209E-03	3.117E-03	469.	1.173E-02	1.138E-02
NW	482.	482.	9.879E-04	9.601E-04	482.	2.746E-03	2.666E-03	482.	7.834E-03	7.602E-03
NNW	466.	466.	1.151E-03	1.118E-03	466.	3.684E-03	3.578E-03	466.	1.109E-02	1.076E-02

DRESDEN SITE METEOROLOGICAL DATA 1/78 - 12/87

Table F-7a (Continued)

Maximum Offsite Finite Plume Gamma Dose Factors Based on 1 cm Depth at the Restricted Area Boundary for Ar-41

Downwind Direction	Restricted Area Bound (meters)	Elevated(Stack) Release Radius (meters)	S (mrad/yr)/(uCi/sec)	SBAR (mrad/yr)/(uCi/sec)	Mixed Mode(Vent) Release Radius (meters)	V (mrad/yr)/(uCi/sec)	VBAR (mrad/yr)/(uCi/sec)	Ground Level Release Radius (meters)	G (mrad/yr)/(uCi/sec)	GBAR (mrad/yr)/(uCi/sec)
N	466.	466.	1.683E-03	1.629E-03	466.	5.680E-03	5.499E-03	466.	1.694E-02	1.640E-02
NNE	698.	698.	1.121E-03	1.085E-03	698.	3.281E-03	3.176E-03	698.	9.289E-03	8.992E-03
NE	646.	646.	1.097E-03	1.062E-03	646.	3.240E-03	3.136E-03	646.	9.820E-03	9.505E-03
ENE	646.	646.	9.994E-04	9.674E-04	646.	2.434E-03	2.356E-03	646.	6.194E-03	5.996E-03
E	689.	689.	1.105E-03	1.070E-03	689.	3.488E-03	3.377E-03	689.	9.290E-03	8.992E-03
ESE	661.	661.	1.046E-03	1.012E-03	661.	3.041E-03	2.944E-03	661.	9.182E-03	8.888E-03
SE	664.	664.	1.022E-03	9.898E-04	664.	2.834E-03	2.744E-03	664.	9.514E-03	9.210E-03
SSE	744.	744.	8.133E-04	7.873E-04	744.	2.256E-03	2.184E-03	744.	7.558E-03	7.316E-03
S	814.	814.	6.637E-04	6.424E-04	814.	1.716E-03	1.661E-03	814.	5.761E-03	5.577E-03
SSW	789.	789.	6.528E-04	6.319E-04	789.	1.728E-03	1.673E-03	789.	5.704E-03	5.521E-03
SW	414.	414.	1.342E-03	1.299E-03	414.	4.046E-03	3.917E-03	414.	1.524E-02	1.475E-02
WSW	360.	360.	1.694E-03	1.640E-03	360.	4.622E-03	4.474E-03	360.	1.573E-02	1.523E-02
W	454.	454.	1.257E-03	1.217E-03	454.	4.055E-03	3.926E-03	454.	1.422E-02	1.377E-02
WNW	469.	469.	1.025E-03	9.921E-04	469.	3.940E-03	3.814E-03	469.	1.699E-02	1.644E-02
NW	482.	482.	1.138E-03	1.102E-03	482.	3.437E-03	3.327E-03	482.	1.131E-02	1.095E-02
NNW	466.	466.	1.329E-03	1.287E-03	466.	4.522E-03	4.377E-03	466.	1.469E-02	1.422E-02

DRESDEN SITE METEOROLOGICAL DATA 1/78 - 12/87

Table F-8
Parameters for Calculations of N-16 Skyshine Radiation From Dresden 2/3

Location Number k	Activity	Occupancy Hours OH_k[a]	Occupancy Factor OF_k	Shielding Factor SF_k	Distance R_k (m)
1	Living at home (nearest resident)	8344	0.95	0.7	800[b]
2	Fishing	416	0.05	1.0	610[c]

$M_h = 5$
K = 3.60E-05 mrem/(MWe-hr)

These parameters are used to obtain an initial estimate of skyshine dose to the maximally exposed member of the public using Equation A-34 in Appendix A. If desired, more realistic parameters could be used in place of these to refine the estimate. For example, one could determine whether the nearest resident really fishes the specified number of hours at the specified location.

[a] The amount of time in a year that a maximally exposed fisherman would spend fishing near the site is estimated as 12 hours per week for 8 months per year. This yields an estimate of:

[12 hours/week] [(8 months/yr)/(12 months/yr)] x [52 weeks/yr] = 416 hours/yr

The remaining time is assumed to be spent at the nearest residence.

[b] Distance to nearest residence (See Table F-3).

[c] Estimated from a drawing of the site.

[d] The OF_k is the quotient of the number of hours a location is occupied and the number of hours in a year. Thus OH_k/8760 hours = OF_k rounded to the 0.01 digit.

Revision 2
December 2002

Supplemental Table A

Elevated Level Joint Frequency Distribution Table Summary

300 Foot Elevation Data

Summary Table of Percent by Direction and Class

Class	N	NNE	NE	ENE	E	ESE	SE	SSE	S	SSW	SW	WSW	W	WNW	NW	NNW	Total
A	.237	.222	.188	.164	.115	.096	.105	.102	.152	.146	.167	.131	.207	.314	.367	.344	3.057
B	.206	.200	.176	.155	.123	.146	.151	.162	.252	.263	.241	.209	.256	.285	.287	.311	3.422
C	.289	.246	.260	.236	.225	.194	.240	.268	.338	.441	.350	.362	.515	.475	.469	.462	5.368
D	2.028	1.971	2.457	2.687	2.343	1.689	1.747	2.186	3.098	3.087	2.485	2.307	3.602	3.350	2.953	2.887	40.876
E	1.342	1.352	1.520	1.778	1.954	1.906	1.965	2.433	3.771	3.815	2.856	1.904	2.374	2.231	2.033	1.550	34.782
F	.494	.476	.397	.244	.257	.463	.777	.745	.816	.938	1.089	1.076	.793	.587	.644	.450	10.246
G	.146	.141	.083	.039	.034	.026	.112	.156	.128	.189	.288	.275	.256	.135	.125	.117	2.250
Total	4.742	4.607	5.080	5.304	5.050	4.520	5.098	6.052	8.554	8.879	7.475	6.263	8.002	7.376	6.878	6.119	100.000

Summary Table of Percent by Direction and Speed

Speed	N	NNE	NE	ENE	E	ESE	SE	SSE	S	SSW	SW	WSW	W	WNW	NW	NNW	Total
.45	.033	.021	.017	.006	.007	.000	.000	.007	.010	.000	.000	.000	.006	.000	.000	.000	.109
1.05	.035	.035	.031	.051	.052	.037	.035	.026	.043	.033	.031	.035	.027	.026	.033	.034	.565
2.05	.240	.209	.213	.244	.265	.223	.216	.220	.221	.171	.235	.249	.223	.240	.229	.210	3.608
3.05	.413	.474	.462	.559	.536	.481	.484	.474	.482	.413	.496	.575	.596	.433	.416	.416	7.710
4.05	.652	.572	.744	.896	.759	.520	.700	.726	.749	.620	.647	.754	.771	.627	.678	.608	11.024
5.05	.638	.640	.751	1.062	.785	.563	.778	.797	.771	.794	.729	.724	.840	.692	.847	.739	12.151
6.05	.710	.605	.853	.940	.818	.654	.762	.829	.974	1.065	.913	.869	1.050	.912	1.017	.862	13.834
8.05	1.133	1.167	1.237	1.078	1.077	1.192	1.375	1.555	2.228	2.493	2.202	1.632	1.994	2.028	2.036	1.828	26.254
10.05	.559	.552	.554	.386	.508	.506	.515	.850	1.612	1.793	1.286	.848	1.253	1.396	1.082	.924	14.623
13.05	.252	.269	.174	.072	.221	.311	.194	.449	1.140	1.189	.761	.415	.887	.780	.476	.385	7.972
18.00	.074	.064	.046	.008	.021	.033	.038	.117	.305	.293	.159	.146	.326	.214	.063	.110	2.017
99.00	.004	.000	.000	.000	.000	.001	.000	.001	.020	.014	.017	.015	.028	.028	.001	.002	.132
Total	4.742	4.607	5.080	5.304	5.050	4.520	5.098	6.052	8.554	8.879	7.475	6.263	8.002	7.376	6.878	6.119	100.000

NOTE: Wind directions in tables are presented in "wind *from*" and not "wind to" direction.

Supplemental Table A -Continued

Elevated Level Joint Frequency Distribution Table Summary

300 Foot Elevation Data

Summary Table of Percent by Speed and Class

Class Speed	A	B	C	D	E	F	G
.45	.000	.000	.001	.019	.041	.033	.014
1.05	.005	.008	.026	.188	.203	.107	.027
2.05	.078	.132	.229	1.618	.979	.454	.118
3.05	.279	.358	.624	3.471	1.971	.744	.263
4.05	.502	.572	.830	4.500	3.159	1.166	.295
5.05	.465	.513	.730	4.832	4.013	1.287	.311
6.05	.464	.487	.683	5.529	4.808	1.541	.322
8.05	.687	.768	1.127	9.927	9.863	3.289	.593
10.05	.331	.353	.627	5.846	5.844	1.371	.250
13.05	.222	.202	.370	3.766	3.118	.240	.054
18.00	.024	.030	.115	1.115	.720	.013	.001
99.00	.000	.000	.007	.065	.060	.000	.000

Revision 2
December 2002

Supplemental Table B

Mixed Mode Joint Frequency Distribution Table Summaries

150 Foot Elevation Data

Summary Table of Percent by Direction and Class

Class	N	NNE	NE	ENE	E	ESE	SE	SSE	S	SSW	SW	WSW	W	WNW	NW	NNW	Total
A	.609	.428	.323	.250	.369	.452	.457	.508	.703	.775	.741	.777	.698	.809	.949	.972	9.821
B	.096	.098	.107	.086	.104	.129	.110	.157	.157	.192	.163	.184	.193	.143	.144	.146	2.210
C	.125	.116	.125	.121	.112	.130	.102	.127	.163	.200	.162	.121	.198	.177	.165	.150	2.295
D	1.083	.984	1.267	1.306	1.295	.929	.875	1.120	1.395	1.253	.982	.897	1.489	1.173	1.335	1.316	18.699
E	1.434	1.483	1.944	2.233	2.262	2.055	1.655	2.545	3.353	2.529	1.988	1.218	2.653	2.113	2.091	1.702	33.259
F	.446	.434	.397	.301	.451	.687	.867	.643	1.036	1.224	1.167	.609	.864	.699	.539	.417	10.781
G	.200	.123	.094	.084	.069	.105	.366	.230	.187	.269	.557	.633	.318	.207	.208	.167	3.816
Total	3.993	3.665	4.256	4.381	4.662	4.488	4.433	5.332	6.995	6.441	5.760	4.440	6.413	5.322	5.430	4.870	80.882

Summary Table of Percent by Direction and Speed

Speed	N	NNE	NE	ENE	E	ESE	SE	SSE	S	SSW	SW	WSW	W	WNW	NW	NNW	Total
.45	.018	.007	.051	.007	.006	.004	.006	.018	.005	.007	.017	.006	.007	.017	.006	.016	.198
1.05	.051	.070	.064	.060	.057	.056	.049	.056	.047	.062	.053	.058	.067	.060	.058	.064	.934
2.05	.361	.306	.365	.421	.392	.371	.340	.315	.397	.349	.380	.388	.432	.347	.339	.324	5.828
3.05	.664	.674	.698	.841	.796	.687	.763	.758	.789	.708	.763	.713	.738	.593	.614	.579	11.379
4.05	.799	.731	.854	1.101	1.045	.877	.943	.990	1.074	1.024	.922	.757	.972	.790	.847	.891	14.617
5.05	.803	.649	.799	.958	.993	1.025	.984	1.109	1.238	1.225	1.126	.862	1.146	.910	1.086	1.024	15.937
6.05	.514	.475	.591	.504	.582	.685	.650	.788	1.151	1.084	.937	.584	.998	.849	.906	.761	12.060
8.05	.609	.549	.672	.429	.598	.609	.534	.939	1.646	1.404	1.175	.809	1.436	1.219	1.161	.938	14.726
10.05	.157	.180	.151	.057	.175	.161	.151	.328	.565	.518	.345	.232	.556	.481	.382	.246	4.685
13.05	.015	.024	.012	.003	.018	.014	.012	.031	.084	.061	.040	.030	.061	.056	.032	.027	.519
18.00	.000	.000	.000	.000	.000	.000	.000	.000	.000	.000	.000	.000	.000	.000	.000	.000	.000
99.00	.000	.000	.000	.000	.000	.000	.000	.000	.000	.000	.000	.000	.000	.000	.000	.000	.000
Total	3.993	3.665	4.256	4.381	4.662	4.488	4.433	5.332	6.995	6.441	5.760	4.440	6.413	5.322	5.430	4.870	80.882

NOTE: Wind directions in tables are presented in "wind from" and not "wind to" direction.

In order to determine the final mixed mode values, 80.882% of the elevated value (presented in the 250 FT Mixed Mode table) and 19.118% of the ground level value (presented in the 30 FT Mixed Mode table) are used to calculate the final values.

Supplemental Table B - Continued

Mixed Mode Joint Frequency Distribution Table Summaries

150 Foot Elevation Data

Summary Table of Percent by Speed and Class

Class Speed	A	B	C	D	E	F	G
.45	.006	.001	.000	.023	.075	.042	.050
1.05	.029	.008	.016	.170	.315	.227	.168
2.05	.616	.180	.206	1.247	1.986	.952	.640
3.05	1.657	.385	.309	2.341	4.046	1.830	.811
4.05	1.968	.404	.379	2.832	5.796	2.433	.806
5.05	1.618	.384	.416	3.451	6.745	2.558	.765
6.05	1.363	.289	.300	2.823	5.242	1.621	.421
8.05	1.866	.405	.480	4.055	6.729	1.038	.153
10.05	.623	.138	.166	1.573	2.108	.076	.001
13.05	.075	.016	.023	.184	.217	.004	.000
18.00	.000	.000	.000	.000	.000	.000	.000
99.00	.000	.000	.000	.000	.000	.000	.000

Revision 2
December 2002

Supplemental Table B - Continued

Mixed Mode Joint Frequency Distribution Table Summaries

35 Foot Elevation Data

Summary Table of Percent by Direction and Class

Class	N	NNE	NE	ENE	E	ESE	SE	SSE	S	SSW	SW	WSW	W	WNW	NW	NNW	Total
A	.090	.090	.064	.038	.051	.064	.066	.093	.205	.246	.208	.171	.187	.243	.224	.180	2.219
B	.019	.017	.019	.010	.014	.015	.014	.029	.047	.065	.036	.044	.068	.062	.039	.029	.528
C	.022	.022	.023	.012	.016	.019	.013	.033	.060	.077	.040	.040	.064	.086	.057	.045	.632
D	.286	.274	.251	.181	.274	.191	.176	.339	.577	.455	.308	.309	.573	.513	.416	.394	5.517
E	.295	.318	.345	.293	.481	.444	.372	.726	1.028	.719	.473	.371	.907	.736	.537	.387	8.433
F	.035	.041	.027	.014	.054	.138	.086	.123	.159	.164	.161	.077	.128	.089	.063	.061	1.420
G	.005	.002	.005	.001	.009	.055	.016	.013	.033	.054	.079	.022	.017	.016	.023	.018	.369
Total	.752	.764	.734	.550	.899	.927	.743	1.357	2.109	1.780	1.305	1.034	1.944	1.746	1.359	1.115	19.118

Summary Table of Percent by Direction and Speed

Speed	N	NNE	NE	ENE	E	ESE	SE	SSE	S	SSW	SW	WSW	W	WNW	NW	NNW	Total
.45	.000	.001	.000	.001	.000	.000	.004	.000	.000	.000	.003	.003	.007	.003	.000	.000	.023
1.05	.004	.002	.002	.002	.002	.001	.003	.006	.008	.011	.007	.004	.004	.005	.004	.004	.069
2.05	.053	.064	.047	.037	.057	.076	.037	.060	.078	.098	.081	.040	.064	.057	.069	.068	.985
3.05	.128	.145	.156	.162	.203	.261	.122	.175	.189	.178	.184	.095	.202	.182	.162	.181	2.727
4.05	.152	.142	.200	.161	.192	.193	.163	.238	.251	.213	.189	.146	.273	.220	.233	.210	3.176
5.05	.107	.098	.117	.096	.122	.117	.112	.176	.220	.179	.157	.130	.229	.216	.199	.151	2.425
6.05	.105	.080	.090	.041	.098	.086	.076	.150	.203	.208	.138	.123	.228	.201	.181	.125	2.133
8.05	.159	.196	.104	.040	.190	.133	.151	.332	.549	.459	.309	.244	.587	.528	.372	.240	4.592
10.05	.037	.034	.016	.010	.031	.049	.062	.166	.422	.336	.167	.141	.226	.247	.109	.117	2.170
13.05	.008	.000	.002	.000	.003	.009	.013	.050	.173	.087	.064	.091	.107	.076	.029	.019	.733
18.00	.000	.000	.000	.000	.000	.000	.000	.004	.016	.012	.006	.018	.014	.012	.001	.000	.082
99.00	.000	.000	.000	.000	.000	.000	.000	.000	.000	.000	.000	.000	.001	.000	.000	.000	.001
Total	.752	.764	.734	.550	.899	.927	.743	1.357	2.109	1.780	1.305	1.034	1.944	1.746	1.359	1.115	19.118

NOTE: Wind directions in tables are presented in "wind from" and not "wind to" direction.

Supplemental Table B - Continued

Mixed Mode Joint Frequency Distribution Table Summaries

35 Foot Elevation Data

Summary Table of Percent by Speed and Class

Class Speed	A	B	C	D	E	F	G
.45	.000	.000	.000	.007	.007	.003	.005
1.05	.000	.000	.000	.007	.013	.027	.022
2.05	.007	.006	.005	.064	.379	.369	.156
3.05	.198	.045	.047	.474	1.240	.573	.150
4.05	.363	.078	.089	.825	1.490	.298	.033
5.05	.349	.076	.084	.712	1.124	.078	.002
6.05	.305	.067	.079	.693	.956	.033	.000
8.05	.601	.147	.181	1.630	1.998	.036	.000
10.05	.304	.085	.109	.789	.881	.002	.000
13.05	.090	.022	.033	.271	.318	.000	.000
18.00	.001	.004	.005	.044	.028	.000	.000
99.00	.000	.000	.000	.001	.000	.000	.000

Revision 2
December 2002

Supplemental Table C

Ground Level Joint Frequency Distribution Table Summary

DRESDEN JFD 1978-1987 GROUND LEVEL (35 FT)

Summary Table of Percent by Direction and Class

Class	N	NNE	NE	ENE	E	ESE	SE	SSE	S	SSW	SW	WSW	W	WNW	NW	NNW	Total
A	.688	.524	.386	.304	.405	.510	.547	.580	.888	1.027	.915	.946	.913	1.070	1.259	1.093	12.055
B	.129	.119	.126	.094	.122	.140	.121	.187	.216	.255	.168	.237	.249	.224	.195	.152	2.733
C	.146	.138	.143	.127	.127	.155	.112	.169	.220	.273	.182	.160	.254	.286	.220	.203	2.919
D	1.337	1.295	1.544	1.343	1.569	1.166	1.044	1.517	1.913	1.732	1.218	1.163	2.085	1.788	1.814	1.707	24.236
E	1.744	1.823	2.399	2.168	2.907	2.736	2.170	3.654	3.985	3.034	2.273	1.533	3.470	3.018	2.679	2.131	41.723
F	.429	.442	.389	.266	.618	1.217	.778	.956	1.166	1.166	1.165	.597	.971	.793	.631	.588	12.171
G	.120	.082	.056	.054	.121	.551	.170	.188	.327	.483	.643	.197	.178	.262	.390	.338	4.163
Total	4.593	4.424	5.043	4.356	5.871	6.475	4.942	7.252	8.715	7.968	6.564	4.833	8.121	7.442	7.189	6.212	100.000

Summary Table of Percent by Direction and Speed

Speed	N	NNE	NE	ENE	E	ESE	SE	SSE	S	SSW	SW	WSW	W	WNW	NW	NNW	Total
.45	.078	.056	.077	.053	.029	.091	.058	.014	.052	.020	.070	.034	.049	.049	.058	.050	.838
1.05	.361	.229	.265	.227	.240	.216	.234	.251	.267	.259	.246	.182	.231	.265	.299	.287	4.058
2.05	1.046	1.188	1.118	.939	1.244	1.445	.921	1.150	1.236	1.363	1.216	.807	1.109	1.051	1.272	1.264	18.369
3.05	1.096	1.186	1.370	1.484	1.764	2.167	1.228	1.594	1.597	1.470	1.477	.932	1.624	1.476	1.383	1.496	23.345
4.05	.884	.799	1.177	.983	1.208	1.227	1.084	1.531	1.592	1.357	1.143	.896	1.559	1.330	1.407	1.263	19.439
5.05	.501	.421	.571	.422	.632	.615	.624	.976	1.196	.984	.844	.707	1.146	1.135	1.047	.779	12.600
6.05	.335	.237	.301	.160	.393	.379	.365	.704	.926	.962	.625	.541	.979	.838	.815	.504	9.064
8.05	.246	.275	.146	.077	.324	.273	.343	.785	1.173	1.062	.680	.477	1.063	.949	.761	.428	9.062
10.05	.037	.034	.016	.010	.033	.055	.072	.194	.487	.391	.192	.150	.237	.261	.117	.122	2.409
13.05	.008	.000	.002	.000	.003	.009	.013	.050	.173	.087	.064	.091	.107	.076	.029	.019	.732
18.00	.000	.000	.000	.000	.000	.000	.000	.003	.016	.012	.006	.017	.014	.012	.001	.000	.082
99.00	.000	.000	.000	.000	.000	.000	.000	.000	.000	.000	.000	.000	.001	.000	.000	.000	.001
Total	4.593	4.424	5.043	4.356	5.871	6.475	4.942	7.252	8.715	7.968	6.564	4.833	8.121	7.442	7.189	6.212	100.000

NOTE: Wind directions in tables are presented in "wind from" and not "wind to" direction.

Supplemental Table C - Continued

Ground Level Joint Frequency Distribution Table Summary

Summary Table of Percent by Speed and Class

Class / Speed	A	B	C	D	E	F	G
.45	.012	.003	.003	.073	.274	.260	.212
1.05	.070	.023	.035	.406	1.413	1.326	.785
2.05	1.227	.346	.351	2.809	6.958	4.678	2.000
3.05	2.762	.608	.567	4.668	9.964	3.797	.981
4.05	2.612	.560	.597	5.211	8.689	1.593	.177
5.05	1.995	.422	.463	3.773	5.580	.360	.007
6.05	1.488	.321	.371	2.954	3.827	.103	.001
8.05	1.433	.328	.372	3.159	3.719	.052	.000
10.05	.365	.097	.122	.868	.955	.002	.000
13.05	.090	.022	.033	.271	.317	.000	.000
18.00	.001	.003	.005	.044	.028	.000	.000
99.00	.000	.000	.000	.001	.000	.000	.000

OFFSITE DOSE CALCULATION MANUAL
DRESDEN STATION UNITS 1, 2, & 3

FIGURE F-1
UNRESTRICTED AREA BOUNDARY

DRESDEN

Revision 2
December 2002

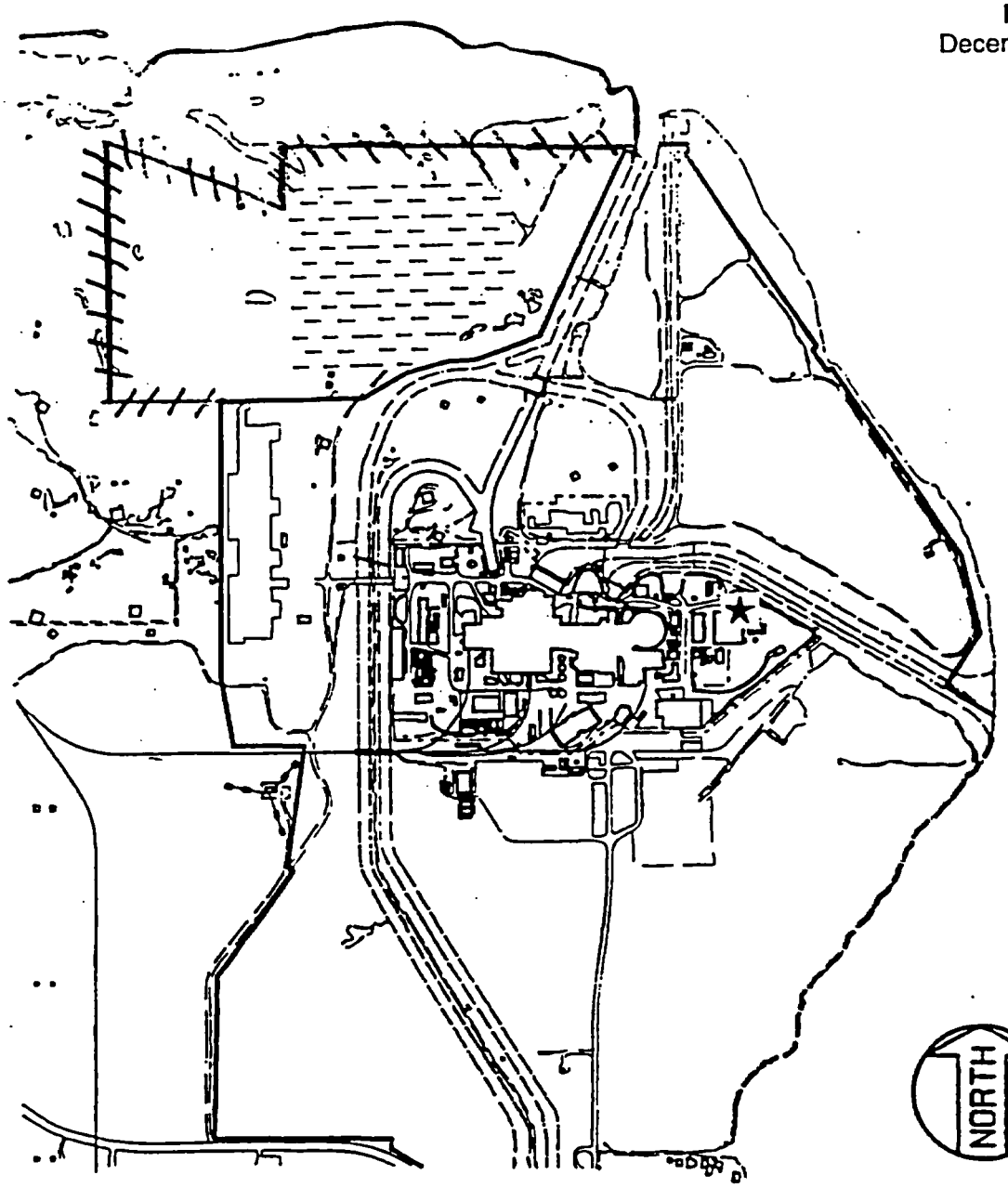

★ Interim Radwaste Storage Facility

Radwaste Storage Area (When Operational, this area may include 48-packs, DAW, and other types of storage)

Restricted Area Boundary - Extended Area (When the Radwaste Storage Area becomes operational, this area becomes part of the total Restricted Area.)

500 0 500 1000 FEET

GRAPHIC SCALE

OFFSITE DOSE CALCULATION MANUAL
DRESDEN STATION

FIGURE F-2

RESTRICTED AREA BOUNDARY