Progress Energy

APR 2 6 2004

10 CFR 50.36a
TS 5.6.3

SERIAL: BSEP 04-0033

U. S. Nuclear Regulatory Commission
ATTN: Document Control Desk
Washington, DC 20555-0001

Subject: Brunswick Steam Electric Plant, Unit Nos. 1 and 2
Docket Nos. 50-325 and 50-324/License Nos. DPR-71 and DPR-62
Radioactive Effluent Release Report for 2003

Ladies and Gentlemen:

In accordance with 10 CFR 50.36a and Brunswick Steam Electric Plant (BSEP) Technical Specification 5.6.3, Carolina Power & Light Company, now doing business as Progress Energy Carolinas, Inc., submits the enclosed Radioactive Effluent Release Report for BSEP, Units 1 and 2. This report covers the period from January 1, 2003, through December 31, 2003. During the reporting period, changes were made to the Offsite Dose Calculation Manual (ODCM). Therefore, in accordance with TS 5.5.1, the Radioactive Effluent Release Report includes a complete copy of the ODCM, Revision 27, in Enclosure 2.

No regulatory commitments are contained in this submittal. Please refer any questions regarding this submittal to Mr. Leonard R. Beller, Supervisor - Licensing/Regulatory Programs, at (910) 457-2073.

Sincerely,

Leonard R. Beller
For

Edward T. O'Neil
Manager - Support Services
Brunswick Steam Electric Plant

MAT/mat

Enclosures:
1. Radioactive Effluent Release Report for 2003
2. Offsite Dose Calculation Manual, Revision 27

Progress Energy Carolinas, Inc.
Brunswick Nuclear Plant
P.O. Box 10429
Southport, NC 28461

IE48

cc (with enclosures as noted):

U. S. Nuclear Regulatory Commission, Region II
ATTN: Mr. Luis A. Reyes, Regional Administrator
Sam Nunn Atlanta Federal Center
61 Forsyth Street, SW, Suite 23T85
Atlanta, GA 30303-8931

U. S. Nuclear Regulatory Commission (w/o Enclosure 2)
ATTN: Mr. Eugene M. DiPaolo, NRC Senior Resident Inspector
8470 River Road
Southport, NC 28461-8869

U. S. Nuclear Regulatory Commission **(Electronic Copy Only)**
ATTN: Ms. Brenda L. Mozafari (Mail Stop OWFN 8G9)
11555 Rockville Pike
Rockville, MD 20852-2738

Ms. Jo A. Sanford (w/o Enclosure 2)
Chair - North Carolina Utilities Commission
P.O. Box 29510
Raleigh, NC 27626-0510

BSEP 04-0033
Enclosure 1

Radioactive Effluent Release Report for 2003

Brunswick Steam Electric Plant
Radioactive Effluent Release Report
January 1, through December 31, 2003

Table of Contents

Attachment		Pages
1.	Effluent and Waste Disposal Report Supplemental Information	2 - 5
2.	Effluent and Waste Disposal Data	6 - 22
3.	Environmental Monitoring Program	23 - 25
4.	Effluent Instrumentation	26 - 31
5.	Major Modification to the Radioactive Waste Treatment Systems	32
6.	Meteorological Data	33
7.	Annual Dose Assessment	34
8.	Off-Site Dose Calculation Manual (ODCM) and Process Control Program (PCP) Revisions	35 - 36

Facility: Brunswick Steam Electric Plant
Licensee: Carolina Power & Light Company, now doing business as Progress Energy Carolinas, Inc.

1. Regulatory Limits

   A. Fission and activation gases (Off-Site Dose Calculation Manual Specification (ODCMS) 7.3.8)

      (1) Calendar Quarter[1]

         (a) ≤ 10 mrad gamma
         (b) ≤ 20 mrad beta

      (2) Calendar Year

         (a) ≤ 20 mrad gamma
         (b) ≤ 40 mrad beta

   B. Iodine-131, iodine-133, tritium, and particulates with half-lives greater than eight days (ODCMS 7.3.9)

      (1) Calendar Quarter[1]

         (a) ≤ 15 mrem to any organ

      (2) Calendar Year

         (a) ≤ 30 mrem to any organ

      (3) Calendar Quarter for Burning Contaminated Oil[1]

         (a) < 0.1 % of limits for calendar quarter of (1)
         (b) 436 μCi (ODCM Appendix H)

      (4) Calendar Year for Burning Contaminated Oil

         (a) < 0.1% of limits for calendar year
         (b) 872 μCi (ODCM Appendix H)

   C. Liquid Effluents (ODCMS 7.3.4)

      (1) Calendar Quarter[2]

         (a) ≤ 3 mrem to total body
         (b) ≤ 10 mrem to any organ

      (2) Calendar Year

         (a) ≤ 6 mrem to total body
         (b) ≤ 10 mrem to any organ

NOTE: Dose calculations are determined in accordance with the ODCM
[1] Used for percent of ODCMS limit determination in Attachment 2, Table 1A
[2] Used for percent of ODCMS limit determination in Attachment 2, Table 2A

2. Maximum permissible concentration and dose rates which determine maximum instantaneous release rates.

   A. Fission and activation gases (ODCMS 7.3.7.a)

      (1) $\leq$ 500 mrem/year to total body
      (2) $\leq$ 3000 mrem/year to the skin

   B. Iodine-131, iodine-133, tritium, and particulates with half-lives greater than eight days (ODCMS 7.3.7.b)

      (1) $\leq$ 1500 mrem/year to any organ

   C. Liquid effluents (ODCMS 7.3.3)

   The concentration of radioactive material released in liquid effluents to unrestricted areas after dilution in the discharge canal shall be limited to 10 times the concentrations specified in Appendix B, Table 2, Column 2 to 10 CFR 20.1001 - 20.2401 for radionuclides other than dissolved or entrained noble gases. For dissolved or entrained noble gases, the concentration shall be limited to the value given in the ODCM specifications.

      (1) Tritium: limit = 1.00E-03 μCi/ml[3]
      (2) Dissolved and entrained noble gases: limit = 2.00E-04 μCi/ml[3]

3. Measurements and Approximations of Total Radioactivity

   A. Fission and activation gases

      (1) Analyses for specific radionuclides in representative grab samples by gamma spectroscopy.

   B. Iodines

      (1) Analysis for specific radionuclides collected on charcoal cartridges by gamma spectroscopy.

   C. Particulates

      (1) Analysis for specific radionuclides collected on filter papers by gamma spectroscopy.

   D. Particulates for Burning Oil

      (1) Analysis for specific radionuclides by grab samples of each batch of oil to be burned.

   E. Liquid Effluents

      (1) Analysis for specific radionuclides of individual releases by gamma spectroscopy.

[3] Used as applicable limits for Attachment 2, Table 2A

Nuclear counting statistics are reported utilizing 1-sigma error. Total error where reported represents a best effort to approximate the total of all individual and sampling errors.

4. Batch Releases

A. Liquid

(1) Number of batch releases:	3.40E+01
(2) Total time period for batch releases:	3.21E+03 Minutes
(3) Maximum time period for a batch release:	2.29E+02 Minutes
(4) Average time period for a batch release:	9.43E+01 Minutes
(5) Minimum time period for a batch release:	2.00E+00 Minutes
(6) Average stream flow during periods of release of effluent into a flowing stream:	8.39E+05 Gallons per Minute

B. Gaseous

(1) Number of batch releases:	0.00E+00
(2) Total time period for batch releases:	0.00E+00 Minutes
(3) Maximum time period for a batch release:	0.00E+00 Minutes
(4) Average time period for a batch release:	0.00E+00 Minutes
(5) Minimum time period for a batch release:	0.00E+00 Minutes

5. Abnormal Releases[4]

A. Liquid

(1) Number of releases:	0.00E+00
(2) Total activity released:	0.00E+00 Curies

B. Gaseous

(1) Number of releases:	0.00E+00
(2) Total activity released:	0.00E+00 Curies

[4] There were no abnormal releases that exceeded 10 CFR 20 or 10 CFR 50 limits. See page 5 for a discussion of release events that occurred.

Discussion of tritium in the Storm Drain Stabilization pond

Approximately 4.72E+07 gallons containing 5.08E+01 curies of tritium were released from the Storm Drain Stabilization Pond (SDSP) to the intake canal during this reporting period. This resulted in an estimated maximum dose to the individual of 8.47E-05 mrem. The SDSP is a permitted release point. A breech in the supporting dike of the SDSP occurred in March of the reporting period and is discussed on Attachment 4, Enclosure 1 (Radioactive Liquid Effluent Monitoring Instrumentation – ODCM 7.3.1). From the yearly sum, a total of 1.74E+07 gallons and 1.45E+01 curies of tritium can be attributed to the control and repair of this breech.

Discussion of Releases from the Storm Drain Collector Basin

Due to periodic heavy rains, the Storm Drain Collector Basin (SDCB) was released directly to the discharge canal on three separate occasions in 2003. The SDCB is a permitted release point during periods of inclement weather to protect plant personnel and equipment.

(1) On March 20th, the SDCB overboard valves were open for 2.3 hours and approximately 8.22E+04 gallons containing 8.40E-03 curies of tritium were released. This resulted in an estimated maximum dose to the individual of 2.51E-08 mrem.

(2) On April 25th, the SDCB overboard valves were open for 57 minutes and approximately 1.27E+05 gallons containing 6.13E-03 curies of tritium were released. This resulted in an estimated maximum dose to the individual of 8.83E-09 mrem.

(3) On May 23rd, the SDCB overboard valves were open for 1.8 hours and approximately 5.62E+04 gallons containing 3.87E-03 curies of tritium were released. This resulted in an estimated maximum dose to the individual of 5.57E-09 mrem.

Summary

SDCB curie totals are included in the quarterly summaries for FISSION AND ACTIVIATION PRODUCTS and TRITIUM on Attachment 2, Table 2A when applicable.

The quantity of rainwater released from the storm drain stabilization pond and/or the SDCB is not included in the average diluted concentration determination or VOLUME OF WASTE RELEASED on Attachment 2, Table 2A.

Attachment 2
Effluent and Waste Disposal Data

Table 1A	Gaseous Effluents - Summation of all Releases
Table 1B	Gaseous Effluents - Elevated Releases
Table 1C	Gaseous Effluents - Ground Level Releases
Table 1D	Gaseous Effluents - Ground Level Releases for Burning Contaminated Oil
Table 2A	Liquid Effluents - Summation of all Releases
Table 2B	Liquid Effluents - Batch Mode
	Lower Limits of Detection
Table 3A	Solid Waste and Irradiated Fuel Shipments - Waste Class A
Table 3B	Solid Waste and Irradiated Fuel Shipments - Waste Class B
Table 3C	Solid Waste and Irradiated Fuel Shipments - Waste Class C
	Combustion of Waste Oil

Attachment 2
Effluent and Waste Disposal Data

Table 1A: Gaseous Effluents - Summation of all Releases

A. FISSION AND ACTIVATION GASES

	Unit	Quarter 1	Quarter 2	Quarter 3	Quarter 4	Estimated Total Percent Error
1. Total release	Ci	2.92E+01	3.61E+01	6.86E+01	3.66E+01	4.50E+01
2. Average release rate for period	µCi/sec	3.76E+00	4.60E+00	8.63E+00	4.60E+00	NA
3. Percent of ODCM limit	%	6.66E-03	7.60E-03	1.37E-02	9.09E-03	NA

B. IODINES

	Unit	Quarter 1	Quarter 2	Quarter 3	Quarter 4	Estimated Total Percent Error
1. Total Iodine - 131 release	Ci	2.03E-03	6.64E-03	2.23E-03	1.95E-03	3.50E+01
2. Average release rate for period	µCi/sec	2.61E-04	8.45E-04	2.80E-04	2.45E-04	NA

C. PARTICULATES

	Unit	Quarter 1	Quarter 2	Quarter 3	Quarter 4	Estimated Total Percent Error
1. Total release	Ci	9.32E-04	5.88E-04	4.76E-04	4.40E-04	3.50E+01
2. Average release rate for period	µCi/sec	1.20E-04	7.48E-05	5.99E-05	5.53E-05	NA
3. Gross Alpha	Ci	0.00E+00	0.00E+00	1.20E-06	0.00E+00	3.50E+01

D. TRITIUM

	Unit	Quarter 1	Quarter 2	Quarter 3	Quarter 4	Estimated Total Percent Error
1. Total release	Ci	3.52E+01	1.58E+01	2.31E+01	2.07E+01	3.00E+01
2. Average release rate for period	µCi/sec	4.52E+00	2.00E+00	2.91E+00	2.61E+00	NA

Attachment 2
Effluent and Waste Disposal Data

Table 1A: Gaseous Effluents - Summation of all Releases

E. IODINE-131, IODINE-133, TRITIUM AND PARTICULATES

	Unit	Quarter 1	Quarter 2	Quarter 3	Quarter 4
1. Total release	Ci	3.52E+01	1.58E+01	2.31E+01	2.07E+01
2. Average release rate for period	µCi/sec	4.52E+00	2.01E+00	2.91E+00	2.61E+00
3. Percent of ODCM limit	%	8.67E-02	2.22E-01	7.80E-02	6.87E-02

F. PARTICULATES VIA BURINING CONTAMINATED OIL

	Unit	Quarter 1	Quarter 2	Quarter 3	Quarter 4
1. Total release	Ci	0.00E+00	0.00E+00	0.00E+00	0.00E+00
2. Average release rate for period	µCi/sec	0.00E+00	0.00E+00	0.00E+00	0.00E+00
3. Percent of ODCM limit	%	0.00E+00	0.00E+00	0.00E+00	0.00E+00

Attachment 2
Effluent and Waste Disposal Data

Table 1B: Gaseous Effluents - Elevated Releases
Continuous Release

Nuclides Released

1. FISSION GASES

	Unit	Quarter 1	Quarter 2	Quarter 3	Quarter 4
krypton-85m	Ci	1.87E-01	1.58E+00	3.58E+00	7.80E-01
krypton-87	Ci	2.88E-01	8.67E-02	2.97E+00	6.81E-01
krypton-88	Ci	4.49E-01	≤ LLD	3.45E+00	3.73E-02
xenon-133	Ci	3.40E-01	8.43E+00	2.09E+01	1.21E+01
xenon-133m	Ci	≤ LLD	≤ LLD	≤ LLD	≤ LLD
xenon-135	Ci	1.10E+01	8.35E+00	1.07E+01	4.58E+00
xenon-135m	Ci	1.09E+01	9.31E+00	7.59E+00	6.11E+00
xenon-137	Ci	≤ LLD	≤ LLD	4.56E+00	≤ LLD
xenon-138	Ci	4.63E+00	7.01E+00	1.34E+01	1.05E+01
total for period	Ci	2.78E+01	3.48E+01	6.71E+01	3.48E+01

2. GASEOUS IODINES

	Unit	Quarter 1	Quarter 2	Quarter 3	Quarter 4
iodine-131	Ci	1.67E-03	6.38E-03	2.18E-03	1.89E-03
iodine-132	Ci	1.48E-02	1.76E-02	1.80E-02	1.62E-02
iodine-133	Ci	1.39E-02	1.38E-02	1.40E-02	1.36E-02
iodine-134	Ci	4.67E-03	5.46E-03	1.63E-02	1.39E-02
iodine-135	Ci	2.39E-02	2.40E-02	2.54E-02	2.41E-02
total for period	Ci	5.90E-02	6.73E-02	7.58E-02	6.96E-02

3. PARTICULATES

	Unit	Quarter 1	Quarter 2	Quarter 3	Quarter 4
chromium-51	Ci	1.42E-05	3.75E-05	3.57E-06	≤LLD
manganese-54	Ci	1.80E-06	3.02E-06	2.88E-07	≤LLD
cobalt-58	Ci	9.31E-06	1.26E-05	2.26E-06	≤LLD
cobalt-60	Ci	5.64E-05	1.48E-05	9.34E-07	≤LLD
zinc-65	Ci	≤ LLD	1.16E-05	1.10E-06	≤LLD
strontium-89	Ci	3.24E-05	5.45E-05	5.16E-05	5.04E-05
strontium-90	Ci	4.72E-07	4.98E-07	7.75E-07	5.22E-07
cesium-137	Ci	1.91E-06	≤ LLD	≤LLD	1.99E-06
barium-140	Ci	8.73E-05	1.15E-04	1.53E-04	1.33E-04
lanthanum-140	Ci	1.53E-04	1.86E-04	2.39E-04	2.29E-04
total for period	Ci	3.56E-04	4.36E-04	4.53E-04	4.15E-04

4. TRITIUM

	Unit	Quarter 1	Quarter 2	Quarter 3	Quarter 4
hydrogen-3	Ci	3.95E+00	4.47E+00	1.01E+01	8.94E+00

Attachment 2
Effluent and Waste Disposal Data

Table 1C: Gaseous Effluents - Ground Level Releases
Continuous Release

Nuclides Released

1. FISSION GASES

	Unit	Quarter 1	Quarter 2	Quarter 3	Quarter 4
xenon-135	Ci	1.47E+00	1.38E+00	1.43E+00	1.76E+00

2. GASEOUS IODINES

	Unit	Quarter 1	Quarter 2	Quarter 3	Quarter 4
iodine-131	Ci	3.57E-04	2.67E-04	5.37E-05	6.23E-05
iodine-132	Ci	1.17E-03	4.69E-05	1.62E-04	≤LLD
iodine-133	Ci	2.29E-03	8.79E-04	4.55E-04	4.56E-04
iodine-134	Ci	≤ LLD	≤ LLD	≤ LLD	≤ LLD
iodine-135	Ci	1.02E-03	7.88E-05	≤ LLD	≤LLD
total for period	Ci	4.84E-03	1.27E-03	6.70E-04	5.18E-04

3. PARTICULATES

	Unit	Quarter 1	Quarter 2	Quarter 3	Quarter 4
chromium-51	Ci	7.58E-05	1.32E-05	≤LLD	6.53E-06
manganese-54	Ci	3.35E-05	4.08E-06	≤LLD	≤LLD
cobalt-58	Ci	1.54E-04	5.23E-05	6.84E-08	≤LLD
cobalt-60	Ci	1.79E-04	4.12E-05	2.17E-05	1.80E-05
zinc-65	Ci	2.80E-05	3.65E-06	≤LLD	≤LLD
strontium-89	Ci	6.22E-06	3.51E-06	1.08E-06	≤LLD
strontium-90	Ci	2.77E-07	≤LLD	≤LLD	≤LLD
barium-140	Ci	3.79E-05	2.18E-05	≤LLD	≤LLD
lanthanum-140	Ci	6.07E-05	1.26E-05	≤ LLD	≤LLD
total for period	Ci	5.75E-04	1.52E-04	2.29E-05	2.45E-05

4. TRITIUM

	Unit	Quarter 1	Quarter 2	Quarter 3	Quarter 4
hydrogen-3	Ci	3.12E+01	1.13E+01	1.31E+01	1.18E+01

Attachment 2
Effluent and Waste Disposal Data

Table 1D: Gaseous Effluents - Ground Level Releases For Burning Contaminated Oil

Nuclides Released

1. PARTICULATES

	Unit	Quarter 1	Quarter 2	Quarter 3	Quarter 4
No releases made	Ci	0.00E+00	0.00E+00	0.00E+00	0.00E+00

Attachment 2
Effluent and Waste Disposal Data

Table 2A: Liquid Effluents - Summation of all Releases

A. FISSION AND ACTIVATION PRODUCTS (NOTE 1)

	Unit	Quarter 1	Quarter 2	Quarter 3	Quarter 4	Estimated Total Percent Error
1. Total release (excluding tritium, gases, and alpha)	Ci	3.04E-04	1.25E-04	1.28E-03	1.29E-04	4.00E+01
2. Average diluted concentration (NOTE 2)	µCi/ml	1.06E-10	2.71E-11	9.55E-10	9.47E-11	NA
3. Percent of applicable limit	%	5.12E-04	4.33E-04	1.66E-03	1.70E-04	NA

B. TRITIUM (NOTE 1)

	Unit	Quarter 1	Quarter 2	Quarter 3	Quarter 4	Estimated Total Percent Error
1. Total release	Ci	9.88E+00	1.31E+01	1.17E+01	2.57E+01	4.50E+01
2. Average diluted concentration (NOTE 2)	µCi/ml	3.47E-06	2.83E-06	8.72E-06	1.89E-05	NA
3. Percent of applicable limit	%	3.47E-01	2.83E-01	8.72E-01	1.89E+00	NA

C. DISSOLVED AND ENTRAINED GASES (NOTE 1)

	Unit	Quarter 1	Quarter 2	Quarter 3	Quarter 4	Estimated Total Percent Error
1. Total release	Ci	5.54E-05	1.20E-03	0.00E+00	0.00E+00	4.00E+01
2. Average diluted concentration (NOTE 2)	µCi/ml	1.94E-11	2.59E-10	0.00E+00	0.00E+00	NA
3. Percent of applicable limit	%	9.71E-06	1.30E-04	0.00E+00	0.00E+00	NA

D. GROSS ALPHA RADIOACTIVITY

	Unit	Quarter 1	Quarter 2	Quarter 3	Quarter 4	Estimated Total Percent Error
1. Total release	Ci	≤ LLD	≤ LLD	≤ LLD	≤ LLD	4.00E+01

NOTE 1: Includes radionuclides released via abnormal and/or non-routine releases
NOTE 2: Does not include rainwater (i.e. Storm Drain Collection Basin and/or Storm Drain Collection Pond)

Attachment 2
Effluent and Waste Disposal Data

Table 2A: Liquid Effluents - Summation of all Releases

E. VOLUME OF WASTE RELEASED (NOTE 2)

	Unit	Quarter 1	Quarter 2	Quarter 3	Quarter 4	Estimated Total Percent Error
1. Total volume	liters	4.15E+05	6.76E+05	1.07E+05	1.67E+05	1.50E+01

F. VOLUME OF DILUTION WATER

	Unit	Quarter 1	Quarter 2	Quarter 3	Quarter 4	Estimated Total Percent Error
1. Total volume (used during release for average diluted concentration)	liters	2.85E+09	4.63E+09	1.34E+09	1.36E+09	1.50E+01

G. VOLUME OF COOLING WATER DISCHARGED FROM PLANT

	Unit	Quarter 1	Quarter 2	Quarter 3	Quarter 4	Estimated Total Percent Error
1. Total volume	liters	3.56E+11	4.81E+11	5.16E+11	4.52E+11	1.50E+01

NOTE 1: Includes radionuclides released via abnormal and/or non-routine releases
NOTE 2: Does not include rainwater (i.e. Storm Drain Collection Basin and/or Storm Drain Collection Pond)

Attachment 2
Effluent and Waste Disposal Data

Table 2B: Liquid Effluents - Batch Mode

Nuclides Released

1. FISSION AND ACTIVATION PRODUCTS

	Unit	Quarter 1	Quarter 2	Quarter 3	Quarter 4
magnesium-54	Ci	≤ LLD	≤ LLD	≤ LLD	2.39E-06
iron-55	Ci	8.75E-05	3.75E-05	3.62E-04	1.19E-05
cobalt-60	Ci	1.71E-04	6.96E-05	8.77E-04	8.80E-05
strontium-89	Ci	≤ LLD	≤ LLD	≤ LLD	≤ LLD
strontium-90	Ci	≤ LLD	≤ LLD	≤ LLD	≤ LLD
iodine-131	Ci	1.12E-05	3.56E-06	≤ LLD	≤ LLD
iodine-133	Ci	6.56E-06	≤ LLD	≤ LLD	≤ LLD
cesium-134	Ci	≤ LLD	≤ LLD	1.36E-06	≤ LLD
cesium-137	Ci	2.74E-05	1.45E-05	3.70E-05	2.68E-05
total for period	Ci	3.04E-04	1.25E-04	1.28E-03	1.29E-04

2. DISSOLVED AND ENTRAINED GASES

	Unit	Quarter 1	Quarter 2	Quarter 3	Quarter 4
xenon-133	Ci	1.14E-05	2.10E-04	≤ LLD	≤ LLD
xenon-135	Ci	4.40E-05	9.89E-04	≤ LLD	≤ LLD
total for period	Ci	5.54E-05	1.20E-03	0.00E+00	0.00E+00

Attachment 2
Effluent and Waste Disposal Data

Lower Limits of Detection

Units: μCi/ml

1. LIQUID RELEASES

Alpha	1.18E-08
Cr-51	1.64E-07
Mn-54	1.99E-08
Fe-55	2.86E-08
Co-58	2.05E-08
Fe-59	2.38E-08
Co-60	2.96E-08
Zn-65	3.91E-08
Sr-89	4.62E-08
Sr-90	3.62E-08
Mo-99	1.33E-07
I-131	1.98E-08
I-133	2.03E-08
I-135	9.40E-08
Cs-134	2.01E-08
Cs-137	2.30E-08
Ba-140	6.25E-08
La-140	3.68E-08
Ce-141	2.48E-08
Ce-144	1.25E-07
Kr-87	4.35E-08
Kr-88	6.61E-08
Xe-133	3.27E-08
Xe-133m	1.59E-07
Xe-135	1.44E-08
Xe-135m	8.43E-08
Xe-138	1.71E-07

2. GASEOUS RELEASES

Kr-85m	6.16E-09
Kr-87	1.42E-08
Kr-88	1.69E-08
Xe-133	1.27E-08
Xe-133m	3.66E-08
Xe-135	5.03E-09
Xe-135m	2.23E-08
Xe-137	6.01E-07
Xe-138	3.90E-08

3. IODINES AND PARTICULATES

Alpha	1.53E-15
Cr-51	5.35E-13
Mn-54	1.14E-14
Co-58	6.40E-14
Fe-59	1.57E-13
Co-60	8.75E-14
Zn-65	9.54E-14
Sr-89	2.62E-15
Sr-90	1.30E-15
Mo-99	6.74E-13
I-131	7.87E-14
Cs-134	7.35E-14
Cs-137	4.10E-14
Ba-140	1.46E-13
La-140	1.36E-13
Ce-141	8.62E-14
Ce-144	3.94E-13

NOTES:

1. The above values represent typical "a priori" LLDs for isotopes where values of "≤LLD" are indicated in Tables 1A, 1B, 1C, 2A, and 2B. Also included are isotopes specified in ODCMS 7.3.3 and 7.3.7.

2. Where activity for any nuclide is reported as "Less than LLD," that nuclide is considered not present and the LLD activity listed is not considered in the summary data.

Attachment 2
Effluent and Waste Disposal Data

Table 3A: Solid Waste and Irradiated Fuel Shipments – Waste Class A

Waste Class A

1. Total volume shipped (cubic meters) 6.93E+02

   Total curie quantity (estimated) 7.30E+01

2. Type of Waste

	Unit	Period	Estimated Total %Error
a. Spent resins, filter, sludges	$meter^3$	1.16E+02	
	Curies	7.03E+01	1.00E+01
b. Dry active waste, compacted/non-compacted	$meter^3$	5.77E+02	
	Curies	2.68E+00	1.00E+01
c. Irradiated components	$meters^3$	0.00E+00	
	Curies	0.00E+00	N/A
d. Others (describe)	$meters^3$	0.00E+00	
	Curies	0.00E+00	N/A

3. Estimate of major radionuclides composition

   a.

C-14	2.15E+00 %
Mn-54	2.24E+00 %
Fe-55	9.25E+00 %
Co-58	6.90E-01 %
Co-60	6.62E+01 %
Ni-63	1.14E+01 %
Cs-137	6.48E+00 %

   b.

Cr-51	2.29E+00 %
Mn-54	1.33E+00 %
Fe-55	3.92E+01 %
Co-60	4.87E+01 %
Ni-63	3.60E+00 %
Cs-137	1.26E+00 %
Ce-144	2.88E+00 %

   c. N/A

   d. N/A

NOTE:

Solid Radioactive Waste listed above was shipped for processing to various waste processing services or directly shipped to a licensed disposal facility.

Table 3A: Solid Waste and Irradiated Fuel Shipments – Waste Class A

4. Cross reference table, waste stream, form, and container type

Stream	Form	Container Type Type A/Type B	No. of shipments
a. Resin/Filters	Dewatered & Solidified*	Type A or STP	2.50E+01
b. Dry active waste	Compacted/ Non-compacted	Type A or STP	1.70E+01
c. Irradiated components		N/A	N/A
d. Others (describe)		N/A	N/A

*Solidification agent or absorbent (e.g., cement, urea formaldehyde)

5. Shipment Disposition

a. Solid Waste

Number of Shipments	Mode of Transportation	Destination
1.00E+01	Highway	Oak Ridge, TN
1.90E+01	Highway	Envirocare of Utah
1.30E+01	Rail	Envirocare of Utah

b. Irradiated Fuel

Number of Shipments	Mode of Transportation	Destination
0	N/A	N/A

Attachment 2
Effluent and Waste Disposal Data

Table 3B: Solid Waste and Irradiated Fuel Shipments – Waste Class B

Waste Class B

1. Total volume shipped (cubic meters) 1.51E+01

   Total curie quantity (estimated) 3.94E+02

2. Type of Waste

	Unit	Period	Estimated Total %Error
a. Spent resins, filter, sludges	meter^3	1.51E+01	
	Curies	3.94E+02	1.00E+01
b. Dry active waste, compacted/non-compacted	meter^3	0.00E+00	
	Curies	0.00E+00	N/A
c. Irradiated components	meters^3	0.00E+00	
	Curies	0.00E+00	N/A
d. Others (describe)	meters^3	0.00E+00	
	Curies	0.00E+00	N/A

3. Estimate of major radionuclides composition

   a.

Mn-54	2.92E+00 %
Fe-55	3.21E+01 %
Co-58	1.42E+00 %
Co-60	4.98E+01 %
Ni-63	5.69E+00 %
Zn-65	1.90E+00 %
Cs-137	4.53E+00 %

   b. N/A

   c. N/A

   d. N/A

NOTE:

Solid Radioactive Waste was shipped either directly for disposal or to a waste processor for processing and then transported for disposal by the processor.

Table 3B: Solid Waste and Irradiated Fuel Shipments – Waste Class B

4. Cross reference table, waste stream, form, and container type

Stream	Form	Container Type Type A/Type B	No. of shipments
a. Resin/Filters	Dewatered & Solidified*	Type B	4.00E+00
b. Dry active waste	Compacted/ Non-compacted	N/A	N/A
c. Irradiated components		N/A	N/A
d. Others (describe)		N/A	N/A

*Solidification agent or absorbent (e.g., cement, urea formaldehyde)

5. Shipment Disposition

a. Solid Waste

Number of Shipments	Mode of Transportation	Destination
4.00E+00	Highway	Erwin, TN

b. Irradiated Fuel

Number of Shipments	Mode of Transportation	Destination
0	N/A	N/A

Attachment 2
Effluent and Waste Disposal Data

Table 3C: Solid Waste and Irradiated Fuel Shipments – Waste Class C

Waste Class C

1. Total volume shipped (cubic meters) 1.90E+00

   Total curie quantity (estimated) 2.99E+01

2. Type of Waste

	Unit	Period	Estimated Total %Error
a. Spent resins, filter, sludges	$meter^3$	1.90E+00	
	Curies	2.99E+01	1.00E+01
b. Dry active waste, compacted/non-compacted	$meter^3$	0.00E+00	
	Curies	0.00E+00	N/A
c. Irradiated components	$meters^3$	0.00E+00	
	Curies	0.00E+00	N/A
d. Others (describe)	$meters^3$	0.00E+00	
	Curies	0.00E+00	N/A

3. Estimate of major radionuclides composition

   a. Fe-55 3.81E+01 %
      Co-60 4.55E+01 %
      Ni-63 1.56E+01 %

   b. N/A

   c. N/A

   d. N/A

NOTE:

Solid Radioactive Waste was shipped either directly for disposal or to a waste processor for processing and then transported for disposal by the processor.

Table 3C: Solid Waste and Irradiated Fuel Shipments – Waste Class C

4. Cross reference table, waste stream, form, and container type

Stream	Form	Container Type Type A/Type B	No. of shipments
a. Resin/Filters	Dewatered & Solidified*	Type B	1.00E+00
b. Dry active waste	Compacted/ Non-compacted	N/A	N/A
c. Irradiated components		N/A	N/A
d. Others (describe)		N/A	N/A

*Solidification agent or absorbent (e.g., cement, urea formaldehyde)

5. Shipment Disposition

a. Solid Waste

Number of Shipments	Mode of Transportation	Destination
1.00E+00	Highway	Barnwell, SC

b. Irradiated Fuel

Number of Shipments	Mode of Transportation	Destination
8.00E+00	Rail	New Hill, NC

Attachment 2
Effluent and Waste Disposal Data

Combustion of Waste Oil

No contaminated waste oil was incinerated during this report period.

Enclosure 1: Milk and Vegetable Sample Location

Enclosure 2: Land Use Census

Enclosure 1: Milk and Vegetable Sample Location

No milk animals are located in the area evaluated by the last Land Use Census, therefore, no milk sampling locations were available during this time period.

Vegetation sample locations remained unchanged.

Enclosure 2: Land Use Census

The 2003 Land Use Census did not identify any locations that are reportable in the Radioactive Effluent Release Report for 2003.

The following is a summary of the nearest resident and garden locations identified within five miles of the plant for each of the 16 meteorological sectors. No milk animals were found within five miles of the plant.

Direction	Residence	Garden
NNE	0.8 miles	None
NE	None	None
ENE	None	None
E	None	None
ESE	1.5 miles	None
SE	0.9 miles	None
SSE	1.0 miles	None
S	1.1 miles	1.1 miles
SSW	1.2 miles	1.9 miles
SW	1.0 miles	1.5 miles
WSW	1.2 miles	1.2 miles
W	0.8 miles	0.8 miles
WNW	0.8 miles	1.0 miles
NW	0.9 miles	4.8 miles
NNW	0.8 miles	4.4 miles
N	0.7 miles	1.0 miles

Attachment 4
Effluent Instrumentation

Enclosure 1: Radioactive Liquid Effluent Monitoring Instrumentation

Enclosure 2: Radioactive Gaseous Effluent Monitoring Instrumentation

Enclosure 3: Liquid Hold-Up Tank

Attachment 4
Effluent Instrumentation

Enclosure 1: Radioactive Liquid Effluent Monitoring Instrumentation

Although no Radioactive Liquid Effluent Monitoring Instruments were inoperable for a period of greater than 30 days, an event in March of the reporting period resulted in bypassing the monitoring instrumentation for the Storm Drain Stabilization Pond (SDSP). The effluent flow measurement device and composite sampler were bypassed during a breech of the pond dike. The event was documented in Nuclear Condition Report 88087. The analysis is as follows:

1. Event Description

During routine environmental duties on 3/19/03, an environmental technician identified a sink hole on the interior side of the Storm Drain Stabilization Pond (SDSP) dike. The SDSP water was flowing from the sink hole, under the dike, and into a drainage ditch that runs along the side of the intake canal road. The water in the ditch ultimately releases to a drainage pipe that travels under the road and into the intake canal. This pathway is not the normal designed release path for the SDSP.

2. Investigation Results

The SDSP is the holding and treatment system for the plant site's storm water runoff. The Storm Drain Collector Basin (SDCB) receives the site runoff and pumps the basin contents to the SDSP. The SDSP area originally was designed as a spoil pond and utilized during intake canal dredging. The construction of the stabilization pond was initiated in 1976 as part of a plant modification to the existing plant drainage system made necessary by EPA effluent limitation guidelines and standards requiring application of the "best practical control technology currently available (Reference IE Bulletin No. 80-10)." The SDSP utilizes surface area to evaporate, vegetation for filtration, and controlled releases to maintain the SDSP below a pre-determined level. Due to the recent dry weather conditions, the SDSP had not had a release since September 2001. The SDSP area is toured routinely by the environmental and chemistry group.

On 3/19/03 at 14:40, a sink hole was discovered on the interior side of the SDSP dike. Water samples were obtained from the SDSP and the ditch and analyzed in accordance with parameters in the Off-Site Dose Calculation Manual (ODCM). A controlled release began on 3/19/03 at 17:20 in accordance with 0E&RC-3291, Storm Drain Stabilization Pond, in an attempt to alleviate the leak rate at the sink hole. Additionally, programmatic measures were made to monitor the dike breech release to meet ODCM and National Pollution Discharge Elimination System (NPDES) requirements. The measures consisted of flow determinations at the release pipe and daily samples for activity (gamma isotopic and tritium). Notifications were made to the NRC and State to report the condition.

The sink hole was evaluated by site engineering support and an excavation vendor. On 3/27/03, excavation began on the interior dike area impacted by the sink hole. At a depth of approximately 7 feet, a 15" corrugated metal pipe was discovered. The pipe had completely degraded providing a path for the SDSP to drain. Additionally, the absence of the pipe prompted a sucking of the mud and dirt from under the dike resulting in a depression of the dike road. Further excavation determined that the pipe had been covered by cement to eliminate this drain path. Investigation into the SDSP design concluded that this pipe was actually a standpipe used during construction to keep the area drained while digging the 40 acre pond. The cement block was used to cap the drain path at the conclusion of the pond installation. It is evident that the metal pipe degraded over the years (initial pond drawings date 1973) and resulted in path for the pond to drain under the dike. Further

review of the pond drawings determined that 3 additional pipes used for draining during construction exist. The aforementioned pipe was removed, the dike area compacted, and covering placed over the soil to promote stability. The breech was stopped at 11:00 on 3/27/03. The release volume was calculated to be 3,813,843 gallons utilizing the methodology found in the ISCO Open Channel Flow Measurement Handbook - Fifth Edition.

Based on the compensatory measures taken during the event, the consequences of the release were minimal. The measures consisted of release rate determination, evaluation of interim repairs, timeliness of repairs, and sampling in accordance with the ODCM. Although evaluated, no interim repairs were made on the sink hole due to the potential for further degradation of the condition if repairs were attempted. The State requested samples for the release to be analyzed in accordance with the NPDES permit. The results of the release were within the requirements of the permit. Additionally, the release was monitored in accordance with the ODCM. The results denoted undiluted gamma isotopic results below the lower limit of detection and tritium at the average concentration of 3.10E-04 μCi/ml. The 3.67 curies of tritium released via this leak resulted in an estimated maximum dose to the individual of 1.34 E-05 mrem as calculated utilizing the methodology in the ODCM. The tritium concentration is a result of the storm drain system interface with the Turbine Building (TB) environment via the ventilation systems air wash design. The TB ventilation system recirculates approximately 90% of the air volume that ultimately results in concentrating any contaminates in the air. The air wash scrubs this air using water to remove the contaminants (and tritium) with the water then overflowing to the storm drain system. The air wash drains to the SDCB and is pumped to the SDSP. The tritium concentration is a result of steam leaks associated with a BWR operation. Short-lived fission products are also sent to the pond but tritium's 12.3 year half-life makes it the only isotope found during the actual releases from the SDSP. Although the SDSP is a permitted release point, the breech was outside the delineated pathway and will be reported to the NRC in the 2003 Annual Radioactive Effluent Release Report under the Effluent and Waste Disposal Annual Report supplemental information.

The remaining 3 standpipes used for draining the SDSP during construction remain a potential failure problem. Two of the pipes are located on the pond's northwest side that interfaces with Nancy's Creek. Nancy's Creek connects with Walden's Creek, Snow's Marsh and ultimately the Cape Fear River. Although the level of tritium released during the breech was at the limit for radioactivity in environmental samples (30,000 pCi/l – ODCM Table 7.3.15-2), the political consequences of releasing the pond contents to this pathway would dramatically increase. The remaining standpipes were removed in late May.

3. Inappropriate Actions

The design change from dredge processing to storing water did not adequately address the metal standpipes exposure to a corrosive environment. The transformation of the SDSP from spoil pond to stabilization pond occurred in the late 1970s. The standpipes used during construction were covered with a plug of cement. There was no specific monitoring program or actions taken to insure the integrity of these isolation plugs or the piping remained intact.

4. Contributing and Root Cause

1) The root cause of the SDSP breech is that the cement plug did not cover the entire pipe which permitted communication with the pond contents following pipe degradation. A standpipe used for draining the pond area during construction degraded over the years (initial pond drawings date 1973) and resulted in path for the pond to drain under the dike.

5. Previous Operating Experience (Internal and External)

The Brunswick site manages one pond for storm water management (SDSP). The remaining on-site pond facilities are spoil ponds used for canal dredging. The ponds are labeled 2, 2A, 4, and 6 and can be viewed on drawing F1037, sheet 2, revision 0. The 2 and 2A spoil ponds located near the biology lab on the intake canal road had a similar standpipe failure in 2002. Although additional standpipes exist in these ponds, repairs were only made on that specific breech. Due to the minimal consequences of this particular failure, no further actions were taken on this pond and breeches/repairs would be made when the conditions arise. Additional standpipe drain paths are added for management of spoil ponds. The standing water is drained periodically through these new paths to reduce the availability of surface area for insect breeding (mosquitoes). The SDSP operating design does not require use of these standpipes. The SDSP input is water not dredging spoil. Although numerous dike failures could be found in a variety of industrial applications, no OE was found for storm water ponds specifically containing tritium. The TB ventilation design and the interface with the storm drain system are very unique to BNP.

7. Generic Implications

The spoil ponds are the remaining ponds managed on the plant site. The standpipes were installed on these ponds as part of the pond management system. Additional pipes are added when further pond draining is needed. The difference between the spoil pond operation and the SDSP is that the standpipes and plugs in the spoil pond are continually covered by dredge spoil with the remaining surface water drained or evaporated. The SDSP pipes and plugs are continually exposed to water as part of the pond's design. The SDSP also processes radioactive water (specifically tritium contamination) and must be released in a controlled and monitored process in accordance with the ODCM. For the spoil ponds, the spill from standpipe failure were deemed minimal by management and the standpipes will be left in place until failure.

8. Safety Significance

The safety significance of the SDSP breech was minimal. The leak was discovered and repaired with no plant and or personnel safety implications. The significance of the event was dramatically reduced by the leak path being into the intake canal. This path is the permitted release path for the controlled release of the SDSP. The NPDES permit consequences were negligible due to the leak being determined to be equipment failure and not in violation of the permit requirements. Potential safety concerns may have been related to complete dike failure without prompt attention. The elimination of the remaining standpipes in the dike have increased the safety margin of the SDSP and further reduced its potential interface with inland waters.

Enclosure 2: Radioactive Gaseous Effluent Monitoring Instrumentation

No Radioactive Gaseous Effluent Monitoring Instruments were inoperable for a period of greater than 30 days.

Enclosure 3: Liquid Hold-Up Tank

No Liquid Hold-Up Tank exceeded the 10-Curie limit of ODCMS 7.3.6 during this reporting period.

Attachment 5

Major Modification To The Radioactive Waste Treatment Systems

In accordance with ODCMS 7.5.1, major changes to the liquid, gaseous, and solid Radioactive Waste Treatment Systems shall be reported to the NRC as part of the Radioactive Effluent Release Report or as part of the Updated Final Safety Analysis Report (UFSAR) update. Any major modifications to the radioactive waste treatment systems will be submitted with the UFSAR in accordance with 10 CFR 50.71(e).

Attachment 6

Meteorological Data

Per Technical Specification 5.6.3 and ODCMS 7.4.2, the annual summary of meteorological data collected over the calendar year has been retained in a file and is available for NRC review upon request.

Liquid Effluents [1]

Critical Age: Adult
Controlling location for liquid releases: SW sector at 0.1 miles

	(mrem)	Limit: (mrem)
GI-LLI	2.59E-04	2.00E+01
Bone	1.27E-04	2.00E+01
Liver	1.16E-04	2.00E+01
Lung	6.18E-05	2.00E+01
Total Body	6.13E-05	6.00E+00
Thyroid	2.24E-05	2.00E+01
Kidney	1.64E-05	2.00E+01

Gaseous Effluents [1]

Noble Gas: Critical Age: Infant
Controlling location: NE sector at 0.7 mile

	(mrad)	Limit: (mrad)
Gamma	3.71E-03	2.00E+01
Beta	1.62E-03	4.00E+01

Iodine, Particulates, and Tritium: Critical Age: Infant
Controlling location: NE sector at 4.75 mile
Assuming a cow milk pathway

	(mrem)	Limit: (mrem)
Thyroid	6.83E-02	3.00E+01
Kidney	1.14E-03	3.00E+01
Liver	1.11E-03	3.00E+01
Total Body	9.82E-04	3.00E+01
Skin	9.07E-04	3.00E+01
GI-LLI	9.03E-04	3.00E+01
Lung	8.91E-04	3.00E+01
Bone	2.60E-04	3.00E+01

[1] Reference – dose determined using site specific ODCM software

Off-Site Dose Calculation Manual (ODCM) And Process Control Program (PCP) Revisions

The PCP was not revised during the report period. ODCM Revision 27 was effective on March 21, 2003. An analysis of the six major changes is as follows:

ODCM Analysis:

1. **Updated the list of effective pages for Revision 27.**

The list of effective pages and revision bars denotes the method for tracking ODCM changes and to meet the intent for administrative controls in Technical Specifications 5.5.1.

2. **Adjusted gaseous section tables to reflect implementation of the Extended Power Uprate (EPUR) and the Alternate Source Term (AST) projects.**

The evaluation conducted during EPUR on the ratio of condensate demineralizer flow rate to steam flow rate led to a slight adjustment of GALE CODE parameters used for ODCM setpoint determination. The standard reference plant is a non-forward pump heater drain plant which requires BNP to determine the flow ratio. Taking these criteria, setpoints for the Stack, Turbine Building, Reactor Building, and AOG were adjusted. Although the differences were < 1.0 % of current values, the revision to the parameters are being made to meet the verbatim compliance criteria associated with ODCM methodology.

3. **Enhanced the bases for ODCM 7.3.7 for sampling during power changes greater than 15%, startup, and shutdowns.**

Interpretation of ODCM 7.3.7-1 following a downpower in November of 2002 for rod improvement resulted in entering 1/7 day sampling on the Stack and Unit 1 effluent pathways. AR 78077 was generated to document the condition and to address conflicting guidance in various implementing procedures. During the investigation, communications were made with the NRC, BNP Regulatory Affairs, Nuclear Reactor Regulation (NRR), and the Radiological Effluent Technical Specification/Radiological Environmental Monitoring Program (RETS/REMP) Steering Committee to determine the actual intent of the ODCM requirement. The resultant information is as follows:

1. The intent of the regulation was to evaluate particulate and iodine releases during plant transients. Additionally, if feasible, to determine if the noble gas release isotopic mix had changed based on the event.
2. The compensatory measures should only be entered during transients when the primary coolant DEI <u>and</u> the applicable noble gas monitor increase by a factor of 3.
3. The measures can be exited when the conditions return to pre-event levels.
4. Tritium analysis is not part of the required samples for this event.

These criteria were incorporated into the bases for the aforementioned ODCM requirement. Additionally, the noble gas activity will be monitored at the effluent pathway radiation monitor verses the main condenser air ejector. This point will more accurately reflect monitoring the effluent activity as noted in NUREG 1302.

4. **Revised environmental sample locations based on an initiative to verify all locations using a 12 channel GPS.**

Progress Energy environmental groups have been tasked with utilizing new technology to confirm the locations of all environment sample points. The minor changes to the original locations were made following independent checks using GPS equipment.

5. **Updated the definition for Rated Thermal Power (RTD) to reflect the Unit 2 power uprate.**

The definition states the appropriate power level following EPUR.

6. **Re-formatted miscellaneous tables to separate entries for better viewing.**

BSEP 04-0033
Enclosure 2

Offsite Dose Calculation Manual, Revision 27

BRUNSWICK STEAM ELECTRIC PLANT

OFF-SITE DOSE CALCULATION MANUAL

(ODCM)

REVISION 27

DOCKET NOS. 50-324
50-325

CAROLINA POWER & LIGHT COMPANY

Effective Date 3-21-03

Approved By: _____
PNSC

LIST OF EFFECTIVE PAGES
ODCM

NOTE: FOR ELECTRONIC USERS, revision levels as shown on this page are correct; footers that show Rev. 27 that are not reflected on this page are there due to limitations associated with the Word format in the electronic version.

Page(s)	Revision	Page(s)	Revision
I	27	7.3.3-3	27
ii - x	25	7.3.3-4 - 7.3.3-8	25
xi	27	7.3.4-1 - 7.3.4-2	25
1-1	26	7.3.5-1 - 7.3.5-2	25
2-1 - 2-9	25	7.3.6-1 - 7.3.6-2	25
2-10	27	7.3.7-1	25
2-11 - 2-15	25	7.3.7-2	27
3-1 - 3-10	25	7.3.7-3	25
3-11 - 3-12	27	7.3.7-4	27
3-13 - 3-14	25	7.3.7-5	25
3-15	27	7.3.8-1 - 7.3.8-2	25
3-16 - 3-23	25	7.3.9-1 - 7.3.9-2	25
3-24	26	7.3.10-1	25
3-25 - 3-29	25	7.3.11-1 - 7.3.11-2	25
3-30	27	7.3.12-1	25
3-31	26	7.3.13-1	25
3-32 - 3-66	25	7.3.14-1 - 7.3.14-3	25
4-1 - 4-2	25	7.3.15-1 - 7.3.15-6	25
4-3	26	7.3.15-7 - 7.3.15-8	26
4-4 - 4-9	27	7.3.15-9 - 7.3.15-10	25
4-10	26	7.3.15-11	26
5-1	25	7.3.15-12 - 7.3.15-13	25
5-2 - 5-3	26	7.3.15-14	26
6-1 - 6-4	25	7.3.16-1 - 7.3.16-4	25
7-0	25	7.3.17-1	25
7-i - 7-iv	25	7.4.0-1 - 7.4.0-3	25
7.1.1-1 - 7.1.1-2	25	7.5.0-1	25
7.1.1-3	27	B 7.3.0-1 - B 7.3.0-10	25
7.1.1-4 - 7.1.1-5	25	B 7.3.1-1	25
7.1.2-1 - 7.1.2-3	25	B 7.3.2-1 - B 7.3.2-2	25
7.1.3-1 - 7.1.3-12	25	B 7.3.3 -1 - B 7.3.6-1	25
7.1.4-1 - 7.1.4-5	25	B 7.3.7-1	27
7.2.0-1	25	B 7.3.8 -1 - B 7.3.17-1	25
7.3.0-1 - 7.3.0-4	25	A-1 - A-28	25
7.3.1-1 - 7.3.1-4	25	B-1 - B-36	25
7.3.1-5	26	C-1 - C-16	25
7.3.1-6	25	D-1	25
7.3.1-7	27	E-1 - E-3	25
7.3.2-1 - 7.3.2-6	25	F-1	25
7.3.2-7	26	F-2 - F-3	26
7.3.2-8	25	G-1	25
7.3.2-9 - 7.3.2-12	27	H-1 - H-3	25
7.3.3-1 - 7.3.3-2	25	H-4	26
		H-5	25

LIST OF FIGURES

No.	Title	Page
4.0-1a	BSEP Sample Point Locations	4-10
7.1.1-1	Site Boundary	7.1.1-5
F-1	Liquid Radwaste Effluent System	F-2
F-2	Gaseous Radwaste Effluent System	F-3

TABLE OF CONTENTS

Section	Title	Page
SECTION 1	INTRODUCTION	
INTRODUCTION		1-1
SECTION 2	LIQUID EFFLUENTS	
INDEX TO SECTION 2		2-1
2.1	COMPLIANCE WITH 10CFR PART 20 (LIQUIDS)	2-3
2.2	COMPLIANCE WITH 10CFR PART 50 (LIQUIDS)	2-11
SECTION 3	GASEOUS EFFLUENTS	
INDEX TO SECTION 3		3-1
3.1	MONITOR ALARM SETPOINT DETERMINATION	3-4
3.2	COMPLIANCE WITH 10CFR20 (GASEOUS)	3-17
3.3	COMPLIANCE WITH 10CFR50 (GASEOUS)	3-35
SECTION 4	RADIOLOGICAL ENVIRONMENTAL PROGRAM	
INDEX TO SECTION 4		4-1
SECTION 5	INTERLABORATORY COMPARISON STUDIES	
INDEX TO SECTION 5		5-1
5.1	OBJECTIVE	5-2
5.2	PROGRAM	5-2
SECTION 6	TOTAL DOSE (40CFR190) COMPLIANCE	
INDEX TO SECTION 6		6-1
6.1	INTRODUCTION	6-2
6.2	GENERAL	6-2
6.3	CALCULATIONS OF TOTAL BODY DOSE	6-3
6.4	THYROID DOSE	6-4
SECTION 7	OFFSITE DOSE CALCULATION MANUAL SPECIFICATIONS AND BASES	
INDEX TO SECTION 7		7-i
7.1	USE AND APPLICATION	7.1.1-1
7.2	NOT USED	7.2.0-1
7.3	OFFSITE DOSE CALCULATION MANUAL SPECIFICATION (ODCMS) AND TEST REQUIREMENT (TR) APPLICABILITY	7.3.0-1

TABLE OF CONTENTS

Section	Title	Page
7.4	REPORTING REQUIREMENTS	7.4.0-1
7.5	MAJOR CHANGES TO RADIOACTIVE WASTE TREATMENT SYSTEMS	7.5.0-1
B 7.3	BASES	B 7.3.0-1
APPENDIX A	METEOROLOGICAL DISPERSION FACTOR COMPUTATIONS	A-3
APPENDIX B	CALCULATIONS OF Vi AND Bi VALUES FOR THE ELEVATED PLUME	B-4
APPENDIX C	DOSE PARAMETERS FOR RADIOIODINES, PARTICULATES AND TRITIUM	C-2
APPENDIX D	LOWER LIMIT OF DETECTION (LLD)	D-1
APPENDIX E	RADIOACTIVE LIQUID AND GASEOUS EFFLUENT MONITORING INSTRUMENTATION NUMBERS	E-1
APPENDIX F	LIQUID AND GASEOUS EFFLUENT SYSTEM DIAGRAMS	F-1
APPENDIX G	ODCM SOFTWARE PACKAGE	G-1
APPENDIX H	METHODOLOGY AND CALCULATIONS FOR BURNING WASTE OIL	H-1

LIST OF TABLES

No.	Title	Page
SECTION 2		
2.1-1	ECs FOR SELECTED RADIONUCLIDES	2-10
2.2-1	A_{it} VALUES FOR THE ADULT	2-13
SECTION 3		
3.1-1	GASEOUS SOURCE TERMS	3-15
3.1-2	DOSE FACTORS AND CONSTANTS	3-16
3.2-1	RELEASES FROM BRUNSWICK STEAM ELECTRIC PLANT	3-30
3.2-2	DISTANCE TO CONTROLLING LOCATIONS AS MEASURED FROM THE BRUNSWICK PLANT CENTER	3-31
3.2-3	DISTANCE TO SITE BOUNDARIES BASED UPON BRUNSWICK PLANT CENTER AND DIRECTION FROM THE STACK	3-32
3.2-4	DOSE FACTORS FOR NOBLE GASES AND DAUGHTERS	3-33
3.2-5	P, VALUES FOR AN INFANT FOR THE BRUNSWICK STEAM ELECTRIC PLANT	3-34
3.3-1 THRU 3.3-19	R VALUES FOR THE BRUNSWICK STEAM ELECTRIC PLANT	3-48
SECTION 4		
4.0-1	RADIOLOGICAL ENVIRONMENTAL MONITORING PROGRAM	4-4
SECTION 7		
7.3.1-1	RADIOACTIVE LIQUID EFFLUENT MONITORING INSTRUMENTATION	7.3.1-7
7.3.2-1	RADIOACTIVE GASEOUS EFFLUENT MONITORING INSTRUMENTATION	7.3.2-9

LIST OF TABLES

No.	Title	Page
SECTION 7 (Cont'd)		
7.3.3-1	RADIOACTIVE LIQUID WASTE SAMPLING AND ANALYSIS PROGRAM	7.3.3-3
7.3.3-2	RADIOACTIVE LIQUID WASTE SAMPLING AND ANALYSIS PROGRAM FOR POTENTIAL RELEASE PATHWAYS WHICH HAVE EXCEEDED TRIGGER LEVELS	7.3.3-6
7.3.7-1	RADIOACTIVE GASEOUS WASTE SAMPLING AND ANALYSIS PROGRAM	7.3.7-2
7.3.15-1	RADIOLOGICAL ENVIRONMENTAL MONITORING PROGRAM	7.3.15-6
7.3.15-2	LIMITS FOR THE LEVEL OF RADIOACTIVITY IN ENVIRONMENTAL SAMPLES	7.3.15-11
7.3.15-3	DETECTION CAPABILITIES FOR ENVIRONMENTAL SAMPLE ANALYSIS	7.3.15-12
APPENDIX A		
A-1	X/Q VALUES AT THE SPECIAL LOCATIONS FOR RELEASES FROM THE TURBINE BUILDINGS	A-5
A-2	DEPLETED X/Q VALUES AT THE SPECIAL LOCATIONS FOR RELEASES FROM THE TURBINE BUILDINGS	A-6
A-3	D/Q VALUES AT THE SPECIAL LOCATIONS FOR RELEASES FROM THE TURBINE BUILDINGS	A-7
A-4	X/Q VALUES AT THE STANDARD DISTANCES FOR RELEASES FROM THE TURBINE BUILDINGS	A-8
A-5	DEPLETED X/Q VALUES AT THE STANDARD DISTANCES FOR RELEASES FROM THE TURBINE BUILDINGS	A-9
A-6	D/Q VALUES AT THE STANDARD DISTANCES FOR RELEASES FROM THE TURBINE BUILDINGS	A-10

LIST OF TABLES

No.	Title	Page
APPENDIX A (Cont'd)		
A-7	X/Q VALUES AT THE SPECIAL LOCATIONS FOR RELEASES FROM THE REACTOR BUILDINGS	A-11
A-8	DEPLETED X/Q VALUES AT THE SPECIAL LOCATIONS FOR RELEASES FROM THE REACTOR BUILDINGS	A-12
A-9	D/Q VALUES AT THE SPECIAL LOCATIONS FOR RELEASES FROM THE REACTOR BUILDINGS	A-13
A-10	X/Q VALUES AT THE STANDARD DISTANCES FOR RELEASES FROM THE REACTOR BUILDINGS	A-14
A-11	DEPLETED X/Q VALUES AT THE STANDARD DISTANCES FOR RELEASES FROM THE REACTOR BUILDINGS	A-15
A-12	D/Q VALUES AT THE STANDARD DISTANCES FOR RELEASES FROM THE REACTOR BUILDINGS	A-16
A-13	X/Q VALUES AT THE SPECIAL LOCATIONS FOR RELEASES FROM THE STACK	A-17
A-14	DEPLETED X/Q VALUES AT THE SPECIAL LOCATIONS FOR RELEASES FROM THE STACK	A-18
A-15	D/Q VALUES AT THE SPECIAL LOCATIONS FOR RELEASES FROM THE STACK	A-19
A-16	X/Q VALUES AT THE STANDARD DISTANCES FOR RELEASES FROM THE STACK	A-20
A-17	DEPLETED X/Q VALUES AT THE STANDARD DISTANCES FOR RELEASES FROM THE STACK	A-21
A-18	D/Q VALUES AT THE STANDARD DISTANCES FOR RELEASES FROM THE STACK	A-22
A-19	BRUNSWICK PLANT SITE INFORMATION TO BE USED FOR GROUND LEVEL CALCULATIONS WITH NRC "XOQDOQ" PROGRAM	A-23

LIST OF TABLES

No.	Title	Page
APPENDIX A (Cont'd)		
A-20	BRUNSWICK PLANT SITE INFORMATION TO BE USED FOR ELEVATED RELEASE CALCULATIONS WITH NRC "XOQDOQ" PROGRAM	A-26
APPENDIX B		
B-1	DOSE PARAMETERS FOR FINITE ELEVATED PLUMES ENE SITE BOUNDARY	B-5
B-2	JOINT FREQUENCY DISTRIBUTION FOR ENE SECTOR (%) PERIOD 1-1-77 THROUGH 12-31-77, BRUNSWICK STEAM ELECTRIC PLANT	B-6
B-3	DOSE PARAMETERS FOR FINITE ELEVATED PLUMES N SITE BOUNDARY	B-7
B-4	JOINT FREQUENCY DISTRIBUTION FOR N SECTOR (%) PERIOD 1-1-77 THROUGH 12-31-77, BRUNSWICK STEAM ELECTRIC PLANT	B-8
B-5	DOSE PARAMETERS FOR FINITE ELEVATED PLUMES NNE SITE BOUNDARY	B-9
B-6	JOINT FREQUENCY DISTRIBUTION FOR THE NNE SECTOR (%)PERIOD 1-1-77 THROUGH 12-31-77, BRUNSWICK STEAM ELECTRIC PLANT	B-10
B-7	DOSE PARAMETERS FOR FINITE ELEVATED PLUMES NE SITE BOUNDARY	B-11
B-8	JOINT FREQUENCY DISTRIBUTION FOR NE SECTOR (%) PERIOD 1-1-77 THROUGH 12-31-77, BRUNSWICK STEAM ELECTRIC PLANT	B-12
B-9	DOSE PARAMETERS FOR FINITE ELEVATED PLUMES E SITE BOUNDARY	B-13
B-10	JOINT FREQUENCY DISTRIBUTION FOR E SECTOR (%) PERIOD 1-1-77 THROUGH 12-31-77, BRUNSWICK STEAM ELECTRIC PLANT	B-14

LIST OF TABLES

No.	Title	Page
APPENDIX B (Cont'd)		
B-11	DOSE PARAMETERS FOR FINITE ELEVATED PLUMES ESE SITE BOUNDARY	B-15
B-12	JOINT FREQUENCY DISTRIBUTION FOR ESE SECTOR (%) PERIOD 1-1-77 THROUGH 12-31-77, BRUNSWICK STEAM ELECTRIC PLANT	B-16
B-13	DOSE PARAMETERS FOR FINITE ELEVATED PLUMES SE SITE BOUNDARY	B-17
B-14	JOINT FREQUENCY DISTRIBUTION FOR SE SECTOR (%) PERIOD 1-1-77 THROUGH 12-31-77, BRUNSWICK STEAM ELECTRIC PLANT	B-18
B-15	DOSE PARAMETERS FOR FINITE ELEVATED PLUMES SSE SITE BOUNDARY	B-19
B-16	JOINT FREQUENCY DISTRIBUTION FOR SSE SECTOR (%) PERIOD 1-1-77 THROUGH 12-31-77, BRUNSWICK STEAM ELECTRIC PLANT	B-20
B-17	DOSE PARAMETERS FOR FINITE ELEVATED PLUMES S SITE BOUNDARY	B-21
B-18	JOINT FREQUENCY DISTRIBUTION FOR S SECTOR (%) PERIOD 1-1-77 THROUGH 12-31-77, BRUNSWICK STEAM ELECTRIC PLANT	B-22
B-19	DOSE PARAMETERS FOR FINITE ELEVATED PLUMES SSW SITE BOUNDARY	B-23
B-20	JOINT FREQUENCY DISTRIBUTION FOR SSW SECTOR (%) PERIOD 1-1-77 THROUGH 12-31-77, BRUNSWICK STEAM ELECTRIC PLANT	B-24
B-21	DOSE PARAMETERS FOR FINITE ELEVATED PLUMES SW SITE BOUNDARY	B-25
B-22	JOINT FREQUENCY DISTRIBUTION FOR SW SECTOR (%) PERIOD 1-1-77 THROUGH 12-31-77, BRUNSWICK STEAM ELECTRIC PLANT	B-26

LIST OF TABLES

No.	Title	Page
APPENDIX B (Cont'd)		
B-23	DOSE PARAMETERS FOR FINITE ELEVATED PLUMES WSW SITE BOUNDARY	B-27
B-24	JOINT FREQUENCY DISTRIBUTION FOR WSW SECTOR (%) PERIOD 1-1-77 THROUGH 12-31-77, BRUNSWICK STEAM ELECTRIC PLANT	B-28
B-25	DOSE PARAMETERS FOR FINITE ELEVATED PLUMES W SITE BOUNDARY	B-29
B-26	JOINT FREQUENCY DISTRIBUTION FOR W SECTOR (%) PERIOD 1-1-77 THROUGH 12-31-77, BRUNSWICK STEAM ELECTRIC PLANT	B-30
B-27	DOSE PARAMETERS FOR FINITE ELEVATED PLUMES WNW SITE BOUNDARY	B-31
B-28	JOINT FREQUENCY DISTRIBUTION FOR WNW SECTOR (%) PERIOD 1-1-77 THROUGH 12-31-77, BRUNSWICK STEAM ELECTRIC PLANT	B-32
B-29	DOSE PARAMETERS FOR FINITE ELEVATED PLUMES NW SITE BOUNDARY	B-33
B-30	JOINT FREQUENCY DISTRIBUTION FOR NW SECTOR (%) PERIOD 1-1-77 THROUGH 12-31-77, BRUNSWICK STEAM ELECTRIC PLANT	B-34
B-31	DOSE PARAMETERS FOR FINITE ELEVATED PLUMES NNW SITE BOUNDARY	B-35
B-32	JOINT FREQUENCY DISTRIBUTION FOR NNW SECTOR (%) PERIOD 1-1-77 THROUGH 12-31-77, BRUNSWICK STEAM ELECTRIC PLANT	B-36

LIST OF TABLES

No.	Title	Page
APPENDIX C		
C-1	PARAMETERS FOR COW AND GOAT MILK PATHWAYS	C-14
C-2	PARAMETERS FOR THE MEAT PATHWAY	C-15
C-3	PARAMETERS FOR THE VEGETABLE PATHWAY	C-16

LIST OF FIGURES

No.	Title	Page
4.0-1a	BSEP Sample Point Locations	4-10
4.0-1b	BSEP Sample Point Locations	4-11
7.1.1-1	Site Boundary	7.1.1-5
F-1	Liquid Radwaste Effluent System	F-2
F-2	Gaseous Radwaste Effluent System	F-3

INTRODUCTION

The Off-Site Dose Calculation Manual (ODCM) provides the information and methodologies to be used by the Brunswick Steam Electric Plant (BSEP) to show compliance with 10CFR20, 10CFR50.36a, Appendix I of 10CFR50, and 40CFR190 and to assure compliance with ODCM Specifications (ODCMS).

The ODCM is based on "Radiological Effluent Technical Specifications for BWR's" (NUREG 0473, Draft), "Preparation of Radiological Effluent Technical Specifications for Nuclear Power Plants" (NUREG 0133), and guidance from the United Stated Nuclear Regulatory Commission (NRC). Specific plant procedures for implementation of this manual are provided elsewhere. These procedures will be utilized to assure compliance with ODCMS and Test Requirements (TRs) provided in the Radioactive Effluents Control Program.

The ODCM has been prepared as generically as possible to minimize the need for future revisions. Any changes to the ODCM will be reviewed and approved as indicated in the Administrative Control section of the BSEP Technical Specifications.

The Radioactive Effluent Release Report prepared after January 1 of each year will include an assessment of the annual radiation doses to members of the public from radioactive liquid and gaseous effluents using the methodology in the ODCM for the report period. This report will be inclusive of the requirements outlined in the BSEP Technical Specifications and ODCM Specifications.

INDEX

2.0 LIQUID EFFLUENT 2-3
2.1 COMPLIANCE WITH 10CFR PART 20 (LIQUIDS) 2-3
2.1.1 Batch Releases 2-3
2.1.2 Continuous Releases 2-8
2.1.3 Stabilization Pond Releases 2-9

2.2 COMPLIANCE WITH 10CFR PART 50 (LIQUIDS) 2-11
2.2.1 Cumulation of Doses 2-11
2.2.2 Projection of Doses 2-12

LIST OF TABLES

Table No.	Title	Page
SECTION 2		
2.1-1	ECs FOR SELECTED RADIONUCLIDES	2-10
2.2-1	A_{it} VALUES FOR THE ADULT	2-13

2.0 LIQUID EFFLUENT

2.1 COMPLIANCE WITH 10CFR PART 20 (LIQUIDS)

2.1.1 Batch Releases

A batch release is the discharge of liquid waste of a discrete volume. Batch releases from the BSEP liquid radwaste system may occur from the waste sample tank, floor drain sample tank, detergent drain tank and the salt water tanks. The maximum release rate possible due to pump capacity is 200 GPM from all release tanks except the detergent drain tank, which has a maximum release rate of 50 GPM. All of the above liquid radwaste discharges go to the circulating water discharge canal. Circulating water leakage collected in the circulating water pits and low purity, low activity liquids are transferred to the salt water release tanks where they are recirculated, sampled, and released to the environment. For any batch release, if the radwaste monitor effluent is inoperable, then two independent samples are analyzed and must be within 15% of each other before the release is approved. The two samples may differ by more than 15% upon approval of the E&C Supervisor or equivalent. The maximum release rate is determined so that 10CFR Part 20 limits are not exceeded after dilution in the discharge canal.

The sampling and analysis frequency and the type of analysis required by the BSEP ODCM Specifications is given in Table 7.3.3-1. All applicable instrument numbers may be found in Appendix E.

1. Prerelease

The radioactive content of each batch release will be determined prior to release in accordance with Table 7.3.3-1 of the BSEP ODCM Specifications. Compliance with 10CFR Part 20 will be shown in the following manner:

a. Minimum acceptable dilution factor:

$$DF_o = \Sigma_i \left(\frac{C_i}{EC_i} \right) \qquad \text{(Eq. 2.1-1)}$$

Where:

DF_o = Minimum acceptable dilution factor determined from analysis of liquid effluent to be released

C_i = Concentration of radionuclide i in the batch to be released, μCi/ml

EC_i = Annual average effluent concentration limit of radionuclide i from Appendix B, Table 2, Column 2 of 10CFR20, μCi/ml.

$$DF_B = (10)\ (DF_o) \qquad \text{(Eq. 2.1-2)}$$

Where:

DF_B = Conservative dilution factor used by BSEP to calculate maximum release rate prior to release in order to assure compliance with 10CFR Part 20

10 = A factor of 10 less than 10CFR Part 20 limits as specified in Appendix B, Table 2, Column 2. This factor represents one layer of conservatism for all releases at BSEP

DF_o = Minimum acceptable dilution factor per Equation 2.1-1

b. Maximum release rate:

$$MRR = \frac{n-1(RPF_{cw}) + p-1\ (RPF_{sw})}{2\ (DF_B)} \qquad \text{(Eq. 2.1-3)}$$

Where:

MRR = Maximum release rate of the batch to be released, GPM

n = Number of operating circulating water pumps

p = Number of operating service water pumps

RPF_{cw} = Minimum rated pump flow of each circulating water pump

= 1.357 E5 GPM

RPF_{sw} = Rated pump flow of each service water pump

= 8 E3 GPM

2 = Engineering factor to prevent spurious alarms caused by deviations in the mixtures of radionuclides which affect the monitor response

DF_B = Minimum acceptable dilution factor (DF_o) made conservative by a factor of 10 per Equation 2.1-2

c. Monitor Alarm/Trip Setpoint:

Monitor alarm/trip setpoints are determined to ensure that the concentration of radionuclides in the liquid effluent released from the site to unrestricted areas does not exceed the limits specified in 10CFR Part 20, Appendix B, Table 2, Column 2, for radionuclides other than dissolved or entrained noble gases. An effluent concentration (EC) of 2 E-4 μCi/ml has been established for noble gases dissolved or entrained in liquid effluents, based on the assumption that Xenon-135 is the controlling radionuclide. (NUREG 0133)

$$SP = \frac{C_T (E_m) [(n-1)(RPF_{cw}) + (p-1)(RPF_{sw})]}{RR} + Bkg \qquad \text{(Eq. 2.1-4)}$$

Where:

SP = Monitor alarm/trip setpoint, cps

E_m = The monitor efficiency for the mixture of radionuclides in the liquid effluent prior to dilution, cps/μCi/ml

C_T = 3 E-7 μCi/ml; engineering factor to ensure that the final concentration for the mixture of radionuclides will be less than 10CFR Part 20 limits at unrestricted areas

n = Number of operating circulating water pumps

p = Number of operating service water pumps

RPF_{cw} = 1.357 E5 GPM

RPF_{sw} = 8 E3 GPM

RR = 200 GPM; maximum design release rate

Bkg = Background count rate due to internal contamination and the radiation levels in the area in which the monitor is installed when the detector sample chamber is filled with an uncontaminated fluid, cps

$$SP = \frac{3\text{ E-7 } (E_m) [(n-1)(1.357\text{ E5}) + (p-1)(8.0\text{ E3})]}{200} + Bkg \qquad \text{(Eq. 2.1-5)}$$

d. Calculated concentration at unrestricted area:

$$Conc_i = \frac{(C_i)(MRR)}{(n-1)(RPF_{cw}) + (p-1)(RPF_{sw})} \quad \text{(Eq. 2.1-6)}$$

Where:

$Conc_i$ = Calculated concentration of radionuclide i at the unrestricted area, µCi/ml

C_i = Concentration of radionuclide i in the batch to be released, µCi/ml

MRR = Maximum release rate of the batch to be released (see Equation 2.1-3), GPM

n = Number of operating circulating water pumps

p = Number of operating service water pumps

RPF_{cw} = 1.357 E5 GPM

RPF_{sw} = 8 E3 GPM

e. 10CFR Part 20 Prerelease Compliance Check:

Before initiating the batch release, one final check for compliance with 10CFR Part 20 will be performed. If the calculated dilution factor at the unrestricted area is less than or equal to 1, then 10CFR Part 20 limits have been met. The following equation must be true:

$$\Sigma_i (Conc_i/EC_i) \leq 1 \quad \text{(Eq. 2.1-7)}$$

Where:

$Conc_i$ = Concentration of radionuclide i at the unrestricted area per Equation 2.1-6, µCi/ml

EC_i = Annual average effluent concentration limit of radionuclide i from Appendix B, Table 2, Column 2 of 10CFR20, µCi/ml.

2. Postrelease

The actual concentration of each radionuclide following release from a batch tank will be calculated to show final compliance with 10CFR Part 20 as follows:

a. Actual concentration at unrestricted area:

$$Conc_{ik} = \frac{(C_i)\,(V_{eff})}{V_{dil}} \qquad \text{(Eq. 2.1-8)}$$

Where:

$Conc_{ik}$ = The actual concentration of radionuclide i at the unrestricted area during release k, μCi/ml

C_i = Concentration of radionuclide i in the batch released, μCi/ml

V_{eff} = Actual volume of liquid effluent released, gal

V_{dil} = Actual volume of dilution water during release k, gal

= $[n\,(RPF_{CW}) + p\,(RPF_{SW})]\,(t_k)$

Where:

n = Number of operating circulating water pumps

p = Number of operating service water pumps

RPF_{CW} = 1.357 E5 GPM

RPF_{SW} = 8 E3 GPM

t_k = Total release time, min

b. 10CFR Part 20 Postrelease Compliance Check:

To show final compliance with 10CFR Part 20, the following relationship must hold:

$$\Sigma_i\,(Conc_{ik}/EC_i) \leq 1 \qquad \text{(Eq. 2.1-9)}$$

Where:

$Conc_{ik}$ = The actual concentration of radionuclide i during release k (from Equation 2.1-8), μCi/ml

EC_i = Annual average effluent concentration limit of radionuclide i from Appendix B, Table 2, Column 2 of 10CFR20, μCi/ml.

2.1.2 Continuous Releases

A continuous release is the discharge of liquid wastes of a nondiscrete volume; e.g., from a volume or system that has an input flow during the continuous release. Planned continuous releases do not presently occur at BSEP, although the potential does exist in the service water system. Weekly tests are performed during system operation as specified in Table 7.3.3-1 of the BSEP ODCM Specifications. If a continuous release does occur, the concentration of various radionuclides in the unrestricted area would be calculated using Equation 2.1-8 with C_i being the concentration of radionuclide i in the continuous release stream. To show compliance with 10CFR Part 20, the sum of the concentration of radionuclide i in the unrestricted area due to both continuous and batch releases divided by that isotope's EC must again be less than 1.

1. Service Water Effluent Monitor Setpoint Determination

This procedure determines the monitor alarm setpoints that indicate the abnormal presence of radionuclides in the service water liquid effluents released from the site to unrestricted areas. This procedure is applicable to any service water effluent monitor.

a. Determine the monitor efficiency factor, EF, in

$$\frac{\mu Ci/ml}{cps}$$

$$EF = (E_m)(C_f) \qquad \text{(Eq. 2.1-10)}$$

Where:

E_m = The detector efficiency (dpm/ml/cps) from the appropriate RST

C_f = Conversion factor, (1 μCi/2.22 x 10^6 dpm)

b. Determine the monitor trigger level setpoint, TLS, in cps

$$TLS = TL/EF + Bkg \qquad \text{(Eq. 2.1-11)}$$

Where:

TL = The alarm trigger level (μCi/ml) as per ODCM TR 7.3.3.2

= 5.0 x 10^{-6} μCi/ml

Bkg = Monitor background, (cps)

2.1.3 Stabilization Pond Releases

Prerelease and post-release compliance checks similar to those of Section 2.1.1 may be performed for releases from the stabilization pond. Prerelease calculations will be based on a gamma isotopic assay of a grab sample prior to release. Post-release calculations will be based on a composite sample that is collected in proportion to flow during the release period (if possible). Dilution flow will be estimated from the minimum number of circulating water and service water pumps that were in use during the release period. Typical release times are on the order of days. (Note: Calculated doses as in Section 2.2 will be compiled along with those resulting from normal radwaste discharges.)

TABLE 2.1-1

ECs FOR SELECTED RADIONUCLIDES

Radionuclide	EC_i (µCi/ml)
H-3	1 E-3
Na-24	5 E-5
Cr-51	5 E-4
Mn-54	3 E-5
Co-58	2 E-5
Fe-59	1 E-5
Co-60	3 E-6
Cu-64	2 E-4
Zn-65	5 E-6
Zn-69m	6 E-5
Sr-89	8 E-6
Sr-90	5 E-7
Sr-91	2 E-5
Zr-95	2 E-5
Mo-99	2 E-5
I-131	1 E-6
I-132	1 E-4
I-133	7 E-6
Cs-134	9 E-7
I-134	4 E-4
I-135	3 E-5
Cs-137	1 E-6
La-141	5 E-5
Np-239	2 E-5
Am-241	2 E-8
Noble Gases	2 E-4

2.2 COMPLIANCE WITH 10CFR PART 50 (LIQUIDS)

2.2.1 Cumulation of Doses

ODCM TR 7.3.4.1 requires that the cumulative dose contributions from liquid effluents be determined at least once per 31 days, and a cumulative summation of these total body and any organ doses should be maintained for each calendar quarter. The cumulative dose contributions will consider the dose contributions from the maximum exposed individual's consumption of fish and invertebrates. At BSEP the adult is considered as the maximum exposed individual. The dose or dose commitment limits based on 10CFR Part 50, Appendix I, are defined in ODCM Specification 7.3.4 a and b. Since only batch releases occur at BSEP, the equations in the following sections pertain only to batch releases. The dose contribution for all batch releases for the quarter will be calculated using the following equation:

$$D_\tau = \sum_k \left[\sum_i \left(A_{i\tau}\ t_k\ C_{ik}\ F_k \right) \right] \qquad \text{(Eq. 2.2-1)}$$

Where:

D_τ = The cumulative dose commitment to the total body or any organ τ, from the liquid effluents releases, mrem

t_k = The length of time of release k over which C_{ik} and F_k are averaged for each liquid release, hours

C_{ik} = The concentration of radionuclide i in the undiluted liquid effluent during release k from any liquid release, μCi/ml

F_k = The near-field average dilution factor for C_{ik} during any liquid effluent release. It is defined as the ratio of the volume of undiluted liquid waste released to the product of the dilution volume from the site discharge to unrestricted receiving water times 1. (1 is the site-specific applicable factor for the mixing effect of the BSEP discharge structure as defined in NUREG 0133.)

$$= \frac{V_{eff}}{V_{dil}} \qquad \text{(See Equation 2.1-8).}$$

$A_{i\tau}$ = The ingestion dose commitment factor to the total body or any organ τ for each identified gamma and beta emitter i (as presented in Table 2.2-1). Values are for an adult, mrem-ml per hr-μCi

$$= 1.14\ E5\ (5\ BI_i + 21\ BF_i)\ DCF_{i\tau}$$

Where:

1.14 E5 = $\left(10^6 \frac{pCi}{\mu Ci}\right)\left(10^3 \frac{ml}{L}\right)\left(\frac{1yr}{8760\ hr}\right)$

5 = Maximum adult invertebrate consumption rate from Table E-5 of Regulatory Guide 1.109, Rev. 1, kg/yr

BI_i = Bioaccumulation factor for radionuclide i in invertebrates from Table A-1 of Regulatory Guide 1.109, Rev. 1, pCi/kg per pCi/L

21 = Maximum adult fish consumption rate from Table E-5 of Regulatory Guide 1.109, Rev. 1, kg/yr

BF_i = Bioaccumulation factor for radionuclide i in fish from Table A-1 of Regulatory Guide 1.109, Rev. 1, pCi/kg per pCi/L

$DCF_{i\tau}$ = Dose conversion factor for radionuclide i for adults for a particular organ τ from Table E-11 of Regulatory Guide 1.109, Rev. 1, and BSEP File: B10-10530, Letter to J. W. Davis, "Dose Factors for Hf-181 and Sn-113," May 24, 1988, and NUREG CR4653 for Am-241, mrem/pCi.

2.2.2 Projection of Doses

Dose projections for this section are required at least once per 31 days in ODCM TR 7.3.5.2.

The projection of doses for liquid effluents can be accomplished by projecting the dose(s) computed for the current month into the next month. The doses will be projected using Equation 2.2-1. Where possible, credit for expected operational evolutions (i.e., major planned liquid releases, etc.), can be taken in the dose projections. This may be accomplished by using the source-term data from similar historical operating experiences where practical.

TABLE 2.2-1
A_{it} VALUES FOR THE ADULT
(MREM/HR PER MICRO-CI/ML)

Note: Nuclides not listed in this table are assigned a value of zero.

Nuclide	Bone	Liver	T.Body	Thyroid	Kidney	Lung	GI-LLI
H 3	0.00E-01	2.82E-01	2.82E-01	2.82E-01	2.82E-01	2.82E-01	2.82E-01
C 14	1.45E 04	2.90E 03	2.90E 03	2.90E 03	2.90E 03	2.90E 03	2.90E 03
NA 24	4.57E-01	4.57E-01	4.57E-01	4.57E-01	4.57E-01	4.57E-01	4.57E-01
P 32	1.67E 07	1.04E 06	6.45E 05	0.00E-01	0.00E-01	0.00E-01	1.89E 06
CR 51	0.00E-01	0.00E-01	5.58E 00	3.34E 00	1.23E 00	7.40E 00	1.40E 03
MN 54	0.00E-01	7.06E 03	1.35E 03	0.00E-01	2.10E 03	0.00E-01	2.16E 04
MN 56	0.00E-01	1.78E 02	3.15E 01	0.00E-01	2.26E 02	0.00E-01	5.67E 03
FE 55	5.11E 04	3.53E 04	8.23E 03	0.00E-01	0.00E-01	1.97E 04	2.03E 04
FE 59	8.06E 04	1.90E 05	7.27E 04	0.00E-01	0.00E-01	5.30E 04	6.32E 05
CO 57	0.00E-01	1.42E 02	2.36E 02	0.00E-01	0.00E-01	0.00E-01	3.59E 03
CO 58	0.00E-01	6.03E 02	1.35E 03	0.00E-01	0.00E-01	0.00E-01	1.22E 04
CO 60	0.00E-01	1.73E 03	3.82E 03	0.00E-01	0.00E-01	0.00E-01	3.25E 04
NI 63	4.96E 04	3.44E 03	1.67E 03	0.00E-01	0.00E-01	0.00E-01	7.18E 02
NI 65	2.02E 02	2.62E 01	1.20E 01	0.00E-01	0.00E-01	0.00E-01	6.65E 02
CU 64	0.00E-01	2.14E 02	1.01E 02	0.00E-01	5.40E 02	0.00E-01	1.83E 04
ZN 65	1.61E 05	5.13E 05	2.32E 05	0.00E-01	3.43E 05	0.00E-01	3.23E 05
ZN 69	3.43E 02	6.56E 02	4.56E 01	0.00E-01	4.26E 02	0.00E-01	9.85E 01
BR 83	0.00E-01	0.00E-01	7.25E-02	0.00E-01	0.00E-01	0.00E-01	1.04E-01
BR 84	0.00E-01	0.00E-01	9.39E-02	0.00E-01	0.00E-01	0.00E-01	7.37E-07
BR 85	0.00E-01	0.00E-01	3.86E-03	0.00E-01	0.00E-01	0.00E-01	1.80E-18
RB 86	0.00E-01	6.24E 02	2.91E 02	0.00E-01	0.00E-01	0.00E-01	1.23E 02
RB 88	0.00E-01	1.79E 00	9.49E-01	0.00E-01	0.00E-01	0.00E-01	2.47E-11
RB 89	0.00E-01	1.19E 00	8.34E-01	0.00E-01	0.00E-01	0.00E-01	6.89E-14
SR 89	4.99E 03	0.00E-01	1.43E 02	0.00E-01	0.00E-01	0.00E-01	8.00E 02
SR 90	1.23E 05	0.00E-01	3.01E 04	0.00E-01	0.00E-01	0.00E-01	3.55E 03
SR 91	9.18E 01	0.00E-01	3.71E 00	0.00E-01	0.00E-01	0.00E-01	4.37E 02
SR 92	3.48E 01	0.00E-01	1.51E 00	0.00E-01	0.00E-01	0.00E-01	6.90E 02
Y 90	6.06E 00	0.00E-01	1.63E-01	0.00E-01	0.00E-01	0.00E-01	6.42E 04
Y 91M	5.73E-02	0.00E-01	2.22E-03	0.00E-01	0.00E-01	0.00E-01	1.68E-01
Y 91	8.88E 01	0.00E-01	2.37E 00	0.00E-01	0.00E-01	0.00E-01	4.89E 04
Y 92	5.32E-01	0.00E-01	1.56E-02	0.00E-01	0.00E-01	0.00E-01	9.32E 03
Y 93	1.69E 00	0.00E-01	4.66E-02	0.00E-01	0.00E-01	0.00E-01	5.35E 04

TABLE 2.2-1 (Cont'd)

Nuclide	Bone	Liver	T.Body	Thyroid	Kidney	Lung	GI-LLI
ZR 95	1.59E 01	5.11E 00	3.46E 00	0.00E-01	8.02E 00	0.00E-01	1.62E 04
ZR 97	8.81E-01	1.78E-01	8.13E-02	0.00E-01	2.68E-01	0.00E-01	5.51E 04
NB 95	4.47E 02	2.49E 02	1.34E 02	0.00E-01	2.46E 02	0.00E-01	1.51E 06
MO 99	0.00E-01	1.28E 02	2.43E 01	0.00E-01	2.89E 02	0.00E-01	2.96E 02
TC 99M	1.30E-02	3.66E-02	4.66E-01	0.00E-01	5.56E-01	1.79E-02	2.17E 01
TC 101	1.33E-02	1.92E-02	1.88E-01	0.00E-01	3.46E-01	9.81E-03	5.77E-14
RU 103	1.07E 02	0.00E-01	4.60E 01	0.00E-01	4.07E 02	0.00E-01	1.25E 04
RU 105	8.89E 00	0.00E-01	3.51E 00	0.00E-01	1.15E 02	0.00E-01	5.44E 03
RU 106	1.59E 03	0.00E-01	2.01E 02	0.00E-01	3.06E 03	0.00E-01	1.03E 05
AG 110M	1.56E 03	1.45E 03	8.60E 02	0.00E-01	2.85E 03	0.00E-01	5.91E 05
SN 113	2.18E 03	8.43E 01	2.05E 03	2.96E 01	6.16E 01	0.00E 01	3.80E 04
TE 125M	2.17E 02	7.86E 01	2.91E 01	6.52E 01	8.82E 02	0.00E-01	8.66E 02
TE 127M	5.48E 02	1.96E 02	6.68E 01	1.40E 02	2.23E 03	0.00E-01	1.84E 03
TE 127	8.90E 00	3.20E 00	1.93E 00	6.60E 00	3.63E 01	0.00E-01	7.03E 02
TE 129M	9.31E 02	3.47E 02	1.47E 02	3.20E 02	3.89E 03	0.00E-01	4.69E 03
TE 129	2.54E 00	9.55E-01	6.19E-01	1.95E 00	1.07E 01	0.00E-01	1.92E 00
TE 131M	1.40E 02	6.85E 01	5.71E 01	1.08E 02	6.94E 02	0.00E-01	6.80E 03
TE 131	1.59E 00	6.66E-01	5.03E-01	1.31E 00	6.99E 00	0.00E-01	2.26E-01
TE 132	2.04E 02	1.32E 02	1.24E 02	1.46E 02	1.27E 03	0.00E-01	6.24E 03
I 130	3.96E 01	1.17E 02	4.61E 01	9.91E 03	1.82E 02	0.00E-01	1.01E 02
I 131	2.18E 02	3.12E 02	1.79E 02	1.02E 05	5.35E 02	0.00E-01	8.23E 01
I 132	1.06E 01	2.85E 01	9.96E 00	9.96E 02	4.54E 01	0.00E-01	5.35E 00
I 133	7.45E 01	1.30E 02	3.95E 01	1.90E 04	2.26E 02	0.00E-01	1.16E 02
I 134	5.56E 00	1.51E 01	5.40E 00	2.62E 02	2.40E 01	0.00E-01	1.32E-02
I 135	2.32E 01	6.08E 01	2.24E 01	4.01E 03	9.75E 01	0.00E-01	6.87E 01
CS 134	6.84E 03	1.63E 04	1.33E 04	0.00E-01	5.27E 03	1.75E 03	2.85E 02
CS 136	7.16E 02	2.83E 03	2.04E 03	0.00E-01	1.57E 03	2.16E 02	3.21E 02
CS 137	8.77E 03	1.20E 04	7.85E 03	0.00E-01	4.07E 03	1.35E 03	2.32E 02
CS 138	6.07E 00	1.20E 01	5.94E 00	0.00E-01	8.81E 00	8.70E-01	5.12E-05
BA 139	7.85E 00	5.59E-03	2.30E-01	0.00E-01	5.23E-03	3.17E-03	1.39E 01
BA 140	1.64E 03	2.06E 00	1.08E 02	0.00E-01	7.02E-01	1.18E 00	3.38E 03
BA 141	3.81E 00	2.88E-03	1.29E-01	0.00E-01	2.68E-03	1.63E-03	1.80E-09
BA 142	1.72E 00	1.77E-03	1.08E-01	0.00E-01	1.50E-03	1.00E-03	2.43E-18
LA 140	1.57E 00	7.94E-01	2.10E-01	0.00E-01	0.00E-01	0.00E-01	5.83E 04

TABLE 2.2-1 (Cont'd)

Nuclide	Bone	Liver	T.Body	Thyroid	Kidney	Lung	GI-LLI
LA 142	8.06E-02	3.67E-02	9.13E-03	0.00E-01	0.00E-01	0.00E-01	2.68E 02
CE 141	3.43E 00	2.32E 00	2.63E-01	0.00E-01	1.08E 00	0.00E-01	8.86E 03
CE 143	6.04E-01	4.46E 02	4.94E-02	0.00E-01	1.97E-01	0.00E-01	1.67E 04
CE 144	1.79E 02	7.47E 01	9.59E 00	0.00E-01	4.43E 01	0.00E-01	6.04E 04
PR 143	5.79E 00	2.32E 00	2.87E-01	0.00E-01	1.34E 00	0.00E-01	2.54E 04
PR 144	1.90E-02	7.87E-03	9.64E-04	0.00E-01	4.44E-03	0.00E-01	2.73E-09
ND 147	3.96E 00	4.58E 00	2.74E-01	0.00E-01	2.68E 00	0.00E-01	2.20E 04
HF 181	1.72E 02	9.66E-01	1.94E 01	6.14E-01	8.08E-01	0.00E-01	1.27E 04
W 187	9.16E 00	7.66E 00	2.68E 00	0.00E-01	0.00E-01	0.00E-01	2.51E 03
NP 239	3.53E-02	3.47E-03	1.91E-03	0.00E-01	1.08E-02	0.00E-01	7.11E 02
AM 241	4.76E 05	4.44E 05	3.41E 04	0.00E-01	2.56E 05	0.00E 01	4.67E 04
F 18	6.66E 00	0.00E-01	7.38E-01	0.00E-01	0.00E-01	0.00E-01	1.97E-01
SB 124	2.76E 02	5.22E 00	1.09E 02	6.70E-01	0.00E-01	2.15E 02	7.84E 03

INDEX

3.0 GASEOUS EFFLUENTS 3-4
3.1 MONITOR ALARM SETPOINT DETERMINATION 3-4
3.1.1 Setpoint Based on Conservative Radionuclide Mix (Ground and Mixed Mode Releases) 3-4
3.1.2 Setpoint Based on Conservative Radionuclide Mix (Long-Term Elevated Release 3-7
3.1.3 Condenser Air Ejector Monitor Alarm Setpoint 3-10
3.1.4 Condenser Off-Gas Treatment System (AOG) Monitor Alarm Setpoint Determination 3-13

3.2 COMPLIANCE WITH 10CFR20 (GASEOUS) 3-17
3.2.1 Noble Gases 3-17
3.2.2 I-131, I-133, Particulates, and Tritium 3-23

3.3 COMPLIANCE WITH 10CFR50 (GASEOUS) 3-35
3.3.1 Noble Gases 3-35
3.3.2 I-131, I-133, Particulates, and Tritium 3-40

LIST OF TABLES

Table No.	Title	Page
SECTION 3		
3.1-1	GASEOUS SOURCE TERM	3-15
3.1-2	DOSE FACTORS AND CONSTANTS	3-16
3.2-1	RELEASES FROM BRUNSWICK STEAM ELECTRIC PLANT	3-30
3.2-2	DISTANCE TO CONTROLLING LOCATIONS AS MEASURED FROM THE BRUNSWICK PLANT CENTER	3-31
3.2-3	DISTANCE TO SITE BOUNDARIES BASED UPON BRUNSWICK PLANT CENTER AND DIRECTION FROM THE STACK	3-32
3.2-4	DOSE FACTORS FOR NOBLE GASES AND DAUGHTERS	3-33
3.2-5	P_i VALUES FOR AN INFANT FOR THE BRUNSWICK STEAM ELECTRIC PLANT	3-34
3.3-1	R VALUES FOR BRUNSWICK STEAM ELECTRIC PLANT - GROUND	3-48
3.3-2	R VALUES FOR BRUNSWICK STEAM ELECTRIC PLANT - VEGETABLE/ADULT	3-49
3.3-3	R VALUES FOR BRUNSWICK STEAM ELECTRIC PLANT - VEGETABLE/TEEN	3-50
3.3-4	R VALUES FOR BRUNSWICK STEAM ELECTRIC PLANT - VEGETABLE/CHILD	3-51
3.3-5	R VALUES FOR BRUNSWICK STEAM ELECTRIC PLANT - MEAT/ADULT	3-52
3.3-6	R VALUES FOR BRUNSWICK STEAM ELECTRIC PLANT - MEAT/TEEN	3-53
3.3-7	R VALUES FOR BRUNSWICK STEAM ELECTRIC PLANT - MEAT/CHILD	3-54
3.3-8	R VALUES FOR BRUNSWICK STEAM ELECTRIC PLANT - COW MILK/ADULT	3-55

LIST OF TABLES

Table No.	Title	Page
3.3-9	R VALUES FOR BRUNSWICK STEAM ELECTRIC PLANT - COW MILK/TEEN	3-56
3.3-10	R VALUES FOR BRUNSWICK STEAM ELECTRIC PLANT - COW MILK/CHILD	3-57
3.3-11	R VALUES FOR BRUNSWICK STEAM ELECTRIC PLANT - COW MILK/INFANT	3-58
3.3-12	R VALUES FOR BRUNSWICK STEAM ELECTRIC PLANT - GOAT MILK/ADULT	3-59
3.3-13	R VALUES FOR BRUNSWICK STEAM ELECTRIC PLANT - GOAT MILK/TEEN	3-60
3.3-14	R VALUES FOR BRUNSWICK STEAM ELECTRIC PLANT - GOAT MILK/CHILD	3-61
3.3-15	R VALUES FOR BRUNSWICK STEAM ELECTRIC PLANT - GOAT MILK/INFANT	3-62
3.3-16	R VALUES FOR BRUNSWICK STEAM ELECTRIC PLANT - INHALATION/ADULT	3-63
3.3-17	R VALUES FOR BRUNSWICK STEAM ELECTRIC PLANT - INHALATION/TEEN	3-64
3.3-18	R VALUES FOR BRUNSWICK STEAM ELECTRIC PLANT - INHALATION/CHILD	3-65
3.3-19	R VALUES FOR BRUNSWICK STEAM ELECTRIC PLANT - INHALATION/INFANT	3-66

3.0 GASEOUS EFFLUENTS

3.1 MONITOR ALARM SETPOINT DETERMINATION

This procedure determines the monitor alarm setpoint that indicates if the dose rate in the unrestricted areas due to noble gas radionuclides in the gaseous effluent released from the site to areas at and beyond the site boundary exceeds 500 mrem/year to the whole body or exceeds 3000 mrem/year to the skin. (NUREG-0133)

3.1.1 Setpoint Based on Conservative Radionuclide Mix (Ground and Mixed Mode Releases)

The following method applies to gaseous releases via the Units 1 and 2 Turbine Building Vents and via the Units 1 and 2 Reactor Building Vents when determining the high alarm setpoint for the Turbine Building Vent Gas Monitors and Reactor Building Vent Gas Monitors.

1. Determine the "mix" (noble gas radionuclide composition) of the gaseous effluent (the "mix" can be determined from actual data or by using GALE code results of Table 3.1-1):*

   a. Determine the gaseous source terms that are representative of the "mix" of the gaseous effluent. Gaseous source terms are the noble gas activities in the effluent.

      Gaseous source terms can be obtained from:

      - Table 3.1-1; Turbine Building Vent Release
      - Table 3.1-1; Reactor Building Vent Release
      - Actual release data

   b. Determine S_i (the fraction of the total noble gas radioactivity in the gaseous effluent comprised by noble gas radionuclide i) for each individual noble gas radionuclide in the gaseous effluent.

$$S_i = \frac{A_i}{\Sigma_i A_i} \qquad (3.1\text{-}1)$$

A_i = The radioactivity of noble gas radionuclide i in gaseous effluent from Table 3.1-1, Turbine Building Vent Release; Table 3.1-1, Reactor Building Vent Release; or from analysis of gaseous effluent.

*If actual plant data is used, the dose constants need to be confirmed.

2. Determine Q_t (the maximum acceptable total release rate of all noble gas radionuclides in the gaseous effluent, μCi/sec) based upon the whole body exposure limit.

$$Q_t = \frac{500}{(\chi/Q)\Sigma_i(K_iS_i)} \qquad (3.1\text{-}2)$$

$\overline{(\chi/Q)_{tb}}$ = The highest calculated annual average relative concentration of effluents released via the Turbine Building Vent for any area at or beyond the site boundary for all sectors (sec/m^3) from Table A-1, Appendix A

= 7.50 E-6 sec/m^3

$\overline{(\chi/Q)_{rb}}$ = The highest calculated annual average relative concentration of effluents released via the Reactor Building Vent for any area at or beyond the site boundary for all sectors (sec/m^3) from Table A-7, Appendix A

= 2.0 E-7 sec/m^3

NOTE: Use the χ/Q that applies to the monitor for which the alarm setpoint is being calculated.

K_i = The total whole body dose factor due to gamma emissions from noble gas radionuclide i (mrem/year/μCi/m^3) from Table 3.1-2.

3. Determine Q_t based upon the skin exposure limit.

$$Q_t = \frac{3000}{(\chi/Q)\Sigma_i[(L_i + 1.1\ M_i)S_i]} \qquad (3.1\text{-}3)$$

$L_i + 1.1M_i$ = The total skin dose factor due to emissions from noble gas radionuclide i (mrem/year/μCi/m^3) from Table 3.1-2.

NOTE: The Turbine Building radiation monitors are designed to input the monitor high alarm setpoint in μCi/sec or μCi/cc. The monitor setpoint in μCi/sec can be obtained by multiplying the lowest Q_t value (obtained from Sections 3.1.1.2 and 3.1.1.3) by the T_m value found in Section 3.1.1.5.b. The μCi/cc setpoint can be obtained by dividing the μCi/sec setpoint by the design flow rate in cc/sec. The equations for calculating the setpoint in cpm are included for completeness and may be used if desired.

4. Determine C_t (the maximum acceptable total radioactivity concentration of all noble gas radionuclides in the gaseous effluent, μCi/sec/cfm).

$$C_t = \frac{Q_t}{f} \qquad (3.1\text{-}4)$$

NOTE: Use the <u>lower</u> of the Q_t values obtained in Sections 3.1.1.2 and 3.1.1.3.

f = The maximum acceptable effluent flow rate at the point of release (cfm) based on design flow rates

= 15,500 cfm (Turbine Building Vent)

= 172,800 cfm (Reactor Building Vent)

5. Determine the monitor high alarm setpoint above background:

a. Determine CR (the calculated monitor count rate above background attributed to the noble gas radionuclides, net cpm).

$$CR = \frac{C_t}{E_m} \qquad (3.1\text{-}5)$$

E_m = The detection efficiency of the monitor for the "mix" of noble gas radionuclides in the gaseous effluent (μCi/sec/cfm•cpm) from E&RC files

b. Determine HSP (the monitor high alarm setpoint with background, cpm).

$$HSP = T_m CR + Bkg \qquad (3.1\text{-}6)$$

T_m = Fraction of the radioactivity from the site that may be released via the monitored pathway to ensure that the site boundary limit is not exceeded during simultaneous releases from several pathways

= 0.10 for the Unit 1 Turbine Building Vent Gas Monitor

= 0.10 for the Unit 2 Turbine Building Vent Gas Monitor

= 0.20 for the Unit 1 Reactor Building Vent Gas Monitor

= 0.20 for the Unit 2 Reactor Building Vent Gas Monitor

Bkg = The background count rate (cpm) due to internal contamination and the radiation levels in the area in which the monitor is installed when the detector sample chamber is filled with uncontaminated air

c. The monitor high alarm setpoint including background (cpm) shall be set at or below the HSP value determined above.

3.1.2 Setpoint Based on Conservative Radionuclide Mix (Long-Term Elevated Release

The following method applies to gaseous releases via the stack when determining the high-high alarm setpoint for the Stack Monitor during continuous release via the stack.

1. Determine the "mix" (noble gas radionuclide composition) of the gaseous effluent (the "mix" can be determined from actual data or by using GALE code results of Table 3.1-1):*

a. Determine the gaseous source terms that are representative of the "mix" of the gaseous effluent. Gaseous source terms are the noble gases radionuclide activity concentrations in the effluent.

Gaseous source teams can be obtained from:

- Table 3.1-1; Stack Release
- Actual Release Data

b. Determine S_i (the fraction of the total radioactivity in the gaseous effluent comprised by noble gas radionuclide i) for each individual noble gas radionuclide in the gaseous effluent.

$$S_i = \frac{A_i}{\Sigma_i A_i} \qquad (3.1\text{-}7)$$

A_i = The radioactivity of noble gas radionuclide i in gaseous effluent from Table 3.1-1, Stack Release, or from analysis of gaseous effluent.

2. Determine Q_t (the maximum acceptable total release rate of all noble gas radionuclides in the gaseous effluent, μCi/sec) based upon the whole body exposure limit.

*If actual plant data is used, the dose constants need to be confirmed.

$$Q_t = \frac{500}{\Sigma_i[V_i S_i]} \quad (3.1\text{-}8)$$

V_i = The constant for noble gas radionuclide i accounting for the gamma radiation from the elevated finite plume (mrem/year/μCi/sec) from Table 3.1-2

3. Determine Q_t based upon the skin exposure limit.

$$Q_t = \frac{3000}{\Sigma_i[(L_i(\chi/Q)_s + 1.1B_i)S_i]} \quad (3.1\text{-}9)$$

$L_i\overline{(\chi/Q)_s} + 1.1B_i$ = The total skin dose constant for long-term releases (greater than 500 hours/year) due to emissions from noble gas radionuclide i (mrem/year/μCi/sec) from Table 3.1-2).

NOTE: The stack radiation monitor is designed to input the monitor high-high alarm setpoint in μCi/sec or μCi/cc. The monitor setpoint in μCi/sec can be obtained by multiplying the lowest Q_t value (obtained from Sections 3.1.2.2 and 3.1.2.3 by the T_m value found in Section 3.1.2.5.b. The μCi/cc setpoint can be obtained by dividing the μCi/sec setpoint by the design flow rate in cc/sec. The equations for calculating the setpoint in cps are included for completeness and may be used if desired.

4. Determine C_t (the total maximum acceptable radioactivity concentration of noble gas radionuclides in the gaseous effluent, μCi/sec/cfm).

$$C_t = \frac{Q_t}{f} \quad (3.1\text{-}10)$$

NOTE: Use the <u>lowest</u> of the Q_t values obtained in Sections 3.1.2.2 and 3.1.2.3.

f = The maximum acceptable effluent flow rate at the point of release (cfm) based on design flow rates

= 86,000 cfm (stack)

5. Determine the monitor high-high alarm setpoint above background:

a. Determine the CR (the calculated monitor count rate above background attributed to the noble gas radionuclides, net cpm).

$$CR = \frac{C_t}{E_m} \qquad (3.1\text{-}11)$$

E_m = The detection efficiency of the monitor for the "mix" of noble gas radionuclides in the gaseous effluent (μCi/sec/cfm•cpm) from E&RC files

b. Determine HHSP (the monitor high-high alarm setpoint with background, cpm).

$$HHSP = T_m CR + Bkg \qquad (3.1\text{-}12)$$

T_m = Fraction of the radioactivity from the site that may be released via the monitored pathway to ensure that the site boundary limit is not exceeded during simultaneous releases from several pathways

= 0.40 for the Stack Monitor

Bkg = The background count rate (cpm) due to internal contamination and the radiation levels in the area in which the monitor is installed when the detector sample chamber is filled with uncontaminated air

c. The monitor high-high alarm setpoint including background (cpm) shall be set at or below the HHSP value determined above.

3.1.3 Condenser Air Ejector Monitor Alarm Setpoint

This procedure determines the alarm setpoint for the Condenser Air Ejector Monitor that will provide reasonable assurance that the total body exposure to an individual at the exclusion area boundary will not exceed a small fraction of the limits of 10CFR100 in the event of an inadvertent release via the condenser air ejector.

1. The following method applies to gaseous releases via the Units 1 and 2 condenser air ejectors when determining the maximum allowable alarm setpoint for the Condenser Off-gas Radiation Monitors.

   a. Determine Q, the allowable release rate (μCi/sec) at the air ejector for the noble gas radionuclides.

      Technical Specification 3.7.5 limits the gross radioactivity rate of noble gases measured at the main condenser air ejector to less than or equal to 243,600 μCi/sec (after 30 minutes' decay). Assume that the noble gas concentrations at the air ejector (t = 0) are representative of the GALE code. Since the holdup time between the air ejector and the stack (down the 30-minute holdup line) can vary due to operational conditions, the mix of the noble gases at the stack should be determined based on the actual decay time not to exceed 30 minutes. This mix can then be applied to the 243,600 μCi/sec limit and then back-calculated to determine the allowable release rate at the air ejector, Q. As an example, assume that the holdup time is 30 minutes. The mix of the noble gases after 30 minutes' decay (t = 30 minutes) can be determined by the following table.

Nuclide	GALE Code Rev. 0 Steam (µCi/gm) t = 0	Steam (µCi/gm) t = 0	µCi/sec* t = 0	$e^{-\lambda t}$ t = 30m	µCi/sec t = 30m	Fraction of Mix t = 30m
	(for 3400 MWt)	(for 2923 MWt)				
Kr-83m	1.1E-3	9.46E-4	1.52E+3	8.3E-1	1.26E+3	2.85E-2
Kr-85m	1.9E-3	1.63E-3	2.63E+3	9.2E-1	2.43E+3	5.50E-2
Kr-85	6.0E-6	5.16E-6	8.31E+0	1.0E+0	8.31E+0	1.88E-4
Kr-87	6.6E-3	5.67E-3	9.14E+3	7.6E-1	6.96E+3	1.57E-1
Kr-88	6.6E-3	5.67E-3	9.14E+3	8.8E-1	8.08E+3	1.82E-1
Kr-89	4.1E-2	3.52E-2	5.68E+4	1.4E-3	7.89E+1	1.78E-3
Kr-90	9.0E-2	7.74E-2	1.25E+5	1.7E-17	2.11E-12	4.76E-17
Xe-131m	4.7E-6	4.04E-6	6.51E+0	1.0E+0	6.50E+0	1.47E-4
Xe-133m	9.0E-5	7.74E-5	1.25E+2	9.9E-1	1.24E+2	2.80E-3
Xe-133	2.6E-3	2.24E-3	3.60E+3	1.0E+0	3.59E+3	8.11E-2
Xe-135m	8.4E-3	7.22E-3	1.16E+4	2.6E-1	2.99E+3	6.75E-2
Xe-135	7.2E-3	6.19E-3	9.97E+4	9.6E-1	9.60E+3	2.17E-1
Xe-137	4.7E-2	4.04E-2	6.51E+4	4.4E-3	2.90E+2	6.54E-3
Xe-138	2.8E-2	2.41E-2	3.88E+4	2.3E-1	8.87E+3	2.00E-1
				TOTAL	4.43E+4	1.00E+0

Applying this mix to 243,600 µCi/sec (after 30 minutes' delay) and back calculating to t = 0 will yield the allowable µCi/sec per noble gases at the air ejectors; i.e.:

$$\text{*Steam Flow} = (12.782\ \text{E6 lbs/hr})\left(\frac{0.1260\text{gm/sec}}{\text{lbs/hr}}\right) = 1.61\text{E6 gm/sec}$$

Nuclide	Fraction of Mix t = 30 min	Tech Spec (µCi/sec) t = 30 min	$e^{-\lambda t}$ t = 30 min	Tech Spec (µCi/sec) t = 0
Kr-83m	2.85E-2	6.95E+3	8.3E-1	8.38E+3
Kr-85m	5.50E-2	1.34E+4	9.2E-1	1.45E+4
Kr-85	1.88E-4	4.57E+1	1.0E+0	4.57E+1
Kr-87	1.57E-1	3.83E+4	7.6E-1	5.03E+4
Kr-88	1.82E-1	4.44E+4	8.8E-1	5.03E+4
Kr-89	1.78E-3	4.34 E+2	1.4E-3	3.12E+5
Kr-90	4.76E-17	1.16E-11	1.7E-17	6.85E+5
Xe-131m	1.47E-4	3.58E+1	1.0E+0	3.58E+1
Xe-133m	2.80E-3	6.81E+2	9.9E-1	6.85E+2
Xe-133	8.11E-2	1.97E+4	1.0E+0	1.98E+4
Xe-135m	6.75E-2	1.64E+4	2.6E-1	6.40E+4
Xe-135	2.17E-1	5.28E+4	9.6E-1	5.48E+4
Xe-137	6.54E-3	1.59E+3	4.4E-3	3.58E+5
Xe-138	2.00E-1	4.88E+4	2.3E-1	2.13E+5
TOTALS	1.00E+0	2.44E+5		1.83E+6

Therefore:

Q = 1.83E+6 µCi/sec (for 30 minutes' holdup)

b. Determine C_m (the total radioactivity concentration of noble gases) in the condenser air ejector gas (µCi/sec/cfm).

C_m = Q/f (3.1-13)

Q = The allowable release rate (µCi/sec) at the air ejector for noble gases

f = The main condenser air inleakage rate plus the radiolytic gas flow rate (cfm)

c. Determine the monitor high-high alarm setpoint above background.

(1) Determine MR (the calculated monitor response attributed to the noble gas radionuclides, mR/hr).

$$MR = \frac{C_m}{E_m} \quad (3.1\text{-}14)$$

E_m = The detection efficiency of the monitor for the "mix" of noble gas radionuclides in the gaseous stream [(μCi/sec)/(mR/hr•cfm)] from E&RC files

(2) The monitor high-high alarm setpoint (mR/hr) should be set at or below the MR value determined above.

3.1.4 Condenser Off-Gas Treatment System (AOG) Monitor Alarm Setpoint Determination

This method determines the monitor alarm setpoint that includes sufficient noble gas activity to cause an alarm at the stack effluent noble gas monitor.

1. Determine Q_t (the maximum acceptable total release rate of all noble gas radionuclides in the gaseous effluent, μCi/sec) based upon the whole body exposure (see Equation 3.1-8) and skin exposure (see Equation 3.1-9).

NOTE: Use the lowest of the Q_t values obtained.

2. Determine Q_s (the site adjusted maximum release rate, μCi/sec, for effluent releases via the stack).

$$Q_s = Q_t \times T_m \quad (3.1\text{-}15)$$

T_m = Fraction of radioactivity from the site that may be released via the stack to ensure that the site boundary limit is not exceeded during simultaneous releases from several pathways

= 0.4 for the stack monitor

3. Determine HSP (high alarm setpoint in μCi/cc).

$$HSP = Q_s \div f \qquad (3.1\text{-}16)$$

f = Maximum design flow rate of the AOG System

= 70,800 cc/sec (150 cfm)

4. The monitor high alarm setpoint shall be set at or below the HSP value determined above.

TABLE 3.1-1

GASEOUS SOURCE TERMS**
(Ci/year/reactor)

	Turbine Bldg Vent		Reactor Bldg Vent		Stack	
Radionuclide	A_i (Ci/yr)	S_i	A_i (Ci/yr)	S_i	A_i (Ci/yr)	S_i
Kr-83m	*	-	*	-	3.7E+4	2.84E-2
Kr-85m	6.8E+1	1.95E-2	6.0E+0	1.72E-2	7.2E+4	5.46E-2
Kr-85	*	-	*	-	2.4E+2	1.86E-4
Kr-87	1.9E+2	5.45E-2	6.0E+0	1.72E-2	2.05E+5	1.56E-1
Kr-88	2.3E+2	6.59E-2	6.0E+0	1.72E-2	2.4E+5	1.82E-1
Kr-89	*	-	*	-	3.5E+3	2.64E-3
Xe-131m	*	-	*	-	1.9E+2	1.46E-4
Xe-133m	*	-	*	-	3.6E+3	2.78E-3
Xe-133	2.8E+2	8.03E-2	1.32E+2	3.78E-1	1.1E+5	8.24E-2
Xe-135m	6.5E+2	1.86E-1	9.2E+1	2.64E-1	8.8E+4	6.72E-2
Xe-135	6.3E+2	1.81E-1	6.8E+1	1.95E-1	2.8E+5	2.16E-1
Xe-137	*	-	*	-	1.1E+4	8.09E-3
Xe-138	1.44E+3	4.13E-1	1.4E+1	4.01E-2	2.6E+5	2.00E-1
Ar-41	*	-	2.5E+1	7.16E-2	*	-
TOTAL	3.49E+3		3.49E+2		1.31E6	

* < 1.0E1 + 0

**Source terms are based upon GALE code and not actual releases.

TABLE 3.1-2

DOSE FACTORS AND CONSTANTS

Radio Nuclide	Total Whole Body Dose Factor (K_i) (mrem/yr/µCi/m^3)	Total Skin Dose Factor ($L_i + 1.1M_i$) (mrem/yr/µCi/m^3)	Total Body Dose Constant For Long-Term Releases (V_i) (mrem/yr/µCi/sec)	Total Skin Dose Constant for Long-Term Releases ($L_i(\chi/Q)_s + 1.1B_i$) (mrem/yr/µCi/sec)
Kr-83m	7.56E-2	2.12E+1	2.93E-9	6.57E-7
Kr-85m	1.17E+3	2.81E+3	1.22E-4	2.36E-4
Kr-85	1.61E+1	1.36E+3	1.74E-6	3.64E-5
Kr-87	5.92E+3	1.65E+4	5.39E-4	1.14E-3
Kr-88	1.47E+4	1.91E+4	1.36E-3	2.31E-3
Kr-89	1.66E+4	2.91E+4	9.47E-4	1.81E-3
Xe-131m	9.15E+1	6.48E+2	2.96E-5	6.39E-5
Xe-133m	2.51E+2	1.35E+3	2.23E-5	6.58E-5
Xe-133	2.94E+2	6.94E+2	2.40E-5	4.95E-5
Xe-135m	3.12E+3	4.41E+3	2.94E-4	5.08E-4
Xe-135	1.81E+3	3.97E+3	1.92E-4	3.64E-4
Xe-137	1.42E+3	1.39E+4	8.47E-5	4.46E-4
Xe-138	8.83E+3	1.43E+4	8.60E-4	1.52E-3
Ar-41	8.84E+3	1.29E+4	1.01E-3	1.73E-3

3.2 COMPLIANCE WITH 10CFR20 (GASEOUS)

3.2.1 Noble Gases

The gaseous effluent monitors' setpoints are utilized to show compliance with 10CFR20 for noble gases. However, because they are based upon a conservative mix of radionuclides, the possibility exists that the setpoints could be exceeded and yet 10CFR20 limits may not be exceeded. Therefore, the following methodology has been provided in the event that if the alarm/trip setpoints are exceeded, a determination may be made as to whether the actual releases have exceeded 10CFR20.

The dose rate in unrestricted areas resulting from noble gas effluents is limited to 500 mrem/year to the total body and 3000 mrem/year to the skin. Based upon NUREG 0133, the following are used to show compliance with 10CFR20.

$$\Sigma_i \left[V_i \dot{Q}_{i_s} + K_i \overline{(\chi/Q)_v}\, \dot{Q}_{i_v} \right] \leq 500 \text{ mrem/yr} \qquad (3.2\text{-}1)$$

$$\Sigma_i \left\{ \left[L_i \overline{(\chi/Q)_s} + 1.1 B_i \right] \dot{Q}_{i_s} + (L_i + 1.1 M_i)\, \overline{(\chi/Q)_v}\, \dot{Q}_{i_v} \right\} \leq 3000 \text{ mrem/yr} \qquad (3.2\text{-}2)$$

where:

K_i = The total body dose factor due to gamma emissions for noble gas radionuclide i, mrem/year per $\mu Ci/m^3$

L_i = The skin dose factor due to beta emissions for noble gas radionuclide i, mrem/year per $\mu Ci/m^3$

M_i = The air dose factor due to gamma emissions for noble gas radionuclide i, mrad/year per $\mu Ci/m^3$

V_i = The constant for each identified noble gas radionuclide i accounting for the gamma radiation from the elevated finite plume mrem/year per $\mu Ci/sec$

B_i = The constant for long-term releases (greater than 500 hours/year) for each identified noble gas radionuclide i accounting for the gamma radiation from the elevated finite plume in mrad/year per $\mu Ci/sec$

1.1 = The ratio of the tissue to air absorption coefficients over the energy range of the photon of interest, mrem/mrad

$\dot{Q}_{i_s}$ = The release rate of noble gas radionuclide i in gaseous effluents from free-standing stack, μCi/sec

$\dot{Q}_{i_v}$ = The release rate of noble gas radionuclide i in gaseous effluents from all vent releases, μCi/sec

At the Brunswick Steam Electric Plant (BSEP), gaseous releases may occur from:

1. The Turbine Building vent*
2. The Reactor Building vent
3. The stack

Releases from the Turbine Building are ground level. The sources of these releases are steam leakage through valve stems, pump seals, and flanged connections. Releases from the Reactor Building are considered mixed mode in nature, and the source is also leakage through valve stems, pump seals, and flanged connections. Releases from the stack are considered elevated. Their sources are the main condenser's steam jet air ejectors, Radwaste Building and AOG Building ventilation system exhausts, mechanical vacuum pump exhausts during startup, and gland seal off-gases.

Noble gas releases may occur from all three points. To show compliance with 10CFR20, Expressions 3.2-1 and 3.2-2 are now in terms of the actual release points for BSEP.

For the total body dose:

$$\Sigma_i V_i \dot{Q}_{i_s} + \Sigma_i K_i \left[\overline{(\chi/Q)_{rb}}\, \dot{Q}_{i_{rb}} + \overline{(\chi/Q)_{tb}}\, \dot{Q}_{i_{tb}} \right] \leq 500 \text{ mrem/yr} \qquad (3.2\text{-}3)$$

*Any effluents due to exfiltration from planned openings in the Turbine Building, Radwaste Building or AOG Building are combined with the Turbine Building's vent releases.

For the skin dose:

$$\Sigma_i \left[L_i \overline{(\chi/Q)_s} + 1.1 B_i\right] \dot{Q}_{i_s} + \Sigma_i \left[L_i + 1.1 M_i\right] \left[\overline{(\chi/Q)_{rb}}\, \dot{Q}_{i_{rb}} + \overline{\chi/Q_{tb}}\, \dot{Q}_{i_{tb}}\right] \leq 3000 \text{ mrem/yr} \quad (3.2\text{-}4)$$

Where:

$\dot{Q}_{i_s}$ = Release rate of radionuclide i from the stack, μCi/sec

$\dot{Q}_{i_{rb}}$ = Release rate of radionuclide i from the two Reactor Buildings, μCi/sec

$\dot{Q}_{i_{tb}}$ = Release rate of radionuclide i from the two Turbine Buildings, μCi/sec

$\overline{(\chi/Q)_s}$ = Annual average relative concentration for releases from the stack, sec/m^3

$\overline{(\chi/Q)_{rb}}$ = Annual average relative concentration for releases from the Reactor Buildings, sec/m^3

$\overline{(\chi/Q)_{tb}}$ = Annual average relative concentration for releases from the Turbine Buildings, sec/m^3

All other terms remain the same as those defined previously.

The determination of controlling location for implementation of 10CFR20 for noble gases is a function of the radionuclide mix, the isotopic release rate, and the meteorology.

The incorporation of these variables into Expressions 3.2-3 and 3.2-4 result in the following expressions for the controlling locations for the BSEP. This location is 0.7 miles, the NE site boundary.

For the total body:

$$\Sigma_i V_i \dot{Q}_{i_s} + \Sigma_i K_i (2.0 \times 10^{-7} \dot{Q}_{i_{rb}} + 2.9 \times 10^{-6} \dot{Q}_{i_{tb}}) \leq 500 \text{ mrem/yr} \quad (3.2\text{-}5)$$

For the skin:

$$\Sigma_i (2.5 \times 10^{-8} L_i + 1.1 B_i) \dot{Q}_{i_s} + \Sigma_i \left[(L_i + 1.1 M_i) (2.0 \times 10^{-7} \dot{Q}_{i_{rb}} + 2.9 \times 10^{-6} \dot{Q}_{i_{tb}}) \right] \leq 3000 \text{ mrem/yr} \quad (3.2\text{-}6)$$

The radionuclide mix was based upon source terms calculated using the NRC GALE code. They are presented in Table 3.2-1 as a function of release point. It should be noted, however, that the releases in Table 3.2-1 do not reflect the actual BSEP release data to date. The releases to date have been substantially less. This table was used as a calculational tool to determine the controlling location.

The χ/Q values utilized in the equations for implementation of 10CFR20 are based upon the maximum long-term annual average $\overline{(X/Q)}$ in the unrestricted area. Table 3.2-2 presents the distances from the Reactor and Turbine Buildings to the nearest unrestricted area for each of the 16 sectors as well as to the nearest residence, vegetable garden, cow, goat, and beef animal. Table 3.2-3 presents the distances and directions from the stack to the same site boundaries of Table 3.2-2. Note that only distance has changed in relation to Table 3.2-2.

Long-term annual (χ/Q) values for the stack, Reactor Building, and Turbine Building release points from BSEP to the special locations in Table 3.2-2 are presented in Appendix A. A description of the derivation is also provided in this appendix. χ/Q values at the limiting site boundary for releases from the Turbine Building, Reactor Building, and stack were obtained from Tables A-1, A-7, and A-13, respectively, of the appendix.

To determine the controlling location for implementation of 10CFR20, the two or three highest site boundary χ/Q values for each release point were utilized in conjunction with the radionuclide mix and release rate for each release point. Since mixed mode and elevated releases occur from BSEP, their maximum χ/Q value may not decrease with distance; i.e., the site boundary may not have the

highest χ/Q values. Therefore, long-term annual average χ/Q values were calculated at the midpoint of the 10 standard distances as given in Table A-4 of Appendix A. The highest two or three χ/Q values for each release point at a distance greater than the site boundary were used in conjunction with the radionuclide mix to determine the controlling location. A particular combination of release point mix and meteorology dominates in the determination of the controlling location. For BSEP, it is the stack, and the dominant factor in determining a control location becomes the V_i values. The controlling location is at the NE at the site boundary due to its higher V_i values.

Values for K_i, L_i, and M_i, which were used in the determination of the controlling locations and which are to be used by BSEP in Expressions 3.2-5 and 3.2-6 to show compliance with 10CFR20, are presented in Table 3.2-4. These values originate from NUREG 0472, Revision 0, and were taken from Table B-1 of the NRC Regulatory Guide 1.109, Revision 1. The values have been multiplied by 10^6 to convert picocuries^{-1} to microcuries^{-1} for use in Expressions 3.2-5 and 3.2-6.

Values for V_i and B_i for the finite plume model can be expressed as shown in Equations 3.2-7 and 3.2-8. They were calculated at the site boundary of each of the 16 sectors using the NRC code RABFIN. Values for V_i and B_i for each of the 16 sectors are presented in Appendix B.

$$B_i = \frac{K}{r_d} \Sigma_j \Sigma_k \Sigma_l \frac{f_{jk} \; A_{li} \; \mu_a \; E_l I}{\mu_j} \qquad (3.2\text{-}7)$$

I = The results of numerical integration over the plume spatial distribution of the airborne activity as defined by the meteorological condition of wind speed (μ_j) and atmospheric stability class "K" for a particular wind direction

K = A numerical constant representing unit conversions

$$= \frac{260 \text{ mrad (radians)}(m^3)\text{(transformation)}}{\text{sec(Mev)(Ci)}} \times \frac{16 \text{ sectors}}{2\pi \text{ radians}} \times \frac{10^{-6} \text{ Ci}}{\mu\text{Ci}} \times \frac{3.15 \times 10^7 \text{ sec}}{\text{yr}}$$

$$= 2.1 \times 10^4 \text{ mrad } (m^3) \text{ (transformation) / year (Mev) } (\mu\text{Ci})$$

r_d = The distance from the release point to the receptor location, meters

μ_j = The mean wind speed assigned to the jth wind speed class, meters/sec

f_{jk} = The joint frequency of occurrence of the jth wind speed class and the kth stability class (dimensionless)

A_{li} = The number of photons of energy corresponding to the lth energy group emitted per transformation of the ith radionuclide, number/transformation

E_l = The energy assigned to the lth energy group, MeV

μ_a = The energy absorption coefficient in air for photon energy E_l, meters^{-1}

The V_i factor is computed with conversion from air dose to tissue depth dose, thus;

$$V_i = 1.1\, K / r_d \; \Sigma_j \Sigma_k \Sigma_l \; \frac{f_{jk} \; A_{li} \; \mu_a \; E_l \, e^{-\mu} \; T^{Td}}{\mu_j} \qquad (3.2\text{-}8)$$

Where:

μ_T = The tissue energy absorption coefficient for photons of energy E_l, cm^2/gm

T_d = The tissue density thickness taken to represent the total body dose (5 gm/cm^2)

1.1 = The ratio of the tissue to air absorption coefficients over the energy range of photons of interest, mrem/mrad

3.2.2 I-131, I-133, Particulates, and Tritium*

The dose rate in unrestricted areas resulting from the release of radioiodines and particulates with half-lives greater than 8 days is limited to 1500 mrem/year to any organ. Based upon NUREG 0133, the following is used to show compliance with 10CFR20.

$$\Sigma_i P_i (W_s \dot{Q}_{i_s} + W_v \dot{Q}_{i_v}) \leq 1500 \text{ mrem/yr} \qquad (3.2\text{-}9)$$

Where:

P_i = Dose parameter for radioiodines and particulates with half-lives greater than 8 days based upon the critical organ and the most restrictive age group (infant)

= mrem/year per $\mu Ci/m^3$ for inhalation pathways and for tritium

= mrem/year per $\mu Ci/sec$ per m^{-2} for food and ground plane pathways

$\dot{Q}_{i_s}$ = The release rate of radionuclide i in gaseous effluents from free-standing stack, $\mu Ci/sec$

$\dot{Q}_{i_v}$ = The release rate of radionuclide i in gaseous effluents from all vents releases, $\mu Ci/sec$

W_v = The highest calculated annual average dispersion parameter for estimating the dose to an individual at the controlling location due to all vent releases

= sec/m^3 for the inhalation pathway

= $meters^{-2}$ for the food and ground plane pathways

*For ODCM calculations performed to comply with ODCM TRs 7.3.7.2 and 7.3.9.1, the I-133 values used are determined by actual analysis.

W_s = The highest calculated annual average dispersion parameter for estimating the dose to an individual at the controlling location due to stack releases

= sec/m^3 for the inhalation pathway

= meters^{-2} for the food and ground plane pathways

Radioiodines, particulates, and tritium may be released from the stack, Reactor Buildings, and Turbine Buildings at BSEP. Radioiodines and particulates may also be released from other sources such as decontamination, waste processing, and burning of waste oil in the incinerator. Effluents from the decontamination and waste processing facilities in the Radioactive Materials Container and Storage Building, Low Level Warehouse, and hot shop, incinerator and any building exfiltration are combined with the Turbine Building's vent releases. To show compliance with 10CFR20, (see Appendix H for waste oil) Expression 3.2-9 is modified to incorporate the various release points for BSEP:

$$\Sigma_i P_i (W_s \dot{Q}_{i_s} + W_{rb} \dot{Q}_{i_{rb}} + W_{tb} \dot{Q}_{i_{tb}}) \leq 1500 \text{ mrem/yr} \qquad (3.2\text{-}10)$$

Where:

W_s = The annual average dispersion parameter for the stack

W_{rb} = The annual average dispersion parameter for the Reactor Buildings

W_{tb} = Annual average dispersion parameter for the Turbine Buildings

$\dot{Q}_{i_{rb}}$ = Release of radionuclide i from the two Reactor Buildings, µCi/sec

$\dot{Q}_{i_{tb}}$ = Release of radionuclide i from the two Turbine Buildings, µCi/sec

$\dot{Q}_{i_s}$ = Release of radionuclide i from the stack, μCi/sec

All other terms are the same as those defined previously.

In the calculation to show compliance with 10CFR20, only the inhalation, ground plane, cow milk, and goat milk pathways are considered for BSEP. In determining the dose at a particular location, W is a function of pathway. For the food and ground plane pathways, W is in terms of D/Q (i.e., deposition). If the inhalation pathway is considered, W is in terms of χ/Q. Incorporation of the various pathways into Expression 3.2-10 results in the following:

$$\Sigma_i P_{i_I} \left[\overline{(\chi/Q)_s}\, \dot{Q}_{i_s} + \overline{(\chi/Q)_{rb}}\, \dot{Q}_{i_{rb}} + \overline{(\chi/Q)_{tb}}\, \dot{Q}_{i_{tb}} \right] + \Sigma_i (P_{i_G} + P_{i_M}) \left[\overline{(D/Q)_s}\, \dot{Q}_{i_s} + \overline{(D/Q)_{rb}}\, \dot{Q}_{i_{rb}} + \overline{(D/Q)_{tb}}\, \dot{Q}_{i_{tb}} \right] \leq 1500 \text{ mrem/yr} \quad (3.2\text{-}11)$$

Where:

P_{i_I} = Dose parameter for radionuclide i for the inhalation pathway, mrem/year per μCi/sec^3

P_{i_G} = Dose parameter for radionuclide i for the ground plane pathway, mrem/year per μCi/sec per m^{-2}

P_{i_M} = Dose parameter for radionuclide i for either the cow milk or goat milk pathway, mrem/year per μCi/sec per m^{-2}

$\overline{(\chi/Q)_{rb}}$ = Annual average relative concentrations for releases from the Reactor Buildings, sec/m^3

$\overline{(\chi/Q)_{tb}}$ = Annual average relative concentrations for releases from the Turbine Buildings, sec/m^3

$\overline{(\chi/Q)_s}$ = Annual average relative concentrations for releases from the stack, sec/m^3

$\overline{(D/Q)_{rb}}$ = Annual average deposition for releases from the Reactor Buildings, m^{-2}

$\overline{(D/Q)_{tb}}$ = Annual average deposition for releases from the Turbine Buildings, m^{-2}

$\overline{(D/Q)_{s}}$ = Annual average deposition for releases from the stack, m^{-2}

In the case of tritium, the W parameter for the food pathway (cow or goat milk) is based upon χ/Q. Since tritium is a weak beta emitter, the ground plane contribution is zero for tritium. Therefore, the left-hand side of Expression 3.2-10 can be written as the following:

For tritium:

$$\dot{D}_T = \left(P_{T_I} + P_{T_M}\right)\left[\overline{(\chi/Q)_s}\,\dot{Q}_{T_s} + \overline{(\chi/Q)_{rb}}\,\dot{Q}_{T_{rb}} + \overline{(\chi/Q)_{tb}}\,\dot{Q}_{T_{tb}}\right] \quad (3.2\text{-}12)$$

Where:

$\dot{D}_T$ = Dose rate due to tritium releases, mrem/year

P_{T_I} = Dose parameter for tritium for the inhalation pathway, mrem/year per $\mu Ci/m^3$

P_{T_M} = Dose parameter for tritium for the milk pathway, mrem/year per $\mu Ci/m^3$

$\dot{Q}_{T_s}$ = Release rate of tritium from the stack, μCi/sec

$\dot{Q}_{T_{rb}}$ = Release rate of tritium from the two Reactor Buildings, μCi/sec

$\dot{Q}_{T_{tb}}$ = Release rate of tritium from the two Turbine Buildings, μCi/sec

Since P_{i_I} for tritium equals 647 and P_{i_M} equals 2380, Equation 3.2-12 reduces to:

$$\dot{D}_T = 3.0 \times 10^3 \left[\overline{(\chi/Q)_s}\, \dot{Q}_{T_s} + \overline{(\chi/Q)_{rb}}\, \dot{Q}_{T_{rb}} + \overline{(\chi/Q)_{tb}}\, \dot{Q}_{T_{tb}} \right] \quad (3.2\text{-}13)$$

To show compliance with 10CFR20, Expressions 3.2-11 and 3.2-13 are evaluated first at the limiting site boundary. It should be noted that the sum of the dose rates from radioiodines and particulates and from tritium must be summed and their combined dose rates be less than 1500 mrem/year to show compliance with 10CFR20. If the 1500 mrem/year limit is exceeded at the limiting site boundary when all pathways are considered present at the site boundary but the inhalation pathway contributes less than 1500 mrem/year, then Expressions 3.2-11 and 3.2-13 are evaluated at the limiting real pathway location. The limiting site boundary location is 0.7 miles NE. Expression 3.2-11 becomes:

For radioiodines and particulates:

$$\Sigma_i P_{i_I} (2.5 \times 10^{-8}\ \dot{Q}_{i_s} + 2.0 \times 10^{-7}\ \dot{Q}_{i_{rb}} + 2.9 \times 10^{-6}\ \dot{Q}_{i_{tb}}) +$$

$$\Sigma_i (P_{i_G} + P_{i_M}) (1.4 \times 10^{-9}\ \dot{Q}_{i_s} + 4.3 \times 10^{-9}\ \dot{Q}_{i_{rb}} + 1.9 \times 10^{-8}\ \dot{Q}_{i_{tb}}) \leq 1500 \text{ mrem/yr}$$

(3.2-14)

For BSEP, the limiting "hypothetical" real pathway location is the cow milk pathway 4.75 miles NE. At this location, Expression 3.2-11 becomes:

$$\Sigma_i P_{i_I} (2.4 \times 10^{-8}\ \dot{Q}_{i_s} + 4.1 \times 10^{-8}\ \dot{Q}_{i_{rb}} + 1.4 \times 10^{-7}\ \dot{Q}_{i_{tb}}) + \Sigma_i (P_{i_G} + P_{i_M})$$

$$(2.2 \times 10^{-10}\ \dot{Q}_{i_s} + 2.7 \times 10^{-10}\ \dot{Q}_{i_{rb}} + 5.7 \times 10^{-10}\ \dot{Q}_{i_{tb}}) \leq 1500 \text{ mrem/yr}$$

(3.2-15)

For tritium, at the limiting site boundary, Equation 3.2-13 becomes:

For tritium:

$$\dot{D}_T = 3.0 \times 10^3 \left(2.5 \times 10^{-8} \dot{Q}_{T_s} + 2.0 \times 10^{-7} \dot{Q}_{T_{rb}} + 2.9 \times 10^{-6} \dot{Q}_{T_{tb}}\right) \quad (3.2\text{-}16)$$

At the "hypothetical" limiting real pathway location, Equation 3.2-13 becomes:

For tritium:

$$\dot{D}_T = 3.0 \times 10^3 \left(2.4 \times 10^{-8} \dot{Q}_{T_s} + 4.1 \times 10^{-8} \dot{Q}_{T_{rb}} + 1.4 \times 10^{-7} \dot{Q}_{T_{tb}}\right) \quad (3.2\text{-}17)$$

The determination of controlling location for implementation of 10CFR20 for radioiodines and particulates is a function of the same two parameters as for noble gases plus a third receptor pathway location. The radionuclide mix was again based upon the source terms calculated using the GALE code. The mix and the source terms are presented in Table 3.2-1 as a function of release point.

In the determination of the controlling site boundary location, the highest two or three site boundary χ/Q and D/Q values for each release point were utilized in conjunction with the radionuclide mix and the release rate for each release point. At BSEP, the release rate which dominates comes from the stack. The higher values for χ/Q and D/Q for the NE sector at the site boundary make it the dominant meteorological sector and the control location.

In the determination of receptor controlling location, the highest two or three D/Q values from each release point to the pathway locations of Table 3.2-2 are utilized in conjunction with the radionuclide mix and release rate for each release point. For BSEP, the controlling location is a hypothetical cow milk pathway 4.75 miles NE of the Reactor Building and Turbine Buildings.

Values for P_i were calculated for an infant for various radionuclides for the inhalation, ground plane, cow milk, and goat milk pathways using the methodology of NUREG 0133. The P_i values are presented in Table 3.2-5. The values of P_i reflect, for each radionuclide, the maximum organ dose factor for each individual pathway of exposure. Because the goat milk pathway is not present at BSEP, the cow milk pathway P_i values were utilized in the determination of the various controlling locations. For the case of an infant being present at the site boundary or at the real pathway location, the ground plane pathway is not considered as a reasonable exposure pathway for the infant (i.e., $P_G = 0$). However, P_i values are presented in Table 3.2-5 for completeness. Appendix C presents the methodology which was utilized in calculating P_i values.

Annual average D/Q values at the special locations for the stack, Reactor Building, and Turbine Building release points, respectively, which were utilized in Expressions 3.2-14 through 3.2-17 were obtained from the tables presented in Appendix A. The X/Q values in Expressions 3.2-14 through 3.2-17 were also obtained from the tables presented in Appendix A. D/Q values at the limiting site boundary location and the limiting real pathway location for releases from the Turbine Buildings, the Reactor Buildings, and the stack were obtained from Tables A-3, A-9, and A-15, respectively, of Appendix A. X/Q values at these same locations for these same release points were obtained from Tables A-1, A-7, and A-13 of Appendix A. A description of the derivation of the X/Q and D/Q values is provided in Appendix A.

TABLE 3.2-1

RELEASES FROM BRUNSWICK STEAM ELECTRIC PLANT*
(Ci/yr per reactor)

Isotope	Turbine Building (Ground Level)	Reactor Building (Mixed Mode)	Stack (Elevated)
Kr-83m	0	0	3.7E4
Kr-85m	6.8E1	6.0E0	7.2E4
Kr-85	0	0	2.4E2
Kr-87	1.9E2	6.0E0	2.05E5
Kr-88	2.3E2	6.0E0	2.4E5
Kr-89	0	0	3.5E3
Xe-131m	0	0	1.9E2
Xe-133m	0	0	3.6E3
Xe-133	2.8E2	1.3E2	1.1E5
Xe-135m	6.5E2	9.2E1	8.8E4
Xe-135	6.3E2	6.8E1	2.8E5
Xe-137	0	0	1.1E4
Xe-138	1.4E3	1.4E1	2.6E5
Ar-41	0	2.5E1	0
I-131	1.9E-2	3.4E-1	5.1
I-133	7.6E-2	1.4	2.0E1
Cr-51	1.3E-4	6.0E-4	9.0E-3
Mn-54	6.0E-6	6.0E-3	3.6E-2
Fe-59	5.0E-6	8.0E-4	1.5E-2
Co-58	6.0E-6	1.2E-3	4.5E-3
Co-60	2.0E-5	2.0E-2	9.0E-2
Zn-65	2.0E-6	4.0E-3	1.0E-3
Sr-89	6.0E-5	1.8E-4	5.0E-4
Sr-90	2.0E-7	1.0E-5	3.0E-4
Zr-95	1.0E-6	8.0E-4	5.0E-5
Sb-124	3.0E-6	4.0E-4	5.0E-5
Cs-134	3.0E-6	8.0E-3	4.5E-3
Cs-136	5.0E-7	6.0E-4	4.5E-4
Cs-137	6.0E-6	1.1E-2	9.0E-3
Ba-140	1.1E-4	8.0E-4	1.0E-4
Ce-141	6.0E-6	2.0E-4	2.6E-3
C-14	0	0	9.5
H-3	0	3.6E1	0

*Calculations based upon GALE code and not actual releases.

TABLE 3.2-2

DISTANCE TO CONTROLLING LOCATIONS AS MEASURED FROM THE BRUNSWICK PLANT CENTER (Mi)

Sector	Site Boundary	Milk Cow	Milk Goat	Meat Animal	Nearest Resident	Nearest Garden
NNE	0.7	-	-	-	0.8	1.2
NE	0.7	4.75*	-	-	-	-
ENE	0.7	-	-	-	-	-
E	0.7	-	-	-	-	-
ESE	0.7	-	-	-	1.5	-
SE	0.7	-	-	-	0.9	-
SSE	0.7	-	-	-	1.0	-
S	0.8	-	-	-	1.1	1.8
SSW	0.8	-	-	-	1.2	1.6
SW	0.7	-	-	-	1.0	1.5
WSW	0.7	-	-	-	1.2	1.2
W	0.7	-	-	-	0.8	0.8
WNW	0.6	-	-	-	0.8	1.0
NW	0.6	-	-	-	0.9	4.8
NNW	0.6	-	-	-	0.8	4.4
N	0.7	-	-	-	0.7	0.9

*A "hypothetical" cow milk pathway is located at this point in accordance with 5.3.1 of NUREG 0133.

TABLE 3.2-3

DISTANCE TO SITE BOUNDARIES BASED UPON BRUNSWICK PLANT CENTER AND DIRECTIONS FROM THE STACK

Based on Center of Brunswick Plant

Direction	Site Boundary Distance (Mi)
NNE	0.7
NE	0.7
ENE	0.7
E	0.7
ESE	0.7
SE	0.7
SSE	0.7
S	0.8
SSW	0.8
SW	0.7
WSW	0.7
W	0.7
WNW	0.6
NW	0.6
NNW	0.6
N	0.7

From Stack to Site Boundaries of Table 3.2-2

Direction	Distance (Mi)
NNE	0.7
NE	0.7
ENE	0.7
E	0.6
ESE	0.6
SE	0.6
SSE	0.6
S	0.6
SSW	0.7
SW	0.7
WSW	0.7
W	0.8
WNW	0.7
NW	0.7
NNW	0.7
N	0.8

TABLE 3.2-4

DOSE FACTORS FOR NOBLE GASES AND DAUGHTERS*

Radionuclide	Total Body Dose Factor K_i (mrem/yr per $\mu Ci/m^3$)	Skin Dose Factor L_i (mrem/yr per $\mu Ci/m^3$)	Gamma Air Dose Factor M_i (mrad/yr per $\mu Ci/m^3$)	Beta Air Dose Factor N_i (mrad/yr per $\mu Ci/m^3$)
Kr-83m	7.56E-02**	---	1.93E+01	2.88E+02
Kr-85m	1.17E+03	1.46E+03	1.23E+03	1.97E+03
Kr-85	1.61E+01	1.34E+03	1.72E+01	1.95E+03
Kr-87	5.92E+03	9.73E+03	6.17E+03	1.03E+04
Kr-88	1.47E+04	2.37E+03	1.52E+04	2.93E+03
Kr-89	1.66E+04	1.01E+04	1.73E+04	1.06E+04
Kr-90	1.56E+04	7.29E+03	1.63E+04	7.83E+03
Xe-131m	9.15E+01	4.76E+02	1.56E+02	1.11E+03
Xe-133m	2.51E+02	9.94E+02	3.27E+02	1.48E+03
Xe-133	2.94E+02	3.06E+02	3.53E+02	1.05E+03
Xe-135m	3.12E+03	7.11E+02	3.36E+03	7.39E+02
Xe-135	1.81E+03	1.86E+03	1.92E+03	2.46E+03
Xe-137	1.42E+03	1.22E+04	1.51E+03	1.27E+04
Xe-138	8.83E+03	4.13E+03	9.21E+03	4.75E+03
Ar-41	8.84E+03	2.69E+03	9.30E+03	3.28E+03

*The listed dose factors are for radionuclides that may be detected in gaseous effluents.

**7.56E-02 = 7.56×10^{-2}

TABLE 3.2-5

P_i VALUES FOR AN INFANT FOR THE BRUNSWICK STEAM ELECTRIC PLANT*

Isotope	Inhalation	Ground Plane	Cow Milk	Goat Milk
H-3	6.47E2	0	2.38E3	4.86E3
P-32	2.03E6	0	1.60E11	1.93E11
Cr-51	1.28E4	6.67E6	4.79E6	5.65E5
Mn-54	1.00E6	1.09E9	3.89E7	4.68E6
Fe-59	1.02E6	3.92E8	3.93E8	5.11E6
Co-58	7.77E5	5.29E8	6.06E7	7.28E6
Co-60	4.51E6	4.40E9	2.10E8	2.52E7
Zn-65	6.47E5	6.89E8	1.90E10	2.29E9
Rb-86	1.90E5	1.28E7	2.22E10	2.67E9
Sr-89	2.03E6	3.16E4	1.27E10	2.66E10
Sr-90	4.09E7	-	1.21E11	2.55E11
Y-91	2.45E6	1.52E6	5.26E6	6.32E5
Zr-95	1.75E6	3.48E8	8.28E5	9.95E4
Nb-95	4.79E5	1.95E8	2.06E8	2.48E7
Ru-103	5.52E5	1.55E8	1.05E5	1.27E4
Ru-106	1.16E7	2.99E8	1.44E6	1.73E5
Ag-110m	3.67E6	3.14E9	1.46E10	1.75E9
Sn-113	2.30E5	5.19E7	2.25E7	2.25E6
Te-127m	1.31E6	1.18E5	1.04E9	1.24E8
Te-129m	1.68E6	2.86E7	1.40E9	1.68E8
Cs-134	7.03E5	2.81E9	6.79E10	2.04E11
Cs-136	1.35E5	2.13E8	5.76E9	1.73E10
Cs-137	6.12E5	1.15E9	6.02E10	1.81E11
Ba-140	1.60E6	2.94E7	2.41E8	2.89E7
Ce-141	5.17E5	1.98E7	1.37E7	1.65E6
Ce-144	9.84E6	5.84E7	1.33E8	1.60E7
I-131	1.48E7	2.46E7	1.06E12	1.27E12
I-132	1.69E5	1.78E6	1.39E2	1.64E2
I-133	3.56E6	3.54E6	9.80E9	1.18E10
I-135	6.96E5	3.67E6	2.27E7	2.68E7
Hf-181	6.73E5	4.02E8	6.55E5	7.86E4
Am-241	4.41E5	4.96E7	6.01E7	7.21E6

*Units are mrem/yr per $\mu Ci/m^3$ for H-3 and the inhalation pathway and mrem/yr per $\mu Ci/sec$ per m^{-2} for the food and ground plane pathways.

3.3 COMPLIANCE WITH 10CFR50 (GASEOUS)

3.3.1 Noble Gases

1. Cumulation of Doses

Section II.B.1 of Appendix I of 10CFR50 limits the releases of gaseous effluents from each reactor such that the estimated annual gamma air dose is limited to 10 millirad and the beta air dose is limited to 20 millirad. Based upon NUREG 0133, the air dose in the unrestricted area due to noble gases released in gaseous effluents can be determined by the following expressions:

During any calendar quarter, for gamma radiation:

$$3.17 \times 10^{-8} \Sigma_i \left\{ M_i \left[\overline{(\chi/Q)_v} Q_{i_v} + \overline{(\chi/q)_v} q_{i_v} \right] + B_i Q_{i_s} + b_i q_{i_s} \right\} \leq 5 \text{ mrad} \qquad (3.3\text{-}1)$$

During any calendar quarter, for beta radiation:

$$3.17 \times 10^{-8} \Sigma_i N_i \left[\overline{(\chi/Q)_v} Q_{i_v} + \overline{(\chi/q)_v} q_{i_v} + \overline{(\chi/Q)_s} Q_{i_s} + \overline{(\chi/q)_s} q_{i_s} \right] \leq 10 \text{ mrad} \qquad (3.3\text{-}2)$$

During any calendar year, for gamma radiation:

$$3.17 \times 10^{-8} \Sigma_i \left\{ M_i \left[\overline{(\chi/Q)_v} Q_{i_v} + \overline{(\chi/q)_v} q_{i_v} \right] + B_i Q_{i_s} + b_i q_{i_s} \right\} \leq 10 \text{ mrad} \qquad (3.3\text{-}3)$$

During any calendar year, for beta radiation:

$$3.17 \times 10^{-8} \Sigma_i N_i \left[\overline{(\chi/Q)_v} Q_{i_v} + \overline{(\chi/q)_v} q_{i_v} + \overline{(\chi/Q)_s} Q_{i_s} + \overline{(\chi/q)_s} q_{i_s} \right] \leq 20 \text{ mrad} \qquad (3.3\text{-}4)$$

Where:

M_i = The air dose factor due to gamma emissions for each identified noble gas radionuclide i, mrad/year per $\mu Ci/m^3$

N_i = The air dose factor due to beta emissions for each identified noble gas radionuclide i, mrad/year per $\mu Ci/m^3$

$\overline{(\chi/Q)_v}$ = The annual average relative concentration for areas at or beyond the unrestricted area boundary for long-term vent releases (greater than 500 hrs/year), sec/m^3

$\overline{(\chi / q)_v}$ = The relative concentration for areas at or beyond the unrestricted area boundary for short-term vent releases (equal to or less than 500 hours/year), sec/m^3

$\overline{(\chi / Q)_s}$ = The annual average relative concentration for areas at or beyond the unrestricted area boundary for long-term, free-standing stack releases (greater than 500 hours/year), sec/m^3

$\overline{(\chi / q)_s}$ = The relative concentration for areas at or beyond the unrestricted area boundary for short-term, free-standing stack releases (equal to or less than 500 hours year), sec/m^3

q_{i_s} = The average release of noble gas radionuclide i in gaseous effluents for short-term stack releases (equal to or less than 500 hours/year), μCi

q_{i_v} = The average release of noble gas radionuclide i in gaseous effluents for short-term vent releases (equal to or less than 500 hours/year), μCi

Q_{i_s} = The average release of noble gas radionuclide i in gaseous effluents for long-term, free-standing stack releases (greater than 500 hours/year), μCi

Q_{i_v} = The average release of noble gas radionuclide i in gaseous effluents for long-term vent releases (greater than 500 hours/year), μCi

B_i = The constant for long-term releases (greater than 500 hours/year) for each identified noble gas radionuclide i accounting for the gamma radiation from the elevated finite plume, mrad/year per μCi/sec

b_i = The constant for short-term releases (equal to or less than 500 hours/year) for each identified noble gas radionuclide i accounting for the gamma radiation from the elevated finite plume, mrad/year per μCi/sec

3.17×10^{-8} = The inverse of the number of seconds in a year

For BSEP all releases are considered long-term. The incorporation of the stack, Reactor Building, and Turbine Building release points into Expressions 3.3-1 through 3.3-4 results in the following expressions for two units to show compliance with 10CFR50.

During any calendar quarter or year:

Gamma radiation:

$$3.17 \times 10^{-8} \Sigma_i \left\{ M_i \left[\overline{(\chi/Q)_{rb}} (Q_{irb1} + Q_{irb2}) + \overline{(\chi/Q)_{tb}} (Q_{itb1} + Q_{itb2}) \right] + B_i Q_{is} \right\}$$

$\leq$ 10 mrad per quarter or 20 mrad per year

(3.3-5)

Beta radiation:

$$3.17 \times 10^{-8} \Sigma_i N_i \left[\overline{(\chi/Q)_{rb}} (Q_{irb1} + Q_{irb2}) + \overline{(\chi/Q)_{tb}} (Q_{itb1} + Q_{itb2}) + \overline{(\chi/Q)_s} Q_{is} \right]$$

$\leq$ 20 mrad per quarter or 40 mrad per year

(3.3-6)

Where:

$\overline{(\chi/Q)_{rb}}$ = Annual average relative concentration for releases from the Reactor Building, sec/m^3

$\overline{(\chi/Q)_{tb}}$ = Annual average relative concentration for releases from the Turbine Building, sec/m^3

$\overline{(\chi/Q)_s}$ = Annual average relative concentration for releases from the stack, sec/m^3

$Q_{i\,rb1}$, $Q_{i\,rb2}$ = Release of radionuclide i from Reactor Buildings 1 and 2, respectively, µCi

$Q_{i\,tb1}$, $Q_{i\,tb2}$ = Release of radionuclide i from Turbine Buildings 1 and 2, respectively, µCi

Q_{is} = Release of radionuclide i from the stack, µCi

At BSEP, the limiting location for noble gases is 0.7 miles NE. Substitution of the appropriate χ/Q values into Expressions 3.3-5 and 3.3-6 results in the following:

During any calendar quarter or year:

Gamma radiation:

$$3.17 \times 10^{-8} \Sigma_i \left\{ M_i \left[2.0 \times 10^{-7} (Q_{i_{rb1}} + Q_{i_{rb2}}) + 2.9 \times 10^{-6} (Q_{i_{tb1}} + Q_{i_{tb2}}) \right] + B_i Q_{i_s} \right\}$$

$\leq$ 10 mrad per quarter or 20 mrad per year

(3.3-7)

Beta radiation:

$$3.17 \times 10^{-8} \Sigma_i N_i \left[2.0 \times 10^{-7} (Q_{i_{rb1}} + Q_{i_{rb2}}) + 2.9 \times 10^{-6} (Q_{i_{tb1}} + Q_{i_{tb2}}) + 2.5 \times 10^{-8} Q_{i_s} \right]$$

$\leq$ 20 mrad per quarter or 40 mrad per year

(3.3-8)

The determination of the controlling locations for implementation of 10CFR50 is a function of parameters such as radionuclide mix, isotopic release, and meteorology.

The incorporation of these parameters into Expressions 3.3-1 through 3.3-4 resulted in the expressions for the controlling locations as presented in Expressions 3.3-7 and 3.3-8. The radionuclide mix was based upon source terms calculated using the NRC GALE Code and is presented in Table 3.2-1 as a function of release point.

The two or three highest site boundary $\overline{(\chi / Q)}$ values for each release point were utilized in conjunction with the radionuclide mix and release for each release point to determine the controlling site boundary location. Since mixed mode and elevated releases occur from BSEP and their maximum χ/Q values may not decrease with distance (i.e., the site boundary may not have the highest χ/Q values); χ/Q values were calculated at the midpoint of 10 standard distance intervals out to a distance of 5 miles. The two or three highest χ/Q values were considered in conjunction with the radionuclide mix and releases to determine the controlling location.

In the determination of the controlling location, annual average χ/Q values are utilized. These values are presented in tables in Appendix A. χ/Q values at the limiting site boundary location for releases from the Turbine Buildings, Reactor Buildings, and stack were obtained from Tables A-1, A-7, and A-13, respectively, of Appendix A. A description of the derivation of χ/Q values is also presented in Appendix A.

A particular combination of release point mix and meteorology dominates in the determination of the controlling location. For BSEP the controlling release point is the stack. The dominate factor in determining a control location becomes the B_i values. The NE sector at the site boundary is the control location because of its higher B_i values.

Values for M_i and N_i, which were used in the determination of the controlling location and which are to be used by BSEP in Expressions 3.3-7 and 3.3-8 to show compliance with 10CFR50 were presented in Table 3.2-4. These values originate from NUREG 0472, Revision 0, and were taken from Table B-1 of NRC Regulatory Guide 1.109, Revision 1. The values have been multiplied by 10^6 to convert from picocuries to microcuries.

The following relationship should hold for BSEP to show compliance with ODCM Specification 7.3.8.

For the calendar quarter:

$$D\gamma \leq 10\text{mrad} \quad (3.3\text{-}9)$$

$$D\beta \leq 20\text{mrad} \quad (3.3\text{-}10)$$

For the calendar year:

$$D\gamma \leq 20\text{mrad} \quad (3.3\text{-}11)$$

$$D\beta \leq 40\text{mrad} \quad (3.3\text{-}12)$$

Where:

$D\gamma$ = The air dose from gamma radiation, mrad

$D\beta$ = The air dose from beta radiation, mrad

The quarterly limits given above represent one-half the annual design objective of Section II.B.1 of Appendix I of 10CFR50. If any of the limits of Expressions 3.3-9 through 3.3-12 are exceeded, a special report pursuant to Section IV.A of Appendix I of 10CFR50 must be filed with the NRC.

3.3.2 I-131, I-133, Particulates, and Tritium*

1. Cumulation of Doses

Section II.C of Appendix I of 10CFR50 limits the release of radioiodines and radioactive material in particulate form from each reactor such that estimated dose or dose commitment to an individual in an unrestricted area from all pathways of exposure is not in excess of 15 mrem to any organ. Based upon NUREG 0133, the dose to an organ of an individual from radioiodines and particulates, with half-lives greater than 8 days in gaseous effluents released to unrestricted areas, can be determined by the following expression:

During any calendar quarter or year:

$$3.17 \times 10^{-8} \Sigma_i R_i (W_s Q_{i_s} + w_s q_{i_s} + W_v Q_{v_s} + w_v q_{i_v}) \leq 7.5 \text{ mrem per quarter or } 15 \text{ mrem per calendar year} \quad (3.3\text{-}13)$$

Where:

Q_{i_s} = Release of radionuclide i for long-term, free-standing stack releases (greater than 500 hours/year), μCi

Q_{i_v} = Release of radionuclide i for long-term vent releases (greater than 500 hours/year), μCi

q_{i_s} = Release of radionuclide i for short-term, free-standing stack releases (equal to or less than 500 hours/year), μCi

q_{i_v} = Release of radionuclide i for short-term vent releases (equal to or less than 500 hours/year), μCi

W_s = Dispersion parameter for estimating dose to an individual at the controlling location for long-term, free-standing stack releases (greater than 500 hours/year)

= sec/m^3 for the inhalation pathway and tritium

= $meters^{-2}$ for the food and ground plane pathway

*For ODCM calculations performed to comply with ODCM TRs 7.3.7.2 and 7.3.9.1, the I-133 values used are determined by actual analysis.

W_v = The dispersion parameter for estimating the dose to an individual at the controlling location for long-term vent releases (greater than 500 hours/year)

= sec/m^3 for the inhalation pathway and tritium

= $meters^{-2}$ for the food and ground plane pathway

w_s = Dispersion parameter for estimating the dose to an individual at the controlling location for short-term stack releases (equal to or less than 500 hours/year)

= sec/m^3 for the inhalation pathway and tritium

= $meters^{-2}$ for the food and ground plane pathway

w_v = The dispersion parameter for estimating the dose to an individual at the controlling location for short-term vent releases (equal to or less than 500 hours/year)

= sec/m^3 for the inhalation pathway and tritium

= $meters^{-2}$ for the food and ground plane pathway

3.17×10^{-8} = The inverse of the number of seconds in a year

R_i = The dose factor for each identified radionuclide i of the organ of interest, mrem/yr per μCi/sec per m^{-2} or mrem/yr per μCi/m^3

Radioiodines, particulates, and tritium may be released from the stack, Reactor Buildings, and Turbine Buildings at BSEP. Radioiodines and particulates, may also be released from other sources such as decontamination facility in the Hot Shop and burning of waste oil in the incinerator. Effluents from the decontamination facilities in the Radioactive Materials Container and Storage Building and hot shop, incinerator and any building exfiltration are combined with the Turbine Building's vent releases. Burning waste oil in the incinerator is limited to 0.1% of 10CFR50 Appendix I (see Appendix H for methodology and calculations). At BSEP all releases are considered long-term in duration. Therefore, incorporating the various release points into Expression 3.3-13 results in the following expression to show compliance with 10CFR50 for a particular organ:

$$3.17 \times 10^{-8} \Sigma_i R_i \left[W_s Q_{i_s} + W_{rb} (Q_{i_{rb1}} + Q_{i_{rb2}}) + W_{tb} (Q_{i_{tb1}} + Q_{i_{tb2}})\right] \leq 15.0 \text{ mrem per quarter or } 30 \text{ mrem per year} \quad (3.3\text{-}14)$$

Where:

W_s = Dispersion parameter for releases from the stack

W_{rb} = Dispersion parameter for releases from the Reactor Building

W_{tb} = Dispersion parameter for releases from the Turbine Building

Q_{i_s} = Release of radionuclide i from the stack, μCi

$Q_{i_{rb1}}, Q_{i_{rb2}}$ = Release of radionuclide i from Reactor Buildings 1 and 2, respectively, μCi

$Q_{i_{tb1}}, Q_{i_{tb2}}$ = Release of radionuclide i from Turbine Buildings 1 and 2, respectively, μCi

In determining the dose at a particular location, W (as in Section 3.2.2) is a function of the pathway. For the food and ground plane pathway, W is in terms of D/Q. If the inhalation pathway is considered, W is in terms of χ/Q. Incorporation of the various pathways into Expression 3.3-14 results in the following:

$$3.17 \times 10^{-8} \Sigma_i$$
$$\{(R_{iG} + R_{iM} + R_{iV} + R_{iB}) [\overline{(D/Q)_s} Q_{i_s} + \overline{(D/Q)_{rb}} (Q_{i_{rb1}} + Q_{i_{rb2}}) + \overline{(D/Q)_{tb}} (Q_{i_{tb1}} + Q_{i_{tb2}})] +$$
$$R_{i_I} [\overline{(\chi/Q)_s} Q_{i_s} + \overline{(\chi/Q)_{rb}} (Q_{i_{rb1}} + Q_{i_{rb2}}) + \overline{(\chi/Q)_{tb}} (Q_{i_{tb1}} + Q_{i_{tb2}})]\}$$
$$\leq 15 \text{ mrem (per quarter) or } 30 \text{ mrem (per year)} \qquad (3.3\text{-}15)$$

Where:

R_{iG} = Dose factor for an organ for radionuclide i for the ground plane exposure pathway, mrem/yr per μCi/sec per m^{-2}

R_{iM} = Dose factor for an organ for radionuclide i for either the cow milk or goat milk pathway, mrem/yr per μCi/sec per m^{-2}

R_{iV} = Dose factor for an organ for radionuclide i for the vegetable pathway, mrem/yr per μCi/sec per m^{-2}

R_{iB} = Dose factor for an organ for radionuclide i for the meat pathway. mrem/yr per μCi/sec per m^{-2}

R_{ii} = Dose factor for an organ for radionuclide i for the inhalation pathway, mrem/yr per μCi/m^3

$\overline{(D/Q)_{rb}}$ = Annual average deposition for releases from the Reactor Buildings, m^{-2}

$\overline{(D/Q)_{tb}}$ = Annual average deposition for releases from the Turbine Buildings, m^{-2}

$\overline{(D/Q)_s}$ = Annual average deposition for releases from the stack, m^{-2}

As discussed in Section 3.2.2, for tritium the parameter W for the food pathway is based upon χ/Q. The ground plane pathway is not appropriate for tritium. Therefore, the left-hand portion of Expression 3.3-15 may be modified for tritium as:

For tritium:

$$D_T = \frac{3.17 \times 10^{-8}(R_{T_M} + R_{T_V} + R_{T_B} + R_{T_I})}{\left[\overline{(\chi/Q)_s}\, Q_{T_s} + \overline{(\chi/Q)_{rb}}(Q_{T_{rb1}} + Q_{T_{rb2}}) + \overline{(\chi/Q)_{tb}}(Q_{T_{tb1}} + Q_{T_{tb2}})\right]} \quad (3.3\text{-}16)$$

Where:

D_T = Dose resulting from tritium, mrem

R_{T_M} = Dose factor for an organ for tritium for the milk pathway, mrem/yr per μCi/m^3

R_{T_V} = Dose factor for an organ for tritium for the vegetable pathway, mrem/yr per $\mu Ci/m^3$

R_{T_B} = Dose factor for an organ for tritium for the beef pathway, mrem/yr per $\mu Ci/m^3$

R_{T_I} = Dose factor for an organ for tritium for the inhalation pathway, mrem/yr per $\mu Ci/m^3$

Q_{T_s} = Release of tritium from the stack, μCi

$Q_{T_{rb1}}$, $Q_{T_{rb2}}$ = Release of tritium from Reactor Buildings 1 and 2, respectively, μCi

$Q_{T_{tb1}}$, $Q_{T_{tb2}}$ = Release of tritium from Turbine Buildings 1 and 2, respectively, μCi

To show compliance with 10CFR50, Expression 3.3-15 is evaluated at the controlling pathway location. At BSEP the controlling location is a milk cow 4.75 miles in the NE sector. Expression 3.3-15 becomes:

$$3.17 \times 10^{-8} \Sigma_i$$
$$\{(R_{i_G} + R_{i_M}) [2.2 \times 10^{-10} Q_{i_s} + 2.7 \times 10^{-10} (Q_{i_{rb1}} + Q_{i_{rb2}}) + 5.7 \times 10^{-10} (Q_{i_{tb1}} + Q_{i_{tb2}})] +$$
$$R_{i_I} [2.4 \times 10^{-8} Q_{i_s} + 4.1 \times 10^{-8} (Q_{i_{rb1}} + Q_{i_{rb2}}) + 1.4 \times 10^{-7} (Q_{i_{tb1}} + Q_{i_{tb2}})]\}$$
$$\leq 15 \text{ mrem / quarter or } 30 \text{ mrem / year} \qquad (3.3\text{-}17)$$

For tritium, Equation 3.3-16 reduces to:

$$D_T = 3.17 \times 10^{-8} (R_{T_M} + R_{T_I}) \left[2.4 \times 10^{-8} Q_{T_s} + 4.1 \times 10^{-8} (Q_{T_{rb1}} + Q_{T_{rb2}}) + 1.4 \times 10^{-7} (Q_{T_{tb1}} + Q_{T_{tb2}})\right] \qquad (3.3\text{-}18)$$

The determination of a controlling location for implementation of 10CFR50 for radioiodines and particulates is a function of:

a. Radionuclide mix and isotopic release

b. Meteorology

c. Exposure pathway

d. Receptor's age

The incorporation of these parameters into Expression 3.3-14 results in the respective equations at the controlling location.

In the determination of the controlling location, the radionuclide mix of radioiodines and particulates was based upon the source terms calculated using the GALE code. This mix was presented in Table 3.2-1 as a function of release point.

In the determination of the controlling location, all of the exposure pathways, as presented in Table 3.2-2, were evaluated. These include cow milk, goat milk, beef and vegetable ingestion, and inhalation ground plane exposure. An infant was assumed to be present at all milk pathway locations. A child was assumed to be present at all vegetable garden and beef animal locations. The ground plane exposure pathway was only considered to be present where an infant was not present. Naturally, inhalation was present everywhere an individual was present.

For the determination of the controlling location, the highest D/Q values for each release point and release mode for the vegetable garden, cow milk, and goat milk pathways were selected. At BSEP, no cow milk or goat milk pathways are present. In accordance with NUREG 0133, dose to a "hypothetical" cow milk pathway located 4.75 miles NE was evaluated against existing vegetable garden pathways. The thyroid dose was calculated at each of these locations using the radionuclide mix and releases of Table 3.2-1. Based upon these calculations, it was determined that the controlling receptor pathway is the "hypothetical" cow milk-infant pathway in the NE sector, at 4.75 miles.

Tables 3.3-1 through 3.3-19 present R_i values for the total body, GI tract, bone, liver, kidney, thyroid, and lung organs for the ground plane, inhalation, cow milk, goat milk, and vegetable and meat ingestion pathways for the infant, child, teen, and adult age groups as appropriate to the pathways. These values were calculated using the methodology described in NUREG 0133 using a grazing period of eight months. A discussion of their calculation is presented in Appendix C.

In the determination of the controlling location annual average $\overline{D/Q}$ and $\overline{\chi/Q}$ values are utilized. D/Q values at the limiting real pathway locations for releases from the Turbine Buildings, Reactor Buildings, and the stack were obtained from Tables A-3, A-9, and A-15, respectively, of Appendix A. χ/Q values at the same location for these same release points were obtained from Tables A-1, A-7, and A-13 of Appendix A. A description of the derivation of the various χ/Q and D/Q values is presented in Appendix A.

Long-term $\overline{D/Q}$ values for the stack, Reactor Buildings, and Turbine Buildings are provided for the midpoints of the following distances:

0.0-0.5 mi.	0.5-1.0 mi.	1.0-1.5 mi.	1.5-2.0 mi.
2.0-2.5 mi.	2.5-3.0 mi.	3.0-3.5 mi.	3.5-4.0 mi.
4.0-4.5 mi.	4.5-5.0 mi.		

These values appear in tables in Appendix A. These tables may be utilized if an additional special location arises which is different from one presented in the special locations of Appendix A.

The following relationships should hold for BSEP to show compliance with BSEP ODCM Specification 7.3.9.

For the calendar quarter:

$$D\tau \leq 15 \text{ mrem} \qquad (3.3\text{-}19)$$

For the calendar year:

$$D\tau \leq 30 \text{ mrem} \qquad (3.3\text{-}20)$$

Where:

$D\tau$ = The dose to any organ τ from radioiodines and particulates, mrem

The quarterly limits given above represent one-half the annual design objective of Section II.C of Appendix I of 10CFR50. If any of the limits of Expressions 3.3-19 or 3.3-20 are exceeded, a special report pursuant to Section IV.A of Appendix I of 10CFR50 must be filed with the NRC.

2. Projection of Doses

Dose projections for this section are required at least once per 31 days in ODCM TR 7.3.11.2.

The doses will be projected using Expressions 3.3-17. When the operational conditions are expected to be the same as for the current month, the source term inputs into the equation for the projection can be taken directly from the current month's data. Where possible, credit for expected operational evolutions (i.e., outages, etc.) should be taken in the dose projections. This may be accomplished by using projected reactor-days of operation. For example:

If Unit 1 had 28 reactor-days of operation and the dose to the bone was 0.05 mrem (remember there are 6 organs to consider) and Unit 2 was down at 0 reactor-days, then obtain from Planning & Scheduling the projected number of reactor-days for both Units 1 and 2 in the upcoming month. Suppose that the projected reactor-days for Unit 1 will be 10 reactor-days and for Unit 2, 21 reactor-days. To calculate the projected dose "x":

$$\frac{28/2 + 0/2}{0.05} = \frac{10/2 + 21/2}{x}$$

$x = 0.06$ mrem to the bone

This projected dose to the bone is less than 0.6 mrem dose limit to any organ. If the dose to the bone or any other organ exceeds 0.6 mrem, the Turbine Building ventilation exhaust treatment system must be operational in the ensuing month.

TABLE 3.3-1 R VALUES FOR THE BRUNSWICK STEAM ELECTRIC PLANT*

PATHWAY = Ground

Nuclide	T. Body	GI-Tract	Bone	Liver	Kidney	Thyroid	Lung	Skin
CR 51	4.66E 06	4.66E 06	4.66E 06	4.66E 06	4.66E 06	4.66E 06	4.66E 06	5.51E 06
MN 54	1.34E 09	1.34E 09	1.34E 09	1.34E 09	1.34E 09	1.34E 09	1.34E 09	1.57E 09
FE 59	2.75E 08	2.75E 08	2.75E 08	2.75E 08	2.75E 08	2.75E 08	2.75E 08	3.23E 08
CO 58	3.79E 08	3.79E 08	3.79E 08	3.79E 08	3.79E 08	3.79E 08	3.79E 08	4.44E 09
CO 60	2.15E 10	2.15E 10	2.15E 10	2.15E 10	2.15E 10	2.15E 10	2.15E 10	2.52E 10
ZN 65	7.49E 08	7.49E 08	7.49E 08	7.49E 08	7.49E 08	7.49E 08	7.49E 08	8.61E 08
RB 86	8.99E 06	8.99E 06	8.99E 06	8.99E 06	8.99E 06	8.99E 06	8.99E 06	1.03E 07
SR 89	2.23E 04	2.23E 04	2.23E 04	2.23E 04	2.23E 04	2.23E 04	2.23E 04	2.58E 04
Y 91	1.08E 06	1.08E 06	1.08E 06	1.08E 06	1.08E 06	1.08E 06	1.08E 06	1.22E 06
ZR 95	2.49E 08	2.49E 08	2.49E 08	2.49E 08	2.49E 08	2.49E 08	2.49E 08	2.89E 08
NB 95	1.36E 08	1.36E 08	1.36E 08	1.36E 08	1.36E 08	1.36E 08	1.36E 08	1.60E 08
RU103	1.09E 08	1.09E 08	1.09E 08	1.09E 08	1.09E 08	1.09E 08	1.09E 08	1.27E 08
RU106	4.19E 08	4.19E 08	4.19E 08	4.19E 08	4.19E 08	4.19E 08	4.19E 08	5.03E 08
AG110M	3.48E 09	3.48E 09	3.48E 09	3.48E 09	3.48E 09	3.48E 09	3.48E 09	4.06E 09
SN113	1.44E 07	6.28E 06	1.22E 07	6.21E 06	1.00E 07	1.33E 07	8.14E 06	4.09E 07
TE127M	9.15E 04	9.15E 04	9.15E 04	9.15E 04	9.15E 04	9.15E 04	9.15E 04	1.08E 05
TE129M	2.00E 07	2.00E 07	2.00E 07	2.00E 07	2.00E 07	2.00E 07	2.00E 07	2.34E 07
I 131	1.72E 07	1.72E 07	1.72E 07	1.72E 07	1.72E 07	1.72E 07	1.72E 07	2.09E 07
I 132	1.24E 06	1.24E 06	1.24E 06	1.24E 06	1.24E 06	1.24E 06	1.24E 06	1.46E 06
I 133	2.47E 06	2.47E 06	2.47E 06	2.47E 06	2.47E 06	2.47E 06	2.47E 06	3.00E 06
I 135	2.56E 06	2.56E 06	2.56E 06	2.56E 06	2.56E 06	2.56E 06	2.56E 06	2.99E 06
CS134	6.82E 09	6.82E 09	6.82E 09	6.82E 09	6.82E 09	6.82E 09	6.82E 09	7.96E 09
CS136	1.49E 08	1.49E 08	1.49E 08	1.49E 08	1.49E 08	1.49E 08	1.49E 08	1.69E 08
CS137	1.03E 10	1.03E 10	1.03E 10	1.03E 10	1.03E 10	1.03E 10	1.03E 10	1.20E 10
BA140	2.05E 07	2.05E 07	2.05E 07	2.05E 07	2.05E 07	2.05E 07	2.05E 07	2.34E 07
CE141	1.36E 07	1.36E 07	1.36E 07	1.36E 07	1.36E 07	1.36E 07	1.36E 07	1.53E 07
CE144	6.95E 07	6.95E 07	6.95E 07	6.95E 07	6.95E 07	6.95E 07	6.95E 07	8.03E 07
HF181	1.97E 08	1.63E 08	2.30E 08	1.70E 08	1.76E 08	2.33E 08	1.82E 08	2.82E 08
AM-241	5.16E 08	5.16E 08	5.16E 08	5.16E 08	5.16E 08	5.16E 08	5.16E 08	7.45E 08

*R Values in units of mrem/yr per $\mu Ci/m^3$ for inhalation and tritium, and in units of m^2-mrem/yr per $\mu Ci/sec$ for all others.

TABLE 3.3-2 R VALUES FOR THE BRUNSWICK STEAM ELECTRIC PLANT*

PATHWAY = Vegetable

AGE GROUP = Adult

Nuclide	T. Body	GI-Tract	Bone	Liver	Kidney	Thyroid	Lung	Skin
H 3	2.28E 03	2.28E 03	0.00E 01	2.28E 03	2.28E 03	2.28E 03	2.28E 03	2.28E 03
P 32	5.91E 07	1.72E 08	1.53E 09	9.51E 07	0.00E 01	0.00E 01	0.00E01	0.00E 01
CR 51	4.60E 04	1.16E 07	0.00E 01	0.00E 01	1.01E 04	2.75E 04	6.10E 04	0.00E 01
MN 54	5.83E 07	9.36E 08	0.00E 01	3.05E 08	9.09E 07	0.00E 01	0.00E 01	0.00E 01
FE 59	1.12E 08	9.75E 08	1.24E 08	2.93E 08	0.00E 01	0.00E 01	8.17E 07	0.00E 01
CO 58	6.71E 07	6.07E 08	0.00E 01	2.99E 07	0.00E 01	0.00E 01	0.00E 01	0.00E 01
CO 60	3.67E 08	3.12E 09	0.00E 01	1.66E 08	0.00E 01	0.00E 01	0.00E 01	0.00E 01
ZN 65	5.77E 08	8.04E 08	4.01E 08	1.28E 09	8.54E 08	0.00E 01	0.00E 01	0.00E 01
RB 86	1.03E 08	4.36E 07	0.00E 01	2.21E 08	0.00E 01	0.00E 01	0.00E 01	0.00E 01
SR 89	2.87E 08	1.60E 09	1.00E 10	0.00E 01	0.00E 01	0.00E 01	0.00E 01	0.00E 01
SR 90	1.64E 11	1.93E 10	6.70E 11	0.00E 01	0.00E 01	0.00E 01	0.00E 01	0.00E 01
Y 91	1.34E 05	2.76E 09	5.01E 06	0.00E 01	0.00E 01	0.00E 01	0.00E 01	0.00E 01
ZR 95	2.51E 05	1.17E 09	1.16E 06	3.71E 05	5.82E 05	0.00E 01	0.00E 01	0.00E 01
NB 95	4.19E 04	4.73E 08	1.40E 05	7.79E 04	7.70E 04	0.00E 01	0.00E 01	0.00E 01
RU103	2.04E 06	5.53E 08	4.74E 06	0.00E 01	1.81E 07	0.00E 01	0.00E 01	0.00E 01
RU106	2.46E 07	1.26E 10	1.94E 08	0.00E 01	3.75E 08	0.00E 01	0.00E 01	0.00E 01
AG110M	6.23E 06	4.28E 09	1.13E 07	1.05E 07	2.06E 07	0.00E 01	0.00E 01	0.00E 01
SN 113	1.36E 07	2.53E 08	1.44E 07	5.60E 05	4.09E 05	1.96E 05	0.00E 01	0.00E 01
TE127M	6.12E 07	1.68E 09	5.02E 08	1.80E 08	2.04E 09	1.28E 08	0.00E 01	0.00E 01
TE129M	4.71E 07	1.50E 09	2.98E 08	1.11E 08	1.24E 09	1.02E 08	0.00E 01	0.00E 01
I 131	6.61E 07	3.04E 07	8.07E 07	1.15E 08	1.98E 08	3.78E 10	0.00E 01	0.00E 01
I 132	5.21E 01	2.80E 01	5.57E 01	1.49E 02	2.37E 02	5.21E 03	0.00E 01	0.00E 01
I 133	1.12E 06	3.30E 06	2.11E 06	3.67E 06	6.40E 06	5.39E 08	0.00E 01	0.00E 01
I 135	3.91E 04	1.20E 05	4.05E 04	1.06E 05	1.70E 05	7.00E 06	0.00E 01	0.00E 01
CS134	8.83E 09	1.89E 08	4.54E 09	1.08E 10	3.49E 09	0.00E 01	1.16E 09	0.00E 01
CS136	1.19E 08	1.88E 07	4.19E 07	1.66E 08	9.21E 07	0.00E 01	1.26E 07	0.00E 01
CS137	5.94E 09	1.76E 08	6.63E 09	9.07E 09	3.08E 09	0.00E 01	1.02E 09	0.00E 01
BA140	8.40E 06	2.64E 08	1.28E 08	1.61E 05	5.47E 04	0.00E 01	9.22E 04	0.00E 01
CE141	1.48E 04	4.99E 08	1.93E 05	1.31E 05	6.07E 04	0.00E 01	0.00E 01	0.00E 01
CE144	1.69E 06	1.06E 10	3.15E 07	1.32E 07	7.80E 06	0.00E 01	0.00E 01	0.00E 01
HF 181	1.08E 06	7.06E 08	9.51E 06	5.36E 04	4.48E 04	3.41E 04	0.00E 01	0.00E 01
AM 241	4.12E 09	5.65E 09	5.75E 10	5.37E 10	3.10E 10	0.00E 01	0.00E 01	0.00E 01

*R Values in units of mrem/yr per $\mu Ci/m^3$ for inhalation and tritium, and in units of m^2-mrem/yr per $\mu Ci/sec$ for all others.

TABLE 3.3-3 R VALUES FOR THE BRUNSWICK STEAM ELECTRIC PLANT*

PATHWAY = Vegetable

AGE GROUP = Teen

Nuclide	T. Body	GI-Tract	Bone	Liver	Kidney	Thyroid	Lung	Skin
H 3	2.61E 03	2.61E 03	0.00E 01	2.61E 03	2.61E 03	2.61E 03	2.61E 03	2.61E 03
P 32	6.80E 07	1.47E 08	1.75E 09	1.09E 08	0.00E 01	0.00E 01	0.00E 01	0.00E 01
CR 51	6.11E 04	1.03E 07	0.00E 01	0.00E 01	1.34E 04	3.39E 04	8.72E 04	0.00E 01
MN 54	8.79E 07	9.09E 08	0.00E 01	4.43E 08	1.32E 08	0.00E 01	0.00E 01	0.00E 01
FE 59	1.60E 08	9.78E 08	1.77E 08	4.14E 08	0.00E 01	0.00E 01	1.30E 08	0.00E 01
CO 58	9.79E 07	5.85E 08	0.00E 01	4.25E 07	0.00E 01	0.00E 01	0.00E 01	0.00E 01
CO 60	5.57E 08	3.22E 09	0.00E 01	2.47E 08	0.00E 01	0.00E 01	0.00E 01	0.00E 01
ZN 65	8.68E 08	7.88E 08	5.36E 08	1.86E 09	1.19E 09	0.00E 01	0.00E 01	0.00E 01
RB 86	1.30E 08	4.09E 07	0.00E 01	2.76E 08	0.00E 01	0.00E 01	0.00E 01	0.00E 01
SR 89	4.36E 08	1.81E 09	1.52E 10	0.00E 01	0.00E 01	0.00E 01	0.00E 01	0.00E 01
SR 90	2.05E 11	2.33E 10	8.32E 11	0.00E 01	0.00E 01	0.00E 01	0.00E 01	0.00E 01
Y 91	2.06E 05	3.15E 09	7.68E 06	0.00E 01	0.00E 01	0.00E 01	0.00E 01	0.00E 01
ZR 95	3.68E 05	1.23E 09	1.69E 06	5.35E 05	7.86E 05	0.00E 01	0.00E 01	0.00E 01
NB 95	5.77E 04	4.48E 08	1.89E 05	1.05E 05	1.02E 05	0.00E 01	0.00E 01	0.00E 01
RU103	2.90E 06	5.66E 08	6.78E 06	0.00E 01	2.39E 07	0.00E 01	0.00E 01	0.00E 01
RU106	3.93E 07	1.50E 10	3.12E 08	0.00E 01	6.02E 08	0.00E 01	0.00E 01	0.00E 01
AG110M	9.39E 06	4.34E09	1.63E 07	1.54E 07	2.95E 07	0.00E 01	0.00E 01	0.00E 01
SN 113	2.02E 07	2.29E 08	1.91E 07	8.03E 05	5.65E 05	2.63E 05	0.00E 01	0.00E 01
TE127M	9.44E 07	1.98E 09	7.93E 08	2.81E 08	3.22E 09	1.89E 08	0.00E 01	0.00E 01
TE129M	6.79E 07	1.61E 09	4.29E 08	1.59E 08	1.79E 08	1.38E 08	0.00E 01	0.00E 01
I 131	5.77E 07	2.13E 07	7.68E 07	1.07E 08	1.85E 08	3.14E 10	0.00E 01	0.00E 01
I 132	4.72E 01	5.72E 01	5.02E 01	1.31E 02	2.07E 02	4.43E 03	0.00E 01	0.00E 01
I 133	1.01E 06	2.51E 06	1.96E 06	3.32E 06	5.83E 06	4.64E 08	0.00E 01	0.00E 01
I 135	3.49E 04	1.04E 05	3.66E 04	9.42E 04	1.49E 05	6.06E 06	0.00E 01	0.00E 01
CS134	7.54E 09	2.02E 08	6.90E 09	1.62E 10	5.16E 09	0.00E 01	1.97E 09	0.00E 01
CS136	1.13E 08	1.35E 07	4.28E 07	1.68E 08	9.16E 07	0.00E 01	1.44E 07	0.00E 01
CS137	4.90E 09	2.00E 08	1.06E 10	1.41E 10	4.78E 09	0.00E 01	1.86E 09	0.00E 01
BA140	8.88E 06	2.12E 08	1.38E 08	1.69E 05	5.72E 04	0.00E 01	1.14E 05	0.00E 01
CE141	2.12E 04	5.29E 08	2.77E 05	1.85E 05	8.70E 04	0.00E 01	0.00E 01	0.00E 01
CE144	2.71E 06	1.27E 10	5.04E 07	2.09E 07	1.25E 07	0.00E 01	0.00E 01	0.00E 01
HF 181	1.54E 06	6.90E 08	1.38E 07	7.58E 04	6.32E 04	4.63E 04	0.00E 01	0.00E 01
AM 241	4.97E 09	6.80E 09	6.89E 10	6.50E 10	3.72E 10	0.00E 01	0.00E 01	0.00E 01

*R Values in units of mrem/yr per $\mu Ci/m^3$ for inhalation and tritium, and in units of m^2-mrem/yr per $\mu Ci/sec$ for all others.

TABLE 3.3-4 R VALUES FOR THE BRUNSWICK STEAM ELECTRIC PLANT*

PATHWAY = Vegetable

AGE GROUP = Child

Nuclide	T. Body	GI-Tract	Bone	Liver	Kidney	Thyroid	Lung	Skin
H 3	4.04E 03	4.04E 03	0.00E 01	4.04E 03	4.04E 03	4.04E 03	4.04E 03	4.04E 03
P 32	1.42E 08	1.01E 08	3.67E 09	1.72E 08	0.00E 01	0.00E 01	0.00E 01	0.00E 01
CR 51	1.16E 05	6.15E 06	0.00E 01	0.00E 01	1.76E 04	6.44E 04	1.18E 05	0.00E 01
MN 54	1.73E 08	5.44E 08	0.00E 01	6.49E 08	1.82E 08	0.00E 01	0.00E 01	0.00E 01
FE 59	3.17E 08	6.62E 08	3.93E 08	6.36E 08	0.00E 01	0.00E 01	1.84E 08	0.00E 01
CO 58	1.92E 08	3.66E 08	0.00E 01	6.27E 07	0.00E 01	0.00E 01	0.00E 01	0.00E 01
CO 60	1.11E 09	2.08E 09	0.00E 01	3.76E 08	0.00E 01	0.00E 01	0.00E 01	0.00E 01
ZN 65	1.70E 09	4.81E 08	1.03E 09	2.74E 09	1.73E 09	0.00E 01	0.00E 01	0.00E 01
RB 86	2.81E 08	2.94E 07	0.00E 01	4.56E 08	0.00E 01	0.00E 01	0.00E 01	0.00E 01
SR 89	1.03E 09	1.40E 09	3.62E 10	0.00E 01	0.00E 01	0.00E 01	0.00E 01	0.00E 01
SR 90	3.49E 11	1.86E 10	1.38E 12	0.00E 01	0.00E 01	0.00E 01	0.00E 01	0.00E 01
Y 91	4.89E 05	2.44E 09	1.83E 07	0.00E 01	0.00E 01	0.00E 01	0.00E 01	0.00E 01
ZR 95	7.44E 05	8.71E 08	3.80E 06	8.35E 05	1.20E 06	0.00E 01	0.00E 01	0.00E 01
NB 95	1.12E 05	2.91E 08	4.04E 05	1.57E 05	1.48E 05	0.00E 01	0.00E 01	0.00E 01
RU103	5.86E 06	3.94E 08	1.52E 07	0.00E 01	3.84E 07	0.00E 01	0.00E 01	0.00E 01
RU106	9.38E 07	1.17E 10	7.52E 08	0.00E 01	1.02E 09	0.00E 01	0.00E 01	0.00E 01
AG110M	1.87E 07	2.78E 09	3.46E 07	2.34E 07	4.35E 07	0.00E 01	0.00E 01	0.00E 01
SN 113	3.98E 07	1.46E 08	3.64E 07	1.18E 06	8.09E 05	4.82E 05	0.00E 01	0.00E 01
TE127M	2.26E 08	1.54E 09	1.90E 09	5.12E 08	5.42E 09	4.55E 08	0.00E 01	0.00E 01
TE129M	1.55E 08	1.22E 09	9.98E 08	2.79E 08	2.93E 09	3.22E 08	0.00E 01	0.00E 01
I 131	8.16E 07	1.23E 07	1.43E 08	1.44E 08	2.36E 08	4.75E 10	0.00E 01	0.00E 01
I 132	7.53E 01	1.93E 02	8.91E 01	1.64E 02	2.51E 02	7.60E 03	0.00E 01	0.00E 01
I 133	1.67E 06	1.78E 06	3.57E 06	4.42E 06	7.36E 06	8.21E 08	0.00E 01	0.00E 01
I 135	5.54E 04	8.92E 04	6.50E 04	1.17E 05	1.79E 05	1.04E 07	0.00E 01	0.00E 01
CS134	5.40E 09	1.38E 08	1.56E 10	2.56E 10	7.93E 09	0.00E 01	2.84E 09	0.00E 01
CS136	1.43E 08	7.77E 06	8.04E 07	2.21E 08	1.18E 08	0.00E 01	1.76E 07	0.00E 01
CS137	3.52E 09	1.50E 08	2.49E 10	2.39E 10	7.78E 09	0.00E 01	2.80E 09	0.00E 01
BA140	1.61E 07	1.40E 08	2.76E 08	2.42E 05	7.87E 04	0.00E 01	1.44E 05	0.00E 01
CE141	4.75E 04	3.99E 08	6.42E 05	3.20E 05	1.40E 05	0.00E 01	0.00E 01	0.00E 01
CE144	6.49E 06	9.94E 09	1.22E 08	3.81E 07	2.11E 07	0.00E 01	0.00E 01	0.00E 01
HF 181	3.15E 06	3.17E 08	3.13E 07	1.22E 05	9.78E 04	1.03E 05	0.00E 01	0.00E 01
AM 241	7.12E 09	5.34E 09	9.50E 10	8.17E 10	4.35E 10	0.00E 01	0.00E 01	0.00E 01

*R Values in units of mrem/yr per $\mu Ci/m^3$ for inhalation and tritium, and in units of m^2-mrem/yr per $\mu Ci/sec$ for all others.

TABLE 3.3-5 R VALUES FOR THE BRUNSWICK STEAM ELECTRIC PLANT*

PATHWAY = Meat

AGE GROUP = Adult

Nuclide	T. Body	GI-Tract	Bone	Liver	Kidney	Thyroid	Lung	Skin
H 3	3.27E 02	3.27E 02	0.00E 01	3.27E 02	3.27E 02	3.27E 02	3.27E 02	3.27E 02
P 32	1.18E 08	3.43E 08	3.05E 09	1.89E 08	0.00E 01	0.00E 01	0.00E 01	0.00E 01
CR 51	4.27E 03	1.08E 06	0.00E 01	0.00E 01	9.42E 02	2.56E 03	5.67E 03	0.00E 01
MN 54	1.06E 06	1.71E 07	0.00E 01	5.57E 06	1.66E 06	0.00E 01	0.00E 01	0.00E 01
FE 59	1.43E 08	1.25E 09	1.59E 08	3.74E 08	0.00E 01	0.00E 01	1.04E 08	0.00E 01
CO 58	2.43E 07	2.20E 08	0.00E 01	1.08E 07	0.00E 01	0.00E 01	0.00E 01	0.00E 01
CO 60	1.03E 08	8.76E 08	0.00E 01	4.66E 07	0.00E 01	0.00E 01	0.00E 01	0.00E 01
ZN 65	3.58E 08	4.98E 08	2.49E 08	7.91E 08	5.29E 08	0.00E 01	0.00E 01	0.00E 01
RB 86	1.42E 08	6.00E 07	0.00E 01	3.04E 08	0.00E 01	0.00E 01	0.00E 01	0.00E 01
SR 89	5.23E 06	2.92E 07	1.82E 08	0.00E 01	0.00E 01	0.00E 01	0.00E 01	0.00E 01
SR 90	2.02E 09	2.38E 08	8.22E 09	0.00E 01	0.00E 01	0.00E 01	0.00E01	0.00E 01
Y 91	1.80E 04	3.71E 08	6.75E 05	0.00E 01	0.00E 01	0.00E 01	0.00E 01	0.00E 01
ZR 95	2.43E 05	1.14E 09	1.12E 06	3.59E 05	5.64E 05	0.00E 01	0.00E 01	0.00E 01
NB 95	4.12E 05	4.65E 09	1.38E 06	7.66E 05	7.58E 05	0.00E 01	0.00E 01	0.00E 01
RU103	2.72E 07	7.38E 09	6.32E 07	0.00E 01	2.41E 08	0.00E 01	0.00E 01	0.00E 01
RU106	2.19E 08	1.12E 11	1.73E 09	0.00E 01	3.35E 09	0.00E 01	0.00E 01	0.00E 01
AG110M	2.34E 06	1.61E 09	4.27E 06	3.95E 06	7.76E 06	0.00E 01	0.00E 01	0.00E 01
SN 113	2.80E 07	5.19E 08	2.97E 07	1.15E 06	8.40E 05	4.03E 05	0.00E 01	0.00E 01
TE127M	1.00E 08	2.76E 09	8.22E 08	2.94E 08	3.34E 09	2.10E 08	0.00E 01	0.00E 01
TE129M	1.17E 08	3.73E 09	7.40E 08	2.76E 08	3.09E 09	2.54E 08	0.00E 01	0.00E 01
I 131	5.77E 06	2.66E 06	7.04E 06	1.01E 07	1.73E 07	3.30E 09	0.00E 01	0.00E 01
I 133	1.51E-01	4.46E-01	2.85E-01	4.96E-01	8.66E-01	7.29E 01	0.00E 01	0.00E 01
I 135	6.07E-17	1.86E-16	6.28E-17	1.64E-16	2.64E-16	1.08E-14	0.00E 01	0.00E 01
CS134	7.81E 08	1.67E 07	4.01E 08	9.55E 08	3.09E 08	0.00E 01	1.03E 08	0.00E 01
CS136	2.14E 07	3.33E 06	7.53E 06	2.97E 07	1.65E 07	0.00E 01	2.27E 06	0.00E 01
CS137	4.99E 08	1.47E 07	5.57E 08	7.61E 08	2.58E 08	0.00E 01	8.59E 07	0.00E 01
BA140	1.20E 06	3.77E 07	1.83E 07	2.30E 04	7.82E 03	0.00E 01	1.32E 04	0.00E 01
CE141	6.46E 02	2.18E 07	8.42E 03	5.69E 03	2.65E 03	0.00E 01	0.00E 01	0.00E 01
CE144	4.70E 04	2.96E 08	8.75E 05	3.66E 05	2.17E 05	0.00E 01	0.00E 01	0.00E 01
HF 181	1.52E 06	9.97E 08	1.34E 07	7.57E 04	6.33E 04	4.81E 04	0.00E 01	0.00E 01
AM 241	1.80E 07	2.47E 07	2.52E 08	2.35E 08	1.36E 08	0.00E 01	0.00E 01	0.00E 01

*R Values in units of mrem/yr per $\mu Ci/m^3$ for inhalation and tritium, and in units of m^2-mrem/yr per $\mu Ci/sec$ for all others.

TABLE 3.3-6 R VALUES FOR THE BRUNSWICK STEAM ELECTRIC PLANT*

PATHWAY = Meat

AGE GROUP = Teen

Nuclide	T. Body	GI-Tract	Bone	Liver	Kidney	Thyroid	Lung	Skin
H 3	1.95E 02	1.95E 02	0.00E 01	1.95E 02	1.95E 02	1.95E 02	1.95E 02	1.95E 02
P 32	9.98E 07	2.16E 08	2.58E 09	1.60E 08	0.00E 01	0.00E 01	0.00E 01	0.00E 01
CR 51	3.42E 03	5.75E 05	0.00E 01	0.00E 01	7.49E 02	1.90E 03	4.88E 03	0.00E 01
MN 54	8.43E 05	8.72E 06	0.00E 01	4.25E 06	1.27E 06	0.00E 01	0.00E 01	0.00E 01
FE 59	1.15E 08	7.02E 08	1.27E 08	2.97E 08	0.00E 01	0.00E 01	9.36E 07	0.00E 01
CO 58	1.93E 07	1.15E 08	0.00E 01	8.36E 06	0.00E 01	0.00E 01	0.00E 01	0.00E 01
CO 60	8.15E 07	4.71E 08	0.00E 01	3.62E 07	0.00E 01	0.00E 01	0.00E 01	0.00E 01
ZN 65	2.83E 08	2.57E 08	1.75E 08	6.07E 08	3.89E 08	0.00E 01	0.00E 01	0.00E 01
RB 86	1.19E 08	3.76E 07	0.00E 01	2.54E 08	0.00E 01	0.00E 01	0.00E 01	0.00E 01
SR 89	4.40E 06	1.83E 07	1.54E 08	0.00E 01	0.00E 01	0.00E 01	0.00E 01	0.00E 01
SR 90	1.31E 09	1.49E 08	5.32E 09	0.00E 01	0.00E 01	0.00E 01	0.00E 01	0.00E 01
Y 91	1.52E 04	2.33E 08	5.68E 05	0.00E 01	0.00E 01	0.00E 01	0.00E 01	0.00E 01
ZR 95	1.95E 05	6.53E 08	8.97E 05	2.83E 05	4.16E 05	0.00E 01	0.00E 01	0.00E 01
NB 95	3.29E 05	2.55E 09	1.08E 06	5.97E 05	5.79E 05	0.00E 01	0.00E 01	0.00E 01
RU103	2.20E 07	4.30E 09	5.15E 07	0.00E 01	1.82E 08	0.00E 01	0.00E 01	0.00E 01
RU106	1.84E 08	7.00E 10	1.46E 09	0.00E 01	2.81E 09	0.00E 01	0.00E 01	0.00E 01
AG110M	1.86E 06	8.59E 08	3.23E 06	3.06E 06	5.83E 06	0.00E 01	0.00E 01	0.00E 01
SN 113	2.22E 07	2.51E 08	2.09E 07	8.80E 05	6.19E 05	2.89E 05	0.00E 01	0.00E 01
TE127M	8.25E 07	1.73E 09	6.94E 08	2.46E 08	2.81E 09	1.65E 08	0.00E 01	0.00E 01
TE129M	9.81E 07	2.33E 09	6.20E 08	2.30E 08	2.59E 09	2.00E 08	0.00E 01	0.00E 01
I 131	4.40E 06	1.62E 06	5.85E 06	8.20E 06	1.41E 07	2.39E 09	0.00E 01	0.00E 01
I 133	1.23E-01	3.06E-01	2.39E-01	4.05E-01	7.10E-01	5.65E 01	0.00E 01	0.00E 01
I 135	4.88E-17	1.46E-16	5.11E-17	1.32E-16	2.08E-16	8.46E-15	0.00E 01	0.00E 01
CS134	3.48E 08	9.34E 06	3.19E 08	7.51E 08	2.39E 08	0.00E 01	9.11E 07	0.00E 01
CS136	1.55E 07	1.86E 06	5.87E 06	2.31E 07	1.26E 07	0.00E 01	1.98E 06	0.00E 01
CS137	2.14E 08	8.75E 06	4.62E 08	6.15E 08	2.09E 08	0.00E 01	8.13E 07	0.00E 01
BA140	9.76E 05	2.34E 07	1.51E 07	1.86E 04	6.29E 03	0.00E 01	1.25E 04	0.00E 01
CE141	5.42E 02	1.35E 07	7.07E 03	4.72E 03	2.22E 03	0.00E 01	0.00E 01	0.00E 01
CE144	3.96E 04	1.85E 08	7.37E 05	3.05E 05	1.82E 05	0.00E 01	0.00E 01	0.00E 01
HF 181	1.23E 06	5.50E 08	1.10E 07	6.05E 04	5.04E 04	3.69E 04	0.00E 01	0.00E 01
AM 241	1.13E 07	1.55E 07	1.57E 08	1.48E 08	8.49E 07	0.00E 01	0.00E 01	0.00E 01

*R Values in units of mrem/yr per $\mu Ci/m^3$ for inhalation and tritium, and in units of m^2-mrem/yr per $\mu Ci/sec$ for all others.

TABLE 3.3-7 R VALUES FOR THE BRUNSWICK STEAM ELECTRIC PLANT*

PATHWAY = Meat

AGE GROUP = Child

Nuclide	T. Body	GI-Tract	Bone	Liver	Kidney	Thyroid	Lung	Skin
H 3	2.36E 02	2.36E 02	0.00E 01	2.36E 02	2.36E 02	2.36E 02	2.36E 02	2.36E 02
P 32	1.87E 08	1.34E 08	4.86E 09	2.27E 08	0.00E 01	0.00E 01	0.00E 01	0.00E 01
CR 51	5.33E 03	2.83E 05	0.00E 01	0.00E 01	8.09E 02	2.96E 03	5.40E 03	0.00E 01
MN 54	1.30E 06	4.08E 06	0.00E 01	4.86E 06	1.36E 06	0.00E 01	0.00E 01	0.00E 01
FE 59	1.82E 08	3.80E 08	2.25E 08	3.65E 08	0.00E 01	0.00E 01	1.06E 08	0.00E 01
CO 58	2.99E 07	5.70E 07	0.00E 01	9.76E 06	0.00E 01	0.00E 01	0.00E 01	0.00E 01
CO 60	1.27E 08	2.38E 08	0.00E 01	4.30E 07	0.00E 01	0.00E 01	0.00E 01	0.00E 01
ZN 65	4.35E 08	1.23E 08	2.62E 08	6.99E 08	4.40E 08	0.00E 01	0.00E 01	0.00E 01
RB 86	2.21E 08	2.32E 07	0.00E 01	3.60E 08	0.00E 01	0.00E 01	0.00E 01	0.00E 01
SR 89	8.31E 06	1.13E 07	2.91E 08	0.00E 01	0.00E 01	0.00E 01	0.00E 01	0.00E 01
SR 90	1.74E 09	9.26E 07	6.87E 09	0.00E 01	0.00E 01	0.00E 01	0.00E 01	0.00E 01
Y 91	2.87E 04	1.43E 08	1.07E 06	0.00E 01	0.00E 01	0.00E 01	0.00E 01	0.00E 01
ZR 95	3.12E 05	3.65E 08	1.59E 06	3.50E 05	5.01E 05	0.00E 01	0.00E 01	0.00E 01
NB 95	5.17E 05	1.34E 09	1.86E 06	7.23E 05	6.80E 05	0.00E 01	0.00E 01	0.00E 01
RU103	3.58E 07	2.41E 09	9.31E 07	0.00E 01	2.34E 08	0.00E 01	0.00E 01	0.00E 01
RU106	3.43E 08	4.27E 10	2.75E 09	0.00E 01	3.71E 09	0.00E 01	0.00E 01	0.00E 01
AG110M	2.89E 06	4.30E 08	5.36E 06	3.62E 06	6.74E 06	0.00E 01	0.00E 01	0.00E 01
SN 113	3.43E 07	1.25E 08	3.14E 07	1.01E 06	6.97E 05	4.15E 05	0.00E 01	0.00E 01
TE127M	1.55E 08	1.06E 09	1.31E 09	3.52E 08	3.73E 09	3.13E 08	0.00E 01	0.00E 01
TE129M	1.81E 08	1.42E 09	1.17E 09	3.26E 08	3.43E 09	3.77E 08	0.00E 01	0.00E 01
I 131	6.20E 06	9.72E 05	1.09E 07	1.09E 07	1.79E 07	3.61E 09	0.00E 01	0.00E 01
I 133	2.07E-01	2.21E-01	4.43E-01	5.48E-01	9.13E-01	1.02E 02	0.00E 01	0.00E 01
I 135	7.87E-17	1.27E-16	9.25E-17	1.66E-16	2.55E-16	1.47E-14	0.00E 01	0.00E 01
CS 134	1.95E 08	4.93E 06	5.63E 08	9.23E 08	2.86E 08	0.00E 01	1.03E 08	0.00E 01
CS 136	1.80E 07	9.78E 05	1.01E 07	2.78E 07	1.48E 07	0.00E 01	2.21E 06	0.00E 01
CS 137	1.20E 08	5.10E 06	8.51E 08	8.15E 08	2.65E 08	0.00E 01	9.55E 07	0.00E 01
BA 140	1.63E 06	1.42E 07	2.80E 07	2.45E 04	7.97E 03	0.00E 01	1.46E 04	0.00E 01
CE 141	9.86E 02	8.28E 06	1.33E 04	6.64E 03	2.91E 03	0.00E 01	0.00E 01	0.00E 01
CE 144	7.42E 04	1.14E 08	1.39E 06	4.36E 05	2.41E 05	0.00E 01	0.00E 01	0.00E 01
HF 181	2.02E 06	3.31E 08	2.01E07	7.79E 04	6.26E 04	6.56E 04	0.00E 01	0.00E 01
AM 241	1.27E 07	9.49E 06	1.69E 08	1.45E 08	7.74E 07	0.00E 01	0.00E 01	0.00E 01

*R Values in units of mrem/yr per $\mu Ci/m^3$ for inhalation and tritium, and in units of m^2-mrem/yr per μCi/sec for all others.

TABLE 3.3-8 R VALUES FOR THE BRUNSWICK STEAM ELECTRIC PLANT*

PATHWAY = Cow Milk

AGE GROUP = Adult

Nuclide	T. Body	GI-Tract	Bone	Liver	Kidney	Thyroid	Lung	Skin
H 3	7.69E 02	7.69E 02	0.00E-01	7.69E 02	7.69E 02	7.69E 02	7.69E 02	7.69E 02
P 32	4.32E 08	1.26E 09	1.12E 10	6.95E 08	0.00E-01	0.00E-01	0.00E-01	0.00E-01
CR 51	1.73E 04	4.36E 06	0.00E-01	0.00E-01	3.82E 03	1.04E 04	2.30E 04	0.00E-01
MN 54	9.76E 05	1.57E 07	0.00E-01	5.11E 06	1.52E 06	0.00E-01	0.00E-01	0.00E-01
FE 59	1.60E 07	1.39E 08	1.77E 07	4.17E 07	0.00E-01	0.00E-01	1.17E 07	0.00E-01
CO 58	6.28E 06	5.68E 07	0.00E-01	2.80E 06	0.00E-01	0.00E-01	0.00E-01	0.00E-01
CO 60	2.24E 07	1.91E 08	0.00E-01	1.02E 07	0.00E-01	0.00E-01	0.00E-01	0.00E-01
ZN 65	1.38E 09	1.92E 09	9.59E 08	3.05E 09	2.04E 09	0.00E-01	0.00E-01	0.00E-01
RB 86	7.54E 08	3.19E 08	0.00E-01	1.62E 09	0.00E-01	0.00E-01	0.00E-01	0.00E-01
SR 89	2.50E 07	1.40E 08	8.70E 08	0.00E-01	0.00E-01	0.00E-01	0.00E-01	0.00E-01
SR 90	7.59E 09	8.94E 08	3.09E 10	0.00E-01	0.00E-01	0.00E-01	0.00E-01	0.00E-01
Y 91	1.37E 02	2.81E 06	5.11E 03	0.00E-01	0.00E-01	0.00E-01	0.00E-01	0.00E-01
ZR 95	1.22E 02	5.71E 05	5.62E 02	1.80E 02	2.83E 02	0.00E-01	0.00E-01	0.00E-01
NB 95	1.48E 04	1.67E 08	4.95E 04	2.75E 04	2.72E 04	0.00E-01	0.00E-01	0.00E-01
RU 103	2.63E 02	7.14E 04	6.11E 02	0.00E-01	2.33E 03	0.00E-01	0.00E-01	0.00E-01
RU 106	1.60E 03	8.17E 05	1.26E 04	0.00E-01	2.44E 04	0.00E-01	0.00E-01	0.00E-01
AG110M	2.04E 07	1.40E 10	3.71E 07	3.44E 07	6.76E 07	0.00E-01	0.00E-01	0.00E-01
SN 113	1.32E 06	2.44E 07	1.40E 06	5.41E 04	3.96E 04	1.90E 04	0.00E 01	0.00E 01
TE127M	4.11E 06	1.13E 08	3.37E 07	1.21E 07	1.37E 08	8.62E 06	0.00E-01	0.00E-01
TE129M	6.19E 06	1.97E 08	3.91E 07	1.46E 07	1.63E 08	1.34E 07	0.00E-01	0.00E-01
I 131	1.59E 08	7.32E 07	1.94E 08	2.77E 08	4.76E 08	9.09E 10	0.00E-01	0.00E-01
I 132	1.03E-01	5.51E-02	1.10E-01	2.93E-01	4.67E-01	1.03E 01	0.00E-01	0.00E-01
I 133	1.40E 06	4.13E 06	2.64E 06	4.59E 06	8.01E 06	6.75E 08	0.00E-01	0.00E-01
I 135	9.03E 03	2.76E 04	9.34E 03	2.45E 04	3.92E 04	1.61E 06	0.00E-01	0.00E-01
CS 134	6.71E 09	1.44E 08	3.45E 09	3.21E 09	2.66E 09	0.00E-01	8.82E 08	0.00E-01
CS 136	4.73E 08	7.46E 07	1.66E 08	6.57E 08	3.65E 08	0.00E-01	5.01E 07	0.00E-01
CS 137	4.22E 09	1.25E 08	4.71E 09	6.44E 09	2.19E 09	0.00E-01	7.27E 08	0.00E-01
BA 140	1.12E 06	3.53E 07	1.71E 07	2.15E 04	7.32E 03	0.00E-01	1.23E 04	0.00E-01
CE 141	2.23E 02	7.52E 06	2.91E 03	1.97E 03	9.14E 02	0.00E-01	0.00E-01	0.00E-01
CE 144	1.15E 04	7.26E 07	2.15E 05	8.97E 04	5.32E 04	0.00E-01	0.00E-01	0.00E-01
HF 181	6.68E 02	4.39E 05	5.91E 03	3.33E 01	2.79E 01	2.12E 01	0.00E 01	0.00E 01
AM 241	1.27E 06	1.74E 06	1.77E 07	1.66E 07	9.56E 06	0.00E 01	0.00E 01	0.00E 01

*R Values in units of mrem/yr per $\mu Ci/m^3$ for inhalation and tritium, and in units of m^2-mrem/yr per μCi/sec for all others.

TABLE 3.3-9 R VALUES FOR THE BRUNSWICK STEAM ELECTRIC PLANT*

PATHWAY = Cow Milk

AGE GROUP = Teen

Nuclide	T. Body	GI-Tract	Bone	Liver	Kidney	Thyroid	Lung	Skin
H 3	1.00E 03	1.00E 03	0.00E-01	1.00E 03	1.00E 03	1.00E 03	1.00E 03	1.00E 03
P 32	8.00E 08	1.73E 09	2.06E 10	1.28E 09	0.00E-01	0.00E-01	0.00E-01	0.00E-01
CR 51	3.02E 04	5.08E 06	0.00E-01	0.00E-01	6.63E 03	1.68E 04	4.32E 04	0.00E-01
MN 54	1.69E 06	1.75E 07	0.00E-01	8.52E 06	2.54E 06	0.00E-01	0.00E-01	0.00E-01
FE 59	2.79E 07	1.71E 08	3.10E 07	7.23E 07	0.00E-01	0.00E-01	2.28E 07	0.00E-01
CO 58	1.09E 07	6.50E 07	0.00E-01	4.72E 06	0.00E-01	0.00E-01	0.00E-01	0.00E-01
CO 60	3.88E 07	2.25E 08	0.00E-01	1.72E 07	0.00E-01	0.00E-01	0.00E-01	0.00E-01
ZN 65	2.38E 09	2.16E 09	1.47E 09	5.11E 09	3.27E 09	0.00E-01	0.00E-01	0.00E-01
RB 86	1.39E 09	4.37E 08	0.00E-01	2.95E 09	0.00E-01	0.00E-01	0.00E-01	0.00E-01
SR 89	4.59E 07	1.91E 08	1.60E 09	0.00E-01	0.00E-01	0.00E-01	0.00E-01	0.00E-01
SR 90	1.08E 10	1.23E 09	4.37E 10	0.00E-01	0.00E-01	0.00E-01	0.00E-01	0.00E-01
Y 91	2.52E 02	3.85E 06	9.40E 03	0.00E-01	0.00E-01	0.00E-01	0.00E-01	0.00E-01
ZR 95	2.13E 02	7.16E 06	9.83E 02	3.10E 02	4.56E 02	0.00E-01	0.00E-01	0.00E-01
NB 95	2.58E 04	2.00E 08	8.45E 04	4.68E 04	4.54E 04	0.00E-01	0.00E-01	0.00E-01
RU 103	4.65E 02	9.08E 04	1.09E 03	0.00E-01	3.83E 03	0.00E-01	0.00E-01	0.00E-01
RU 106	2.93E 03	1.11E 06	2.32E 04	0.00E-01	4.48E 04	0.00E-01	0.00E-01	0.00E-01
AG110M	3.53E 07	1.63E 10	6.14E 07	5.81E 07	1.11E 08	0.00E-01	0.00E-01	0.00E-01
SN 113	2.28E 06	2.58E 07	2.15E 06	9.06E 04	6.37E 04	2.97E 04	0.00E 04	0.00E 01
TE127M	7.39E 06	1.55E 08	6.22E 07	2.21E 07	2.52E 08	1.48E 07	0.00E-01	0.00E-01
TE129M	1.13E 07	2.69E 08	7.15E 07	2.65E 07	2.99E 08	2.31E 07	0.00E-01	0.00E-01
I 131	2.65E 08	9.75E 07	3.52E 08	4.93E 08	8.48E 08	1.44E 11	0.00E-01	0.00E-01
I 132	1.83E-01	2.22E-01	1.94E-01	5.09E-01	8.02E-01	1.71E 01	0.00E-01	0.00E-01
I 133	2.49E 06	6.19E 06	4.82E 06	8.18E 06	1.43E 07	1.14E 09	0.00E-01	0.00E-01
I 135	1.58E 04	4.74E 04	1.66E 04	4.27E 04	6.75E 04	2.75E 06	0.00E-01	0.00E-01
CS 134	6.54E 09	1.75E 08	5.99E 09	1.41E 10	4.48E 09	0.00E-01	1.71E 09	0.00E-01
CS 136	7.48E 08	8.97E 07	2.83E 08	1.11E 09	6.07E 08	0.00E-01	9.56E 07	0.00E-01
CS 137	3.96E 09	1.62E 08	8.54E 09	1.14E 10	3.87E 09	0.00E-01	1.50E 09	0.00E-01
BA 140	1.99E 06	4.77E 07	3.09E 07	3.79E 04	1.28E 04	0.00E-01	2.55E 04	0.00E-01
CE 141	4.09E 02	1.02E 07	6.33E 03	3.56E 03	1.68E 03	0.00E-01	0.00E-01	0.00E-01
CE 144	2.12E 04	9.93E 07	3.95E 05	1.63E 05	9.76E 04	0.00E-01	0.00E-01	0.00E-01
HF 181	1.18E 03	5.28E 05	1.06E 04	5.81E 01	4.84E 01	3.55E 01	0.00E 01	0.00E 01
AM 241	1.74E 06	2.38E 06	2.42E 07	2.28E 07	1.31E 07	0.00E 01	0.00E 01	0.00E 01

*R Values in units of mrem/yr per $\mu Ci/m^3$ for inhalation and tritium, and in units of m^2-mrem/yr per $\mu Ci/sec$ for all others.

TABLE 3.3-10 R VALUES FOR THE BRUNSWICK STEAM ELECTRIC PLANT*

PATHWAY = Cow Milk

AGE GROUP = Child

Nuclide	T. Body	GI-Tract	Bone	Liver	Kidney	Thyroid	Lung	Skin
H 3	1.58E 03	1.58E 03	0.00E-01	1.58E 03	1.58E 03	1.58E 03	1.58E 03	1.58E 03
P 32	1.96E 09	1.41E 09	5.09E 10	2.38E 09	0.00E-01	0.00E-01	0.00E-01	0.00E-01
CR 51	6.17E 04	3.27E 06	0.00E-01	0.00E-01	9.36E 03	3.42E 04	6.25E 04	0.00E-01
MN 54	3.39E 06	1.07E 07	0.00E-01	1.27E 07	3.57E 06	0.00E-01	0.00E-01	0.00E-01
FE 59	5.79E 07	1.21E 08	7.18E 07	1.16E 08	0.00E-01	0.00E-01	3.37E 07	0.00E-01
CO 58	2.21E 07	4.20E 07	0.00E-01	7.21E 06	0.00E-01	0.00E-01	0.00E-01	0.00E-01
CO 60	7.90E 07	1.48E 08	0.00E-01	2.68E 07	0.00E-01	0.00E-01	0.00E-01	0.00E-01
ZN 65	4.79E 09	1.35E 09	2.89E 09	7.70E 09	4.85E 09	0.00E-01	0.00E-01	0.00E-01
RB 86	3.36E 09	3.52E 08	0.00E-01	5.47E 09	0.00E-01	0.00E-01	0.00E-01	0.00E-01
SR 89	1.13E 08	1.54E 08	3.97E 09	0.00E-01	0.00E-01	0.00E-01	0.00E-01	0.00E-01
SR 90	1.87E 10	9.95E 08	7.38E 10	0.00E-01	0.00E-01	0.00E-01	0.00E-01	0.00E-01
Y 91	6.21E 02	3.09E 06	2.32E 04	0.00E-01	0.00E-01	0.00E-01	0.00E-01	0.00E-01
ZR 95	4.47E 02	5.23E 05	2.28E 03	5.02E 02	7.18E 02	0.00E-01	0.00E-01	0.00E-01
NB 95	5.31E 04	1.37E 08	1.91E 05	7.42E 04	6.98E 04	0.00E-01	0.00E-01	0.00E-01
RU 103	9.88E 02	6.65E 04	2.57E 03	0.00E-01	6.47E 03	0.00E-01	0.00E-01	0.00E-01
RU 106	7.14E 03	8.90E 05	5.72E 04	0.00E-01	7.72E 04	0.00E-01	0.00E-01	0.00E-01
AG110M	7.19E 07	1.07E 10	1.33E 08	9.00E 07	1.68E 08	0.00E-01	0.00E-01	0.00E-01
SN 113	4.61E 06	1.69E 07	4.22E 08	4.13E 07	4.37E 08	3.66E 07	0.00E 01	0.00E 01
TE127M	1.82E 07	1.24E 08	1.53E 08	4.13E 07	4.37E 08	3.66E 07	0.00E-01	0.00E-01
TE129M	2.74E 07	2.15E 08	1.76E 08	4.92E 07	5.18E 08	5.68E 07	0.00E-01	0.00E-01
I 131	4.88E 08	7.64E 07	8.54E 08	8.59E 08	1.41E 09	2.84E 11	0.00E-01	0.00E-01
I 132	3.89E-01	9.95E-01	4.60E-01	8.45E-01	1.29E 00	3.92E 01	0.00E-01	0.00E-01
I 133	5.48E 06	5.84E 06	1.17E 07	1.45E 07	2.41E 07	2.69E 09	0.00E-01	0.00E-01
I 135	3.35E 04	5.39E 04	3.93E 04	7.07E 04	1.08E 05	6.26E 06	0.00E-01	0.00E-01
CS 134	4.78E 09	1.22E 08	1.38E 10	2.27E 10	7.03E 09	0.00E-01	2.52E 09	0.00E-01
CS 136	1.14E 09	6.17E 07	6.39E 08	1.76E 09	9.36E 08	0.00E-01	1.40E 08	0.00E-01
CS 137	2.91E 09	1.23E 08	2.06E 10	1.97E 10	6.42E 09	0.00E-01	2.31E 09	0.00E-01
BA 140	4.36E 06	3.78E 07	7.47E 07	6.54E 04	2.13E 04	0.00E-01	3.90E 04	0.00E-01
CE 141	9.73E 02	8.17E 06	1.31E 04	6.55E 03	2.87E 03	0.00E-01	0.00E-01	0.00E-01
CE 144	5.20E 04	7.96E 07	9.74E 05	3.05E 05	1.69E 05	0.00E-01	0.00E-01	0.00E-01
HF 181	2.53E 03	4.16E 05	2.51E 04	9.79E 01	7.86E 01	8.24E 01	0.00E 01	0.00E 01
AM 241	2.55E 06	1.91E 06	3.40E 07	2.92E 07	1.56E 07	0.00E 01	0.00E 01	0.00E 01

*R Values in units of mrem/yr per $\mu Ci/m^3$ for inhalation and tritium, and in units of m^2-mrem/yr per $\mu Ci/sec$ for all others.

TABLE 3.3-11 R VALUES FOR THE BRUNSWICK STEAM ELECTRIC PLANT*

PATHWAY = Cow Milk

AGE GROUP = Infant

Nuclide	T. Body	GI-Tract	Bone	Liver	Kidney	Thyroid	Lung	Skin
H 3	2.40E 03	2.40E 03	0.00E-01	2.40E 03	2.40E 03	2.40E 03	2.40E 03	2.40E 03
P 32	4.06E 09	1.42E 09	1.05E 11	6.17E 09	0.00E-01	0.00E-01	0.00E-01	0.00E-01
CR 51	9.77E 04	2.85E 06	0.00E-01	0.00E-01	1.39E 04	6.38E 04	1.24E 05	0.00E-01
MN 54	5.37E 06	8.71E 06	0.00E-01	2.37E 07	5.25E 06	0.00E-01	0.00E-01	0.00E-01
FE 59	9.23E 07	1.12E 08	1.34E 08	2.34E 08	0.00E-01	0.00E-01	6.92E 07	0.00E-01
CO 58	3.60E 07	3.59E 07	0.00E-01	1.44E 07	0.00E-01	0.00E-01	0.00E-01	0.00E-01
CO 60	1.29E 08	1.30E 08	0.00E-01	5.47E 07	0.00E-01	0.00E-01	0.00E-01	0.00E-01
ZN 65	6.14E 09	1.12E 10	3.88E 09	1.33E 10	6.45E 09	0.00E-01	0.00E-01	0.00E-01
RB 86	6.86E 09	3.55E 08	0.00E-01	1.39E 10	0.00E-01	0.00E-01	0.00E-01	0.00E-01
SR 89	2.17E 08	1.55E 08	7.55E 09	0.00E-01	0.00E-01	0.00E-01	0.00E-01	0.00E-01
SR 90	2.05E 10	1.00E 09	8.04E 10	0.00E-01	0.00E-01	0.00E-01	0.00E-01	0.00E-01
Y 91	1.16E 08	3.12E 06	4.36E 04	0.00E-01	0.00E-01	0.00E-01	0.00E-01	0.00E-01
ZR 95	7.01E 02	4.92E 05	4.05E 03	9.88E 02	1.06E 03	0.00E-01	0.00E-01	0.00E-01
NB 95	8.48E 04	1.24E 08	3.56E 05	1.47E 05	1.05E 05	0.00E-01	0.00E-01	0.00E-01
RU 103	1.74E 03	6.33E 04	5.21E 03	0.00E-01	1.08E 04	0.00E-01	0.00E-01	0.00E-01
RU 106	1.47E 04	8.95E 05	1.18E 05	0.00E-01	1.39E 05	0.00E-01	0.00E-01	0.00E-01
AG110M	1.19E 08	9.32E 09	2.46E 08	1.80E 08	2.57E 08	0.00E-01	0.00E-01	0.00E-01
SN 113	6.66E 06	1.37E 07	6.46E 06	2.45E 05	1.32E 05	9.34E 04	0.00E 01	0.00E 01
TE127M	3.75E 07	1.25E 08	3.10E 08	1.03E 08	7.64E 08	8.96E 07	0.00E-01	0.00E-01
TE129M	5.57E 07	2.16E 08	3.62E 08	1.24E 08	9.05E 08	1.39E 08	0.00E-01	0.00E-01
I 131	9.23E 08	7.49E 07	1.78E 09	2.10E 09	2.45E 09	6.90E 11	0.00E-01	0.00E-01
I 132	6.90E-01	1.57E-00	9.55E-01	1.94E 00	2.16E 00	9.09E 01	0.00E-01	0.00E-01
I 133	1.05E 07	6.09E 06	2.47E 07	3.60E 07	4.23E 07	6.55E 09	0.00E-01	0.00E-01
I 135	5.93E 04	5.83E 04	8.17E 04	1.63E 05	1.81E 05	1.46E 07	0.00E-01	0.00E-01
CS 134	4.19E 09	1.13E 08	2.23E 10	4.15E 10	1.07E 10	0.00E-01	4.38E 09	0.00E-01
CS 136	1.37E 09	5.58E 07	1.25E 09	3.67E 09	1.46E 09	0.00E-01	2.99E 08	0.00E-01
CS 137	2.72E 09	1.20E 08	3.28E 10	3.84E 10	1.03E 10	0.00E-01	4.18E 09	0.00E-01
BA 140	7.91E 06	3.77E 07	1.54E 08	1.54E 05	3.65E 04	0.00E-01	9.43E 04	0.00E-01
CE 141	1.87E 03	3.21E 06	2.60E 04	1.59E 04	4.90E 03	0.00E-01	0.00E-01	0.00E-01
CE 144	7.82E 04	8.01E 07	1.40E 06	5.71E 05	2.31E 05	0.00E-01	0.00E-01	0.00E-01
HF 181	4.23E 03	3.94E 05	4.78E 04	2.26E 02	1.32E 02	1.91E 02	0.00E 01	0.00E 01
AM 241	2.72E 06	1.92E 06	3.65E 07	3.17E 07	1.64E 07	0.00E 01	0.00E 01	0.00E 01

*R Values in units of mrem/yr per $\mu Ci/m^3$ for inhalation and tritium, and in units of m^2-mrem/yr per $\mu Ci/sec$ for all others.

TABLE 3.3-12 R VALUES FOR THE BRUNSWICK STEAM ELECTRIC PLANT*

PATHWAY = Goat Milk

AGE GROUP = Adult

Nuclide	T. Body	GI-Tract	Bone	Liver	Kidney	Thyroid	Lung	Skin
H 3	1.57E 03	1.57E 03	0.00E-01	1.57E 03	1.57E 03	1.57E 03	1.57E 03	1.57E 03
P 32	5.19E 08	1.51E 09	1.34E 10	8.34E 08	0.00E-01	0.00E-01	0.00E-01	0.00E-01
CR 51	2.08E 03	5.23E 05	0.00E-01	0.00E-01	4.58E 02	1.24E 03	2.76E 03	0.00E-01
MN 54	1.17E 05	1.88E 06	0.00E-01	6.14E 05	1.83E 05	0.00E-01	0.00E-01	0.00E-01
FE 59	2.08E 05	1.81E 06	2.31E 05	5.42E 05	0.00E-01	0.00E-01	1.51E 05	0.00E-01
CO 58	7.54E 05	6.82E 06	0.00E-01	3.36E 05	0.00E-01	0.00E-01	0.00E-01	0.00E-01
CO 60	2.69E 06	2.29E 07	0.00E-01	1.22E 06	0.00E-01	0.00E-01	0.00E-01	0.00E-01
ZN 65	1.65E 08	2.31E 08	1.15E 08	3.66E 08	2.45E 08	0.00E-01	0.00E-01	0.00E-01
RB 86	9.05E 07	3.83E 07	0.00E-01	1.94E 08	0.00E-01	0.00E-01	0.00E-01	0.00E-01
SR 89	5.24E 07	2.93E 08	1.83E 09	0.00E-01	0.00E-01	0.00E-01	0.00E-01	0.00E-01
SR 90	1.59E 10	1.88E 09	6.49E 10	0.00E-01	0.00E-01	0.00E-01	0.00E-01	0.00E-01
Y 91	1.64E 01	3.37E 05	6.13E 02	0.00E-01	0.00E-01	0.00E-01	0.00E-01	0.00E-01
ZR 95	1.46E 01	6.85E 04	6.74E 01	2.16E 01	3.39E 01	0.00E-01	0.00E-01	0.00E-01
NB 95	1.78E 03	2.01E 07	5.94E 03	3.31E 03	3.27E 03	0.00E-01	0.00E-01	0.00E-01
RU 103	3.16E 01	8.56E 03	7.33E 01	0.00E-01	2.80E 02	0.00E-01	0.00E-01	0.00E-01
RU 106	1.92E 02	9.81E 04	1.52E 03	0.00E-01	2.93E 03	0.00E-01	0.00E-01	0.00E-01
AG110M	2.45E 06	1.68E 09	4.46E 06	4.12E 06	8.11E 06	0.00E-01	0.00E-01	0.00E-01
SN 113	1.32E 05	2.44E 06	1.40E 05	5.41E 03	3.96E 03	1.90E 03	0.00E 01	0.00E 01
TE127M	4.93E 05	1.36E 07	4.05E 06	1.45E 06	1.64E 07	1.03E 06	0.00E-01	0.00E-01
TE129M	7.43E 05	2.36E 07	4.69E 06	1.75E 06	1.96E 07	1.61E 06	0.00E-01	0.00E-01
I 131	1.91E 08	8.78E 07	2.33E 08	3.33E 08	5.71E 08	1.09E 11	0.00E-01	0.00E-01
I 132	1.23E-01	6.61E-02	1.32E-01	3.52E-01	5.61E-01	1.23E 01	0.00E-01	0.00E-01
I 133	1.68E 06	4.95E 06	3.17E 06	5.51E 06	9.61E 06	8.10E 08	0.00E-01	0.00E-01
I 135	1.08E 04	3.32E 04	1.12E 04	2.94E 04	4.71E 04	1.94E 06	0.00E-01	0.00E-01
CS 134	2.01E 10	4.31E 08	1.03E 10	2.46E 10	7.97E 09	0.00E-01	2.65E 09	0.00E-01
CS 136	1.42E 09	2.24E 08	4.99E 08	1.97E 09	1.10E 09	0.00E-01	1.50E 08	0.00E-01
CS 137	1.27E 10	3.74E 08	1.41E 10	1.93E 10	6.56E 09	0.00E-01	2.18E 09	0.00E-01
BA 140	1.35E 05	4.23E 06	2.06E 06	2.58E 03	8.78E 02	0.00E-01	1.48E 03	0.00E-01
CE 141	2.68E 01	9.03E 05	3.49E 02	2.36E 02	1.10E 02	0.00E-01	0.00E-01	0.00E-01
CE 144	1.38E 03	8.71E 06	2.58E 04	1.08E 04	6.39E 03	0.00E-01	0.00E-01	0.00E-01
HF 181	8.02E 01	5.26E 04	7.09E 02	3.99E 00	3.34E 00	2.54E 00	0.00E 01	0.00E 01
AM 241	1.52E 05	2.09E 05	2.12E 06	1.99E 06	1.15E 06	0.00E 01	0.00E 01	0.00E 01

*R Values in units of mrem/yr per $\mu Ci/m^3$ for inhalation and tritium, and in units of m^2-mrem/yr per $\mu Ci/sec$ for all others.

TABLE 3.3-13 R VALUES FOR THE BRUNSWICK STEAM ELECTRIC PLANT*

PATHWAY = Goat Milk

AGE GROUP = Teen

Nuclide	T. Body	GI-Tract	Bone	Liver	Kidney	Thyroid	Lung	Skin
H 3	2.04E 03	2.04E 03	0.00E-01	2.04E 03	2.04E 03	2.04E 03	2.04E 03	2.04E 03
P 32	9.60E 08	2.08E 09	2.48E 10	1.53E 09	0.00E-01	0.00E-01	0.00E-01	0.00E-01
CR 51	3.63E 03	6.10E 05	0.00E-01	0.00E-01	7.95E 02	2.02E 03	5.18E 03	0.00E-01
MN 54	2.03E 05	2.10E 06	0.00E-01	1.02E 06	3.05E 05	0.00E-01	0.00E-01	0.00E-01
FE 59	3.63E 05	2.22E 06	4.03E 05	9.40E 05	0.00E-01	0.00E-01	2.96E 05	0.00E-01
CO 58	1.30E 06	7.80E 06	0.00E-01	5.66E 05	0.00E-01	0.00E-01	0.00E-01	0.00E-01
CO 60	4.66E 06	2.69E 07	0.00E-01	2.07E 06	0.00E-01	0.00E-01	0.00E-01	0.00E-01
ZN 65	2.86E 08	2.60E 08	1.77E 08	6.13E 08	3.93E 08	0.00E-01	0.00E-01	0.00E-01
RB 86	1.66E 08	5.24E 07	0.00E-01	3.54E 08	0.00E-01	0.00E-01	0.00E-01	0.00E-01
SR 89	9.65E 07	4.01E 08	3.37E 09	0.00E-01	0.00E-01	0.00E-01	0.00E-01	0.00E-01
SR 90	2.27E 10	2.58E 09	9.18E 10	0.00E-01	0.00E-01	0.00E-01	0.00E-01	0.00E-01
Y 91	3.02E 01	4.62E 05	1.13E 03	0.00E-01	0.00E-01	0.00E-01	0.00E-01	0.00E-01
ZR 95	2.56E 01	8.59E 04	1.18E 02	3.72E 01	5.47E 01	0.00E-01	0.00E-01	0.00E-01
NB 95	3.09E 03	2.40E 07	1.01E 04	5.62E 03	5.45E 03	0.00E-01	0.00E-01	0.00E-01
RU 103	5.58E 01	1.09E 04	1.30E 02	0.00E-01	4.60E 02	0.00E-01	0.00E-01	0.00E-01
RU 106	3.51E 02	1.34E 05	2.79E 03	0.00E-01	5.38E 03	0.00E-01	0.00E-01	0.00E-01
AG110M	4.24E 06	1.96E 09	7.37E 06	6.97E 06	1.33E 07	0.00E-01	0.00E-01	0.00E-01
SN 113	2.28E 05	2.58E 06	2.15E 05	9.06E 03	6.37E 03	2.97E 03	0.00E 01	0.00E 01
TE127M	8.87E 05	1.86E 07	7.46E 06	2.65E 06	3.02E 07	1.77E 06	0.00E-01	0.00E-01
TE129M	1.36E 06	3.22E 07	8.58E 06	3.19E 06	3.59E 07	2.77E 06	0.00E-01	0.00E-01
I 131	3.18E 08	1.17E 08	4.22E 08	5.91E 08	1.02E 09	1.73E 11	0.00E-01	0.00E-01
I 132	2.19E-01	2.66E-01	2.33E-01	6.11E-01	9.62E-01	2.06E 01	0.00E-01	0.00E-01
I 133	2.99E 06	7.43E 06	5.79E 06	9.81E 06	1.72E 07	1.37E 09	0.00E-01	0.00E-01
I 135	1.90E 04	5.63E 04	1.99E 04	5.13E 04	8.10E 04	3.30E 06	0.00E-01	0.00E-01
CS 134	1.96E 10	5.26E 08	1.80E 10	4.23E 10	1.34E 10	0.00E-01	5.13E 09	0.00E-01
CS 136	2.25E 09	2.69E 07	8.50E 08	3.34E 09	1.82E 09	0.00E-01	2.87E 08	0.00E-01
CS 137	1.19E 10	4.85E 08	2.56E 10	3.41E 10	1.16E 10	0.00E-01	4.51E 09	0.00E-01
BA 140	2.39E 05	5.72E 06	3.71E 06	4.55E 03	1.54E 03	0.00E-01	3.06E 03	0.00E-01
CE 141	4.91E 01	1.22E 06	6.40E 02	4.27E 02	2.01E 02	0.00E-01	0.00E-01	0.00E-01
CE 144	2.55E 03	1.19E 07	4.74E 04	1.96E 04	1.17E 04	0.00E-01	0.00E-01	0.00E-01
HF 181	1.41E 02	6.34E 04	1.27E 03	6.97E 00	5.81E 00	4.26E 00	0.00E 01	0.00E 01
AM 241	2.09E 05	2.86E 05	2.90E 06	2.74E 06	1.57E 06	0.00E 01	0.00E 01	0.00E 01

*R Values in units of mrem/yr per $\mu Ci/m^3$ for inhalation and tritium, and in units of m^2-mrem/yr per $\mu Ci/sec$ for all others.

TABLE 3.3-14 R VALUES FOR THE BRUNSWICK STEAM ELECTRIC PLANT*

PATHWAY = Goat Milk

AGE GROUP = Child

Nuclide	T. Body	GI-Tract	Bone	Liver	Kidney	Thyroid	Lung	Skin
H 3	3.23E 03	3.23E 03	0.00E-01	3.23E 03	3.23E 03	3.23E 03	3.23E 03	3.23E 03
P 32	2.35E 09	1.69E 09	6.11E 10	2.86E 09	0.00E-01	0.00E-01	0.00E-01	0.00E-01
CR 51	7.40E 03	3.93E 05	0.00E-01	0.00E-01	1.12E 03	4.11E 03	7.50E 03	0.00E-01
MN 54	4.07E 05	1.28E 06	0.00E-01	1.53E 06	4.29E 05	0.00E-01	0.00E-01	0.00E-01
FE 59	7.52E 05	1.57E 06	9.34E 05	1.51E 06	0.00E-01	0.00E-01	4.38E 05	0.00E-01
CO 58	2.65E 06	5.05E 06	0.00E-01	8.65E 05	0.00E-01	0.00E-01	0.00E-01	0.00E-01
CO 60	9.48E 06	1.78E 07	0.00E-01	3.21E 06	0.00E-01	0.00E-01	0.00E-01	0.00E-01
ZN 65	5.74E 08	1.62E 08	3.47E 08	9.24E 08	5.82E 08	0.00E-01	0.00E-01	0.00E-01
RB 86	4.04E 08	4.22E 07	0.00E-01	6.57E 08	0.00E-01	0.00E-01	0.00E-01	0.00E-01
SR 89	2.38E 08	3.23E 08	8.34E 09	0.00E-01	0.00E-01	0.00E-01	0.00E-01	0.00E-01
SR 90	3.93E 10	2.09E 09	1.55E 11	0.00E-01	0.00E-01	0.00E-01	0.00E-01	0.00E-01
Y 91	7.45E 01	3.71E 05	2.79E 03	0.00E-01	0.00E-01	0.00E-01	0.00E-01	0.00E-01
ZR 95	5.36E 01	6.28E 04	2.74E 02	6.02E 01	8.62E 01	0.00E-01	0.00E-01	0.00E-01
NB 95	6.37E 03	1.65E 07	2.29E 04	8.91E 03	8.37E 03	0.00E-01	0.00E-01	0.00E-01
RU 103	1.19E 02	7.98E 03	3.09E 02	0.00E-01	7.77E 02	0.00E-01	0.00E-01	0.00E-01
RU 106	8.56E 02	1.07E 05	6.86E 03	0.00E-01	9.27E 03	0.00E-01	0.00E-01	0.00E-01
AG110M	8.63E 06	1.28E 09	1.60E 07	1.08E 07	2.01E 07	0.00E-01	0.00E-01	0.00E-01
SN 113	4.61E 05	1.69E 06	4.22E 05	1.36E 04	9.38E 03	5.59E 03	0.00E 01	0.00E 01
TE127M	2.18E 06	1.49E 07	1.84E 07	4.95E 06	5.24E 07	4.40E 06	0.00E-01	0.00E-01
TE129M	3.28E 06	2.58E 07	2.12E 07	5.91E 06	6.21E 07	6.82E 06	0.00E-01	0.00E-01
I 131	5.85E 08	9.17E 07	1.02E 09	1.03E 09	1.69E 09	3.41E 11	0.00E-01	0.00E-01
I 132	4.67E-01	1.19E 00	5.52E-01	1.01E 00	1.55E 00	4.71E 01	0.00E-01	0.00E-01
I 133	6.58E 06	7.00E 06	1.41E 07	1.74E 07	2.90E 07	3.23E 09	0.00E-01	0.00E-01
I 135	4.01E 04	6.47E 04	4.72E 04	8.49E 04	1.30E 05	7.52E 06	0.00E-01	0.00E-01
CS 134	1.43E 10	3.67E 08	4.14E 10	6.80E 10	2.11E 10	0.00E-01	7.56E 09	0.00E-01
CS 136	3.41E 09	1.85E 08	1.92E 09	5.27E 09	2.81E 09	0.00E-01	4.19E 08	0.00E-01
CS 137	8.72E 09	3.70E 08	6.17E 10	5.91E 10	1.93E 10	0.00E-01	6.93E 09	0.00E-01
BA 140	5.23E 05	4.54E 05	8.96E 06	7.85E 03	2.56E 03	0.00E-01	4.68E 03	0.00E-01
CE 141	1.17E 02	9.81E 05	1.53E 03	7.36E 02	3.45E 02	0.00E-01	0.00E-01	0.00E-01
CE 144	6.24E 03	9.55E 06	1.17E 05	3.66E 04	2.03E 04	0.00E-01	0.00E-01	0.00E-01
HF 181	3.04E 02	4.99E 04	3.02E 03	1.17E 01	9.43E 00	9.89E 00	0.00E 01	0.00E 01
AM 241	3.06E 05	2.29E 05	4.08E 06	3.50E 06	1.87E 06	0.00E 01	0.00E 01	0.00E 01

*R Values in units of mrem/yr per $\mu Ci/m^3$ for inhalation and tritium, and in units of m^2-mrem/yr per $\mu Ci/sec$ for all others.

TABLE 3.3-15 R VALUES FOR THE BRUNSWICK STEAM ELECTRIC PLANT*

PATHWAY = Goat Milk

AGE GROUP = Infant

Nuclide	T. Body	GI-Tract	Bone	Liver	Kidney	Thyroid	Lung	Skin
H 3	4.90E 03	4.90E 03	0.00E-01	4.90E 03	4.90E 03	4.90E 03	4.90E 03	4.90E 03
P 32	4.88E 09	1.70E 09	1.26E 11	7.40E 09	0.00E-01	0.00E-01	0.00E-01	0.00E-01
CR 51	1.17E 04	3.42E 05	0.00E-01	0.00E-01	1.67E 03	7.65E 03	1.49E 04	0.00E-01
MN 54	6.45E 05	1.04E 06	0.00E-01	2.84E 06	6.30E 05	0.00E-01	0.00E-01	0.00E-01
FE 59	1.20E 06	1.45E 06	1.74E 06	3.04E 06	0.00E-01	0.00E-01	9.00E 05	0.00E-01
CO 58	4.31E 06	4.31E 06	0.00E-01	1.73E 06	0.00E-01	0.00E-01	0.00E-01	0.00E-01
CO 60	1.55E 07	1.56E 07	0.00E-01	6.56E 06	0.00E-01	0.00E-01	0.00E-01	0.00E-01
ZN 65	7.36E 08	1.35E 09	4.66E 08	1.60E 09	7.74E 08	0.00E-01	0.00E-01	0.00E-01
RB 86	8.23E 08	4.26E 07	0.00E-01	1.67E 09	0.00E-01	0.00E-01	0.00E-01	0.00E-01
SR 89	4.55E 08	3.26E 08	1.59E 10	0.00E-01	0.00E-01	0.00E-01	0.00E-01	0.00E-01
SR 90	4.30E 10	2.11E 09	1.69E 11	0.00E-01	0.00E-01	0.00E-01	0.00E-01	0.00E-01
Y 91	1.39E 02	3.75E 05	5.23E 03	0.00E-01	0.00E-01	0.00E-01	0.00E-01	0.00E-01
ZR 95	8.41E 01	5.90E 04	4.85E 02	1.19E 02	1.28E 02	0.00E-01	0.00E-01	0.00E-01
NB 95	1.02E 04	1.48E 07	4.27E 04	1.76E 04	1.26E 04	0.00E-01	0.00E-01	0.00E-01
RU 103	2.09E 02	7.60E 03	6.25E 02	0.00E-01	1.30E 03	0.00E-01	0.00E-01	0.00E-01
RU 106	1.77E 03	1.07E 05	1.41E 04	0.00E-01	1.67E 04	0.00E-01	0.00E-01	0.00E-01
AG110M	1.43E 07	1.12E 09	2.95E 07	2.16E 07	3.08E 07	0.00E-01	0.00E-01	0.00E-01
SN 113	6.66E 05	1.37E 06	6.46E 05	2.45E 04	1.32E 04	9.34E 03	0.00E 01	0.00E 01
TE127M	4.51E 06	1.50E 07	3.72E 07	1.23E 07	9.16E 07	1.08E 07	0.00E-01	0.00E-01
TE129M	6.69E 06	2.59E 07	4.34E 07	1.49E 07	1.09E 08	1.67E 07	0.00E-01	0.00E-01
I 131	1.11E 09	8.99E 07	2.14E 09	2.52E 09	2.94E 09	8.28E 11	0.00E-01	0.00E-01
I 132	8.28E-01	1.88E 00	1.15E 00	2.33E 00	2.59E 00	1.09E 02	0.00E-01	0.00E-01
I 133	1.27E 07	7.31E 06	2.97E 07	4.32E 07	5.08E 07	7.86E 09	0.00E-01	0.00E-01
I 135	7.11E 04	7.06E 04	9.81E 04	1.95E 05	2.17E 05	1.75E 07	0.00E-01	0.00E-01
CS 134	1.26E 10	3.38E 08	6.68E 10	1.25E 11	3.21E 10	0.00E-01	1.31E 10	0.00E-01
CS 136	4.11E 09	1.67E 08	3.75E 09	1.10E 10	4.39E 09	0.00E-01	8.98E 08	0.00E-01
CS 137	8.17E 09	3.61E 08	9.85E 10	1.15E 11	3.10E 10	0.00E-01	1.25E 10	0.00E-01
BA 140	9.50E 05	4.53E 06	1.84E 07	1.84E 04	4.38E 03	0.00E-01	1.13E 04	0.00E-01
CE 141	2.24E 02	9.85E 05	3.13E 03	1.91E 03	5.88E 02	0.00E-01	0.00E-01	0.00E-01
CE 144	9.39E 03	9.61E 06	1.67E 05	6.86E 04	2.77E 04	0.00E-01	0.00E-01	0.00E-01
HF 181	5.08E 02	4.72E 04	5.74E 03	2.71E 01	1.58E 01	2.30E 01	0.00E 01	0.00E 01
AM 241	3.26E 05	2.30E 05	4.38E 06	3.80E 06	1.97E 06	0.00E 01	0.00E 01	0.00E 01

*R Values in units of mrem/yr per $\mu Ci/m^3$ for inhalation and tritium, and in units of m^2-mrem/yr per $\mu Ci/sec$ for all others.

TABLE 3.3-16 R VALUES FOR THE BRUNSWICK STEAM ELECTRIC PLANT*

PATHWAY = Inhalation

AGE GROUP = Adult

Nuclide	T. Body	GI-Tract	Bone	Liver	Kidney	Thyroid	Lung	Skin
H 3	1.26E 03	1.26E 03	0.00E-01	1.26E 03	1.26E 03	1.26E 03	1.26E 03	1.26E 03
P 32	5.00E 04	8.63E 04	1.32E 06	7.70E 04	0.00E-01	0.00E-01	0.00E-01	0.00E-01
CR 51	9.99E 01	3.32E 03	0.00E-01	0.00E-01	2.28E 01	5.94E 01	1.44E 04	0.00E-01
MN 54	6.29E 03	7.72E 04	0.00E-01	3.95E 04	9.83E 03	0.00E-01	1.40E 06	0.00E-01
FE 59	1.05E 04	1.88E 05	1.17E 04	2.77E 04	0.00E-01	0.00E-01	1.01E 06	0.00E-01
CO 58	2.07E 03	1.06E 05	0.00E-01	1.58E 03	0.00E-01	0.00E-01	9.27E 05	0.00E-01
CO 60	1.48E 04	2.84E 05	0.00E-01	1.15E 04	0.00E-01	0.00E-01	5.96E 06	0.00E-01
ZN 65	4.65E 04	5.34E 04	3.24E 04	1.03E 05	6.89E 04	0.00E-01	8.63E 05	0.00E-01
RB 86	5.89E 04	1.66E 04	0.00E-01	1.35E 05	0.00E-01	0.00E-01	0.00E-01	0.00E-01
SR 89	8.71E 03	3.49E 05	3.04E 05	0.00E-01	0.00E-01	0.00E-01	1.40E 06	0.00E-01
SR 90	6.09E 06	7.21E 05	9.91E 07	0.00E-01	0.00E-01	0.00E-01	9.59E 06	0.00E-01
Y 91	1.24E 04	3.84E 05	4.62E 05	0.00E-01	0.00E-01	0.00E-01	1.70E 06	0.00E-01
ZR 95	2.32E 04	1.50E 05	1.07E 05	3.44E 04	5.41E 04	0.00E-01	1.77E 06	0.00E-01
NB 95	4.20E 03	1.04E 05	1.41E 04	7.80E 03	7.72E 03	0.00E-01	5.04E 05	0.00E-01
RU 103	6.57E 02	1.10E 05	1.53E 03	0.00E-01	5.82E 03	0.00E-01	5.04E 05	0.00E-01
RU 106	8.71E 03	9.11E 05	6.90E 04	0.00E-01	1.33E 05	0.00E-01	9.35E 06	0.00E-01
AG110M	5.94E 03	3.02E 05	1.08E 04	9.99E 03	1.97E 04	0.00E-01	4.63E 06	0.00E-01
SN 113	6.48E 03	2.48E 04	6.87E 03	2.66E 02	1.97E 02	9.33E 01	2.99E 05	0.00E 01
TE127M	1.57E 03	1.49E 05	1.26E 04	5.76E 03	4.57E 04	3.28E 03	9.59E 05	0.00E-01
TE129M	1.58E 03	3.83E 05	9.75E 03	4.67E 03	3.65E 04	3.44E 03	1.16E 06	0.00E-01
I 131	2.05E 04	6.27E 03	2.52E 04	3.57E 04	6.12E 04	1.19E 07	0.00E-01	0.00E-01
I 132	1.16E 03	4.06E 02	1.16E 03	3.25E 03	5.18E 03	1.14E 05	0.00E-01	0.00E-01
I 133	4.51E 03	8.87E 03	8.63E 03	1.48E 04	2.58E 04	2.15E 06	0.00E-01	0.00E-01
I 135	2.56E 03	5.24E 03	2.68E 03	6.97E 03	1.11E 04	4.47E 05	0.00E-01	0.00E-01
CS 134	7.27E 05	1.04E 04	3.72E 05	8.47E 05	2.87E 05	0.00E-01	9.75E 04	0.00E-01
CS 136	1.10E 05	1.17E 04	3.90E 04	1.46E 05	8.55E 04	0.00E-01	1.20E 04	0.00E-01
CS 137	4.27E 05	8.39E 03	4.78E 05	6.20E 05	2.22E 05	0.00E-01	7.51E 04	0.00E-01
BA 140	2.56E 03	2.18E 05	3.90E 04	4.90E 01	1.67E 01	0.00E-01	1.27E 06	0.00E-01
CE 141	1.53E 03	1.20E 05	1.99E 04	1.35E 04	6.25E 03	0.00E-01	3.61E 05	0.00E-01
CE 144	1.84E 05	8.15E 05	3.43E 06	1.43E 06	8.47E 05	0.00E-01	7.76E 06	0.00E-01
HF 181	5.16E 03	1.29E 05	4.56E 04	2.57E 02	2.15E 02	1.63E 02	5.99E 05	0.00E 01
AM 241	5.37E 08	3.68E 05	1.34E 10	9.04E 09	4.03E 09	0.00E 01	4.85E 08	0.00E 01

*R Values in units of mrem/yr per $\mu Ci/m^3$ for inhalation and tritium, and in units of m^2-mrem/yr per $\mu Ci/sec$ for all others.

TABLE 3.3-17 R VALUES FOR THE BRUNSWICK STEAM ELECTRIC PLANT*

PATHWAY = Inhalation

AGE GROUP = Teen

Nuclide	T. Body	GI-Tract	Bone	Liver	Kidney	Thyroid	Lung	Skin
H 3	1.27E 03	1.27E 03	0.00E-01	1.27E 03	1.27E 03	1.27E 03	1.27E 03	1.27E 03
P 32	7.15E 04	9.27E 04	1.89E 06	1.09E 05	0.00E-01	0.00E-01	0.00E-01	0.00E-01
CR 51	1.35E 02	3.00E 03	0.00E-01	0.00E-01	3.07E 01	7.49E 01	2.09E 04	0.00E-01
MN 54	8.39E 03	6.67E 04	0.00E-01	5.10E 04	1.27E 04	0.00E-01	1.98E 06	0.00E-01
FE 59	1.43E 04	1.78E 05	1.59E 04	3.69E 04	0.00E-01	0.00E-01	1.53E 06	0.00E-01
CO 58	2.77E 03	9.51E 04	0.00E-01	2.07E 03	0.00E-01	0.00E-01	1.34E 06	0.00E-01
CO 60	1.98E 04	2.59E 05	0.00E-01	1.51E 04	0.00E-01	0.00E-01	8.71E 06	0.00E-01
ZN 65	6.23E 04	4.66E 04	3.85E 04	1.33E 05	8.63E 04	0.00E-01	1.24E 06	0.00E-01
RB 86	8.39E 04	1.77E 04	0.00E-01	1.90E 05	0.00E-01	0.00E-01	0.00E-01	0.00E-01
SR 89	1.25E 04	3.71E 05	4.34E 05	0.00E-01	0.00E-01	0.00E-01	2.41E 06	0.00E-01
SR 90	6.67E 06	7.64E 05	1.08E 08	0.00E-01	0.00E-01	0.00E-01	1.65E 07	0.00E-01
Y 91	1.77E 04	4.08E 05	6.60E 05	0.00E-01	0.00E-01	0.00E-01	2.93E 06	0.00E-01
ZR 95	3.15E 04	1.49E 05	1.45E 05	4.58E 04	6.73E 04	0.00E-01	2.68E 06	0.00E-01
NB 95	5.66E 03	9.67E 04	1.85E 04	1.03E 04	9.99E 03	0.00E-01	7.50E 05	0.00E-01
RU 103	8.95E 02	1.09E 05	2.10E 03	0.00E-01	7.42E 03	0.00E-01	7.82E 05	0.00E-01
RU 106	1.24E 04	9.59E 05	9.83E 04	0.00E-01	1.90E 05	0.00E-01	1.61E 07	0.00E-01
AG110M	7.98E 03	2.72E 05	1.38E 04	1.31E 04	2.50E 04	0.00E-01	6.74E 06	0.00E-01
SN 113	8.69E 03	2.03E 04	8.19E 03	3.45E 02	2.46E 02	1.13E 02	4.27E 05	0.00E 01
TE127M	2.18E 03	1.59E 05	1.80E 04	8.15E 03	6.53E 04	4.38E 03	1.65E 06	0.00E-01
TE129M	2.24E 03	4.04E 05	1.39E 04	6.57E 03	5.18E 04	4.57E 03	1.97E 06	0.00E-01
I 131	2.64E 04	6.48E 03	3.54E 04	4.90E 04	8.39E 04	1.46E 07	0.00E-01	0.00E-01
I 132	1.57E 03	1.27E 03	1.59E 03	4.37E 03	6.91E 03	1.51E 05	0.00E-01	0.00E-01
I 133	6.21E 03	1.03E 04	1.21E 04	2.05E 04	3.59E 04	2.92E 06	0.00E-01	0.00E-01
I 135	3.48E 03	6.94E 03	3.69E 03	9.43E 03	1.49E 04	6.20E 05	0.00E-01	0.00E-01
CS 134	5.48E 05	9.75E 03	5.02E 05	1.13E 06	3.75E 05	0.00E-01	1.46E 05	0.00E-01
CS 136	1.37E 05	1.09E 04	5.14E 04	1.93E 05	1.10E 05	0.00E-01	1.77E 04	0.00E-01
CS 137	3.11E 05	8.48E 03	6.69E 05	8.47E 05	3.04E 05	0.00E-01	1.21E 05	0.00E-01
BA 140	3.51E 03	2.28E 05	5.46E 04	6.69E 01	2.28E 01	0.00E-01	2.03E 06	0.00E-01
CE 141	2.16E 03	1.26E 05	2.84E 04	1.89E 04	8.87E 03	0.00E-01	6.13E 05	0.00E-01
CE 144	2.62E 05	8.63E 05	4.88E 06	2.02E 06	1.21E 06	0.00E-01	1.33E 07	0.00E-01
HF 181	7.05E 03	1.21E 05	6.32E 04	3.48E 02	2.90E 02	2.12E 02	9.39E 05	0.00E 01
AM 241	5.68E 08	3.90E 05	1.42E 10	9.60E 09	4.26E 09	0.00E 01	8.40E 08	0.00E 01

*R Values in units of mrem/yr per $\mu Ci/m^3$ for inhalation and tritium, and in units of m^2-mrem/yr per $\mu Ci/sec$ for all others.

TABLE 3.3-18 R VALUES FOR THE BRUNSWICK STEAM ELECTRIC PLANT*

PATHWAY = Inhalation

AGE GROUP = Child

Nuclide	T. Body	GI-Tract	Bone	Liver	Kidney	Thyroid	Lung	Skin
H 3	1.12E 03	1.12E 03	0.00E-01	1.12E 03	1.12E 03	1.12E 03	1.12E 03	1.12E 03
P 32	9.86E 04	4.21E 04	2.60E 06	1.14E 05	0.00E-01	0.00E-01	0.00E-01	0.00E-01
CR 51	1.54E 02	1.08E 03	0.00E-01	0.00E-01	2.43E 01	8.53E 01	1.70E 04	0.00E-01
MN 54	9.50E 03	2.29E 04	0.00E-01	4.29E 04	1.00E 04	0.00E-01	1.57E 06	0.00E-01
FE 59	1.67E 04	7.06E 04	2.07E 04	3.34E 04	0.00E-01	0.00E-01	1.27E 06	0.00E-01
CO 58	3.16E 03	3.43E 04	0.00E-01	1.77E 03	0.00E-01	0.00E-01	1.10E 06	0.00E-01
CO 60	2.26E 04	9.61E 04	0.00E-01	1.31E 04	0.00E-01	0.00E-01	7.06E 06	0.00E-01
ZN 65	7.02E 04	1.63E 04	4.25E 04	1.13E 05	7.13E 04	0.00E-01	9.94E 05	0.00E-01
RB 86	1.14E 05	7.98E 03	0.00E-01	1.98E 05	0.00E-01	0.00E-01	0.00E-01	0.00E-01
SR 89	1.72E 04	1.67E 05	5.99E 05	0.00E-01	0.00E-01	0.00E-01	2.15E 06	0.00E-01
SR 90	6.43E 06	3.43E 05	1.01E 08	0.00E-01	0.00E-01	0.00E-01	1.47E 07	0.00E-01
Y 91	2.43E 04	1.84E 05	9.13E 05	0.00E-01	0.00E-01	0.00E-01	2.62E 06	0.00E-01
ZR 95	3.69E 04	6.10E 04	1.90E 05	4.17E 04	5.95E 04	0.00E-01	2.23E 06	0.00E-01
NB 95	6.54E 03	3.69E 04	2.35E 04	9.16E 03	8.61E 03	0.00E-01	6.13E 05	0.00E-01
RU 103	1.07E 03	4.47E 04	2.79E 03	0.00E-01	7.02E 03	0.00E-01	6.61E 05	0.00E-01
RU 106	1.69E 04	4.29E 05	1.36E 05	0.00E-01	1.84E 05	0.00E-01	1.43E 07	0.00E-01
AG110M	9.13E 03	1.00E 05	1.68E 04	1.14E 04	2.12E 04	0.00E-01	5.47E 06	0.00E-01
SN 113	9.84E 03	7.45E 03	9.01E 03	2.91E 02	2.03E 02	1.19E 02	3.40E 05	0.00E 01
TE127M	3.01E 03	7.13E 04	2.48E 04	8.53E 03	6.35E 04	6.06E 03	1.48E 06	0.00E-01
TE129M	3.04E 03	1.81E 05	1.92E 04	6.84E 03	5.02E 04	6.32E 03	1.76E 06	0.00E-01
I 131	2.72E 04	2.84E 03	4.80E 04	4.80E 04	7.87E 04	1.62E 07	0.00E-01	0.00E-01
I 132	1.87E 03	3.20E 03	2.11E 03	4.06E 03	6.24E 03	1.93E 05	0.00E-01	0.00E-01
I 133	7.68E 03	5.47E 03	1.66E 04	2.03E 04	3.37E 04	3.84E 06	0.00E-01	0.00E-01
I 135	4.14E 03	4.43E 03	4.91E 03	8.72E 03	1.34E 04	7.91E 05	0.00E-01	0.00E-01
CS 134	2.24E 05	3.84E 03	6.50E 05	1.01E 06	3.30E 05	0.00E-01	1.21E 05	0.00E-01
CS 136	1.16E 05	4.17E 03	6.50E 04	1.71E 05	9.53E 04	0.00E-01	1.45E 04	0.00E-01
CS 137	1.28E 05	3.61E 03	9.05E 05	8.24E 05	2.82E 05	0.00E-01	1.04E 05	0.00E-01
BA 140	4.32E 03	1.02E 05	7.39E 04	6.47E 01	2.11E 01	0.00E-01	1.74E 06	0.00E-01
CE 141	2.89E 03	5.65E 04	3.92E 04	1.95E 04	8.53E 03	0.00E-01	5.43E 05	0.00E-01
CE 144	3.61E 05	3.88E 05	6.76E 06	2.11E 06	1.17E 06	0.00E-01	1.19E 07	0.00E-01
HF 181	8.50E 03	5.31E 04	8.44E 04	3.28E 02	2.64E 02	2.76E 02	7.95E 05	0.00E 01
AM 241	4.59E 08	1.75E 05	1.10E 10	6.81E 09	2.82E 09	0.00E 01	7.47E 08	0.00E 01

*R Values in units of mrem/yr per $\mu Ci/m^3$ for inhalation and tritium, and in units of m^2-mrem/yr per $\mu Ci/sec$ for all others.

TABLE 3.3-19 R VALUES FOR THE BRUNSWICK STEAM ELECTRIC PLANT*

PATHWAY = Inhalation

AGE GROUP = Infant

Nuclide	T. Body	GI-Tract	Bone	Liver	Kidney	Thyroid	Lung	Skin
H 3	6.46E 02	6.46E 02	0.00E-01	6.46E 02	6.46E 02	6.46E 02	6.46E 02	6.46E 02
P 32	7.73E 04	1.61E 04	2.03E 06	1.12E 05	0.00E-01	0.00E-01	0.00E-01	0.00E-01
CR 51	8.93E 01	3.56E 02	0.00E-01	0.00E-01	1.32E 01	5.75E 01	1.28E 04	0.00E-01
MN 54	4.98E 03	7.05E 03	0.00E-01	2.53E 04	4.98E 03	0.00E-01	9.98E 05	0.00E-01
FE 59	9.46E 03	2.47E 04	1.35E 04	2.35E 04	0.00E-01	0.00E-01	1.01E 06	0.00E-01
CO 58	1.82E 03	1.11E 04	0.00E-01	1.22E 03	0.00E-01	0.00E-01	7.76E 05	0.00E-01
CO 60	1.18E 04	3.19E 04	0.00E-01	8.01E 03	0.00E-01	0.00E-01	4.50E 06	0.00E-01
ZN 65	3.10E 04	5.13E 04	1.93E 04	6.25E 04	3.24E 04	0.00E-01	6.46E 05	0.00E-01
RB 86	8.81E 04	3.03E 03	0.00E-01	1.90E 05	0.00E-01	0.00E-01	0.00E-01	0.00E-01
SR 89	1.14E 04	6.39E 04	3.97E 05	0.00E-01	0.00E-01	0.00E-01	2.03E 06	0.00E-01
SR 90	2.59E 06	1.31E 05	4.08E 07	0.00E-01	0.00E-01	0.00E-01	1.12E 07	0.00E-01
Y 91	1.57E 04	7.02E 04	5.87E 05	0.00E-01	0.00E-01	0.00E-01	2.45E 06	0.00E-01
ZR 95	2.03E 04	2.17E 04	1.15E 05	2.78E 04	3.10E 04	0.00E-01	1.75E 06	0.00E-01
NB 95	3.77E 03	1.27E 04	1.57E 04	6.42E 03	4.71E 03	0.00E-01	4.78E 05	0.00E-01
RU 103	6.78E 02	1.61E 04	2.01E 03	0.00E-01	4.24E 03	0.00E-01	5.51E 05	0.00E-01
RU 106	1.09E 04	1.64E 05	8.67E 04	0.00E-01	1.06E 05	0.00E-01	1.15E 07	0.00E-01
AG110M	4.99E 03	3.30E 04	9.97E 03	7.21E 03	1.09E 04	0.00E-01	3.66E 06	0.00E-01
SN 113	4.89E 03	2.29E 03	4.68E 03	1.74E 02	9.94E 01	6.73E 01	2.30E 05	0.00E 01
TE127M	2.07E 03	2.73E 04	1.66E 04	6.89E 03	3.75E 04	4.86E 03	1.31E 06	0.00E-01
TE129M	2.22E 03	6.89E 04	1.41E 04	6.08E 03	3.17E 04	5.47E 03	1.68E 06	0.00E-01
I 131	1.96E 04	1.06E 03	3.79E 04	4.43E 04	5.17E 04	1.48E 07	0.00E-01	0.00E-01
I 132	1.26E 03	1.90E 03	1.69E 03	3.54E 03	3.94E 03	1.69E 05	0.00E-01	0.00E-01
I 133	5.59E 03	2.15E 03	1.32E 04	1.92E 04	2.24E 04	3.55E 06	0.00E-01	0.00E-01
I 135	2.77E 03	1.83E 03	3.86E 03	7.59E 03	8.46E 03	6.95E 05	0.00E-01	0.00E-01
CS 134	7.44E 04	1.33E 03	3.96E 05	7.02E 05	1.90E 05	0.00E-01	7.95E 04	0.00E-01
CS 136	5.28E 04	1.43E 03	4.82E 04	1.34E 05	5.63E 04	0.00E-01	1.17E 04	0.00E-01
CS 137	4.54E 04	1.33E 03	5.48E 05	6.11E 05	1.72E 05	0.00E-01	7.12E 04	0.00E-01
BA 140	2.89E 03	3.83E 04	5.59E 04	5.59E 01	1.34E 01	0.00E-01	1.59E 06	0.00E-01
CE 141	1.99E 03	2.15E 04	2.77E 04	1.66E 04	5.24E 03	0.00E-01	5.16E 05	0.00E-01
CE 144	1.76E 05	1.48E 05	3.19E 06	1.21E 06	5.37E 05	0.00E-01	9.83E 06	0.00E-01
HF 181	5.05E 03	1.90E 04	5.65E 04	2.66E 02	1.59E 02	2.26E 02	6.73E 05	0.00E 01
AM 241	1.83E 08	6.69E 04	4.41E 09	2.73E 09	1.11E 09	0.00E 01	5.68E 08	0.00E 01

*R Values in units of mrem/yr per $\mu Ci/m^3$ for inhalation and tritium, and in units of m^2-mrem/yr per $\mu Ci/sec$ for all others.

INDEX

4.0 RADIOLOGICAL ENVIRONMENTAL MONITORING PROGRAM 4-3

LIST OF TABLES

Table No.	Title	Page
SECTION 4		
4.0-1	RADIOLOGICAL ENVIRONMENTAL MONITORING PROGRAM	4-4

4.0 RADIOLOGICAL ENVIRONMENTAL MONITORING PROGRAM

Table 4.0-1 contains the sample point description, sampling and collection frequency analysis, and analysis frequency for various exposure pathways in the vicinity of the BSEP for the radiological monitoring program. Figure 4.0-1 shows the location of various sample points. Figure F-2, Gaseous Radwaste Effluent System, denotes the various release pathways.

TABLE 4.0-1

RADIOLOGICAL ENVIRONMENTAL MONITORING PROGRAM*

Exposure Pathway and/or Sample	Sample ID No.	Sample Point Description, Approximate Distance, and Direction	Sampling and Collection Frequency	Analysis Frequency	Analysis [(a)]
DIRECT RADIATION	1	1.1 miles E	Q	Q	Gamma Dose
	2	0.9 miles ESE	Q	Q	Gamma Dose
	3	0.9 miles SE	Q	Q	Gamma Dose
	4	1.1 miles SSE	Q	Q	Gamma Dose
	5	1.1 miles S	Q	Q	Gamma Dose
	6	1.1 miles SSW	Q	Q	Gamma Dose
	7	1.1 miles SW	Q	Q	Gamma Dose
	8	1.2 miles W	Q	Q	Gamma Dose
	9	1.0 miles WNW	Q	Q	Gamma Dose
	10	0.9 miles NW	Q	Q	Gamma Dose
	11	0.9 miles NNW	Q	Q	Gamma Dose
	12	1.1 miles N	Q	Q	Gamma Dose
	13	1.2 miles NNE	Q	Q	Gamma Dose
	14	0.5 miles NE	Q	Q	Gamma Dose
	15	0.9 miles ENE	Q	Q	Gamma Dose
	16	1.0 miles WSW	Q	Q	Gamma Dose
	17	1.4 miles ESE	Q	Q	Gamma Dose

*Refer to Figure 4.0-1 and Figure F-2.

TABLE 4.0-1 (Cont'd)

Exposure Pathway and/or Sample	Sample ID No.	Sample Point Description, Approximate Distance, and Direction	Sampling and Collection Frequency	Analysis Frequency	Analysis [a]
DIRECT RADIATION (Cont'd)	18	1.7 miles SE	Q	Q	Gamma Dose
	77	5.3 miles S	Q	Q	Gamma Dose
	75	4.6 miles S	Q	Q	Gamma Dose
	76	4.8 miles SSW	Q	Q	Gamma Dose
	22	5.2 miles SW	Q	Q	Gamma Dose
	23	4.6 miles WSW	Q	Q	Gamma Dose
	24	3.0 miles W	Q	Q	Gamma Dose
	25	8.6 miles WNW	Q	Q	Gamma Dose
	26	5.9 miles NW	Q	Q	Gamma Dose
	27	5.1 miles NNW	Q	Q	Gamma Dose
	79	9.5 miles N	Q	Q	Gamma Dose
	78	10.0 miles NNE	Q	Q	Gamma Dose
	30	2.0 miles NE	Q	Q	Gamma Dose
	31	2.5 miles ENE	Q	Q	Gamma Dose
	32	5.8 miles ENE	Q	Q	Gamma Dose
	33	4.1 miles E	Q	Q	Gamma Dose
	34	5.4 miles ENE	Q	Q	Gamma Dose
	81	10.0 miles WNW [c]	Q	Q	Gamma Dose

TABLE 4.0-1 (Cont'd)

Exposure Pathway and/or Sample	Sample ID No.	Sample Point Description, Approximate Distance, and Direction	Sampling and Collection Frequency	Analysis Frequency	Analysis [a]
DIRECT RADIATION (Cont'd)	36	8.9 miles NE	Q	Q	Gamma Dose
	37	5.5 miles NW	Q	Q	Gamma Dose
	38	11.0 miles W	Q	Q	Gamma Dose
	39	5.3 miles SW	Q	Q	Gamma Dose
	40	6.8 miles WSW	Q	Q	Gamma Dose
	20	2.1 miles S	Q	Q	Gamma Dose
	21	2.9 miles SSW	Q	Q	Gamma Dose
	28	4.2 miles NW	Q	Q	Gamma Dose
	29	2.6 miles SSW	Q	Q	Gamma Dose
	35	7.2 miles SSE	Q	Q	Gamma Dose

TABLE 4.0-1 (Cont'd)

Exposure Pathway and/or Sample	Sample ID No.	Sample Point Description, Approximate Distance, and Direction	Sampling and Collection Frequency	Analysis Frequency	Analysis [a]
AIRBORNE Radioiodine and Particulate	200	0.9 miles SW Visitors Center	Continuous sampler operation with sample collected weekly or as required by dust loading, whichever is more frequent	W	Radioiodine Canister I-131 analysis
				W	Particulate sampler
	201	0.5 miles NE PMAC			Gross beta radioactivity analysis following filter change [b]
	202	0.9 miles S Substation - Const. Rd.		Q	Gamma isotopic analysis of composite by location
	203	2.0 miles SSW Southport Substation			
	204	22.5 miles NNE Sutton Plant - Control [c]			
	205	0.6 SSE Spoil Pond			

TABLE 4.0-1 (Cont'd)

Exposure Pathway and/or Sample	Sample ID No.	Sample Point Description, Approximate Distance, and Direction	Sampling and Collection Frequency	Analysis Frequency	Analysis [a]
WATERBORNE a. Surface	400	0.6 miles NE Intake Canal - Control [c]	Composite sample [d] Collection-M	Monthly	Gamma Isotopic
	401	4.9 miles SSW Discharge Canal at OD Pumps		Q	Tritium
b. Sediment	500	5.0 miles SSW Discharge - Beach near OD Pumps	Semiannual	Semiannual	Gamma Isotopic
INGESTION a. Milk	600	To be identified as available	With animals on pasture - semi-monthly At other times - monthly	Semi-monthly	Gamma isotopic and I-131 analyses (animals on pasture)
	601				
	602			Monthly	Gamma isotopic and I-131 analysis (other times)
	603				
b. Fish and Invertebrates (shrimp)	700	5.5 mile SSW Atlantic Ocean [e] at Discharge	When in Season - Semiannual	Semiannual	Gamma isotopic on edible portions
	701				
	702				
	703-705	Not Specified - Atlantic Ocean [c][e]			

TABLE 4.0-1 (Cont'd)

Exposure Pathway and/or Sample	Sample ID No.	Sample Point Description, Approximate Distance, and Direction	Sampling and Collection Frequency	Analysis Frequency	Analysis [a]
c. Broadleaf Vegetation	800	0.8 miles NE Intake Canal	When available - Monthly	Monthly	Gamma Isotopic
	801	0.6 miles SW Discharge Canal		Monthly	I-131
	802	10.2 miles - Control - Location not Specified [c]			
	803	0.6 miles SSE Spoil Pond			

(a) The LLD for each analysis is specified in Table 7.3.15-3 of the ODCM Specifications for the Brunswick Steam Electric Plant.

(b) Particulate samples will be analyzed for gross beta radiation 24 hours or more following filter change. If gross beta activity in air particulate samples is greater than ten times the yearly mean of control samples, gamma isotopic analysis shall be performed on the individual samples.

(c) Control Station - These stations are presumed to be outside the influence of plant effluents.

(d) Composite samples shall be collected by collecting an aliquot at intervals not exceeding 6 hours.

(e) A sample of one free swimmer, one bottom feeder, and one shellfish (shrimp) will be collected if available. A control sample of each species collected will be obtained if available.

FIGURE 4.0-1

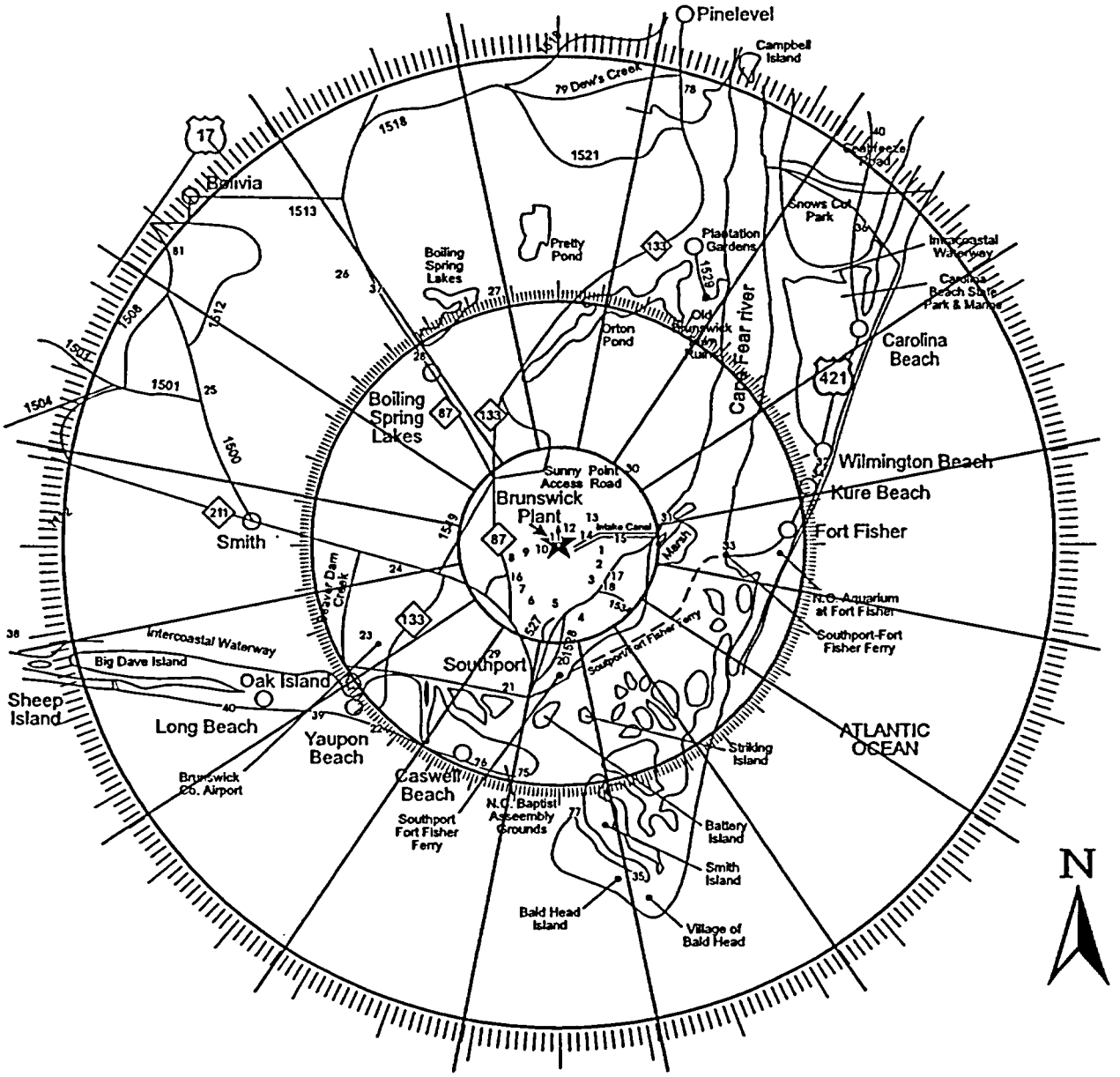
Pinelevel
Campbell Island
Dew's Creek
Bolivia
Pretty Pond
Boiling Spring Lakes
Plantation Gardens
Snows Cut Park
Intercoastal Waterway
Carolina Beach State Park & Marina
Orton Pond
Old Brunswick Plantation
Cape Fear river
Carolina Beach
Wilmington Beach
Kure Beach
Fort Fisher
Sunny Point Access Road
Brunswick Plant
Intake Canal
Marsh
Smith
Dam Creek
N.C. Aquarium at Fort Fisher
Southport-Fort Fisher Ferry
Intercoastal Waterway
Big Dave Island
Oak Island
Southport
Sheep Island
Long Beach
Yaupon Beach
Caswell Beach
Brunswick Co. Airport
Southport Fort Fisher Ferry
N.C. Baptist Assembly Grounds
Striking Island
ATLANTIC OCEAN
Battery Island
Smith Island
Bald Head Island
Village of Bald Head
N

FIGURE 4.0-1b

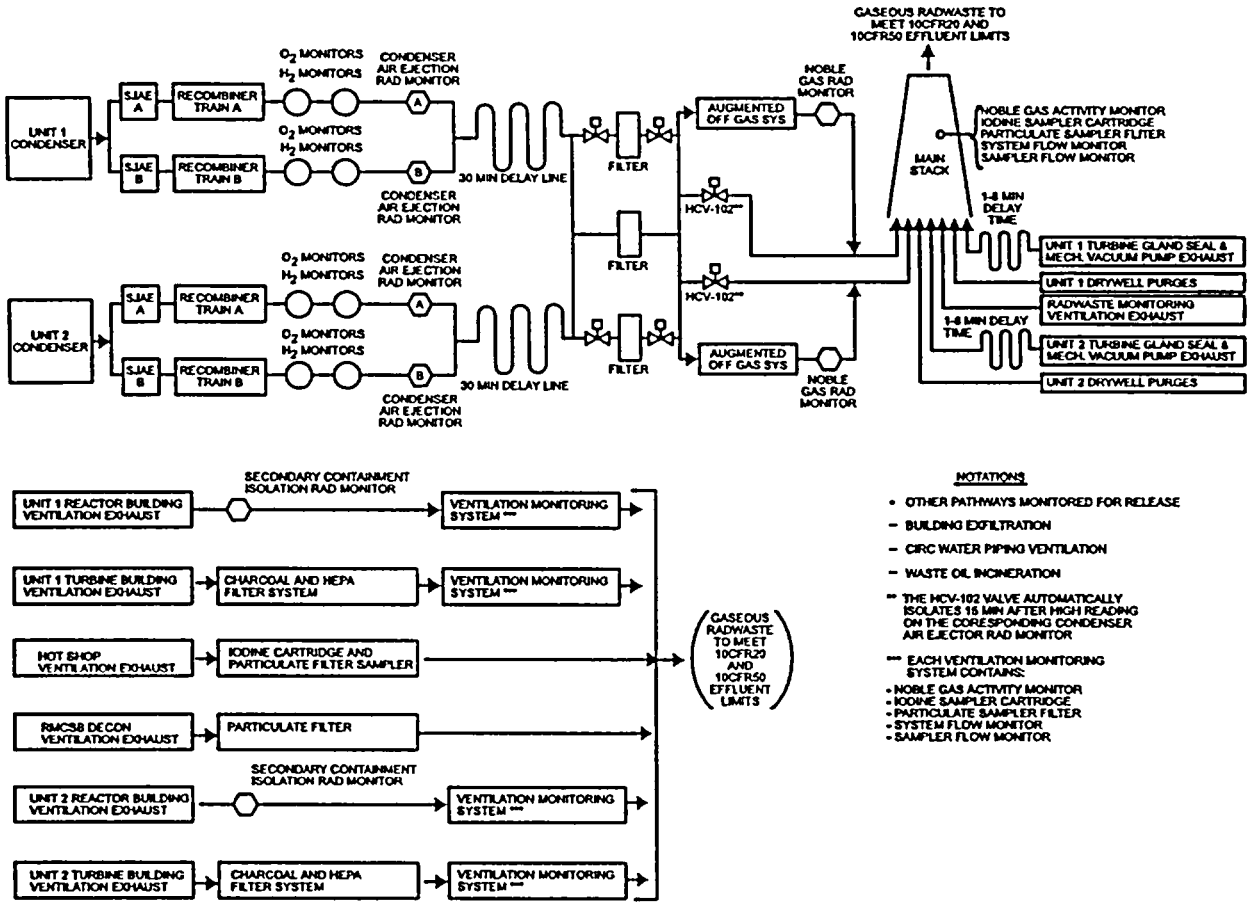
GASEOUS RADWASTE TO MEET 10CFR20 AND 10CFR50 EFFLUENT LIMITS
UNIT 1 CONDENSER
SJAE A
SJAE B
RECOMBINER TRAIN A
RECOMBINER TRAIN B
O_2 MONITORS
H_2 MONITORS
CONDENSER AIR EJECTION RAD MONITOR
30 MIN DELAY LINE
FILTER
AUGMENTED OFF GAS SYS
NOBLE GAS RAD MONITOR
HCV-102**
MAIN STACK
NOBLE GAS ACTIVITY MONITOR
IODINE SAMPLER CARTRIDGE
PARTICULATE SAMPLER FLITER
SYSTEM FLOW MONITOR
SAMPLER FLOW MONITOR
1-8 MIN DELAY TIME
UNIT 1 TURBINE GLAND SEAL & MECH. VACUUM PUMP EXHAUST
UNIT 1 DRYWELL PURGES
RADWASTE MONITORING VENTILATION EXHAUST
UNIT 2 TURBINE GLAND SEAL & MECH. VACUUM PUMP EXHAUST
UNIT 2 DRYWELL PURGES
UNIT 2 CONDENSER
SECONDARY CONTAINMENT ISOLATION RAD MONITOR
UNIT 1 REACTOR BUILDING VENTILATION EXHAUST
VENTILATION MONITORING SYSTEM ***
UNIT 1 TURBINE BUILDING VENTILATION EXHAUST
CHARCOAL AND HEPA FILTER SYSTEM
HOT SHOP VENTILATION EXHAUST
IODINE CARTRIDGE AND PARTICULATE FILTER SAMPLER
RMCSB DECON VENTILATION EXHAUST
PARTICULATE FILTER
UNIT 2 REACTOR BUILDING VENTILATION EXHAUST
UNIT 2 TURBINE BUILDING VENTILATION EXHAUST
GASEOUS RADWASTE TO MEET 10CFR20 AND 10CFR50 EFFLUENT LIMITS
NOTATIONS
• OTHER PATHWAYS MONITORED FOR RELEASE
– BUILDING EXFILTRATION
– CIRC WATER PIPING VENTILATION
– WASTE OIL INCINERATION
** THE HCV-102 VALVE AUTOMATICALLY ISOLATES 15 MIN AFTER HIGH READING ON THE CORESPONDING CONDENSER AIR EJECTOR RAD MONITOR
*** EACH VENTILATION MONITORING SYSTEM CONTAINS:
• NOBLE GAS ACTIVITY MONITOR
• IODINE SAMPLER CARTRIDGE
• PARTICULATE SAMPLER FILTER
• SYSTEM FLOW MONITOR
• SAMPLER FLOW MONITOR

INDEX

5.0 INTERLABORATORY COMPARISON STUDIES 5-2
5.1 OBJECTIVE 5-2
5.2 PROGRAM 5-2
5.2.1 Environmental Sample Analyses Comparison Program 5-2
5.2.2 Effluent Release Analyses Program 5-2
5.2.3 Abnormal Results 5-2

5.0 INTERLABORATORY COMPARISON STUDIES

5.1 OBJECTIVE

The objective of this program is to evaluate the total laboratory analysis process by comparing results with results obtained by a separate laboratory or laboratories for an equivalent sample.

5.2 PROGRAM

5.2.1 Environmental Sample Analyses Comparison Program

Environmental samples from the BSEP environs will be analyzed by the Harris Energy & Environmental Center or by a qualified contracting laboratory. These laboratories will participate at least annually in a interlaboratory comparison study.

The results of the laboratories' performances in the study will be provided to BSEP E&RC and will be included in the Annual Radiological Environmental Operating Report. The results will be provided to the NRC upon request.

5.2.2 Effluent Release Analyses Program

BSEP E&RC will perform sample analyses for gamma-emitting radionuclides in effluent releases. The E&RC radiochemistry laboratory will participate annually in a corporate interlaboratory comparison study or equivalent study. The results of these studies will be provided to the NRC upon request.

5.2.3 Abnormal Results

CP&L laboratory or vendor laboratory results shall be compared to the criteria established in the NRC Inspection Manual (Procedure 84750) for Radioactive Waste Treatment, Effluent, and Environmental Monitoring. The referenced criteria is as follows:

a. Divide each standard result by its associated uncertainty to obtain resolution (the uncertainty is defined as the relative standard deviation, or sigma, of the standard result as calculated from counting statistics).

b. Divide each laboratory result by the corresponding standard result to obtain the ratio (laboratory result/standard).

c. The laboratory measurement is in agreement if the value of the ratio falls within the limits shown below for the corresponding resolution:

Resolution	Ratio
< 4	
4 - 7	0.5 - 2.0
8 - 15	0.6 - 1.66
16 - 50	0.75 - 1.33
51 - 200	0.80 - 1.25
> 200	0.85 - 1.18

If the CP&L laboratory or vendor laboratory results lie outside the ratio criteria, an evaluation will be performed to identify any recommended remedial actions to reduce anomalous errors. Complete documentation of the evaluation will be available to BSEP and will be provided to the NRC upon request.

INDEX

6.0 TOTAL DOSE (40CFR190 CONFORMANCE) 6-2
6.1 INTRODUCTION 6-2
6.2 GENERAL 6-2
6.3 CALCULATIONS OF TOTAL BODY DOSE 6-3
6.3.1 Direct Radiation 6-3
6.3.2 Inhalation Dose 6-3
6.3.3 Ingestion Pathway 6-3
6.3.4 Other Uranium Fuel Cycle Sources 6-3
6.4 THYROID DOSE 6-4

6.0 TOTAL DOSE (40CFR190 CONFORMANCE)

6.1 INTRODUCTION

Compliance with 40CFR190 as prescribed by ODCM Specification 7.3.14 is to be demonstrated only when one or more of ODCM Specifications 7.3.4.a, 7.3.4.b, 7.3.8.a, 7.3.8.b, 7.3.9.a, 7.3.9.b is exceeded by a factor of 2. Once this occurs, the Company has 30 days to submit this report.

6.2 GENERAL

To perform the calculations to evaluate conformance with 40CFR190, an effort is made to develop doses that are realistic by removing assumptions that lead to overestimates of dose to a MEMBER OF THE PUBLIC (i.e., calculations for compliance with 10CR50, Appendix I). To accomplish this, the following calculational rules are used:

6.2.1 Doses to a MEMBER OF THE PUBLIC via the liquid release pathway are considered to be <1 mrem/yr. (Ref: NUREG 0543).

6.2.2 Doses to a MEMBER OF THE PUBLIC due to a milk pathway will be evaluated only as can be shown to exist. Otherwise, doses via this pathway will be estimated as <1 mrem/yr.

6.2.3 Environmental sampling data which demonstrates that no pathway exists may be used to delete a pathway to man from a calculation.

6.2.4 To sum numbers represented as "less than" (<), use the value of the largest number in the group.

(i.e., <5 + <1 + <1 + <3 = 5)

6.2.5 When doses via direct radiation are added to doses via inhalation pathway, they will be calculated for the same distance in the same sector.

6.2.6 The calculational locations for a MEMBER OF THE PUBLIC will only be at residences or places of employment.

NOTE: Additional assumptions may be used to provide situation-specific parameters, provided they are documented along with their concomitant bases.

6.3 CALCULATIONS OF TOTAL BODY DOSE

Estimates will be made for each of the following exposure pathways to the same location by age class. Only those age classes known to exist at a location are considered.

6.3.1 Direct Radiation

The component of dose to a MEMBER OF THE PUBLIC due to direct radiation will be determined by:

1. Determining the direct radiation dose at the plant boundary in each sector, D_B,θ.

2. Extrapolating that dose to the calculational location as follows:

$$D_L,\theta = \frac{D_B,\theta\ (1.49\ E + 6)}{(X_L^2,\theta)}$$

D_L,θ = dose at calculational location in sector θ

1.49E + 6 = square of mean distance to the site boundary (1220 m).

X_L,θ = distance to calculational locations in sector θ in meters.

6.3.2 Inhalation Dose

The inhalation dose will be determined at the calculational locations for each age class at risk according to the methods outlined in Section 3.3 of this manual.

6.3.3 Ingestion Pathway

The dose via the ingestion pathway will be calculated at the consumer locations for the consumers at risk. If no milk pathway exists in a sector, the dose via this pathway will be treated as <1 mrem/yr.

6.3.4 Other Uranium Fuel Cycle Sources

The dose from other fuel cycle sources will be treated as <1 mrem/yr.

6.4 THYROID DOSE

The dose to the thyroid will be calculated for each sector as the sum of inhalation dose and milk ingestion dose (if existing). The calculational methods will be those identified in Section 3.3 of this manual.

6.4.1 Dose projections can incorporate planned plant operations such as power reduction or outages for the projected period.

SECTION 7.0

RADIOACTIVE EFFLUENTS CONTROLS PROGRAM

CONTAINING

OFFSITE DOSE CALCULATION MANUAL
SPECIFICATIONS (ODCMS) AND BASES

FOR

BRUNSWICK STEAM ELECTRIC PLANT

UNITS 1 AND 2

INDEX

7.1.0 USE AND APPLICATION 7.1.1-1

7.1.1 Definitions 7.1.1-1
7.1.2 Logical Connectors 7.1.2-1
7.1.3 Completion Times 7.1.3-1
7.1.4 Frequency 7.1.4-1

7.2.0 Not used 7.2.0-1

7.3 OFFSITE DOSE CALCULATION MANUAL SPECIFICATIONS

7.3.0 Offsite Dose Calculation Manual Specification (ODCMS) Applicability 7.3.0-1
7.3.0 Test Requirement (TR) Applicability 7.3.0-3
7.3.1 Radioactive Liquid Effluent Monitoring Instrumentation 7.3.1-1
7.3.2 Radioactive Gaseous Effluent Monitoring Instrumentation 7.3.2-1
7.3.3 Concentration—Liquid Effluents 7.3.3-1
7.3.4 Dose—Liquid Effluents 7.3.4-1
7.3.5 Liquid Radwaste Treatment System 7.3.5-1
7.3.6 Liquid Holdup Tanks 7.3.6-1
7.3.7 Dose Rate—Gaseous Effluents 7.3.7-1
7.3.8 Dose—Noble Gases 7.3.8-1
7.3.9 Dose—I-131, I-133, Tritium, and Radionuclides in Particulate Form 7.3.9-1
7.3.10 Gaseous Radwaste Treatment System 7.3.10-1
7.3.11 Ventilation Exhaust Treatment System 7.3.11-1
7.3.12 Explosive Gas Mixture 7.3.12-1
7.3.13 Drywell Venting or Purging 7.3.13-1
7.3.14 Total Dose (40 CFR Part 190) 7.3.14-1
7.3.15 Radiological Environmental Monitoring Program 7.3.15-1
7.3.16 Land Use Census 7.3.16-1
7.3.17 Interlaboratory Comparison Program 7.3.17-1

7.4.0 REPORTING REQUIREMENTS 7.4.0-1

7.4.1 Annual Radiological Environmental Operating Report 7.4.0-1
7.4.2 Radioactive Effluent Release Report 7.4.0-1

7.5.0 MAJOR CHANGES TO RADIOACTIVE WASTE TREATMENT SYSTEMS 7.5.0-1

BASES

B 7.3.0 Offsite Dose Calculation Manual Specification (ODCMS) Applicability ..... B 7.3.0-1

(continued)

B 7.3.0	Test Requirement (TR) Applicability	B 7.3.0-6
B 7.3.1	Radioactive Liquid Effluent Monitoring Instrumentation	B 7.3.1-1
B 7.3.2	Radioactive Gaseous Effluent Monitoring Instrumentation	B 7.3.2-1
B 7.3.3	Concentration—Liquid Effluents	B 7.3.3-1
B 7.3.4	Dose—Liquid Effluents	B 7.3.4-1
B 7.3.5	Liquid Radwaste Treatment System	B 7.3.5-1
B 7.3.6	Liquid Holdup Tanks	B 7.3.6-1
B 7.3.7	Dose Rate—Gaseous Effluents	B 7.3.7-1
B 7.3.8	Dose Rate—Noble Gases	B 7.3.8-1
B 7.3.9	Dose—I-131, I-133, Tritium, and Radionuclides in Particulate Form	B 7.3.9-1
B 7.3.10	Gaseous Radwaste Treatment System	B 7.3.10-1
B 7.3.11	Ventilation Exhaust Treatment System	B 7.3.11-1
B 7.3.12	Explosive Gas Mixture	B 7.3.12-1
B 7.3.13	Drywell Venting or Purging	B 7.3.13-1
B 7.3.14	Total Dose (40 CFR Part 190)	B 7.3.14-1
B 7.3.15	Radiological Environmental Monitoring Program	B 7.3.15-1
B 7.3.16	Land Use Census	B 7.3.16-1
B 7.3.17	Interlaboratory Comparison Program	B 7.3.17-1

LIST OF TABLES

Table 7.3.1-1 Radioactive Liquid Effluent Monitoring Instrumentation 7.3.1-7

Table 7.3.2-1 Radioactive Gaseous Effluent Monitoring Instrumentation 7.3.2-8

Table 7.3.3-1 Radioactive Liquid Waste Sampling and Analysis Program 7.3.3-3

Table 7.3.3-2 Radioactive Liquid Waste Sampling and Analysis Program for Potential Release Pathways Which Have Exceeded Trigger Levels 7.3.3-6

Table 7.3.7-1 Radioactive Gaseous Waste Sampling and Analysis Program 7.3.7-3

Table 7.3.15-1 Radiological Environmental Monitoring Program 7.3.15-7

Table 7.3.15-2 Limits for the Level of Radioactivity in Environmental Samples 7.3.15-12

Table 7.3.15-3 Detection Capabilities for Environmental Sample Analysis 7.3.15-13

LIST OF FIGURES

Figure 7.1.1-1 SITE BOUNDARY 7.1.1-5

7.1.0 USE AND APPLICATION

ODCMS 7.1.1 Definitions

NOTE
The defined terms of this section appear in capitalized type and are applicable throughout these Offsite Dose Calculation Manual Specifications and Bases.

Term	Definition
CHANNEL CALIBRATION	A CHANNEL CALIBRATION shall be the adjustment, as necessary, of the channel output such that it responds within the necessary range and accuracy to known values of the parameter that the channel monitors. The CHANNEL CALIBRATION shall encompass the entire channel, including the required sensor, alarm, display, and trip functions, and shall include the CHANNEL FUNCTIONAL TEST. The CHANNEL CALIBRATION may be performed by means of any series of sequential, overlapping, or total channel steps so that the entire channel is calibrated.
CHANNEL CHECK	A CHANNEL CHECK shall be the qualitative assessment, by observation, of channel behavior during operation. This determination shall include, where possible, comparison of the channel indication and status to other indications or status derived from independent instrument channels measuring the same parameter.
CHANNEL FUNCTIONAL TEST	A CHANNEL FUNCTIONAL TEST shall be the injection of a simulated or actual signal into the channel as close to the sensor as practicable to verify OPERABILITY, including required alarm, interlock, display, and trip functions, and channel failure trips. The CHANNEL FUNCTIONAL TEST may be performed by means of any series of sequential, overlapping, or total channel steps so that the entire channel is tested.

(continued)

ODCMS 7.1.1 Definitions (continued)

GASEOUS RADWASTE TREATMENT SYSTEM	A GASEOUS RADWASTE TREATMENT SYSTEM is any system designed and installed to reduce radioactive gaseous effluents by collecting primary coolant system offgases from the primary system and providing for delay or holdup for the purpose of reducing the total radioactivity prior to release to the environment.
LIQUID RADWASTE TREATMENT SYSTEM	A LIQUID RADWASTE TREATMENT SYSTEM is any system designed and installed to collect, treat and process radioactive liquid waste streams for reuse or for controlled discharge from the restricted area in compliance with established regulatory requirements.
MEMBER(S) OF THE PUBLIC	MEMBER(S) OF THE PUBLIC shall include all persons who are not occupationally associated with the plant. This category does not include employees of the utility, its contractors or vendors. Also excluded from this category are persons who enter the site to service equipment or to make deliveries. This category does include persons who use portions of the site for recreational, occupational or other purposes not associated with the plant.
MODE	A MODE shall be as required by Technical Specifications.
OPERABLE—OPERABILITY	A system, subsystem, division, component, or device shall be OPERABLE or have OPERABILITY when it is capable of performing its specified safety function(s) and when all necessary attendant instrumentation, controls, normal or emergency electrical power, cooling and seal water, lubrication, and other auxiliary equipment that are required for the system, subsystem, division, component, or device to perform its specified safety function(s) are also capable of performing their related support function(s).
PURGE-PURGING	PURGE or PURGING is the controlled process of discharging air or gas from a confinement to maintain temperature, pressure, humidity, concentration or other operating condition, in such a manner that replacement air or gas is required to purify the containment.

(continued)

ODCMS 7.1.1 Definitions (continued)

RATED THERMAL POWER (RTP)	RTP shall be a total reactor core heat transfer rate to the reactor coolant of 2923 MWt.
SITE BOUNDARY	The SITE BOUNDARY shall be that line beyond which the land is neither owned, nor leased nor otherwise controlled by the licensee, as defined by Figure 7.1.1-1. For the purpose of effluent release calculations, the boundary for atmospheric releases is the SITE BOUNDARY and the boundary for liquid releases is the SITE BOUNDARY prior to dilution in the Atlantic Ocean.
SOURCE CHECK	A SOURCE CHECK shall be the qualitative assessment of channel response when the channel sensor is exposed to radiation.
THERMAL POWER	THERMAL POWER shall be the total reactor core heat transfer rate to the reactor coolant.
UNRESTRICTED AREA	An UNRESTRICTED AREA shall be any area at or beyond the SITE BOUNDARY access to which is not controlled by the licensee for purpose of protection of individuals from exposure to radiation and radioactive materials or any area within the SITE BOUNDARY used for residential quarters or industrial, commercial, institutional or recreational purposes.
VENTILATION EXHAUST TREATMENT SYSTEM	A VENTILATION EXHAUST TREATMENT SYSTEM is any system designed and installed to reduce gaseous radioiodine or radioactive material in particulate form in effluents by passing ventilation or vent exhaust gases through charcoal adsorbers and/or HEPA filters for the purpose of removing iodines or particulates from the gaseous exhaust stream prior to the release to the environment. Such a system is not considered to have any effect on noble gas effluents. Engineered Safety Feature (ESF) atmospheric cleanup systems are not considered to be VENTILATION EXHAUST TREATMENT SYSTEM components.

(continued)

ODCMS 7.1.1 Definitions (continued)

VENT-VENTING	VENT or VENTING is the controlled process of discharging air or gas from a confinement to maintain temperature, pressure, humidity, concentration or other operating condition, in such a manner that replacement air or gas is not provided or required. Vent, used in system names, does not imply a VENTING process.

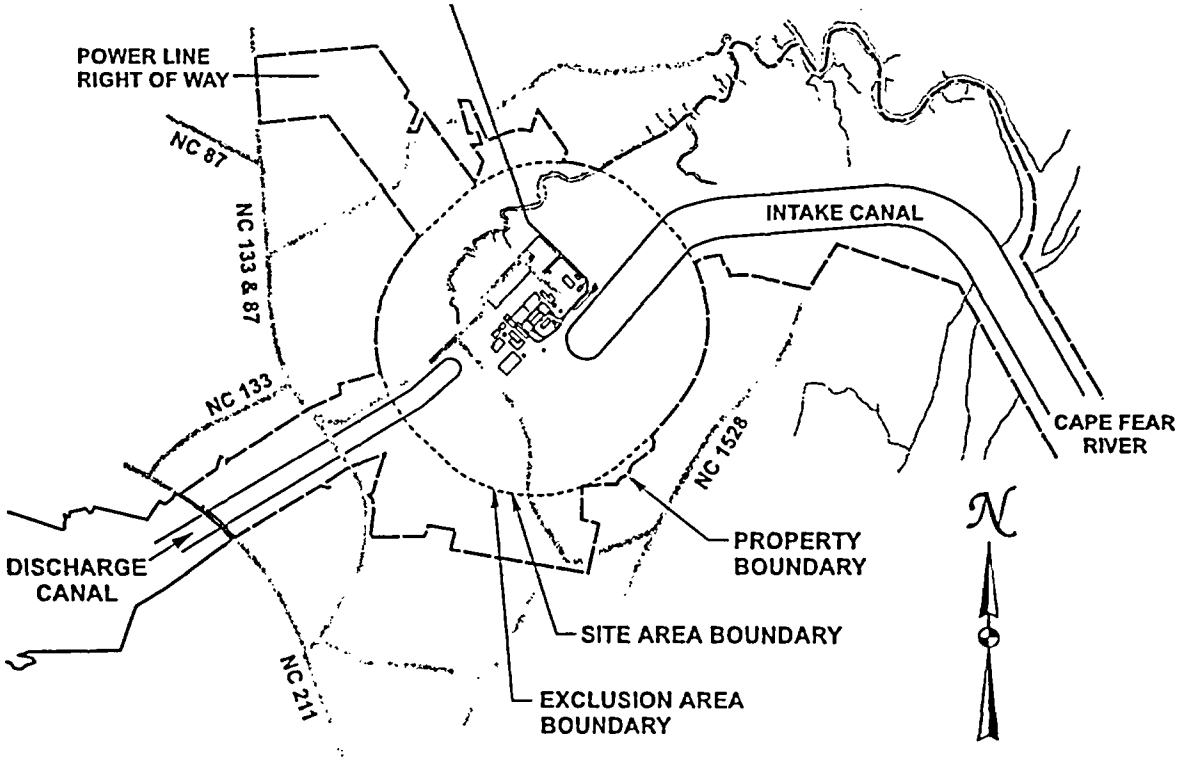

Figure 7.1.1-1 (page 1 of 1)
SITE BOUNDARY

7.1.0 USE AND APPLICATION

ODCMS 7.1.2 Logical Connectors

PURPOSE	The purpose of this section is to explain the meaning of logical connectors. Logical connectors are used in Offsite Dose Calculation Manual Specifications (ODCMS) to discriminate between, and yet connect, discrete Conditions, Required Compensatory Measures, Completion Times, Tests, and Frequencies. The only logical connectors that appear in ODCMS are AND and OR. The physical arrangement of these connectors constitutes logical conventions with specific meanings.
BACKGROUND	Several levels of logic may be used to state Required Compensatory Measures. These levels are identified by the placement (or nesting) of the logical connectors and by the number assigned to each Required Compensatory Measure. The first level of logic is identified by the first digit of the number assigned to a Required Compensatory Measure and the placement of the logical connector in the first level of nesting (i.e., left justified with the number of the Required Compensatory Measure). The successive levels of logic are identified by additional digits of the Required Compensatory Measure number and by successive indentions of the logical connectors. When logical connectors are used to state a Condition, Completion Time, Test, or Frequency, only the first level of logic is used, and the logical connector is left justified with the statement of the Condition, Completion Time, Test, or Frequency.
EXAMPLES	The following examples illustrate the use of logical connectors.

(continued)

ODCMS 7.1.2 Logical Connectors (continued)

EXAMPLES (continued)

EXAMPLE 7.1.2-1

COMPENSATORY MEASURES

CONDITION	REQUIRED COMPENSATORY MEASURE	COMPLETION TIME
A. ODCMS not met.	A.1 Verify . . . AND A.2 Restore . . .	

In this example the logical connector AND is used to indicate that when in Condition A, both Required Compensatory Measures A.1 and A.2 must be completed.

(continued)

ODCMS 7.1.2 Logical Connectors (continued)

EXAMPLES (continued)

EXAMPLE 7.1.2-2

COMPENSATORY MEASURES

CONDITION	REQUIRED COMPENSATORY MEASURE	COMPLETION TIME
A. ODCMS not met.	A.1 Trip . . . OR A.2.1 Verify . . . AND A.2.2.1 Reduce . . . OR A.2.2.2 Perform . . . OR A.3 Align . . .	

This example represents a more complicated use of logical connectors. Required Compensatory Measures A.1, A.2, and A.3 are alternative choices, only one of which must be performed as indicated by the use of the logical connector OR and the left justified placement. Any one of these three Compensatory Measures may be chosen. If A.2 is chosen, then both A.2.1 and A.2.2 must be performed as indicated by the logical connector AND. Required Compensatory Measure A.2.2 is met by performing A.2.2.1 or A.2.2.2. The indented position of the logical connector OR indicates that A.2.2.1 and A.2.2.2 are alternative choices, only one of which must be performed.

7.1.0 USE AND APPLICATION

ODCMS 7.1.3 Completion Times

PURPOSE	The purpose of this section is to establish the Completion Time convention and to provide guidance for its use.
BACKGROUND	Offsite Dose Calculation Manual Specifications (ODCMS) specify minimum requirements for unit systems or variables. The COMPENSATORY MEASURES associated with an ODCMS state Conditions that typically describe the ways in which the requirements of the ODCMS can fail to be met. Specified with each stated Condition are Required Compensatory Measure(s) and Completion Times(s).
DESCRIPTION	The Completion Time is the amount of time allowed for completing a Required Compensatory Measure. It is referenced to the time of discovery of a situation (e.g., inoperable equipment or variable not within limits) that requires entering a COMPENSATORY MEASURES Condition unless otherwise specified, providing the unit is in a MODE or specified condition stated in the Applicability of the ODCMS. Required Compensatory Measures must be completed prior to the expiration of the specified Completion Time. A COMPENSATORY MEASURES Condition remains in effect and the Required Compensatory Measures apply until the Condition no longer exists or the unit is not within the ODCMS Applicability. If situations are discovered that require entry into more than one Condition at a time within a single ODCMS (multiple Conditions), the Required Compensatory Measures for each Condition must be performed within the associated Completion Time. When in multiple Conditions, separate Completion Times are tracked for each Condition starting from the time of discovery of the situation that required entry into the Condition. Once a Condition has been entered, subsequent divisions, subsystems, components, or variables expressed in the Condition, discovered to be inoperable or not within limits, will <u>not</u> result in separate entry into the Condition unless specifically stated. The Required Compensatory Measures of the Condition continue to apply to each additional failure, with Completion Times based on initial entry into the Condition.

(continued)

ODCMS 7.1.3 Completion Times (continued)

DESCRIPTION (continued)

However, when a subsequent division, subsystem, component, or variable expressed in the Condition is discovered to be inoperable or not within limits, the Completion Time(s) may be extended. To apply this Completion Time extension, two criteria must first be met. The subsequent inoperability:

a. Must exist concurrent with the first inoperability; and

b. Must remain inoperable or not within limits after the first inoperability is resolved.

The total Completion Time allowed for completing a Required Compensatory Measure to address the subsequent inoperability shall be limited to the more restrictive of either:

a. The stated Completion Time, as measured from the initial entry into the Condition, plus an additional 24 hours; or

b. The stated Completion Time as measured from discovery of the subsequent inoperability.

The above Completion Time extension does not apply to those ODCMS that have exceptions that allow completely separate re-entry into the Condition (for each division, subsystem, component or variable expressed in the Condition) and separate tracking of Completion Times based on this re-entry. These exceptions are stated in individual ODCMS.

The above Completion Time extension does not apply to a Completion Time with a modified "time zero." This modified "time zero" may be expressed as a repetitive time (i.e., "once per 8 hours," where the Completion Time is referenced from a previous completion of the Required Compensatory Measures versus the time of Condition entry) or as a time modified by the phrase "from discovery . . ." Example 7.1.3-3 illustrates one use of this type of Completion Time. The 10 day Completion Time specified for Condition A and B in Example 7.1.3-3 may not be extended.

(continued)

ODCMS 7.1.3 Completion Times (continued)

EXAMPLES

The following examples illustrate the use of Completion Times with different types of Conditions and changing Conditions.

EXAMPLE 7.1.3-1

COMPENSATORY MEASURES

CONDITION	REQUIRED COMPENSATORY MEASURE	COMPLETION TIME
B. Required Compensatory Measure and associated Completion Time not met.	B.1 Be in MODE 3. AND B.2 Be in MODE 4.	12 hours 36 hours

Condition B has two Required Compensatory Measures. Each Required Compensatory Measure has its own separate Completion Time. Each Completion Time is referenced to the time that Condition B is entered.

The Required Compensatory Measures of Condition B are to be in MODE 3 within 12 hours AND in MODE 4 within 36 hours. A total of 12 hours is allowed for reaching MODE 3 and a total of 36 hours (**not 48 hours**) is allowed for reaching MODE 4 from the time that Condition B was entered. If MODE 3 is reached within 6 hours, the time allowed for reaching MODE 4 is the next 30 hours because the total time allowed for reaching MODE 4 is 36 hours.

If Condition B is entered while in MODE 3, the time allowed for reaching MODE 4 is the next 36 hours.

(continued)

ODCMS 7.1.3 Completion Times (continued)

EXAMPLES (continued)

EXAMPLE 7.1.3-2

COMPENSATORY MEASURES

CONDITION	REQUIRED COMPENSATORY MEASURE	COMPLETION TIME
A. One pump inoperable.	A.1 Restore pump to OPERABLE status.	7 days
B. Required Compensatory Measure and associated Completion Time not met.	B.1 Be in MODE 3. AND B.2 Be in MODE 4.	12 hours 36 hours

When a pump is declared inoperable, Condition A is entered. If the pump is not restored to OPERABLE status within 7 days, Condition B is also entered and the Completion Time clocks for Required Compensatory Measures B.1 and B.2 start. If the inoperable pump is restored to OPERABLE status after Condition B is entered, Condition A and B are exited, and therefore, the Required Compensatory Measures of Condition B may be terminated.

(continued)

ODCMS 7.1.3 Completion Times (continued)

EXAMPLES (continued)

EXAMPLE 7.1.3-3

COMPENSATORY MEASURES

CONDITION	REQUIRED COMPENSATORY MEASURE	COMPLETION TIME
A. One Function X subsystem inoperable.	A.1 Restore Function X subsystem to OPERABLE status.	7 days AND 10 days from discovery of failure to meet the ODCMS
B. One Function Y subsystem inoperable.	B.1 Restore Function Y subsystem to OPERABLE status.	72 hours AND 10 days from discovery of failure to meet the ODCMS
C. One Function X subsystem inoperable. AND One Function Y subsystem inoperable.	C.1 Restore Function X subsystem to OPERABLE status. OR C.2 Restore Function Y subsystem to OPERABLE status.	72 hours 72 hours

(continued)

ODCMS 7.1.3 Completion Times (continued)

EXAMPLES (continued)

EXAMPLE 7.1.3-3 (continued)

When one Function X subsystem and one Function Y subsystem are inoperable, Condition A and Condition B are concurrently applicable. The Completion Times for Condition A and Condition B are tracked separately for each subsystem, starting from the time each subsystem was declared inoperable and the Condition was entered. A separate Completion Time is established for Condition C and tracked from the time the second subsystem was declared inoperable (i.e., the time the situation described in Condition C was discovered).

If Required Compensatory Measure C.2 is completed within the specified Completion Time, Conditions B and C are exited. If the Completion Time for Required Compensatory Measure A.1 has not expired, operation may continue in accordance with Condition A. The remaining Completion Time in Condition A is measured from the time the affected subsystem was declared inoperable (i.e., initial entry into Condition A).

The Completion Times of Conditions A and B are modified by a logical connector, with a separate 10 day Completion Time measured from the time it was discovered the ODCMS was not met. In this example, without the separate Completion Time, it would be possible to alternate between Conditions A, B, and C in such a manner that operation could continue indefinitely without ever restoring systems to meet the ODCMS. The separate Completion Time modified by the phrase "from discovery of failure to meet the ODCMS" is designed to prevent indefinite continued operation while not meeting the ODCMS. This Completion Time allows for an exception to the normal "time zero" for beginning the Completion Time "clock". In this instance, the Completion Time "time zero" is specified as commencing at the time the ODCMS was initially not met, instead of at the time the associated Condition was entered.

(continued)

ODCMS 7.1.3 Completion Times (continued)

EXAMPLES (continued)

EXAMPLE 7.1.3-4

COMPENSATORY MEASURES

CONDITION	REQUIRED COMPENSATORY MEASURE	COMPLETION TIME
A. One or more valves inoperable.	A.1 Restore valve(s) to OPERABLE status.	4 hours
B. Required Compensatory Measure and associated Completion Time not met.	B.1 Be in MODE 3. AND B.2 Be in MODE 4.	12 hours 36 hours

A single Completion Time is used for any number of valves inoperable at the same time. The Completion Time associated with Condition A is based on the initial entry into Condition A and is not tracked on a per valve basis. Declaring subsequent valves inoperable, while Condition A is still in effect, does not trigger the tracking of separate Completion Times.

Once one of the valves has been restored to OPERABLE status, the Condition A Completion Time is not reset, but continues from the time the first valve was declared inoperable. The Completion Time may be extended if the valve restored to OPERABLE status was the first inoperable valve. The Condition A Completion Time may be extended for up to 4 hours provided this does not result in any subsequent valve being inoperable for > 4 hours.

If the Completion Time of 4 hours (plus the extension) expires while one or more valves are still inoperable, Condition B is entered.

(continued)

ODCMS 7.1.3 Completion Times (continued)

EXAMPLES (continued)

EXAMPLE 7.1.3-5

COMPENSATORY MEASURES

NOTE
Separate Condition entry is allowed for each inoperable valve.

CONDITION	REQUIRED COMPENSATORY MEASURE	COMPLETION TIME
A. One or more valves inoperable.	A.1 Restore valve to OPERABLE status.	4 hours
B. Required Compensatory Measure and associated Completion Time not met.	B.1 Be in MODE 3. AND B.2 Be in MODE 4.	12 hours 36 hours

The Note above the COMPENSATORY MEASURES Table is a method of modifying how the Completion Time is tracked. If this method of modifying how the Completion Time is tracked was applicable only to a specific Condition, the Note would appear in that Condition rather than at the top of the COMPENSATORY MEASURES Table.

The Note allows Condition A to be entered separately for each inoperable valve, and Completion Times tracked on a per valve basis. When a valve is declared inoperable, Condition A is entered and its Completion Time starts. If subsequent valves are declared inoperable, Condition A is entered for each valve and separate Completion Times start and are tracked for each valve.

(continued)

ODCMS 7.1.3 Completion Times (continued)

EXAMPLES (continued)

EXAMPLE 7.1.3-5 (continued)

If the Completion Time associated with a valve in Condition A expires, Condition B is entered for that valve. If the Completion Times associated with subsequent valves in Condition A expire, Condition B is entered separately for each valve and separate Completion Times start and are tracked for each valve. If a valve that caused entry into Condition B is restored to OPERABLE status, Condition B is exited for that valve.

Since the Note in this example allows multiple Condition entry and tracking of separate Completion Times, Completion Time extensions do not apply.

EXAMPLE 7.1.3-6

COMPENSATORY MEASURES

CONDITION	REQUIRED COMPENSATORY MEASURE	COMPLETION TIME
A. One channel inoperable.	A.1 Perform TR 7.3.x.x.	Once per 8 hours
	OR	
	A.2 Reduce THERMAL POWER to ≤ 50% RTP.	8 hours
B. Required Compensatory Measure and associated Completion Time not met.	B.1 Be in MODE 3.	12 hours

(continued)

ODCMS 7.1.3 Completion Times (continued)

EXAMPLES (continued)

EXAMPLE 7.1.3-6 (continued)

Entry into Condition A offers a choice between Required Compensatory Measure A.1 or A.2. Required Compensatory Measure A.1 has a "once per" Completion Time, which qualifies for the 25% extension, per TR 7.3.0.2, to each performance after the initial performance. The initial 8 hour interval of Required Compensatory Measure A.1 begins when Condition A is entered and the initial performance of Required Compensatory Measure A.1 must be completed within the first 8 hour interval. If Required Compensatory Measure A.1 is followed and the Required Compensatory Measure is not met within the Completion Time (plus the extension allowed by TR 7.3.0.2), Condition B is entered. If Required Compensatory Measure A.2 is followed and the Completion Time of 8 hours is not met, Condition B is entered.

If after entry into Condition B, Required Compensatory Measure A.1 or A.2 is met, Condition B is exited and operation may then continue in Condition A.

(continued)

ODCMS 7.1.3 Completion Times (continued)

EXAMPLES (continued)

EXAMPLE 7.1.3-7

COMPENSATORY MEASURES

CONDITION	REQUIRED COMPENSATORY MEASURE	COMPLETION TIME
A. One subsystem inoperable.	A.1 Verify affected subsystem isolated.	1 hour AND Once per 8 hours thereafter
	AND	
	A.2 Restore subsystem to OPERABLE status.	72 hours
B. Required Compensatory Measure and associated Completion Time not met.	B.1 Be in MODE 3.	12 hours
	AND	
	B.2 Be in MODE 4.	36 hours

Required Compensatory Measure A.1 has two Completion Times. The 1 hour Completion Time begins at the time the Condition is entered and each "Once per 8 hours thereafter" interval begins upon performance of Required Compensatory Measure A.1.

If after Condition A is entered, Required Compensatory Measure A.1 is not met within either the initial 1 hour or any subsequent 8 hour interval from the previous performance (plus the extension allowed by TR 7.3.0.2), Condition B is entered. The Completion Time clock for Condition A does not stop after Condition B is entered, but continues

(continued)

ODCMS 7.1.3 Completion Times (continued)

EXAMPLES (continued)	EXAMPLE 7.1.3-7 (continued) from the time Condition A was initially entered. If Required Compensatory Measure A.1 is met after Condition B is entered, Condition B is exited and operation may continue in accordance with Condition A, provided the Completion Time for Required Compensatory Measure A.2 has not expired.
IMMEDIATE COMPLETION TIME	When "Immediately" is used as a Completion Time, the Required Compensatory Measure should be pursued without delay and in a controlled manner.

7.1.0 USE AND APPLICATION

ODCMS 7.1.4 Frequency

PURPOSE	The purpose of this section is to define the proper use and application of Frequency requirements.

DESCRIPTION

Each Test Requirement (TR) of the Offsite Dose Calculation Manual has a specified Frequency in which the Test must be met in order to meet the associated Offsite Dose Calculation Manual Specification (ODCMS). An understanding of the correct application of the specified Frequency is necessary for compliance with the TR.

The "specified Frequency" is referred to throughout this section and each of the Specifications of Section 7.3.0, Test Requirement (TR) Applicability. The "specified Frequency" consists of the requirements of the Frequency column of each TR, as well as certain Notes in the Test column that modify performance requirements.

Sometimes special situations dictate when the requirements of a Test are to be met. They are "otherwise stated" conditions allowed by TR 7.3.0.1. They may be stated as clarifying Notes in the Test, as part of the Test, or both. Example 7.1.4-4 discusses these special situations.

Situations where a Test could be required (i.e., its Frequency could expire), but where it is not possible or not desired that it be performed until sometime after the associated ODCMS is within its Applicability, represent potential TR 7.3.0.4 conflicts. To avoid these conflicts, the TR (i.e., the Test or the Frequency) is stated such that it is only "required" when it can be and should be performed. With a TR satisfied, TR 7.3.0.4 imposes no restriction.

The use of "met or "performed" in these instances conveys specific meanings. A Test is "met" only when the acceptance criteria are satisfied. Known failure of the requirements of a Test, even without a Test specifically being "performed," constitutes a Test not "met." "Performance" refers only to the requirement to specifically determine the

(continued)

ODCMS 7.1.4 Frequency (continued)

DESCRIPTION (continued)

ability to meet the acceptance criteria. TR 7.3.0.4 restrictions would not apply if both the following conditions are satisfied:

a. The Test is not required to be performed; and

b. The Test is not required to be met or, even if required to be met, is not known to be failed.

EXAMPLES

The following examples illustrate the various ways that Frequencies are specified. In these examples, the Applicability of the ODCMS (ODCMS not shown) is MODES 1, 2, and 3.

EXAMPLE 7.1.4-1

TEST REQUIREMENTS

TEST	FREQUENCY
Perform CHANNEL CHECK.	12 hours

Example 7.1.4-1 contains the type of TR most often encountered in the ODCMS. The Frequency specifies an interval (12 hours) during which the associated Test must be performed at least one time. Performance of the Test initiates the subsequent interval. Although the Frequency is stated as 12 hours, an extension of the time interval to 1.25 times the interval specified in the Frequency is allowed by TR 7.3.0.2 for operational flexibility. The measurement of this interval continues at all times, even when the TR is not required to be met per TR 7.3.0.1 (such as when the equipment is inoperable, a variable is outside specified limits, or the unit is outside the Applicability of the ODCMS). If the interval specified by TR 7.3.0.2 is exceeded while the unit is in a MODE or other specified condition in the Applicability of the ODCMS, and the performance of the Test is not otherwise modified (refer to Examples 7.1.4-3 and 7.1.4-4), then TR 7.3.0.3 becomes applicable.

(continued)

ODCMS 7.1.4 Frequency (continued)

EXAMPLES (continued)

EXAMPLE 7.1.4-1 (continued)

If the interval as specified by TR 7.3.0.2 is exceeded while the unit is not in a MODE or other specified condition in the Applicability of the ODCMS for which performance of the TR is required, the Test must be performed within the Frequency requirements of TR 7.3.0.2 prior to entry into the MODE or other specified condition. Failure to do so would result in a violation of TR 7.3.0.4.

EXAMPLE 7.1.4-2

TEST REQUIREMENTS

TEST	FREQUENCY
Verify flow is within limits.	Once within 12 hours after ≥ 25% RTP AND 24 hours thereafter

Example 7.1.4-2 has two Frequencies. The first is a one time performance Frequency, and the second is of the type shown in Example 7.1.4-1. The logical connector "AND" indicates that both Frequency requirements must be met. Each time reactor power is increased from a power level < 25% RTP to≥ 25% RTP, the Test must be performed within 12 hours.

The use of "once" indicates a single performance will satisfy the specified Frequency (assuming no other Frequencies are connected by "AND"). This type of Frequency does not qualify for the extension allowed by TR 7.3.0.2.

(continued)

ODCMS 7.1.4 Frequency (continued)

EXAMPLES (continued)

EXAMPLE 7.1.4-2 (continued)

"Thereafter" indicates future performances must be established per TR 7.3.0.2, but only after a specified condition is first met (i.e., the "once" performance in this example). If reactor power decreases to < 25% RTP, the measurement of both intervals stops. New intervals start upon reactor power reaching 25% RTP.

EXAMPLE 7.1.4-3

TEST REQUIREMENTS

TEST	FREQUENCY
NOTE Not required to be performed until 12 hours after ≥ 25% RTP.	
Perform channel adjustment.	7 days

The interval continues whether or not the unit operation is < 25% RTP between performances.

As the Note modifies the required performance of the Test, it is construed to be part of the "specified Frequency." Should the 7 day interval be exceeded while operation is < 25% RTP, this Note allows 12 hours after power reaches ≥ 25% RTP to perform the Test. The Test is still considered to be within the "specified Frequency." Therefore, if the Test were not performed within the 7 day interval (plus the extension allowed by TR 7.3.0.2), but operation was < 25% RTP, it would not constitute a failure of the TR or failure to meet the ODCMS. Also, no violation of TR 7.3.0.4 occurs when changing MODES, even with the 7 day Frequency not met, provided operation does not exceed 12 hours with power ≥ 25% RTP.

(continued)

ODCMS 7.1.4 Frequency (continued)

EXAMPLES (continued)

EXAMPLE 7.1.4-3 (continued)

Once the unit reaches 25% RTP, 12 hours would be allowed for completing the Test. If the Test were not performed within this 12 hour interval, there would then be a failure to perform a Test within the specified Frequency, and the provisions of TR 7.3.0.3 would apply.

EXAMPLE 7.1.4-4

TEST REQUIREMENTS

TEST	FREQUENCY
NOTE Only required to be met in MODE 1.	
Verify leakage rates are within limits.	24 hours

Example 7.1.4-4 specifies that the requirements of this Test do not have to be met until the unit is in MODE 1. The interval measurement for the Frequency of this Test continues at all times, as described in Example 7.1.4-1. However, the Note constitutes an "otherwise stated" exception to the Applicability of this Test. Therefore, if the Test were not performed within the 24 hour (plus the extension allowed by TR 7.3.0.2) interval, but the unit was not in MODE 1, there would be no failure of the TR nor failure to meet the ODCMS. Therefore, no violation of TR 7.3.0.4 occurs when changing MODES, even with the 24 hour Frequency exceeded, provided the MODE change was not made into MODE 1. Prior to entering MODE 1 (assuming again that the 24 hour Frequency were not met), TR 7.3.0.4 would require satisfying the TR.

7.2.0 Not used.

7.3.0 OFFSITE DOSE CALCULATION MANUAL SPECIFICATION (ODCMS) APPLICABILITY

ODCMS 7.3.0.1	ODCMSs shall be met during the MODES or other specified conditions in the Applicability, except as provided in ODCMS 7.3.0.2.
ODCMS 7.3.0.2	Upon discovery of a failure to meet an ODCMS, the required Compensatory Measures of the associated Conditions shall be met, except as provided in ODCMS 7.3.0.5. If the ODCMS is met or is no longer applicable prior to expiration of the specified Completion Time(s), completion of the Required Compensatory measure(s) is not required, unless otherwise stated.
ODCMS 7.3.0.3	Not used.
ODCMS 7.3.0.4	When an ODCMS is not met, entry into a MODE or other specified condition in the Applicability shall not be made except when the associated COMPENSATORY MEASURES to be entered permit continued operation in the MODE or other specified condition in the Applicability for an unlimited period of time. This ODCMS shall not prevent changes in MODES or other specified conditions in the Applicability that are required to comply with COMPENSATORY MEASURES, or that are part of a shutdown of the unit. Exceptions to this ODCMS are stated in the individual ODCMSs. These exceptions allow entry into MODES or other specified conditions in the Applicability when the associated COMPENSATORY MEASURES to be entered allow unit operation in the MODE or other specified condition in the Applicability only for a limited period of time.
ODCMS 7.3.0.5	Equipment removed from service or declared inoperable to comply with COMPENSATORY MEASURES may be returned to service under administrative control solely to perform testing required to demonstrate its OPERABILITY or the OPERABILITY of other equipment. This is an exception to ODCMS 7.3.0.2 for the system returned to service under administrative control to perform the required testing.

(continued)

7.3.0 ODCMS APPLICABILITY (continued)

ODCMS 7.3.0.6 ODCMSs and associated COMPENSATORY MEASURES shall apply to both units except as follows:

a. Whenever the ODCMS refers to systems or components which are not shared by both units, the ODCMS and associated Applicability and COMPENSATORY MEASURES shall apply to each unit individually (e.g., in the event of an inoperability in a non-shared system, the appropriate COMPENSATORY MEASURES will apply only to the unit with the inoperable system);

b. Whenever the ODCMS only applies to one unit, this will be identified in the Applicability of the ODCMS; and

c. Whenever certain portions of the ODCMS, Applicability, or COMPENSATORY MEASURES contain operating parameters, setpoints, etc., which are different for each unit, this will be identified in parentheses, notes, or the body of the requirement.

7.3.0 TEST REQUIREMENT (TR) APPLICABILITY

TR 7.3.0.1	TRs shall be met during the MODES or other specified conditions in the Applicability for individual ODCMSs, unless otherwise stated in the TR. Failure to meet a Test whether such failure is experienced during the performance of the Test or between performances of the Test, shall be failure to meet the ODCMS. Failure to perform a Test within the specified Frequency shall be failure to meet the TRMS except as provided in TR 7.3.0.3. Tests do not have to be performed on inoperable equipment or variables outside specified limits.
TR 7.3.0.2	The specified Frequency for each TR is met if the Test is performed within 1.25 times the interval specified in the Frequency, as measured from the previous performance or as measured from the time a specified condition of the Frequency is met. For Frequencies specified as "once," the above interval extension does not apply. If a Completion Time requires periodic performance on a "once per ..." basis, the above Frequency extension applies to each performance after the initial performance. Exceptions to this ODCMS are stated in the individual ODCMSs.
TR 7.3.0.3	If it is discovered that a Test was not performed within its specified Frequency, then compliance with the requirement to declare the ODCMS not met may be delayed, from the time of discovery, up to 24 hours or up to the limit of the specified Frequency, whichever is less. This delay period is permitted to allow performance of the Test. If the Test is not performed within the delay period, the ODCMS must immediately be declared not met, and the applicable Condition(s) must be entered. When the Test is performed within the delay period and the Test is not met, the ODCMS must immediately be declared not met, and the applicable Condition(s) must be entered.

(continued)

7.3.0 TR APPLICABILITY (continued)

TR 7.3.0.4 Entry into a MODE or other specified condition in the Applicability of an ODCMS shall not be made unless the ODCMS's Tests have been met within their specified Frequency. This provision shall not prevent entry into MODES or other specified conditions in the Applicability that are required to comply with COMPENSATORY MEASURES or that are part of a shutdown of the unit.

TR 7.3.0.5 TRs shall apply to both units (e.g., a single Test performed at the specified Frequency will satisfy the TR for both units) except as follows:

a. Whenever the ODCMS refers to systems or components which are not shared by both units, the associated TR shall apply to each unit individually (e.g., individual tests must be performed on each of the two units' non-shared systems or components; a single Test on a non-shared system of one unit performed at the specified Frequency will <u>not</u> satisfy the TR for the non-shared system of the other unit);

b. Whenever a TR only applies to one unit, this will be identified by a note to the TR; and

c. Whenever certain portions of the TRs, contain test parameters, acceptance criteria, or frequencies which are different for each unit, this will be identified in parentheses, notes, or the body of the requirement.

7.3.1 RADIOACTIVE LIQUID EFFLUENT MONITORING INSTRUMENTATION

ODCMS 7.3.1 The radioactive liquid effluent monitoring instrumentation channels in Table 7.3.1-1 shall be OPERABLE.

APPLICABILITY: In accordance with Table 7.3.1-1.

COMPENSATORY MEASURES

NOTE
Separate Condition entry is allowed for each required channel.

CONDITION	REQUIRED COMPENSATORY MEASURE		COMPLETION TIME
A. One or more radioactive liquid effluent monitoring instrumentation channels inoperable.	A.1	Enter the Condition referenced in Table 7.3.1-1 for the channel.	Immediately
B. As required by Required Compensatory Measure A.1 and referenced in Table 7.3.1-1.	B.1	Perform TR 7.3.3.1 on two independent samples of the batch to be released.	Prior to release through the liquid radwaste effluent line
	AND		
	B.2	Verify the associated release rate calculations and the discharge valve lineup using two qualified members of the technical staff.	Prior to release through the liquid radwaste effluent line
	AND		
	B.3	Restore the channel to OPERABLE status.	30 days

(continued)

COMPENSATORY MEASURES (continued)

CONDITION	REQUIRED COMPENSATORY MEASURE		COMPLETION TIME
C. As required by Required Compensatory Measure A.1 and referenced in Table 7.3.1-1.	C.1	Estimate the flow rate through the associated pathway using pump performance curves or tank level indicators.	Once per 4 hours during releases through the associated line
	AND		
	C.2	Restore the channel to OPERABLE status.	30 days
D. As required by Required Compensatory Measure A.1 and referenced in Table 7.3.1-1.	D.1	Collect and analyze a grab sample for gross radioactivity (beta or gamma) of the associated effluent. The LLD shall be ≤ 1.0 E-7 μCi/gm.	Once per 12 hours
	AND		
	D.2	Restore the channel to OPERABLE status.	30 days
E. As required by Required Compensatory Measure A.1 and referenced in Table 7.3.1-1.	E.1	Collect and analyze a grab sample for principal gamma emitters per Table 7.3.3-1.	Once per 24 hours
	AND		
	E.2	Restore the channel to OPERABLE status.	30 days

(continued)

COMPENSATORY MEASURES (continued)

CONDITION	REQUIRED COMPENSATORY MEASURE		COMPLETION TIME
F. As required by Required Compensatory Measure A.1 and referenced in Table 7.3.1-1.	F.1	Estimate the flow rate through the associated pathway using the V-notch weir or another acceptable method.	Once per 24 hours
	AND		
	F.2	Restore the channel to OPERABLE status.	30 days
G. As required by Required Compensatory Measure A.1 and referenced in Table 7.3.1-1.	G.1	Estimate the tank liquid level.	Once per 8 hours during all liquid additions and deletions to and from the tank
	AND		
	G.2	Restore the channel to OPERABLE status.	30 days
H. Required Compensatory Measure B.1, B.2, C.1, D.1, E.1, F.1, or G.1 and associated Completion Time not met.	H.1	Suspend effluent releases via the associated pathway.	Immediately
	AND		
	H.2	NOTE Only applicable for Function 6.	
		Suspend liquid additions to the Condensate Storage Tank.	Immediately

(continued)

COMPENSATORY MEASURES (continued)

CONDITION	REQUIRED COMPENSATORY MEASURE	COMPLETION TIME
I. Required Compensatory Measure B.3, C.2, D.2, E.2, F.2, or G.2 and associated Completion Time not met.	I.1 Prepare and submit, in the Radioactive Effluent Release Report, the reason the channel was not restored to OPERABLE status within 30 days.	Upon submittal of current calendar year Radioactive Effluent Release Report

TEST REQUIREMENTS

NOTE
Refer to Table 7.3.1-1 to determine which TRs apply for each Radioactive Liquid Effluent Monitoring Instrumentation Function.

	TEST	FREQUENCY
TR 7.3.1.1	NOTE For Function 6, only required to be met during liquid additions to the tank. Perform CHANNEL CHECK.	24 hours
TR 7.3.1.2	NOTE Only required to be met during continuous, periodic, or batch releases. Verify indication of flow.	24 hours

(continued)

TEST REQUIREMENTS (continued)

	TEST	FREQUENCY
TR 7.3.1.3	Perform SOURCE CHECK.	31 days
TR 7.3.1.4	Perform CHANNEL FUNCTIONAL TEST, including demonstration of automatic isolation of the pathway and control room annunciation in response to any of the following: a. Alarm/trip setpoint exceeded. b. Circuit failure (High—voltage low). c. Downscale failure. d. Instrument controls not set in "operate" mode.	92 days
TR 7.3.1.5	Perform CHANNEL FUNCTIONAL TEST.	92 days
TR 7.3.1.6	Perform CHANNEL FUNCTIONAL TEST, including demonstration of control room annunciation in response to any of the following: a. Alarm/trip setpoint exceeded. b. Circuit failure (High—voltage low). c. Downscale failure. d. Instrument controls not set in "operate" mode.	92 days

(continued)

TEST REQUIREMENTS (continued)

TEST		FREQUENCY
TR 7.3.1.7	NOTE For Functions 1 and 3, previously established calibration procedures or sources that have been related to the initial CHANNEL CALIBRATION shall be used.	
	Perform CHANNEL CALIBRATION.	24 months

Table 7.3.1-1 (page 1 of 1)
Radioactive Liquid Effluent Monitoring Instrumentation

FUNCTION[a]	APPLICABLE MODES OR OTHER SPECIFIED CONDITIONS	REQUIRED CHANNELS PER FUNCTION	CONDITIONS REFERENCED FROM REQUIRED COMPENSATORY MEASURES A.1	TEST REQUIREMENTS	ALARM/ TRIP SETPOINT VALUE
1. Liquid Radwaste Radioactivity Effluent Monitor[b]	At all times	1	B	TR 7.3.1.1 TR 7.3.1.3 TR 7.3.1.4 TR 7.3.1.7	(c)
2. Liquid Radwaste Effluent Flow Measurement Device	At all times	1	C	TR 7.3.1.2 TR 7.3.1.5 TR 7.3.1.7	NA
3. Main Service Water System Effluent Radioactivity Monitor	At all times	1	D	TR 7.3.1.1 TR 7.3.1.3 TR 7.3.1.6 TR 7.3.1.7	(c)
4. Stabilization Pond Effluent Composite Sampler	(d)	1	E	TR 7.3.1.1 TR 7.3.1.5 TR 7.3.1.7	NA[e]
5. Stabilization Pond Effluent Flow Measurement Device	(d)	1	F	TR 7.3.1.1 TR 7.3.1.5 TR 7.3.1.7	NA
6. Condensate Storage Tank Level Indicating Device	At all times	1	G	TR 7.3.1.1 TR 7.3.1.5 TR 7.3.1.7	NA[f]

(a) Specific instrumentation identification numbers are provided in Appendix E.

(b) Provides alarm and automatic termination of release.

© Alarm/trip setpoints shall be determined in accordance with ODCM methodology and set to ensure the limits of ODCMS 7.3.3, "Concentration—Liquid Effluents," are not exceeded.

(d) At all times other than when the line is valved out and locked.

(e) Flow Totalizer 2-DST-FQIS-5026 provides a trip signal to the composite sampler that will initiate sampling.

(f) 1(2) CO-LIT-1160 provides local level indication and also provides a signal to 1(2) CO-LI-1160A and 1(2) CO-LI-1160B.

7.3.2 RADIOACTIVE GASEOUS EFFLUENT MONITORING INSTRUMENTATION

ODCMS 7.3.2 The radioactive gaseous effluent monitoring instrumentation channels in Table 7.3.2-1 shall be OPERABLE.

APPLICABILITY: In accordance with Table 7.3.2-1.

COMPENSATORY MEASURES

NOTE
Separate Condition entry is allowed for each required channel.

CONDITION	REQUIRED COMPENSATORY MEASURE		COMPLETION TIME
A. One or more radioactive gaseous effluent monitoring instrumentation channels inoperable.	A.1	Enter the Condition referenced in Table 7.3.2-1 for the channel.	Immediately
B. As required by Required Compensatory Measure A.1 and referenced in Table 7.3.2-1.	B.1	Take a grab sample at the associated sample location.	Once per 12 hours
	AND		
	B.2	Analyze the grab sample required by Required Compensatory Measure B.1 for gross noble gas activity.	24 hours after completion of Required Compensatory Measure B.1
	AND		
	B.3	Restore the channel to OPERABLE status.	30 days

(continued)

COMPENSATORY MEASURES (continued)

CONDITION	REQUIRED COMPENSATORY MEASURE		COMPLETION TIME
C. As required by Required Compensatory Measure A.1 and referenced in Table 7.3.2-1.	C.1.1	Initiate actions to establish auxiliary sampling equipment to continuously collect samples from the associated effluent release pathway as required by Table 7.3.7-1.	Immediately
	OR		
	C.1.2	NOTE Only applicable for ODCM test requirements, sample analysis, or system purging. Reference ODCMS 7.3.0.5 for post maintenance test requirements.	
		Initiate continuous sample collection from associated release pathway as required by Table 7.3.7-1 with auxiliary sampling equipment.	45 minutes
	AND		
	C.2	Restore the channel to OPERABLE status.	30 days

(continued)

COMPENSATORY MEASURES (continued)

CONDITION	REQUIRED COMPENSATORY MEASURE		COMPLETION TIME
D. As required by Required Compensatory Measure A.1 and referenced in Table 7.3.2-1.	D.1	Estimate the flow rate through the associated pathway.	Once per 8 hours
	AND		
	D.2	Restore the channel to OPERABLE status.	30 days
E. Required Compensatory Measure B.1, B.2, C.1.1, C.1.2, and D.1 and associated Completion Time not met.	E.1	Suspend effluent releases via the associated pathway.	Immediately

(continued)

COMPENSATORY MEASURES (continued)

CONDITION	REQUIRED COMPENSATORY MEASURE		COMPLETION TIME
F. As required by Required Compensatory Measure A.1 and referenced in Table 7.3.2-1.	NOTE Required Compensatory Measures F.1 and F.2 are only applicable if two channels are inoperable in the operating recombiner train.		
	F.1	Take a grab sample from the operating recombiner train.	Once per 24 hours
	AND		
	F.2	Analyze the grab sample required by Required Compensatory Measure F.1.	4 hours after completion of Required Compensatory Measure F.1
	AND		
	F.3	Verify proper functioning of the operating recombiner train by monitoring recombiner temperature.	In accordance with approved procedures
	AND		
	F.4	Restore the channel(s) to OPERABLE status.	30 days
G. Required Compensatory Measure F.1, F.2, or F.3 and associated Completion Time not met.	G.1	Suspend operation of the associated recombiner train.	Immediately

(continued)

COMPENSATORY MEASURES (continued)

CONDITION	REQUIRED COMPENSATORY MEASURE		COMPLETION TIME
H. Required Compensatory Measure B.3, C.2, D.2, or F.4 and associated Completion Time not met.	H.1	Prepare and submit in the Radioactive Effluent Release Report, the reason the channel was not restored to OPERABLE status within 30 days.	Upon submittal of current calendar year Radioactive Effluent Release Report
I. As required by Required Compensatory Measure A.1 and referenced in Table 7.3.2-1.	I.1	Verify GASEOUS RADWASTE TREATMENT SYSTEM is not bypassed.	Immediately
	AND		
	I.2	Verify the main stack effluent noble gas monitor is OPERABLE.	Immediately
	AND		
	I.3	Restore the channel to OPERABLE status.	72 hours
J. Required Compensatory Measure and associated Completion Time of Condition I not met.	J.1	Be in MODE 2.	12 hours
	AND		
	J.2	Prepare and submit in the Radioactive Effluent Release Report, the reason the channel was not restored to OPERABLE status within 72 hours.	Upon submittal of current calendar year Radioactive Effluent Release Report

(continued)

COMPENSATORY MEASURES (continued)

CONDITION	REQUIRED COMPENSATORY MEASURE	COMPLETION TIME
K. As required by Required Compensatory Measure A.1 and referenced in Table 7.3.2-1.	K.1 Suspend effluent releases via the associated pathway.	Immediately

TEST REQUIREMENTS

NOTE
Refer to Table 7.3.2-1 to determine which TRs apply for each Radioactive Gaseous Effluent Monitoring Instrumentation Function.

TEST		FREQUENCY
TR 7.3.2.1	Perform CHANNEL CHECK.	24 hours
TR 7.3.2.2	Perform CHANNEL CHECK.	7 days
TR 7.3.2.3	Perform SOURCE CHECK.	31 days
TR 7.3.2.4	Perform CHANNEL FUNCTIONAL TEST.	31 days

(continued)

TEST REQUIREMENTS (continued)

	TEST	FREQUENCY
TR 7.3.2.5	Perform CHANNEL FUNCTIONAL TEST, including demonstration of control room annunciation in response to any of the following: a. Alarm/trip setpoint exceeded. b. Downscale failure. c. Instrument controls not set in "operate" mode.	92 days
TR 7.3.2.6	Perform CHANNEL FUNCTIONAL TEST.	92 days
TR 7.3.2.7	Perform CHANNEL FUNCTIONAL TEST; including demonstration of control room annunciation in response to any of the following: a. Alarm/trip setpoint exceeded. b. Downscale failure.	92 days
TR 7.3.2.8	Perform CHANNEL FUNCTIONAL TEST including control room annunciation in response to any of the following: a. Alarm/trip setpoint exceeded. b. Circuit failure (High—voltage low). c. Downscale failure. d. Instrument controls not set in "operate" mode.	92 days

(continued)

TEST REQUIREMENTS (continued)

	TEST	FREQUENCY
TR 7.3.2.9	Perform CHANNEL CALIBRATION. The CHANNEL CALIBRATION shall include the use of standard gas samples containing a nominal: a. Two volume percent hydrogen, balance nitrogen; and b. Four volume percent hydrogen, balance nitrogen.	92 days
TR 7.3.2.9	NOTE For Functions 1.a, 2.a, 3.a, 4, and 6, previously established calibration procedures or sources that have been related to the initial CHANNEL CALIBRATION shall be used. Perform CHANNEL CALIBRATION.	24 months

Table 7.3.2-1 (page 1 of 4)
Radioactive Gaseous Effluent Monitoring Instrumentation

FUNCTION[a]	APPLICABLE MODES OR OTHER SPECIFIED CONDITIONS	REQUIRED CHANNELS PER FUNCTION	CONDITIONS REFERENCED FROM REQUIRED COMPENSATORY MEASURES A.1	TEST REQUIREMENTS	ALARM/TRIP SETPOINT VALUE
1. Main Stack Monitoring System					
a. Noble Gas Activity Monitor	At all times	1	B	TR 7.3.2.1 TR 7.3.2.3 TR 7.3.2.5 TR 7.3.2.10	(b)
b. Iodine Sampler Cartridge	At all times	1	C	TR 7.3.2.2	NA
c. Particulate Sampler Filter	At all times	1	C	TR 7.3.2.2	NA
d. System Effluent Flow Rate Measurement Device	At all times	1	D	TR 7.3.2.1 TR 7.3.2.6 TR 7.3.2.10	NA
e. Sampler Flow Rate Measurement Device	At all times	1	D	TR 7.3.2.1 TR 7.3.2.6 TR 7.3.2.10	(c)
2. Reactor Building Ventilation Monitoring System					
a. Noble Gas Activity Monitor	At all times	1	B	TR 7.3.2.1 TR 7.3.2.3 TR 7.3.2.7 TR 7.3.2.10	(b)
b. Iodine Sampler Cartridge	At all times	1	C	TR 7.3.2.2	NA
c. Particulate Sampler Filter	At all times	1	C	TR 7.3.2.2	NA
d. System Effluent Flow Rate Measurement Device	At all times	1	D	TR 7.3.2.1 TR 7.3.2.6 TR 7.3.2.10	NA

(continued)

(a) Specific instrumentation identification numbers are provided in Appendix E.

(b) Alarm/trip setpoints shall be determined in accordance with ODCM methodology and set to ensure the limits of ODCMS 7.3.7, "Dose Rate—Gaseous Effluents," are not exceeded.

(c) Alarm/trip setpoints shall be determined in accordance with associated design specification(s) and set to ensure the limits of ODCMS 7.3.7, "Dose Rate—Gaseous Effluents," are not exceeded.

Table 7.3.2-1 (page 2 of 4)
Radioactive Gaseous Effluent Monitoring Instrumentation

FUNCTION[a]	APPLICABLE MODES OR OTHER SPECIFIED CONDITIONS	REQUIRED CHANNELS PER FUNCTION	CONDITIONS REFERENCED FROM REQUIRED COMPENSATORY MEASURES A.1	TEST REQUIREMENTS	ALARM/TRIP SETPOINT VALUE
2. Reactor Building Ventilation Monitoring System (continued)					
e. Sampler Flow Rate Measurement Device	At all times	1	D	TR 7.3.2.1 TR 7.3.2.6 TR 7.3.2.10	(c)
3. Turbine Building Ventilation Monitoring System					
a. Noble Gas Activity Monitor	At all times	1	B	TR 7.3.2.1 TR 7.3.2.3 TR 7.3.2.5 TR 7.3.2.10	(b)
b. Iodine Sampler Cartridge	At all times	1	C	TR 7.3.2.2	NA
c. Particulate Sampler Filter	At all times	1	C	TR 7.3.2.2	NA
d. System Effluent Flow Rate Measurement Device	At all times	1	D	TR 7.3.2.1 TR 7.3.2.6 TR 7.3.2.10	NA
e. Sampler Flow Rate Measurement Device	At all times	1	D	TR 7.3.2.1 TR 7.3.2.6 TR 7.3.2.10	(c)
4. Main Condenser Off-Gas Treatment System Noble Gas Activity Monitor[d] (Downstream of AOG Treatment System)	At all times	1	B	TR 7.3.2.1 TR 7.3.2.3 TR 7.3.2.6 TR 7.3.2.10	(b)

(continued)

(a) Specific instrumentation identification numbers are provided in Appendix E.

(b) Alarm/trip setpoints shall be determined in accordance with ODCM methodology and set to ensure the limits of ODCMS 7.3.7, "Dose Rate—Gaseous Effluents," are not exceeded.

(c) Alarm/trip setpoints shall be determined in accordance with associated design specification(s) and set to ensure the limits of ODCMS 7.3.7, "Dose Rate—Gaseous Effluents," are not exceeded.

(d) Provides alarm.

Table 7.3.2-1 (page 3 of 4)
Radioactive Gaseous Effluent Monitoring Instrumentation

FUNCTION[a]	APPLICABLE MODES OR OTHER SPECIFIED CONDITIONS	REQUIRED CHANNELS PER FUNCTION	CONDITIONS REFERENCED FROM REQUIRED COMPENSATORY MEASURES A.1	TEST REQUIREMENTS	ALARM/ TRIP SETPOINT VALUE
5. Main Condenser Off-Gas Treatment System Explosive Gas Monitoring System					
a. Recombiner Train A	(e)	2	F	TR 7.3.2.1 TR 7.3.2.4 TR 7.3.2.9	(c)
b. Recombiner Train B	(e)	2	F	TR 7.3.2.1 TR 7.3.2.4 TR 7.3.2.9	(c)
6. Main Condenser Air Ejector Noble Gas Radioactivity Monitor[d] (Prior to input to Treatment System)	(f)	1	I	TR 7.3.2.1 TR 7.3.2.3 TR 7.3.2.8 TR 7.3.2.10	(b)
7. Hot Shop Ventilation Monitoring System					
a. Iodine Sampler Cartridge	At all times	1	C	TR 7.3.2.2	NA
b. Particulate Sampler Filter	At all times	1	C	TR 7.3.2.2	NA

(continued)

(a) Specific instrumentation identification numbers are provided in Appendix E.

(b) Alarm/trip setpoints shall be determined in accordance with ODCM methodology and set to ensure the limits of ODCMS 7.3.7, "Dose Rate—Gaseous Effluents," are not exceeded.

(c) Alarm/trip setpoints shall be determined in accordance with associated design specification(s) and set to ensure the limits of ODCMS 7.3.7, "Dose Rate—Gaseous Effluents," are not exceeded.

(d) Provides alarm.

(e) During associated recombiner train operation.

(f) During operation of the main condenser air ejector.

Table 7.3.2-1 (page 4 of 4)
Radioactive Gaseous Effluent Monitoring Instrumentation

FUNCTION[a]	APPLICABLE MODES OR OTHER SPECIFIED CONDITIONS	REQUIRED CHANNELS PER FUNCTION	CONDITIONS REFERENCED FROM REQUIRED COMPENSATORY MEASURES A.1	TEST REQUIREMENTS	ALARM/ TRIP SETPOINT VALUE
8. Radioactive Materials Container and Storage Building Decontamination Facility					
a. Iodine Sampler Cartridge	(g)	1	K	TR 7.3.2.1	NA
b. Particulate Sampler Filter	(g)	1	K	TR 7.3.2.1	NA(i)
9. Low Level Warehouse					
a. Particulate Sampler	(h)	1	K	TR 7.3.2.2	NA (i)

(a) Specific instrumentation identification numbers are provided in Appendix E.

(g) During operation of the Radioactive Materials Container and Storage Building Decontamination Facility.

(h) During operation of the Low Level Warehouse ventilation system.

(i) Local alarm.

7.3.3 CONCENTRATION—LIQUID EFFLUENTS

ODCMS 7.3.3 The concentration of radioactive material released to UNRESTRICTED AREAS after dilution in the discharge canal shall be limited to:

a. 10 times the concentrations specified in Appendix B, Table 2, Column 2 to 10 CFR 20.1001-20.2401 for radionuclides other than dissolved or entrained noble gases; and

b. 2×10^{-4} μCi/ml total activity concentration for all dissolved or entrained noble gases.

APPLICABILITY: At all times.

COMPENSATORY MEASURES

CONDITION	REQUIRED COMPENSATORY MEASURE	COMPLETION TIME
A. Concentration of radioactive material released to UNRESTRICTED AREAS not within limits.	A.1 Initiate action to restore concentration to within limits.	Immediately

TEST REQUIREMENTS

TEST		FREQUENCY
TR 7.3.3.1	Verify the concentration of radioactive material released to UNRESTRICTED AREAS is within limits.	In accordance with Table 7.3.3-1

(continued)

TEST REQUIREMENTS (continued)

TEST		FREQUENCY
TR 7.3.3.2	NOTE Only required to be performed if stabilization pond or service water samples analyzed in accordance with Table 7.3.3-1 indicate concentrations of any gamma-emitting radionuclides greater than the trigger level of 5×10^{-6} µCi/ml.	
	Verify concentration of radioactive material released to UNRESTRICTED AREAS is within limits.	In accordance with Table 7.3.3-2 for liquid wastes exceeding the trigger level

Table 7.3.3-1 (page 1 of 3)
Radioactive Liquid Waste Sampling and Analysis Program

	LIQUID RELEASE TYPE	SAMPLE FREQUENCY	SAMPLE ANALYSIS FREQUENCY	SAMPLE ANALYSIS TYPE	SAMPLE LOWER LIMIT OF DETECTION (LLD)[a][e]
1.	Sample Tanks, Detergent Drain Tank, and Salt Water Release Tanks (Batch Release),[h]	Prior to release of each batch	Prior to release of each batch	Principal Gamma Emitters[g]	5×10^{-7}[b] μCi/ml
				I-131	1×10^{-6} μCi/ml
	AND	Prior to release of one batch once per 31 days	31 days	Dissolved and entrained gases (Gamma Emitters)	1×10^{-5} μCi/ml
	Circulating Water Pit	Prior to release of each batch	31 days Composite[c]	Gross Alpha	1×10^{-7} μCi/ml
				H-3	1×10^{-5} μCi/ml
		Prior to release of each batch	92 days Composite[c]	Sr-89, Sr-90	5×10^{-8} μCi/ml
				Fe-55	1×10^{-6} μCi/ml
2.	Stabilization Pond [d]	Prior to each release	Prior to each release	Principal Gamma Emitters [g]	5×10^{-7}[b] μCi/ml
		AND	AND		
		24 hours during periods of release[f]	24 hours during periods of release[f]		
3.	Service Water[d] (Potential Continuous Release)	7 days during system operation	7 days during system operation	Principal Gamma Emitters [g]	5×10^{-7}[b] μCi/ml

Table 7.3.3-1 (page 2 of 3)
Radioactive Liquid Waste Sampling and Analysis Program

(a) The detectability limits for activity analyses are based on technical feasibility limits and on the potential significance in the environment of the quantities released. For some nuclides, lower detection limits may be readily achievable; and when nuclides are measured below the stated limits, they should also be reported.

(b) When operational limitations preclude specific gamma radionuclide analysis of each batch, gross radioactivity measurements shall be made to estimate the quantity and concentrations of radioactive material released in the batch; and a weekly sample composited from proportional aliquots from each batch released during the week shall be analyzed for principal gamma-emitting radionuclides.

(c) A composite sample is one in which the quantity of liquid sampled is proportional to the quantity of liquid waste discharged and in which the method of sampling employed results in a specimen that is representative of the liquids released.

(d) The stabilization pond and service water liquid release types represent potential release pathways and not actual release pathways. Test of these pathways is intended to alert the plant to a potential problem; analysis for principal gamma emitters should be sufficient to meet this intent. If analysis for principal gamma emitters indicates a problem (i.e., exceeds the trigger level of 5×10^{-6} μCi/ml), then complete sampling and analyses shall be performed as per Table 7.3.3-2.

(e) The lower limit of detectability (LLD) is the smallest concentration of a radioactive material in an unknown sample that will be detected with a 95% probability with a 5% probability of falsely concluding that a blank observation represents a "real" signal.

For a particular measurement system, which may include radiochemical separation:

$$LLD = \frac{4.66\ \sigma_b}{E \cdot V \cdot 2.22 \times 10^6 \cdot Y \cdot e^{-(\lambda_i t_e)}}$$

Where:

LLD is the "a priori" lower limit of detection as defined above (as microcuries per unit mass or volume)

σ_b = $(N/t_b)^{1/2}$

= standard deviation of background (cpm)

Table 7.3.3-1 (page 3 of 3)
Radioactive Liquid Waste Sampling and Analysis Program

N	=	background count rate (cpm)
t_b	=	time background counted for (min)
E	=	counting efficiency, as counts per disintegration
V	=	volume or mass of sample
2.22×10^6	=	conversion factor (dpm/microcurie)
Y	=	fractional radiochemical yield
λ_i	=	radioactive decay constant of ith nuclide (sec^{-1})
t_e	=	elapsed time between sample collection and counting (sec)

Typical values of E, V, Y, and t_e should be used in the calculation. It should be recognized that the LLD is defined as an "a priori" (before the fact) limit representing the capability of a measurement system and not as an "a posteriori" (after the fact) limit for a particular measurement.

(f) The stabilization pond is typically released over a several-day period. The pond is to be sampled and analyzed prior to commencing release. When composite sampling instrumentation becomes available and is OPERABLE, daily grab sampling of the stabilization pond effluent will not be required during release and the composite sample will be analyzed on a weekly basis.

(g) The principal gamma emitters for which the LLD specifications apply exclusively are the following radionuclides: Mn-54, Fe-59, Co-58, Co-60, Zn-65, Mo-99, Cs-134, Cs-137, Ce-141, and Ce-144. This list does not mean that only these nuclides are to be considered. Other gamma peaks that are identifiable, together with those of the above nuclides, shall also be analyzed and reported in the Radioactive Effluent Release Report.

(h) A batch release is the discharge of liquid wastes of a discrete volume. Prior to sampling for analyses, each batch shall be isolated and then thoroughly mixed to assure representative sampling.

Table 7.3.3-2 (page 1 of 3)
Radioactive Liquid Waste Sampling and Analysis Program
for Potential Release Pathways Which Have Exceeded Trigger Levels

LIQUID RELEASE TYPE	SAMPLE FREQUENCY	SAMPLE ANALYSIS FREQUENCY	SAMPLE ANALYSIS TYPE	SAMPLE LOWER LIMIT OF DETECTION (LLD)[a][e]
1. Stabilization Pond	Prior to each release	Prior to each release	Principal Gamma Emitters[g]	5×10^{-7}[b] μCi/ml
	AND	AND	I-131	1×10^{-6} μCi/ml
	24 hours during periods of release[f]	24 hours during periods of release[f]		
	Prior to one release once per 31 days	31 days	Dissolved and entrained gases (Gamma Emitters)	1×10^{-5} μCi/ml
	Prior to each release	31 days Composite[c]	Gross Alpha	1×10^{-7} μCi/ml
			H-3	1×10^{-5} μCi/ml
	Prior to each release	92 days Composite[c]	Sr-89, Sr-90	5×10^{-8} μCi/ml
			Fe-55	1×10^{-6} μCi/ml
2. Service Water (Continuous Release)[h]	24 hours[d]	7 days Composite[c]	Principal Gamma Emitters [g]	5×10^{-7}[b] μCi/ml
			I-131	1×10^{-6} μCi/ml
	31 days Grab Sample	31 days	Dissolved and entrained gases (Gamma Emitters)	1×10^{-5} μCi/ml
	24 hours[d]	31 days Composite[c]	Gross Alpha	1×10^{-7} μCi/ml
			H-3	1×10^{-5} μCi/ml
	24 hours[d]	92 days Composite[c]	Sr-89, Sr-90	5×10^{-8} μCi/ml
			Fe-55	1×10^{-6} μCi/ml

Table 7.3.3-2 (page 2 of 3)
Radioactive Liquid Waste Sampling and Analysis Program
for Potential Release Pathways Which Have Exceeded Trigger Levels

(a) The detectability limits for activity analyses are based on technical feasibility limits and on the potential significance in the environment of the quantities released. For some nuclides, lower detection limits may be readily achievable; and when nuclides are measured below the stated limits, they should also be reported.

(b) When operational limitations preclude specific gamma radionuclide analysis of each batch, gross radioactivity measurements shall be made to estimate the quantity and concentrations of radioactive material released in the batch; and a weekly sample composited from proportional aliquots from each batch released during the week shall be analyzed for principal gamma-emitting radionuclides.

(c) A composite sample is one in which the quantity of liquid sampled is proportional to the quantity of liquid waste discharged and in which the method of sampling employed results in a specimen that is representative of the liquids released.

(d) Until such time as continuous proportional composite samplers are installed on the service water discharge line, daily grab sampling of the service water effluent will be required for use in making up the composite.

(e) The lower limit of detectability (LLD) is the smallest concentration of a radioactive material in an unknown sample that will be detected with a 95% probability with a 5% probability of falsely concluding that a blank observation represents a "real" signal.

For a particular measurement system, which may include radiochemical separation:

$$LLD = \frac{4.66\ \sigma_b}{E \cdot V \cdot 2.22 \times 10^6 \cdot Y \cdot e^{-(\lambda_i t_e)}}$$

Where:

LLD is the "<u>a priori</u>" lower limit of detection as defined above (as microcuries per unit mass or volume)

σ_b = $(N/t_b)^{1/2}$

= standard deviation of background (cpm)

N = background count rate (cpm)

Table 7.3.3-2 (page 3 of 3)
Radioactive Liquid Waste Sampling and Analysis Program
for Potential Release Pathways Which Have Exceeded Trigger Levels

t_b	=	time background counted for (min)
E	=	counting efficiency, as counts per disintegration
V	=	volume or mass of sample
2.22×10^6	=	conversion factor (dpm/microcurie)
Y	=	fractional radiochemical yield
λ_i	=	radioactive decay constant of ith nuclide (sec^{-1})
t_e	=	elapsed time between sample collection and counting (sec)

Typical values of E, V, Y, and t_e should be used in the calculation. It should be recognized that the LLD is defined as an "a priori" (before the fact) limit representing the capability of a measurement system and not as an "a posteriori" (after the fact) limit for a particular measurement.

(f) The stabilization pond is typically released over a several-day period. The pond is to be sampled and analyzed prior to commencing release. When composite sampling instrumentation becomes available and is OPERABLE, daily grab sampling of the stabilization pond effluent will not be required during release and the composite sample will be analyzed on a weekly basis.

(g) The principal gamma emitters for which the LLD specifications apply exclusively are the following radionuclides: Mn-54, Fe-59, Co-58, Co-60, Zn-65, Mo-99, Cs-134, Cs-137, Ce-141, and Ce-144. This list does not mean that only these nuclides are to be considered. Other gamma peaks that are identifiable, together with those of the above nuclides, shall also be analyzed and reported in the Radioactive Effluent Release Report.

(h) A continuous release is the discharge of liquid waste of a nondiscrete volume, e.g., from a volume or a system that has an input flow during the continuous release.

7.3.4 DOSE—LIQUID EFFLUENTS

ODCMS 7.3.4 The dose or dose commitment to a MEMBER OF THE PUBLIC from radioactive materials in liquid effluents released to UNRESTRICTED AREAS shall be limited to:

a. ≤ 3 mrem to the total body and ≤ 10 mrem to any organ during any calendar quarter; and

b. ≤ 6 mrem to the total body and ≤ 20 mrem to any organ during any calendar year.

APPLICABILITY: At all times.

COMPENSATORY MEASURES

NOTE
Enter applicable Conditions and Required Compensatory Measures of ODCMS 7.3.14, "Total Dose (40 CFR 190)," when liquid effluent dose results in exceeding an annual total dose limit.

CONDITION	REQUIRED COMPENSATORY MEASURE	COMPLETION TIME
A. NOTE Required Compensatory Measure A.1 shall be completed if this Condition is entered. Calculated dose from the release of radioactive materials in liquid effluents to UNRESTRICTED AREAS not within limits.	A.1 Submit a Special Report to the NRC that identifies causes for exceeding limits, corrective actions taken to reduce releases, and corrective actions to assure that subsequent releases will be in compliance with the required limits.	30 days

TEST REQUIREMENTS

TEST		FREQUENCY
TR 7.3.4.1	Verify the cumulative dose contributions from liquid effluents for the current calendar quarter and current calendar year are within limits in accordance with the methodology and parameters in the ODCM.	31 days

7.3.5 LIQUID RADWASTE TREATMENT SYSTEM

ODCMS 7.3.5 The Liquid Radwaste Treatment System shall be used to reduce radioactive materials in liquid wastes prior to their discharge.

APPLICABILITY: During release of liquid radioactive water when the projected doses due to the liquid effluent, from the site to UNRESTRICTED AREAS, would exceed 0.12 mrem to the total body or 0.4 mrem to any organ in a 31 day period.

COMPENSATORY MEASURES

CONDITION	REQUIRED COMPENSATORY MEASURE	COMPLETION TIME
A. NOTE: Required Compensatory Measure A.1 shall be completed if this Condition is entered. Liquid waste being discharged without treatment.	A.1 Submit a Special Report to the NRC that includes explanation of why liquid radwaste was being discharged without treatment, identification of any required inoperable equipment or subsystem and the reasons for the inoperability, the corrective actions taken to restore the required inoperable equipment to OPERABLE status, and a summary description of the corrective actions taken to prevent recurrence.	30 days

TEST REQUIREMENTS

TEST		FREQUENCY
TR 7.3.5.1	Verify required valve alignments to ensure Liquid Radwaste Treatment System is in use to reduce radioactive materials in liquid waste.	Prior to release of liquid effluents
TR 7.3.5.2	Determine the projected doses due to liquid releases from the site to UNRESTRICTED AREAS in accordance with the methodology and parameters in the ODCM.	31 days

7.3.6 LIQUID HOLDUP TANKS

ODCMS 7.3.6 The quantity of radioactive material, excluding tritium and dissolved or entrained gases, suspended in solution in the condensate storage tank, auxiliary surge tank and outdoor temporary tank shall be maintained within limits.

APPLICABILITY: At all times.

COMPENSATORY MEASURES

NOTE
Separate Condition entry is allowed for each tank.

CONDITION	REQUIRED COMPENSATORY MEASURE		COMPLETION TIME
A. Quantity of radioactive material in one or more of the specified liquid holdup tanks not within limit.	A.1	Suspend addition of radioactive materials to the associated tank.	Immediately
	AND		
	A.2	Restore quantity of radioactive material in the tank to within limit.	48 hours
	AND		
	A.3	Prepare and submit in the Radioactive Effluent Release Report, a description of the events leading to the non-compliance.	Upon submittal of the current calendar year Radioactive Effluent Release Report

TEST REQUIREMENTS

	TEST	FREQUENCY
TR 7.3.6.1	NOTE Only required to be performed when radioactive materials are being added to the tank. Verify the quantity of radioactive material, excluding tritium and dissolved or entrained gases, in the condensate storage tank is ≤ 10 Ci by analyzing a representative sample of the tank's contents.	7 days
TR 7.3.6.2	NOTE Only required to be performed when radioactive materials are being added to the tank. Verify the quantity of radioactive material, excluding tritium and dissolved or entrained gases, in the auxiliary surge tank is ≤ 10 Ci by calculation using dose measurement(s) of the tank area.	7 days
TR 7.3.6.3	NOTE Only required to be performed when radioactive materials are being added to the tank. Verify the quantity of radioactive material, excluding tritium and dissolved or entrained gases, in the outdoor temporary tank is ≤ 10 Ci by analyzing a representative sample of the tank's contents.	7 days

7.3.7 DOSE RATE—GASEOUS EFFLUENTS

ODCMS 7.3.7 The dose rate at and beyond the SITE BOUNDARY due to radioactive materials released in gaseous effluents from the site shall be limited to the following:

a. For nobles gases, ≤ 500 mrem per year to the total body and ≤ 3000 mrem per year to the skin; and

b. For iodine-131, iodine-133, tritium, and all radionuclides in particulate form with half lives > 8 days, ≤ 1500 mrem per year to any organ.

APPLICABILITY: At all times.

COMPENSATORY MEASURES

CONDITION	REQUIRED COMPENSATORY MEASURE	COMPLETION TIME
A. Dose rate from the release of radioactive materials in gaseous effluents from the site at or beyond the SITE BOUNDARY not within limits.	A.1 Initiate action to restore dose rate to within limits.	Immediately

TEST REQUIREMENTS

TEST		FREQUENCY
TR 7.3.7.1	Verify the dose rate due to noble gases in gaseous effluents is within limits in accordance with methodology and parameters in the ODCM.	In accordance with the ODCM
TR 7.3.7.2	Verify dose rate due to iodine-131, iodine-133, tritium, and all radionuclides in particulate form with half lives > 8 days in gaseous effluents is within limits in accordance with the methodology and parameters in the ODCM.	In accordance with Table 7.3.7-1

Table 7.3.7-1 (page 1 of 4)
Radioactive Gaseous Waste Sampling and Analysis Program

GASEOUS RELEASE TYPE	SAMPLE FREQUENCY	SAMPLE ANALYSIS FREQUENCY	SAMPLE ANALYSIS TYPE	SAMPLE LOWER LIMIT OF DETECTION (LLD)[a]
1. Drywell Purge	Prior to each purge Grab Sample	Prior to each purge	Principal Gamma Emitters[b]	1×10^{-4} µCi/ml
2. Environmental Release Points a. Continuous Release: Main Stack Reactor Building Vents 'Turbine Building Vents Hot Shop[h] Building Vents	31 days Grab Sample	31 days	Principal Gamma Emitters[b] [c]	1×10^{-4} µCi/ml
			H-3[d]	1×10^{-6} µCi/ml
	Continuous[e]	7 days[f][g] Charcoal Sample	I-131	1×10^{-12} µCi/ml
	Continuous[e]	7 days[f][g] Particulate Sample	Principal Gamma Emitters[b] (I-131, others)	1×10^{-11} µCi/ml
	Continuous[e]	31 days Composite Particulate Sample	Gross Alpha	1×10^{-11} µCi/ml
	Continuous[e]	92 days Composite Particulate Sample	Sr-89, Sr-90	1×10^{-11} µCi/ml
	Continuous[e	Noble Gas Monitor	Noble Gases, Gross Beta or Gamma	1×10^{-6} µCi/ml
b. Batch Release: Radioactive Materials Container and Storage Building Decontamination Facility (RMCSB) Low Level Warehouse	During RMCSB[e] operation only	Each batch release: Charcoal Sample	I-131	1×10^{-12} µCi/ml
	During facility[e] operation	Each batch release: Particulate Sample	Principle Gamma Emitters[b] (I-131, others)	1×10^{-11} µCi/ml
	During facility[e] operation	31 days Composite Particulate Sample	Gross Alpha	1×10^{-11} µCi/ml
	During facility[e] operation	92 days Composite Particulate Sample	Sr-89, Sr-90	1×10^{-11} µCi/ml
3. Incinerated Oil[i]	Prior to each[j] batch release Grab Sample	Prior to each batch release[j]	Principal Gamma Emitters[b]	5×10^{-7} µCi/ml

Table 7.3.7-1 (page 2 of 4)
Radioactive Gaseous Waste Sampling and Analysis Program

(a) The lower limit of detectability (LLD) is the smallest concentration of a radioactive material in an unknown sample that will be detected with a 95% probability with a 5% probability of falsely concluding that a blank observation represents a "real" signal.

For a particular measurement system, which may include radiochemical separation:

$$LLD = \frac{4.66\ \sigma_b}{E \cdot V \cdot 2.22 \times 10^6 \cdot Y \cdot e^{-(\lambda_i t_e)}}$$

Where:

LLD is the "a priori" lower limit of detection as defined above (as microcuries per unit mass or volume)

σ_b	=	$(N/t_b)^{1/2}$
	=	standard deviation of background (cpm)
N	=	background count rate (cpm)
t_b	=	time background counted for (min)
E	=	counting efficiency, as counts per disintegration
V	=	volume or mass of sample
2.22×10^6	=	conversion factor (dpm/microcurie)
Y	=	fractional radiochemical yield
λ_i	=	radioactive decay constant of ith nuclide (sec^{-1})
t_e	=	elapsed time between sample collection and counting (sec)

Typical values of E, V, Y, and t_e should be used in the calculation. It should be recognized that the LLD is defined as an "a priori" (before the fact) limit representing the capability of a measurement system and not as an "a posteriori" (after the fact) limit for a particular measurement.

Table 7.3.7-1 (page 3 of 4)
Radioactive Gaseous Waste Sampling and Analysis Program

(b) The principal gamma emitters for which the LLD specification applies exclusively are the following radionuclides: Kr-87, Kr-88, Xe-133, Xe-133m, Xe-135, and Xe-138 for gaseous emissions and Mn-54, Fe-59, Co-58, Co-60, Zn-65, Mo-99, Cs-134, Cs-137, Ce-141, and Ce-144 for particulate emissions. This list does not mean that only these nuclides are to be considered. Other gamma peaks that are identifiable, together with those of the above nuclides, shall also be analyzed and reported in the Radioactive Effluent Release Report.

(c) With a THERMAL POWER change exceeding 15 percent of RATED THERMAL POWER within one hour, or following shutdown or start-up, sampling and analyses shall also be performed unless (1) analysis shows that the Dose Equivalent I-131 concentration in the primary coolant has not increased more than a factor of 3; and (2) the applicable noble gas activity monitor shows that effluent activity has not increased by more than a factor of 3.

(d) If during refueling, the tritium concentration in the spent fuel pool water exceeds 2×10^{-4} µCi/ml, tritium grab samples shall be taken at least once per 7 days from the ventilation exhaust from the spent fuel pool area whenever spent fuel is in the spent fuel pool. Spent fuel pool water will be sampled at least once per 7 days during refueling.

(e) The ratio of the sample flow rate to the sampled stream flow rate shall be known for the time period covered by each dose or dose rate calculation made in accordance with ODCMS 7.3.7, 7.3.8, and 7.3.9.

(f) Sample cartridges/filters shall be changed at least once per 7 days and analyses shall be completed within 48 hours after changing (or after removal from sampler).

(g) Sampling shall be performed at least once per 24 hours for at least 7 days following each shutdown, start-up, or THERMAL POWER change exceeding 15 percent of RATED THERMAL POWER in 1 hour, and analyses shall be completed within 48 hours of changing. When samples collected for 24 hours are analyzed, the corresponding LLDs may be increased by a factor of 10. This requirement does not apply if (1) analysis shows that the Dose Equivalent I-131 concentration in the primary coolant has not increased more than a factor of 3; and (2) the applicable noble gas monitor shows that effluent activity has not increased more than a factor of 3. This footnote does not apply to the Hot Shop environmental release point.

(h) Monthly grab samples to be analyzed for principal gamma emitters and tritium are not applicable for the Hot Shop environmental release point. In addition, the Hot Shop release point does not have a noble gas monitor and, therefore, the noble gas activity analysis requirements of Table 7.3.7-1 are not applicable.

Table 7.3.7-1 (page 4 of 4)
Radioactive Gaseous Waste Sampling and Analysis Program

(i) Releases from incinerated oil may be discharged via points other than the main vent (e.g., incinerator). Release shall be accounted for based on pre-release grab sample data.

(j) Samples of waste oil to be incinerated shall be collected from and be representative of oil in liquid form.

7.3.8 DOSE—NOBLE GASES

ODCMS 7.3.8 The air dose at and beyond the SITE BOUNDARY due to noble gases in gaseous effluents from the site shall be limited to the following:

a. ≤ 10 mrads gamma radiation and ≤ 20 mrads beta radiation during any calendar quarter; and

b. ≤ 20 mrads gamma radiation and ≤ 40 mrads beta radiation during any calendar year.

APPLICABILITY: At all times.

COMPENSATORY MEASURES

NOTE
Enter applicable Conditions and Required Compensatory Measures of ODCMS 7.3.14, "Total Dose (40 CFR 190)," when gaseous effluent (noble gases) dose results in exceeding an annual total dose limit.

CONDITION	REQUIRED COMPENSATORY MEASURE	COMPLETION TIME
A. NOTE Required Compensatory Measure A.1 shall be completed if this Condition is entered. Calculated air dose from radioactive noble gases in gaseous effluents at or beyond the SITE BOUNDARY not within limits.	A.1 Submit a Special Report to the NRC that identifies causes for exceeding the limits, corrective actions taken to reduce releases, and corrective actions to assure that subsequent releases are within limits.	30 days

TEST REQUIREMENTS

TEST		FREQUENCY
TR 7.3.8.1	Verify the cumulative dose contributions from noble gases in gaseous effluents for the current calendar quarter and current calendar year are within limits in accordance with the methodology and parameters in the ODCM.	31 days

7.3.9 DOSE—I-131, I-133, TRITIUM, AND RADIONUCLIDES IN PARTICULATE FORM

ODCMS 7.3.9 The dose to a MEMBER OF THE PUBLIC at and beyond the SITE BOUNDARY from iodine-131, iodine-133, tritium, and all radionuclides in particulate form with half lives > 8 days, in gaseous effluents released from the site shall be limited to the following:

a. ≤ 15 mrems to any organ during any calendar quarter;

b. ≤ 30 mrems to any organ during any calendar year; and

c. < 0.1% of the limits of ODCMS 7.3.9.a and ODCMS 7.3.9.b as a result of burning contaminated oil.

APPLICABILITY: At all times.

COMPENSATORY MEASURES

NOTE
Enter applicable Conditions and Required Compensatory Measures of ODCMS 7.3.14, "Total Dose (40 CFR 190)," when gaseous effluent (I-131, I-133, tritium, radionuclides in particulate form) dose results in exceeding an annual total dose limit.

CONDITION	REQUIRED COMPENSATORY MEASURE	COMPLETION TIME
A. NOTE: Required Compensatory Measure A.1 shall be completed if this Condition is entered. Calculated dose from the release of iodine-131, iodine-133, tritium, and radionuclides in particulate form with half-lives > 8 days, in gaseous effluents at or beyond the SITE BOUNDARY not within limits.	A.1 Submit a Special Report to the NRC that identifies causes for exceeding the limits, corrective actions taken to reduce releases, and corrective actions to assure subsequent releases are within limits.	30 days

TEST REQUIREMENTS

TEST		FREQUENCY
TR 7.3.9.1	Verify the cumulative dose contributions from iodine-131, iodine-133, tritium, and radionuclides in particulate form with half lives > 8 days, in gaseous effluents for the current calendar quarter and current calendar year are within limits in accordance with the methodology and parameters in the ODCM.	31 days

7.3.10 GASEOUS RADWASTE TREATMENT SYSTEM

ODCMS 7.3.10 The GASEOUS RADWASTE TREATMENT SYSTEM shall be in operation.

APPLICABILITY: Whenever the Main Condenser Air Ejector (evacuation) System is in operation.

COMPENSATORY MEASURES

CONDITION	REQUIRED COMPENSATORY MEASURE	COMPLETION TIME
A. GASEOUS RADWASTE TREATMENT SYSTEM not in operation.	A.1 Place GASEOUS RADWASTE TREATMENT SYSTEM in operation.	7 days
B. NOTE Required Compensatory Measure B.1 shall be completed if this Condition is entered. Required Compensatory measure and associated Completion Time not met.	B.1 Submit a Special Report to the NRC that identifies the required inoperable equipment and the reasons for the inoperability, corrective actions taken to restore the required inoperable equipment to OPERABLE status, and a summary description of the corrective actions taken to prevent recurrence.	30 days

TEST REQUIREMENTS

TEST		FREQUENCY
TR 7.3.10.1	Verify GASEOUS RADWASTE TREATMENT SYSTEM in operation by checking the readings of the relevant instruments.	12 hours

7.3.11 VENTILATION EXHAUST TREATMENT SYSTEM

ODCMS 7.3.11 The VENTILATION EXHAUST TREATMENT SYSTEM shall be used to reduce radioactive materials in gaseous waste prior to their discharge.

APPLICABILITY: During release of gaseous radioactive wastes when the projected doses due to gaseous effluent, from the site to areas at or beyond the SITE BOUNDARY, when averaged over 31 days, would exceed 0.6 mrem to any organ in a 31 day period.

COMPENSATORY MEASURES

CONDITION	REQUIRED COMPENSATORY MEASURE	COMPLETION TIME
A. NOTE: Required Compensatory Measure A.1 shall be completed if this Condition is entered. Gaseous waste being discharged without treatment.	A.1 Submit a Special Report to the NRC that identifies the inoperable equipment or subsystems and the reason for inoperability, the corrective actions taken to restore the inoperable equipment to OPERABLE status, and a summary description of the corrective actions taken to prevent recurrence.	30 days

TEST REQUIREMENTS

TEST		FREQUENCY
TR 7.3.11.1	Verify required valve alignment to ensure VENTILATION EXHAUST TREATMENT SYSTEM is in use to reduce radioactive materials in gaseous waste.	Prior to release of gaseous effluents

(continued)

TEST REQUIREMENTS (continued)

TEST		FREQUENCY
TR 7.3.11.2	NOTE Only required to be performed when the VENTILATION EXHAUST TREATMENT SYSTEM is not in use.	
	Determine the projected doses due to gaseous releases from the site to areas at or beyond the SITE BOUNDARY in accordance with the methodology and parameters in the ODCM.	31 days

7.3.12 EXPLOSIVE GAS MIXTURE

ODCMS 7.3.12 The concentration of hydrogen in the Main Condenser Offgas Treatment System shall be ≤ 4% by volume.

APPLICABILITY: When the Main Condenser Air Ejector System is in operation.

COMPENSATORY MEASURES

NOTE
ODCMS 3.0.4 is not applicable.

CONDITION	REQUIRED COMPENSATORY MEASURE	COMPLETION TIME
A. Hydrogen concentration in the Main Condenser Offgas Treatment System > 4% by volume.	A.1 Restore hydrogen concentration to within limit.	48 hours

TEST REQUIREMENTS

TEST		FREQUENCY
TR 7.3.12.1	Verify the concentration of hydrogen in the Main Condenser Offgas Treatment System is ≤ 4% by volume by monitoring waste gases with the required hydrogen monitors of ODCMS 7.3.2, "Radioactive Gaseous Effluent Monitoring Instrumentation."	Continuously

7.3.13 DRYWELL VENTING OR PURGING

ODCMS 7.3.13 The drywell shall be purged to the environment at a rate in conformance with ODCMS 7.3.7, "Dose Rate—Gaseous Effluents."

APPLICABILITY: When the drywell is being vented or purged.

COMPENSATORY MEASURES

CONDITION	REQUIRED COMPENSATORY MEASURE	COMPLETION TIME
A. Requirements of ODCMS not met.	A.1 Suspend VENTING and PURGING of the drywell.	Immediately

TEST REQUIREMENTS

TEST		FREQUENCY
TR 7.3.13.1	Perform a sample analysis in accordance with Table 7.3.7-1.	Prior to each drywell PURGE

7.3.14 TOTAL DOSE (40 CFR PART 190)

ODCMS 7.3.14 The dose or dose commitment to any MEMBER OF THE PUBLIC over the calendar year due to releases of radioactivity and radiation from uranium fuel cycle sources shall be limited to:

a. ≤ 25 mrems to the total body or any organ (except the thyroid); and

b. ≤ 75 mrem to the thyroid.

APPLICABILITY: At all times.

COMPENSATORY MEASURES

CONDITION	REQUIRED COMPENSATORY MEASURE	COMPLETION TIME
A. NOTE Required Compensatory Measures A.1 and A.2 shall be completed if this Condition is entered. Calculated dose for uranium fuel cycle sources to any MEMBER OF THE PUBLIC not within limits.	A.1 NOTE Estimates of radiation exposure from uranium fuel cycle sources shall include the effects of all effluent pathways and direct radiation, including releases covered by this Special Report. Submit a Special Report to the NRC that includes corrective actions taken to prevent recurrence, the schedule for achieving conformance with required limits, an analysis that estimates the radiation exposure to a MEMBER OF THE PUBLIC from uranium fuel cycle sources for the calendar year, descriptions of the levels of radiation and concentrations of radioactive material involved, and the cause of the exposure levels or concentrations.	30 days
	AND	(continued)

COMPENSATORY MEASURES (continued)

CONDITION	REQUIRED COMPENSATORY MEASURE	COMPLETION TIME
A. (continued)	A.2 NOTES 1. Only applicable if the release condition resulting in violation of 40 CFR 190 has not been corrected. 2. Special Report submitted is considered a timely request and a variance is granted until NRC action on the request is complete. Submit a request for a variance in accordance with 40 CFR 190 in the Special Report to the NRC.	30 days

TEST REQUIREMENTS

TEST		FREQUENCY
TR 7.3.14.1	Determine cumulative dose contributions from liquid and gaseous effluents in accordance with TR 7.3.4.1, TR 7.3.8.1 and TR 7.3.9.1, and the methodology and parameters in the ODCM.	In accordance with ODCM

(continued)

TEST REQUIREMENTS (continued)

TEST		FREQUENCY
TR 7.3.14.2	NOTE Only required to be performed when calculated doses from the release of radioactive materials in liquid or gaseous effluents exceed twice the limits of ODCMSs 7.3.4.a, 7.3.4.b, 7.3.8.a, 7.3.8.b, 7.3.9.a., or 7.3.9.b.	
	Determine cumulative dose contributions from direct radiation from the reactor units and from radwaste storage tanks in accordance with methodology and parameters in the ODCM.	In accordance with ODCM

7.3.15 RADIOLOGICAL ENVIRONMENTAL MONITORING PROGRAM

ODCMS 7.3.15 The Radiological Monitoring Program shall be as follows:

a. Radiological environmental monitoring samples shall be collected at locations and analyzed as specified in Table 7.3.15-1.

b. Each sample location specified in Table 7.3.15-1 shall contain required milk or leafy vegetable samples

c. The level of radioactivity as the result of plant effluents for each radionuclide in each environmental sampling medium at a required location shall be less than the limits specified in Table 7.3.15-2, when averaged over the calendar quarter;

d. The total level of radioactivity as the result of plant effluents in each environmental sampling medium at a required location shall be less than the limit specified in Table 7.3.15-2, when averaged over the calendar quarter; and

e. The potential annual dose to a MEMBER OF THE PUBLIC from all radionuclides other than those in Table 7.3.15-2 in each environmental sampling medium at a required location shall be less than the calendar year limits of ODCMS 7.3.4, ODCMS 7.3.8, and ODCMS 7.3.9.

APPLICABILITY: At all times.

COMPENSATORY MEASURES

CONDITION	REQUIRED COMPENSATORY MEASURE	COMPLETION TIME
A. NOTE Required Compensatory Measure A.1 shall be completed if this Condition is entered. One or more samples not collected or analyzed as specified in Table 7.3.15-1.	A.1 Prepare and submit, in the Annual Radiological Environmental Operating Report, a description for not conducting the Radiological Environmental Monitoring sampling and analysis requirements as required and the corrective actions to prevent recurrence.	Upon submittal of current calendar year Annual Radiological Environmental Operating Report

(continued)

COMPENSATORY MEASURES (continued)

CONDITION	REQUIRED COMPENSATORY MEASURE		COMPLETION TIME
B. NOTES 1. Separate Condition entry is allowed for each sample location. 2. Required Compensatory Measure B.2 shall be completed if this Condition is entered.	B.1	Identify locations for obtaining replacement samples and replace, in the Radiological Environmental Monitoring Program, the location(s) from which samples are unavailable with the new location(s).	30 days
	AND		
One or more sample locations required by Table 7.3.15-1 with required milk or fresh leafy vegetable samples unavailable.	B.2	Prepare and submit, in the Radioactive Effluent Release Report, the cause of the unavailability of samples, the new locations for obtaining replacement samples, and the revised figure(s) and table for the ODCM reflecting the new locations.	Upon submittal of current calendar year Radioactive Effluent Release Report

(continued)

COMPENSATORY MEASURES (continued)

CONDITION	REQUIRED COMPENSATORY MEASURE	COMPLETION TIME
C. NOTES 1. Separate Condition entry is allowed for each sample location. 2. Required Compensatory Measure C.1 shall be completed if this Condition is entered. One or more sample locations with the level of radioactivity for one or more radionuclides as the result of plant effluents in an environmental sampling medium not within the limits of Table 7.3.15-2 when averaged over the calendar quarter. OR One or more sample locations with the total level of radioactivity as a result of plant effluents in an environmental sampling medium not within the limits of Table 7.3.15-2 when averaged over the calendar quarter.	C.1 Submit a Special Report to the NRC which includes the cause(s) for exceeding the limit(s) and the corrective actions to reduce radioactive effluents so that the potential annual dose to a MEMBER OF THE PUBLIC is less than the calendar year reporting limits of ODCMS 7.3.4, ODCMS 7.3.8, and ODCMS 7.3.9.	30 days

(continued)

COMPENSATORY MEASURES (continued)

CONDITION	REQUIRED COMPENSATORY MEASURE	COMPLETION TIME
D. NOTES 1. Separate Condition entry is allowed for each sample location. 2. Required Compensatory Measures D.1 and D.2 shall be completed if this Condition is entered. One or more sample locations with the potential annual dose to a MEMBER OF THE PUBLIC from all radionuclides other than those in Table 7.3.15-2 not within limits.	D.1 NOTE Only required if the radionuclides are the result of plant effluents. Submit a Special Report to the NRC which includes the methodology and parameters used for estimating the potential annual dose, the cause(s) for exceeding the limit(s) and the corrective actions to reduce radioactive effluents so that the potential annual dose to a MEMBER OF THE PUBLIC is less than the calendar year limits of ODCMS 7.3.4, ODCMS 7.3.8, and ODCMS 7.3.9.	30 days
	AND	
	D.2 NOTE Only required if the radionuclides are not the result of plant effluents. Describe the condition in the Annual Radiological Environmental Operating Report.	Upon submittal of the current calendar year Annual Radiological Environmental Operating Report

TEST REQUIREMENTS

TEST		FREQUENCY
TR 7.3.15.1	Verify radiological environmental monitoring samples collected at the locations given in the table and figure(s) in the ODCM and analyzed as specified in Table 7.3.15-1 are within limits. Detection capabilities for the analyses are specified in Table 7.3.15-3.	In accordance with Table 7.3.15-1

Table 7.3.15-1 (page 1 of 5)
Radiological Environmental Monitoring Program

EXPOSURE PATHWAY AND/OR SAMPLE	NUMBER OF SAMPLES AND SAMPLE LOCATIONS[a]	SAMPLING AND COLLECTION FREQUENCY	TYPE AND FREQUENCY OF ANALYSIS
1. Direct Radiation (b)	Forty locations, either with two or more dosimeters or with one or more instruments for measuring and recording dose rate continuously to be placed as follows: An inner ring of stations, one in each meteorological sector in the general area of the SITE BOUNDARY as is reasonably accessible and practical. An outer ring of stations, one in each of the meteorological sectors at distances of 8 km or greater from the site as is reasonably accessible and practical. The balance of the stations to be placed in special interest areas such as population centers, nearby residences, schools, and one or two areas to serve as control stations.	92 days	Gamma dose: 92 days
2. Airborne-Radioiodine and Particulate	Samples from the following five locations: Three samples from different sectors as close to the SITE BOUNDARY as is reasonably accessible, one of which being at the highest calculated annual average ground level D/Q. One sample from the vicinity of a nearby community. One sample from a control location, as for example greater than 15 km distant and in a less prevalent wind direction[c].	Continuous sampler operation Sample collection: 7 days or as required by dust loading, whichever is more frequent.	I-131 analysis of radioiodine canisters: 7 days AND Gross beta radioactivity analysis of particulate sampler: following filter change[d] AND Gamma isotopic analysis[e] of composite (by location): 92 days

(continued)

Table 7.3.15-1 (page 2 of 5)
Radiological Environmental Monitoring Program

EXPOSURE PATHWAY AND/OR SAMPLE	NUMBER OF SAMPLES AND SAMPLE LOCATIONS[a]	SAMPLING AND COLLECTION FREQUENCY	TYPE AND FREQUENCY OF ANALYSIS
3. Waterborne			
a. Surface[f]	Two locations: One sample upstream. One sample downstream.	Composite[g] sample collection: 31 days	Gamma isotopic analysis[e]: 31 days AND Tritium analysis: 92 days
b. Sediment from Shoreline	One sample from downstream area with existing or potential recreational value.	184 days	Gamma isotopic analysis[e]: 184 days
4. Ingestion			
a. Milk	Samples from the following four locations: One sample from milking animals in each of three locations within 8 km of the site having the highest dose potential (when available).[h] One sample from milking animals at a control location greater than 15 km distance from the site and in a less prevalent wind direction.	With animals on pasture: 14 days At other times: 31 days	Gamma isotopic[e] and I-131 analyses: 14 days when animals are on pasture AND Gamma isotopic[e] and I-131 analyses: 31 days at other times

(continued)

Table 7.3.15-1 (page 3 of 5)
Radiological Environmental Monitoring Program

EXPOSURE PATHWAY AND/OR SAMPLE	NUMBER OF SAMPLES AND SAMPLE LOCATIONS[a]	SAMPLING AND COLLECTION FREQUENCY	TYPE AND FREQUENCY OF ANALYSIS
4. (continued)			
b. Fish and Invertebrates	Four samples from the following locations: One sample of each of three recreationally important species in vicinity of plant discharge area (one free swimming species, one bottom feeding species, and one shellfish species). One sample of a similarly edible species from an area not influenced by plant discharge to serve as a control sample.	When in season: 184 days	Gamma isotopic analysis[e] on edible portion: 184 days
c. Broadleaf Vegetation	Samples from the following three locations: Samples of broadleaf vegetation grown in two sectors of historically high D/Q values at the SITE BOUNDARY if milk sampling is not performed. One sample of similar broadleaf vegetation grown at a distance of greater than 15 km from the site in a less prevalent wind direction if milk sampling is not performed.	When available: 31 days	Gamma isotopic[e] and I-131 analyses: 31 days when available

Table 7.3.15-1 (page 4 of 5)
Radiological Environmental Monitoring Program

(a) Specific parameters of distance and direction sector from the site, and additional description where pertinent, shall be provided for each and every sample location in Table 7.3.15-1 in a table and figure(s) in the ODCM. Deviations are permitted from the required sampling schedule if specimens are unobtainable due to hazardous conditions, seasonal unavailability, malfunction of automatic sampling equipment, and other legitimate reasons. If specimens are unobtainable due to sampling equipment malfunction, every effort shall be made to complete corrective action prior to the end of the next sampling period. All deviations from the sampling schedule shall be documented in the Annual Radiological Environmental Operating Report. It is recognized that, at times, it may not be possible or practicable to continue to obtain samples of the media of choice at the most desired location or time. In these instances suitable alternative media and locations may be chosen for the particular pathway in question and appropriate substitutions made within 30 days in the radiological environmental monitoring program. Identify the cause of the unavailability of samples for that pathway and identify the new location(s) for obtaining replacement samples in the next Radioactive Effluent Release Report and also include in the report a revised figure(s) and table for the ODCM reflecting the new location(s).

(b) One or more instruments, such as a pressurized ion chamber, for measuring and recording dose rate continuously may be used in place of, or in addition to, integrating dosimeters. Film badges shall not be used as dosimeters for measuring direct radiation. The frequency of analysis or readout for TLD systems will depend upon the characteristics of the specific system used and should be selected to obtain optimum dose information with minimal fading.

(c) The purpose of this sample is to obtain background information. If it is not practical to establish control locations in accordance with the distance and wind direction criteria, other sites that provide valid background data may be substituted.

(d) Airborne particulate sample filters shall be analyzed for gross beta radioactivity 24 hours or more after sampling to allow for radon and thoron daughter decay. If gross beta activity in air particulate samples is greater than ten times the yearly mean of control samples, gamma isotopic analysis shall be performed on the individual samples.

(e) Gamma isotopic analysis means the identification and quantification of gamma-emitting radionuclides that may be attributable to the effluents from the facility.

Table 7.3.15-1 (page 5 of 5)
Radiological Environmental Monitoring Program

(f) The "upstream" sample shall be taken at a distance beyond significant influence of the discharge. The "downstream" sample shall be taken in an area beyond but near the mixing zone. "Upstream" samples in an estuary must be taken far enough upstream to be beyond the plant influence. Salt water shall be sampled only when the receiving water is utilized for recreational activities.

(g) A composite sample is one in which the quantity (aliquot) of liquid sampled is proportional to the quantity of flowing liquid and in which the method of sampling employed results in a specimen that is representative of the liquid flow. Composite samples shall be collected with equipment that is capable of collecting an aliquot at time intervals that are short (e.g., once per 6 hours) relative to compositing period (e.g., monthly) in order to assure obtaining a representative sample.

(h) When less than three (3) milking animal locations are available for testing within an 8-km distance, sampling of broadleaf vegetation shall be performed as indicated in Table 7.3.15-1, 4.c, in lieu of milk sampling.

Table 7.3.15-2 (page 1 of 1)
Limits for the Level of Radioactivity in Environmental Samples[a]

ANALYSIS	WATER (pCi/l)	AIRBORNE PARTICULATE AND GASES (pCi/m^3)	FISH (pCi/kg, wet)	MILK (pCi/l)	BROADLEAF VEGETATION (pCi/kg)
H-3	30,000				
Mn-54	1,000		30,000		
Fe-59	400		10,000		
Co-58	400		30,000		
Co-60	300		10,000		
Zn-65	300		20,000		
Zr-Nb-95	400				
I-131	2	0.9		3	100
Cs-134	30	10	1,000	60	1,000
Cs-137	50	20	2,000	70	2,000
Ba-La-140	200			300	

(a) The Limits are for samples that have only one radionuclide detected. When a sample contains more than one radionuclide, the total level of radioactivity limit is

$$\frac{\text{concentration}(1)}{\text{limit}(1)} + \frac{\text{concentration}(2)}{\text{limit}(2)} + \ldots < 1.0.$$

Table 7.3.15-3 (page 1 of 3)
Detection Capabilities for Environmental Sample Analysis[a]

Lower Limit of detection (LLD)[b]

ANALYSIS	WATER (pCi/l)	AIRBORNE PARTICULATE OR GASES (pCi/m^3)	FISH (pCi/Kg, wet)	MILK (pCi/l)	BROADLEAF VEGETATION (pCi/kg, wet)	SEDIMENT (pCi/kg, dry)
Gross Beta	4	0.01				
H-3	3,000					
Mn-54	15		130			
Fe-59	30		260			
Co-58, 60	15		130			
Zn-65	30		260			
Zr-Nb-95	15					
I-131	1[c]	0.07		1	60	
Cs-134	15	0.05	130	15	60	150
Cs-137	18	0.06	150	18	80	180
Ba-La-140	15			15		

Table 7.3.15-3 (page 2 of 3)
Detection Capabilities for Environmental Sample Analysis

(a) This list does not mean that only these nuclides are to be considered. Other peaks that are identifiable, together with those of the above nuclides, shall be analyzed and reported in the Annual Radiological Environmental Operating Report.

(b) The LLD is defined for purposes of the specifications, as the smallest concentration of radioactive material in an unknown sample that will be detected with 95% probability with a 5% probability of falsely concluding that a blank observation represents a "real" signal.

For a particular measurement system, which may include radiochemical separation:

$$LLD = \frac{4.66\,\sigma_b}{E \cdot V \cdot 2.22 \cdot Y \cdot e^{-(\lambda_i t_e)}}$$

Where:

LLD is the "a priori" lower limit of detection as defined above, as picocuries per unit mass or volume.

σ_b	=	$(N/t_b)^{1/2}$
	=	standard deviation of background (cpm)
N	=	background count rate (cpm)
t_b	=	time background counted for (min)
E	=	counting efficiency, as counts per disintegration
V	=	volume or mass of sample
2.22	=	conversion factor (dpm/pCi)
Y	=	fractional radiochemical yield
λ_i	=	radioactive decay constant of ith nuclide (sec^{-1})
t_e	=	elapsed time between sampling collection and counting (sec)

Table 7.3.15-3 (page 3 of 3)
Detection Capabilities for Environmental Sample Analysis

Typical values of E, V, Y, and t_e should be used in the calculation. It should be recognized that the LLD is defined as an a priori (before the fact) limit representing the capability of a measurement system and not as an a posteriori (after the fact) limit for a particular measurement. Analyses shall be performed in such a manner that the stated LLDs shall be achieved under routine conditions. Occasionally background fluctuations, unavoidable small sample sizes, the presence of interfering nuclides, or other uncontrollable circumstances may render these LLDs unachievable. In such cases, the contributing factors shall be identified and described in the Annual Radiological Environmental Operating Report.

(c) The LLD of gamma isotopic analysis may be used.

7.3.16 LAND USE CENSUS

ODCMS 7.3.16 A land use census shall be conducted and:

a. Shall identify the location of the nearest milk animal, residence, and garden of greater than $50m^2$ ($500\ ft^2$) producing broadleaf vegetation in each of the 16 meteorological sectors within a distance of 8 km (5 miles);

b. Shall identify (for elevated releases as defined in Regulator Guide 1.111, Revision 1, July 1977) the location of all milk animals and all gardens of greater than $50m^2$ producing broadleaf vegetation in each of the 16 meteorological sectors within a distance of 5 km (3 miles);

c. The calculated dose and dose commitment at each identified location shall be less than the most recent values calculated by TR 7.3.9.1; and

d. The calculated dose and dose commitment at each identified location, via the same exposure pathways, shall be ≤ 120% of the actual dose and dose commitment from the current sample location identified in Table 7.3.15-1, excluding the central station location.

NOTE

In lieu of the garden census of ODCMS 7.3.16.a, broadleaf vegetable sampling of at least 3 different kinds of vegetation may be performed at the SITE BOUNDARY in each of 2 different direction sectors with the highest D/Qs. Specifications for broadleaf vegetation sampling of Table 7.3.15-1 (item 4.c) shall be followed, including analysis of control samples.

APPLICABILITY: At all times.

COMPENSATORY MEASURES

CONDITION	REQUIRED COMPENSATORY MEASURE	COMPLETION TIME
A. NOTE Required Compensatory Measure A.1 shall be completed if this Condition is entered. Land use census not conducted. OR All required locations not identified.	A.1 Prepare and submit, in the Annual Radiological Environmental Operating Report, a description for not conducting the land use census and the corrective actions to prevent recurrence.	Upon submittal of current calendar year Annual Radiological Environmental Operating Report
B. NOTE Required Compensatory Measure B.1 shall be completed if this Condition is entered. One or more identified locations with the calculated dose or dose commitment greater than the values calculated by TR 7.3.9.1.	B.1 Identify new location(s) in the Radioactive Effluent Release Report.	Upon submittal of the current calendar year Radioactive Effluent Release Report

(continued)

COMPENSATORY MEASURES (continued)

CONDITION	REQUIRED COMPENSATORY MEASURE		COMPLETION TIME
C. NOTE Required Compensatory Measure C.1 shall be completed if this Condition is entered.	C.1	Add the new location to the Radiological Environmental Monitoring Program.	30 days
	AND		
One or more identified locations with the calculated dose or dose commitment, via the same exposure pathway, > 120% of the actual dose or dose commitment from the current location identified in Table 7.3.15-1.	C.2	Delete the sampling location having the lowest calculated dose or dose commitment, via the same exposure pathway, from the Radiological Monitoring program.	After October 31 of the year in which land use census was conducted
	AND		
	C.3	Identify the new location(s) in the Radioactive Effluent Release Report, and the revised figure(s) and table for the ODCM reflecting the new location.	Upon submittal of the current calendar year Radioactive Effluent Release Report

TEST REQUIREMENTS

TEST		FREQUENCY
TR 7.3.16.1	Conduct a land use census during the growing season using that information that will provide the best results, such as by a door-to-door survey, aerial survey, or by consulting local agriculture authorities; identify all required locations, and verify the calculated dose and dose commitments at each identified location is within limits.	12 months

7.3.17 INTERLABORATORY COMPARISON PROGRAM

ODCMS 7.3.17 Analyses shall be performed on radioactive materials supplied as part of an Interlaboratory Comparison Program approved by the NRC.

APPLICABILITY: At all times.

COMPENSATORY MEASURES

CONDITION	REQUIRED COMPENSATORY MEASURE	COMPLETION TIME
A. NOTE Required Compensatory Measure A.1 shall be completed if this Condition is entered. Requirements of ODCMS 7.3.17 not met.	A.1 Prepare and submit, in the Annual Radiological Environmental Operating Report, corrective actions to prevent recurrence.	Upon submittal of current calendar year Annual Radiological Environmental Operating Report

TEST REQUIREMENTS

TEST		FREQUENCY
TR 7.3.17.1	Perform the analyses required by the Interlaboratory Comparison Program.	In accordance with the ODCM

7.4.0 REPORTING REQUIREMENTS

ODCMS 7.4.1 Annual Radiological Environmental Operating Report

The Annual Radiological Environmental Operating Report shall be submitted in accordance with the requirements of Technical Specification 5.6.2. In addition to the requirements of Technical Specification 5.6.2, the Annual Radiological Environmental Operating Report shall include:

a. Summaries, interpretations, and an analysis of trends of the results of the radiological environmental surveillance activities for the report period, including a comparison with pre-operational studies, with operational controls (as appropriate), and with previous environmental surveillance reports, and an assessment of the observed impact of the plant operation on the environment;

b. Results of the land use census required by ODCMS 7.3.16;

c. A summary description of the radiological environmental monitoring program;

d. At least two legible maps of all sampling locations keyed to a table giving distances and directions from the centerline of one reactor (one map shall cover stations near the SITE BOUNDARY and the second map shall include more distant stations);

e. Results of the Interlaboratory Comparison Program required by ODCMS 7.3.17;

f. Discussion of all deviations from the sampling schedule of Table 7.3.15-1; and

g. Discussion of all analyses in which the LLD required by Table 7.3.15-3 was not achievable.

ODCMS 7.4.2 Radioactive Effluent Release Report

The Radioactive Effluent Release Report shall be submitted in accordance with the requirements of Technical Specification 5.6.3. In addition to the requirements of Technical Specification 5.6.3, the Radioactive Effluent Release Report shall include:

(continued)

7.4.0 REPORTING REQUIREMENTS (continued)

ODCMS 7.4.2 Radioactive Effluent Release Report (continued)

a. A summary of the quantities of radioactive liquid and gaseous effluents and solid waste released for the facility as outlined in Regulatory Guide 1.21, "Measuring, Evaluating, and Reporting Radioactivity in Solid Wastes and Releases of Radioactivity Materials in Liquid and Gaseous Effluents from Light-Water-Cooled Nuclear Power Plants," Revision 1, June 1974, with data summarized on a quarterly basis similar to the format of Appendix B thereof.

b. Information specified below for each class of solid waste (as defined by 10 CFR Part 61, when implemented) shipped offsite during the report period:

   1. Container volume;

   2. Total curie quantity (specify whether determined by measurement or estimate);

   3. Principal radionuclides (specify whether determined by measurement or estimate);

   4. Source of waste and processing employed (e.g., dewatered spent resin, compacted dry waste, evaporator bottoms);

   5. Type of container (e.g., LSA, Type A, Type B, Large Quantity); and

   6. Solidification agent or absorbent (e.g., cement, urea formaldehyde).

c. A list and description of unplanned releases from the site to the UNRESTRICTED AREAS of radioactive materials in gaseous and liquid effluents made during the reporting period.

d. Any changes made during the reporting period to the Process Control Program (PCP) or the Offsite Dose Calculation Manual (ODCM), as well as a listing of new locations for dose calculations and/or environmental monitoring identified by the land use census pursuant to ODCMS 7.3.16.

(continued)

7.4.0 REPORTING REQUIREMENTS (continued)

ODCMS 7.4.2 Radioactive Effluent Release Report (continued)

e. A summary of radioactivity released from the site by incineration of radioactive waste oil.

f. An annual summary of hourly meteorological data collected over the previous calendar year. This annual summary may be either in the form of an hour-by-hour listing on magnetic tape of wind speed, wind direction, atmospheric stability, and precipitation (if measured), or in the form of joint frequency distributions of wind speed, wind direction, and atmospheric stability. In lieu of submission of this summary of required meteorological data with the Radioactive Effluent Release Report, the summary of required meteorological data may be retained in a file that shall be provided to the NRC upon request.

g. An assessment of radiation doses due to radioactive liquid and gaseous effluents released from the station during the previous calendar year.

7.5.0 MAJOR CHANGES TO RADIOACTIVE WASTE TREATMENT SYSTEMS

ODCMS 7.5.1 Licensee initiated major changes to the liquid, gaseous, and solid Radioactive Waste Treatment Systems shall be reported to the NRC as part of the Radioactive Effluent Release Report or as part of the annual UFSAR update. The discussion of each change shall contain:

a. A summary of the evaluation that led to the determination that the change could be made in accordance with 10 CFR Part 50.59;

b. Sufficient detailed information to totally support the reason for the change without benefit of additional or supplemental information;

c. A detailed description of the equipment, components, and processes involved and the interfaces with other plant systems;

d. An evaluation of the change that shows the predicted release of radioactive materials in the liquid and gaseous effluents and quantity of solid waste differ from those previously predicted in the license application and amendments thereto;

e. An evaluation of the change that shows the expected maximum exposure to an individual in the UNRESTRICTED AREA and to the general population that differ from those previously estimated in the license application and amendments thereto;

f. A comparison of the predicted releases of radioactive materials, in liquid and gaseous effluents and in solid wastes, to the actual releases for the period prior to when the changes are to be made;

g. An estimate of the exposure to plant operating personnel as a result of the change; and

h. Documentation of the fact that the change was reviewed and found acceptable by the PNSC.

ODCMS 7.5.2 The change shall become effective upon review and acceptance by the PNSC.

B 7.3.0 OFFSITE DOSE CALCULATION MANUAL SPECIFICATION (ODCMS) APPLICABILITY

BASES

ODCMSs	ODCMS 7.3.0.1 through ODCMS 7.3.0.6 establish the general requirements applicable to all Specifications and apply at all times, unless otherwise stated.
ODCMS 7.3.0.1	ODCMS 7.3.0.1 establishes the Applicability statement within each individual ODCMS as the requirement for when the ODCMS is required to be met (i.e., when the unit is in the MODES or other specified conditions of the Applicability statement of each ODCMS).
ODCMS 7.3.0.2	ODCMS 7.3.0.2 establishes that upon discovery of a failure to meet an ODCMS, the associated COMPENSATORY MEASURES shall be met. The Completion Time of each Required Compensatory Measure for a COMPENSATORY MEASURES Condition is applicable from the point in time that a COMPENSATORY MEASURES Condition is entered. The Required Compensatory Measures establish those remedial measures that must be taken within specified Completion Times when the requirements of an ODCMS are not met. This ODCMS establishes that: a. Completion of the Required Compensatory Measures within the specified Completion Times constitutes compliance with an ODCMS; and b. Completion of the Required Compensatory Measures is not required when an ODCMS is met within the specified Completion Time, unless otherwise specified. There are two basic types of Required Compensatory Measures. The first type of Required Compensatory Measure specifies a time limit in which the ODCMS must be met. This time limit is the Completion Time to restore an inoperable system or component to OPERABLE status or to restore variables to within specified limits. If this type of Required Compensatory Measure is not completed within the specified Completion Time, a shutdown may be required to place the unit in a MODE or condition in which the ODCMS is not applicable. (Whether stated as a Required Compensatory Measure or not, correction of the entered

(continued)

BASES

ODCMS 7.3.0.2 (continued)

Condition is a compensatory measure that may always be considered upon entering COMPENSATORY MEASURES.) The second type of Required Compensatory Measure specifies the remedial measures that permit continued operation of the unit that is not further restricted by the Completion Time. In this case, compliance with the Required Compensatory Measures provides an acceptable level of safety for continued operation.

Completing the Required Compensatory Measures is not required when an ODCMS is met or is no longer applicable, unless otherwise stated in the individual ODCMSs.

The nature of some Required Compensatory Measures of some Conditions necessitates that, once the Condition is entered, the Required Compensatory Measures must be completed even though the associated Condition no longer exists. The individual ODCMS's COMPENSATORY MEASURES specify the Required Compensatory Measures where this is the case.

The Completion Times of the Required Compensatory Measures are also applicable when a system or component is removed from service intentionally. The reasons for intentionally relying on the COMPENSATORY MEASURES include, but are not limited to, performance of Tests, preventive maintenance, corrective maintenance, or investigation of operational problems. Entering COMPENSATORY MEASURES for these reasons must be done in a manner that does not compromise safety. Intentional entry into COMPENSATORY MEASURES should not be made for operational convenience. Alternatives that would not result in redundant equipment being inoperable should be used instead. Doing so limits the time both subsystems/ divisions of a safety function are inoperable. Individual ODCMSs may specify a time limit for performing a TR when equipment is removed from service or bypassed for testing. In this case, the Completion Times of the Required Compensatory Measures are applicable when this time limit expires, if the equipment remains removed from service or bypassed.

When a change in MODE or other specified condition is required to comply with Required Compensatory Measures, the unit may enter a MODE or other specified condition in which another ODCMS becomes applicable. In this case, the Completion Times of the associated

(continued)

BASES

ODCMS 7.3.0.2 (continued)

Required Compensatory Measures would apply from the point in time that the new ODCMS becomes applicable and the COMPENSATORY MEASURES Condition(s) are entered.

ODCMS 7.3.0.3

Not used.

ODCMS 7.3.0.4

ODCMS 7.3.0.4 establishes limitations on changes in MODES or other specified conditions in the Applicability when an ODCMS is not met. It precludes placing the unit in a MODE or other specified condition stated in that Applicability (e.g., Applicability desired to be entered) when the following exist:

a. Unit conditions are such that the requirements of the ODCMS would not be met in the Applicability desired to be entered; and

b. Continued noncompliance with the ODCMS requirements, if the Applicability were entered, would result in the unit being required to exit the Applicability desired to be entered to comply with the Required Compensatory Measures.

Compliance with Required Compensatory Measures that permit continued operation of the unit for an unlimited period of time in a MODE or other specified condition provides an acceptable level of safety for continued operation. This is without regard to the status of the unit before or after the MODE change. Therefore, in such cases, entry into a MODE or other specified condition in the Applicability may be made in accordance with the provisions of the Required Compensatory Measures. The provisions of this Specification should not be interpreted as endorsing the failure to exercise the good practice of restoring systems or components to OPERABLE status before unit startup.

The provisions of ODCMS 7.3.0.4 shall not prevent changes in MODES or other specified conditions in the Applicability that are required to comply with COMPENSATORY MEASURES. In addition, the provisions of ODCMS 7.3.0.4 shall not prevent changes in MODES or other specified conditions in the Applicability that result from any unit shutdown.

(continued)

BASES

ODCMS 7.3.0.4 (continued)

Exceptions to ODCMS 7.3.0.4 are stated in the individual Tests. Exceptions may apply to all the COMPENSATORY MEASURES or to a specific Required Compensatory Measure of an ODCMS.

Tests do not have to be performed on the associated inoperable equipment (or on variables outside the specified limits), as permitted by TR 7.3.0.1. Therefore, changing MODES or other specified conditions while in a COMPENSATORY MEASURES Condition, either in compliance with ODCMS 7.3.0.4 or where an exception to ODCMS 7.3.0.4 is stated, is not a violation of TR 7.3.0.1 or TR 7.3.0.4 for those Tests that do not have to be performed due to the associated inoperable equipment. However, TRs must be met to ensure OPERABILITY prior to declaring the associated equipment OPERABLE (or variable within limits) and restoring compliance with the affected ODCMS.

ODCMS 7.3.0.5

ODCMS 7.3.0.5 establishes the allowance for restoring equipment to service under administrative controls when it has been removed from service or declared inoperable to comply with COMPENSATORY MEASURES. The sole purpose of this ODCMS is to provide an exception to ODCMS 7.3.0.2 (e.g., to not comply with the applicable Required Compensatory Measure(s)) to allow the performance of TRs to demonstrate:

a. The OPERABILITY of the equipment being returned to service; or

b. The OPERABILITY of other equipment.

The administrative controls ensure the time the equipment is returned to service in conflict with the requirements of the COMPENSATORY MEASURES is limited to the time absolutely necessary to perform the allowed TRs. This ODCMS does not provide time to perform any other preventive or corrective maintenance.

An example of demonstrating the OPERABILITY of the equipment being returned to service is taking an inoperable channel or trip system out of the tripped condition after it has been tripped to comply with Required Compensatory Measures since it must be untripped to perform the TRs.

(continued)

BASES

ODCMS 7.3.0.5 (continued)	An example of demonstrating the OPERABILITY of other equipment is taking an inoperable channel or trip system out of the tripped condition to prevent the trip function from occurring during the performance of a TR on another channel in the other trip system. A similar example of demonstrating the OPERABILITY of other equipment is taking an inoperable channel or trip system out of the tripped condition to permit the logic to function and indicate the appropriate response during the performance of a TR on another channel in the same trip system.
ODCMS 7.3.0.6	ODCM 7.3.0.6 delineates the applicability of each ODCMS and associated COMPENSATORY MEASURE to Brunswick Unit 1 and Brunswick Unit 2 operations.

B 7.3.0 TEST REQUIREMENT (TR) APPLICABILITY

BASES

TRs

TR 7.3.0.1 through TR 7.3.0.5 establish the general requirements applicable to all ODCMSs and apply at all times, unless otherwise stated.

TR 7.3.0.1

TR 7.3.0.1 establishes the requirement that TRs must be met during the MODES or other specified conditions in the Applicability for which the requirements of the ODCMS apply, unless otherwise specified in the individual TRs. This ODCMS is to ensure that Tests are performed to verify the OPERABILITY of systems and components, and that variables are within specified limits. Failure to meet a Test within the specified Frequency, in accordance with TR 7.3.0.2, constitutes a failure to meet an ODCMS.

Systems and components are assumed to be OPERABLE when the associated TRs have been met. Nothing in this ODCMS, however, is to be construed as implying that systems or components are OPERABLE when:

a. The systems or components are known to be inoperable, although still meeting the TRs; or

b. The requirements of the Test(s) are known to be not met between required Test performances.

Tests do not have to be performed when the unit is in a MODE or other specified condition for which the requirements of the associated ODCMS are not applicable, unless otherwise specified.

Tests, including Tests invoked by Required Compensatory Measures, do not have to be performed on inoperable equipment because the COMPENSATORY MEASURES define the remedial measures that apply. Tests have to be met and performed in accordance with TR 7.3.0.2, prior to returning equipment to OPERABLE status.

Upon completion of maintenance, appropriate post maintenance testing is required to declare equipment OPERABLE. This includes ensuring applicable Tests are not failed and their most recent performance is in accordance with TR 7.3.0.2. Post maintenance testing may not be possible in the current MODE or other specified conditions in the

(continued)

BASES

TR 7.3.0.1 (continued)

Applicability due to the necessary unit parameters not having been established. In these situations, the equipment may be considered OPERABLE provided testing has been satisfactorily completed to the extent possible and the equipment is not otherwise believed to be incapable of performing its function. This will allow operation to proceed to a MODE or other specified condition where other necessary post maintenance tests can be completed.

TR 7.3.0.2

TR 7.3.0.2 establishes the requirements for meeting the specified Frequency for Tests and any Required Compensatory Measure with a Completion Time that requires the periodic performance of the Required Compensatory Measure on a "once per..." interval.

TR 7.3.0.2 permits a 25% extension of the interval specified in the Frequency. This extension facilitates Test scheduling and considers plant operating conditions that may not be suitable for conducting the Test (e.g., transient conditions or other ongoing Test or maintenance activities).

The 25% extension does not significantly degrade the reliability that results from performing the Test at its specified Frequency. This is based on the recognition that the most probable result of any particular Test being performed is the verification of conformance with the TRs.

As stated in TR 7.3.0.2, the 25% extension also does not apply to the initial portion of a periodic Completion Time that requires performance on a "once per..." basis. The 25% extension applies to each performance after the initial performance. The initial performance of the Required Compensatory Measure, whether it is a particular Test or some other remedial action, is considered a single compensatory measure with a single Completion Time. One reason for not allowing the 25% extension to this Completion Time is that such a compensatory measure may verify that no loss of function has occurred by checking the status of redundant or diverse components or accomplishes the function of the inoperable equipment in an alternative manner.

(continued)

BASES

TR 7.3.0.2 (continued)

The provisions of TR 7.3.0.2 are not intended to be used repeatedly merely as an operational convenience to extend Test intervals (other than those consistent with refueling intervals) or periodic Completion Time intervals beyond those specified.

TR 7.3.0.3

TR 7.3.0.3 establishes the flexibility to defer declaring affected equipment inoperable or an affected variable outside the specified limits when a Test has not been completed within the specified Frequency. A delay period of up to 24 hours or up to the limit of the specified Frequency, whichever is less, applies from the point in time that it is discovered that the Test has not been performed in accordance with TR 7.3.0.2, and not at the time that the specified Frequency was not met.

This delay period provides adequate time to complete Tests that have been missed. This delay period permits the completion of a Test before complying with Required Compensatory Measures or other remedial measures that might preclude completion of the Test.

The basis for this delay period includes consideration of unit conditions, adequate planning, availability of personnel, the time required to perform the Test, the safety significance of the delay in completing the required Test, and the recognition that the most probable result of any particular Test being performed is the verification of conformance with the requirements.

When a Test with a Frequency based not on time intervals, but upon specified unit conditions or operational situations, is discovered not to have been performed when specified, TR 7.3.0.3 allows the full delay period of 24 hours to perform the Test.

TR 7.3.0.3 also provides a time limit for completion of Tests that become applicable as a consequence of MODE changes imposed by Required Compensatory Measures.

(continued)

BASES

TR 7.3.0.3 (continued)

Failure to comply with specified Frequencies for TRs is expected to be an infrequent occurrence. Use of the delay period established by TR 7.3.0.3 is a flexibility which is not intended to be used as an operational convenience to extend Test intervals.

If a Test is not completed within the allowed delay period, then the equipment is considered inoperable or the variable is considered outside the specified limits and the Completion Times of the Required Compensatory Measures for the applicable ODCMS Conditions begin immediately upon expiration of the delay period. If a Test is failed within the delay period, then the equipment is inoperable, or the variable is outside the specified limits and the Completion Times of the Required Compensatory Measures for the applicable ODCMS Conditions begin immediately upon the failure of the Test.

Completion of the Test within the delay period allowed by this ODCMS, or within the Completion Time of the COMPENSATORY MEASURES, restores compliance with TR 7.3.0.1.

TR 7.3.0.4

TR 7.3.0.4 establishes the requirement that all applicable TRs must be met before entry into a MODE or other specified condition in the Applicability. This ODCMS ensures that system and component OPERABILITY requirements and variable limits are met before entry into MODES or other specified conditions in the Applicability for which these systems and components ensure safe operation of the unit.

However, in certain circumstances failing to meet a TR will not result in TR 7.3.0.4 restricting a MODE change or other specified condition change. When a system, subsystem, division, component, device, or variable is inoperable or outside its specified limits, the associated TR(s) are not required to be performed, per TR 7.3.0.1, which states that Tests do not have to be performed on inoperable equipment. When equipment is inoperable, TR 7.3.0.4 does not apply to the associated TR(s) since the requirement for the TR(s) to be performed is removed. Therefore, failing to perform the Test(s) within the specified Frequency does not result in a

(continued)

BASES

TR 7.3.0.4 (continued)

TR 7.3.0.4 restriction to changing MODES or other specified conditions of the Applicability. However, since the ODCMS is not met in this instance, ODCMS 7.3.0.4 will govern any restrictions that may (or may not) apply to MODE or other specified condition changes.

The provisions of TR 7.3.0.4 shall not prevent changes in MODES or other specified conditions in the Applicability that are required to comply with COMPENSATORY MEASURES. In addition, the provisions of TR 7.3.0.4 shall not prevent changes in MODES or other specified conditions in the Applicability that result from any unit shutdown.

The precise requirements for performance of TRs are specified such that exceptions to TR 7.3.0.4 are not necessary. The specific time frames and conditions necessary for meeting the TRs are specified in the Frequency, in the Test, or both. This allows performance of Tests when the prerequisite condition(s) specified in a Test procedure require entry into the MODE or other specified condition in the Applicability of the associated ODCMS prior to the performance or completion of a Test. A Test that could not be performed until after entering the ODCMS Applicability would have its Frequency specified such that it is not "due" until the specific conditions needed are met. Alternately, the Test may be stated in the form of a Note as not required (to be met or performed) until a particular event, condition, or time has been reached. Further discussion of the specific formats of TRs' annotation is found in ODCMS Section 7.1.4, Frequency.

TR 7.3.0.5

TR 7.3.0.5 delineates the applicability of the test activities to Brunswick Unit 1 and Brunswick Unit 2 operations.

B 7.3.1 RADIOACTIVE LIQUID EFFLUENT MONITORING INSTRUMENTATION

BASES

The radioactive liquid effluent monitoring instrumentation is provided to monitor and control, as applicable, the releases of radioactive materials in liquid effluents during actual or potential releases of liquid effluents. The alarm/trip setpoints for these instruments shall be calculated in accordance with the ODCM to ensure that the alarm/trip will occur prior to exceeding the limits of 10 CFR Part 20. The OPERABILITY and use of this instrumentation is consistent with the requirements of General Design Criteria 60, 63, and 64 of Appendix A to 10 CFR Part 50. The purpose of tank level indicating devices is to assure the detection and control of leaks that, if not controlled, could potentially result in the transport of radioactive materials to UNRESTRICTED AREAS.

The initial CHANNEL CALIBRATION for the Table 7.3.1-1, Functions 1 and 3, instruments was performed using National Bureau of Standards traceable sources which verified that each detector would operate properly over its intended energy range and measurement range. For instruments which were operational prior to this specification being implemented, previously established calibration procedures may be substituted for the initial requirement. Subsequent to CHANNEL CALIBRATIONS will be performed using sources that have been related to the initial calibration in order to ensure that each detector is still operational, but the sources need not span the full ranges used in the initial CHANNEL CALIBRATION.

B 7.3.2 RADIOACTIVE GASEOUS EFFLUENT MONITORING INSTRUMENTATION

BASES

The radioactive gaseous effluent monitoring instrumentation is provided to monitor and control, as applicable, the releases of radioactive materials in gaseous effluents during actual or potential releases of gaseous effluents. The alarm/trip setpoints for these instruments shall be calculated in accordance with the ODCM to ensure that the alarm/trip will occur prior to exceeding the limits of 10 CFR Part 20. The OPERABILITY and use of this instrumentation is consistent with the requirements of General Design Criteria 60 and 64 of Appendix A to 10 CFR Part 50.

The main condenser air ejector monitoring instrumentation, the main condenser offgas treatment system monitor, and the explosive gas monitoring instrumentation shown in Table 7.3.2-1 are not considered effluent monitoring instrumentation in the same sense as the other instrumentation listed in the table. Therefore, their alarm/trip setpoints are not necessarily set to ensure that the limits of ODCMS 7.3.7 are not exceeded.

The main condenser air ejector monitoring instrumentation channels are provided to monitor and control gross radioactivity removed from the main condenser. The alarm/trip setpoints for the main condenser air ejector monitor are set to ensure that the limits of Technical Specification 3.7.5 are not exceeded. The alarm/trip setpoint for this monitor shall be calculated in accordance with NRC approved methods to provide reasonable assurance that the potential total body accident dose will not exceed a fraction of the limits specified in 10 CFR Part 100.

This specification also includes provisions for monitoring the concentrations of potentially explosive gas mixtures in the offgas treatment system (hydrogen monitors).

The initial CHANNEL CALIBRATION for the Table 7.3.2-1, Functions 1.a, 2.a, 3.a, 4 and 6, instruments was performed using National Bureau of Standards traceable sources which verified that each detector would operate properly over its intended energy range and measurement range. For instruments which were operational prior to this specification being implemented, previously established calibration procedures may be substituted for the initial requirement. Subsequent CHANNEL CALIBRATIONS will be performed using sources that have been related to the initial calibration in order to ensure that each detector is still operational, but the sources need not span the full ranges used in the initial CHANNEL CALIBRATION.

(continued)

BASES

Regulatory Guide 1.21 requires continuous sampling of iodine and particulate in gaseous effluents and subsequent analysis at least weekly. However, a short downtime period of the sample devices is necessary to accomplish applicable ODCM test requirements, sample analysis, or system purging. This time will be accounted for in sample volume calculations. As such, 45 minutes is provided to initiate the auxiliary sampling system or restore the normal sampling devices to OPERABLE status.

Reference ODCMS 7.3.0.5 and B 7.3.0.5 for the performance of post maintenance testing.

Upon identification of a loss of radioactive gaseous effluent monitoring instrumentation, steps shall be taken immediately to install auxiliary sampling. If this cannot be accomplished, releases via the associated effluent pathway shall be secured. Any monitor downtime will be accounted for in sample volume calculations.

B 7.3.3 CONCENTRATION—LIQUID EFFLUENTS

BASES

This specification is provided to ensure that the concentration of radioactive materials released in liquid waste effluents to UNRESTRICTED AREAS after dilution in the discharge canal will be less than or equal to 10 times the concentration levels specified in 10 CFR Part 20, Appendix B, Table 2, Column 2 to 10 CFR 20.1001-20.2401 for radionuclides other than dissolved and entrained noble gases. This limitation provides additional assurance that the levels of radioactive materials in bodies of water in UNRESTRICTED AREAS will not result in exposures within (1) the Section II.A design objectives of Appendix I, 10 CFR Part 50, to a MEMBER OF THE PUBLIC and (2) the limits of 10 CFR Part 20.1302(b)(2)(i) to the population. The concentration limit for dissolved or entrained noble gases is based upon the assumption that Xe-135 is the controlling radioisotope and its MPC in air (submersion) was converted to an equivalent concentration in water using the methods described in International Commission on Radiological Protection (ICRP), Publication 2.

The required detection capabilities for radioactive materials in liquid waste samples are tabulated in terms of the Lower Limits of Detection (LLDs). Detailed discussion of the LLD and other detection limits can be found in HASL Procedures Manuals, HASL-300 (revised annually), Currie, L. A. "Limits for Qualitative Detection and Quantitative Determination - Application to Radiochemistry" Anal. Chem. 40, 586-93 (1968), and Hartwell, J. K., "Detection Limits for Radioanalytical Counting Techniques," Atlantic Richfield Hanford Company Report ARH-SA-215 (June 1975).

Note that for batch releases, recirculation of at least two tank volumes shall be considered adequate for thorough mixing.

The stabilization pond and service water liquid release types represent potential release pathways and not actual release pathways. Tests of these pathways is intended to alert the plant to a potential problem; analysis for principal gamma emitters should be sufficient to meet this intent. If analysis for principal gamma emitters indicates a problem (i.e., exceeds the trigger level of 5×10^{-6} μCi/ml), then complete sampling and analyses shall be performed as per Table 7.3.3-2. The trigger level of 5×10^{-6} μCi/ml was chosen as being sufficient to provide reasonable assurance of accountability of all nuclides released based upon lower limits of detection and expected concentrations.

B 7.3.4 DOSE—LIQUID EFFLUENTS

BASES

This specification is provided to implement the requirements of Sections II.A, III.A, and IV.A of Appendix I, 10 CFR Part 50. ODCMS 7.3.4 implements the guides set forth in Section II.A of Appendix I. The COMPENSATORY MEASURES provide the required operating flexibility and at the same time implement the guides set forth in Section IV.A of Appendix I of 10 CFR Part 50 to assure that releases of radioactive material in liquid effluents to UNRESTRICTED AREAS will be kept "as low as is reasonably achievable." The dose calculations in the ODCM implement the requirements in Section III.A of Appendix I that conformance with the guides of Appendix I be shown by calculational procedures based on models and data, such that the actual exposure of a MEMBER OF THE PUBLIC through appropriate pathways is unlikely to be substantially underestimated. The equations specified in the ODCM for calculating the doses due to the actual release rates of radioactive materials in liquid effluents will be consistent with the methodology provided in Regulatory Guide 1.109, "Calculation of Annual Doses to Man from Routine Releases of Reactor Effluents for the Purpose of Evaluating Compliance with 10 CFR Part 50, Appendix I," Revision 1, October 1977 and Regulatory Guide 1.113, "Estimating Aquatic Dispersion of Effluents from Accidental and Routine Reactor Releases for the Purpose of Implementing Appendix I," April 1977.

The dose or dose commitment to a MEMBER OF THE PUBLIC is based on the 10 CFR Part 50, Appendix I, guideline of:

a. 1.5 mrem to the total body and 5.0 mrem to any organ during any calendar quarter, and

b. 3 mrem to the total body and 10 mrem to any organ during any calendar year,

from radioactive material in liquid effluents from each reactor unit to UNRESTRICTED AREAS. This specification is written for a two unit site.

B 7.3.5 LIQUID RADWASTE TREATMENT SYSTEM

BASES

The requirement that appropriate portions of this system be used, when specified, provides assurance that the releases of radioactive materials in liquid effluents will be kept "as low as reasonably achievable." This specification implements the requirements of 10 CFR Part 50.36a, General Design Criteria 60 of Appendix A to 10 CFR Part 50 and the design objectives given in Section II.D of Appendix I to 10 CFR Part 50. The specified limits governing the use of appropriate portions of the Liquid Radwaste Treatment System were specified as a suitable fraction of the dose design objectives set forth in Section II.A of Appendix I, 10 CFR Part 50, for liquid effluents.

Mechanical filtration as per system design is considered to be an appropriate component of the Liquid Radwaste Treatment System.

The requirements of 0.12 mrem total body or 0.4 mrem to any organ in a 31-day period is based on two reactor units having a shared Liquid Radwaste Treatment System.

B 7.3.6 LIQUID HOLDUP TANKS

BASES

The tanks listed in this specification include all those outdoor tanks that are not surrounded by liners, dikes, or walls capable of holding the tank contents and do not have tank overflows and surrounding area drains connected to the Liquid Radwaste Treatment System.

Since the condensate storage tanks have continuous influent and effluent, stratification should not occur. Samples taken from the operating condensate transfer pump(s) vent or drain shall be deemed representative of this system.

Appropriate alternatives to the COMPENSATORY MEASURES and TEST REQUIREMENTS are acceptable if they provide reasonable assurance that in the event of an uncontrolled release of the tank's content, the resulting concentrations would be less than 10 times the concentration values in Appendix B, Table 2, Column 2 to 10 CFR 20.1001-20.2401 at the nearest potable water supply and the nearest surface water supply in an UNRESTRICTED AREA.

B 7.3.7 DOSE RATE—GASEOUS EFFLUENTS

BASES

This specification is provided to ensure that the dose rate at and beyond the SITE BOUNDARY from gaseous effluents from all units on the site will be within the annual dose rate limits of 10 CFR Part 20 for UNRESTRICTED AREAS. The annual dose limits are the doses associated with the concentrations of 10 CFR Part 20, Appendix B, Table 2, Column 1. These limits provide reasonable assurance that radioactive material discharged in gaseous effluents will not result in the exposure of a MEMBER OF THE PUBLIC in an UNRESTRICTED AREA, either within or outside the SITE BOUNDARY, to annual average concentrations exceeding the limits specified in Appendix B, Table 2, of 10 CFR Part 20 (10 CFR Part 20.1302(b)(2)(i)). For MEMBERS OF THE PUBLIC who may at times be within the SITE BOUNDARY, the occupancy of that MEMBER OF THE PUBLIC will be sufficiently low to compensate for any increase in the atmospheric diffusion factor above that for the SITE BOUNDARY. The specified release rate limits restrict, at all times, the corresponding gamma and beta dose rates above background to a MEMBER OF THE PUBLIC at or beyond the SITE BOUNDARY to less than or equal to 500 mrems/year to the total body or to less than or equal to 3000 mrems/year to the skin. These release rate limits also restrict, at all times, the corresponding thyroid dose rate above background to a child via the inhalation pathway to less than or equal to 1500 mrems/year.

This specification applies to the release of gaseous effluents from all reactors at the site and from the incineration of waste oil.

With regard to footnotes (c) and (g) of Table 7.3.7-1:

1. The sampling is only required following transients when the primary coolant DEI <u>and</u> the applicable noble gas monitor increase by a factor of 3.
2. To determine whether the Dose Equivalent I-131 concentration in the primary coolant has increased by more than a factor of 3, the iodine-131 analysis performed after the transient will be compared to the most recent routine analysis for Dose Equivalent I-131 concentration performed before the transient.
3. To determine whether the effluent noble gas monitor has increased by more than a factor of 3, the activity indicated on the monitor's chart recorder after the transient will be compared to the activity indicated on the recorder just before the transient occurred.
4. The intent of footnote (c) is to determine the impact of the transient on the isotopic mix release for the applicable effluent pathway.
5. Sampling described in footnote (g) shall be performed on the applicable effluent pathways. For example, a Unit 1 transient could potentially result in sampling the Stack, Unit 1 Reactor Vent, and the Unit 1 Turbine Building Vent. Each of these pathways should be included in the evaluation. Actual sampling will only be performed on the path or pathways that meet the factor of 3 increase criteria.
6. The intent of the sampling is to evaluate the impact on particulate and iodine releases during the transient. The sampling can be exited when both entry conditions (DEI <u>and</u> noble gas monitor) have returned to steady-state levels below a factor of 3 change or after 7 days, whichever condition comes first.

The required detection capabilities for radioactive materials in gaseous waste samples are tabulated in terms of the Lower Limits of Detection (LLDs). Detailed discussion of the LLD and other detection limits can be found in HASL Procedures Manual, <u>HASL-300</u> (revised annually), Currie, L. A., "Limits for Qualitative Detection and Quantitative Determination - Application to Radiochemistry" <u>Anal. Chem. 40</u>, 586-93 (1968), and Hartwell, J. K., "Detection Limits for Radioanalytical Counting Techniques," Atlantic Richfield Hanford Company Report <u>ARH-SA-215</u> (June 1975).

B 7.3.8 DOSE RATE—NOBLE GASES

BASES

This specification is provided to implement the requirements of Sections II.B, III.A, and IV.A of Appendix I, 10 CFR Part 50. ODCMS 7.3.8 implements the guides set forth in Section II.B of Appendix I. The COMPENSATORY MEASURES provide the required operating flexibility and, at the same time, implement the guides set forth in Section IV.A of Appendix I, to assure that the releases of radioactive materials in gaseous effluents to UNRESTRICTED AREAS will be kept "as low as is reasonably achievable." The TEST REQUIREMENTS implement the requirements in Section III.A of Appendix I that conformance with the guides of Appendix I is to be shown by calculational procedures based on models and data such that the actual exposure of a MEMBER OF THE PUBLIC through the appropriate pathways is unlikely to be substantially underestimated. The dose calculations established in the ODCM for calculating the doses due to the actual release rates of radioactive noble gases in gaseous effluents will be consistent with the methodology provided in Regulatory Guide 1.109, "Calculation of Annual Doses to Man from Routine Releases of Reactor Effluents for the Purpose of Evaluating Compliance with 10 CFR Part 50, Appendix I," Revision 1, October 1977 and Regulatory Guide 1.111, "Methods for Estimating Atmospheric Transport and Dispersion of Gaseous Effluents in Routine Releases from Light-Water-Cooled Reactors," Revision 1, July 1977. The ODCM equations provided for determining the air doses at and beyond the SITE BOUNDARY will be based upon the historical annual average atmospheric conditions. NUREG-0133 provides methods for dose calculations consistent with Regulatory Guides 1.109 and 1.111. The limits of this specification are twice the 10 CFR 50 Appendix I per reactor guidelines because they are written for a two unit site.

B 7.3.9 DOSE - IODINE-131, IODINE-133, TRITIUM, AND RADIONUCLIDES IN PARTICULATE FORM

BASES

This specification is provided to implement the requirements of Section II.C, III.A, and IV.A of Appendix I, 10 CFR Part 50. ODCMS 7.3.9 implements the guides set forth in Section II.C of Appendix I. The COMPENSATORY MEASURES provide the required operating flexibility and, at the same time, implements the guides set forth in Section IV.A of Appendix I to assure that the releases of radioactive materials in gaseous effluents to UNRESTRICTED AREAS will be kept "as low as is reasonably achievable." The ODCM calculational methods specified in the TEST REQUIREMENTS implement the requirements in Section III.A of Appendix I that conformance with the guides of Appendix I be shown by calculational procedures based on models and data such that the actual exposure of a MEMBER OF THE PUBLIC through appropriate pathways is unlikely to be substantially underestimated. The ODCM calculational methods for calculating the doses due to the actual release rates of the subject materials are required to be consistent with the methodology provided in Regulatory Guide 1.109, "Calculating of Annual Doses to Man from Routine Releases of Reactor Effluents for the Purpose of Evaluating Compliance with 10 CFR Part 50, Appendix I," Revision 1, October 1977 and Regulatory Guide 1.111, "Methods for Estimating Atmospheric Transport and Dispersion of Gaseous Effluents in Routine Releases from Light-Water-Cooled Reactors," Revision 1, July 1977. These equations also provide for determining the actual doses based upon the historical average atmospheric conditions. The release rate specification for iodine-131, iodine-133, tritium, and radioactive material in particulate form with half-lives greater than 8 days are dependent on the existing radionuclide pathways to man in the areas at and beyond the SITE BOUNDARY. The pathways which are examined in the development of these calculations are: (1) individual inhalation of airborne radionuclides, (2) deposition of radionuclides onto green leafy vegetation with subsequent consumption by man, (3) deposition onto grassy areas where milk animals and meat producing animals graze, with consumption of the milk and meat by man, and (4) deposition on the ground with subsequent exposure of man. The limits of this specification are twice the 10 CFR 50 Appendix I per reactor guidelines because they are written for a two unit site.

Doses due to the incineration of waste oil will be determined in accordance with the ODCM.

B 7.3.10 GASEOUS RADWASTE TREATMENT SYSTEM

BASES

This requirement provides reasonable assurance that the releases of radioactive materials in gaseous effluents will be kept "as low as reasonably achievable." This specification implements the requirements of 10 CFR Part 50.36a, General Design Criterion 60 of Appendix A to 10 CFR Part 50, and the design objectives given in Section II.D of Appendix I to 10 CFR Part 50. The GASEOUS RADWASTE TREATMENT SYSTEM refers to the 30-minute offgas holdup line, stack filter house filtration, and the Augmented Off-Gas-Treatment System.

B 7.3.11 VENTILATION EXHAUST TREATMENT SYSTEM

BASES

This requirement provides reasonable assurance that the releases of radioactive materials in gaseous effluents will be kept "as low as reasonably achievable." This specification implements the requirements of 10 CFR Part 50.36a, General Design Criterion 60 of Appendix A to 10 CFR Part 50, and the design objectives given in Section II.D of Appendix I to 10 CFR Part 50. The specified limits governing the use of the systems were specified as a suitable fraction of the dose design objectives set forth in Sections II.B and II.C of Appendix I, 10 CFR Part 50, for gaseous effluents. At the Brunswick Steam Electric Plant, the only VENTILATION EXHAUST TREATMENT SYSTEMS shall be those installed for the Turbine Buildings' ventilation.

B 7.3.12 EXPLOSIVE GAS MIXTURE

BASES

This specification is provided to ensure that the concentration of potentially explosive gas mixtures contained in the waste gas treatment system is maintained below the flammability limits of hydrogen. Maintaining the concentration of hydrogen below the flammability limits provides assurance that the releases of radioactive materials will be controlled in conformance with the requirements of General Design Criterion 60 of Appendix A to 10 CFR Part 50.

B 7.3.13 DRYWELL VENTING or PURGING

BASES

This specification provides reasonable assurance that releases from drywell VENTING or PURGING operations will not exceed the annual dose limits of 10 CFR Part 20 for UNRESTRICTED AREAS.

B 7.3.14 TOTAL DOSE (40 CFR PART 190)

BASES

This specification is provided to meet the dose limitations of 40 CFR Part 190 that have now been incorporated into 10 CFR Part 20 by 46 FR 18525. The specification requires the preparation and submittal of a Special Report whenever the calculated doses from plant generated radioactive effluents and direct radiation exceed 25 mrems to the total body or any organ, except the thyroid, which shall be limited to less than or equal to 75 mrems. For sites containing up to 4 reactors, it is highly unlikely that the resultant dose to a MEMBER OF THE PUBLIC will exceed the dose limits of 40 CFR Part 190 if the individual reactors remain within the reporting requirement level. The Special Report will describe a course of action that should result in the limitation of the annual dose to a MEMBER OF THE PUBLIC to within the 40 CFR Part 190 limits. For the purposes of the Special Report, it may be assumed that the dose commitment to the MEMBER OF THE PUBLIC from other uranium fuel cycle sources is negligible, with the exception that dose contributions from other nuclear fuel cycle facilities at the same site or within a radius of 8 km must be considered. If the dose to any MEMBER OF THE PUBLIC is estimated to exceed the requirements of 40 CFR Part 190, the Special Report with a request for a variance (provided the release conditions resulting in violation of 40 CFR Part 190 have not already been corrected) in accordance with the provisions of 40 CFR Part 190.11 and 10 CFR Part 20.2203(a)(4) is considered to be a timely request and fulfills the requirements of 40 CFR Part 190 until NRC staff action is completed. The variance only relates to the limits of 40 CFR Part 190, and does not apply in any way to the other requirements for dose limitation of 10 CFR Part 20, as addressed in ODCMSs 7.3.3 through 7.3.14. An individual is not considered a MEMBER OF THE PUBLIC during any period in which he/she is engaged in carrying out any operation that is part of the nuclear fuel cycle.

B 7.3.15 RADIOLOGICAL ENVIRONMENTAL MONITORING PROGRAM

BASES

The radiological environmental monitoring program required by this specification provides measurements of radiation and of radioactive materials in those exposure pathways and for those radionuclides that lead to the highest potential radiation exposures of MEMBERS OF THE PUBLIC resulting from station operation. This monitoring program implements Section IV.B.2 of Appendix I to 10 CFR Part 50 and thereby supplements the radiological effluent monitoring program by verifying that the measurable concentrations of radioactive materials are not higher than expected on the basis of effluent measurements and the modeling of the environmental exposure pathways.

The required detection capabilities for environmental sample analyses are tabulated in terms of the Lower Limits of Detection (LLDs). The LLDs required by Table 7.3.15-3 are considered optimum for routine environmental measurements in industrial laboratories. It should be recognized that the LLD is defined as a priori (before the fact) limit representing the capability of a measurement system and not as a posteriori (after the fact) limit for a particular measurement.

Detailed discussion of the LLD and other detection limits can be found in HASL Procedure Manual, HASL-300 (revised annually), Currie, L. A., "Limits for Qualitative Detection and Quantitative Determination Application to Radiochemistry" Anal. Chem 40, 586-93 (1968), and Hartwell, L. K., "Detection Limits for Radioanalytical Counting Techniques," Atlantic Richfield Hanford Company Report ARH-SA-215 (June 1975).

Groundwater is not monitored by this specification because plant liquid effluents are not tapped as a source for drinking or irrigation purposes.

In the absence of the availability of leafy vegetables intended for human consumption, sampling of indigenous broadleaf vegetation may be performed since the objective of sampling broadleaf vegetation (i.e., to approximate fallout from plant operation) is satisfied in either case.

B 7.3.16 LAND USE CENSUS

BASES

This specification is provided to ensure that changes in the use of the area at and beyond the SITE BOUNDARY are identified and that modifications to the radiological environmental monitoring program are made, if required, as a result of the census. The best information from door-to-door surveys, aerial surveys, or consulting with local agricultural authorities shall be used. This census satisfies the requirements of Section IV.B.3 of Appendix I to 10 CFR Part 50. Restricting the census to gardens of greater than 50 m^2 provides assurance that significant exposure pathways via leafy vegetables will be identified and monitored since a garden of this size is the minimum required to produce the quantity (26 kg/yr) of leafy vegetables assumed in Regulatory Guide 1.109 for consumption by a child. To determine the minimum garden size, the following assumptions were made: (1) 20% of the garden was used for growing broadleaf vegetation (i.e., similar to lettuce and cabbage; and (2) a vegetation yield of 2 kg/m^2.

B 7.3.17 INTERLABORATORY COMPARISON PROGRAM

BASES

The requirement for participation in the Interlaboratory Comparison Program is provided to ensure that independent checks on the precision and accuracy of the measurements of radioactive material in environmental sample matrices are performed as part of the quality assurance program for environmental monitoring in order to demonstrate that the results are reasonably valid for the purposes of Section IV.B.2 of Appendix I to 10 CFR Part 50.

LIST OF TABLES

Table No.	Title	Page
APPENDIX A		
A-1	X/Q VALUES AT THE SPECIAL LOCATIONS FOR RELEASES FROM THE TURBINE BUILDINGS	A-5
A-2	DEPLETED X/Q VALUES AT THE SPECIAL LOCATIONS FOR RELEASES FROM THE TURBINE BUILDINGS	A-6
A-3	D/Q VALUES AT THE SPECIAL LOCATIONS FOR RELEASES FROM THE TURBINE BUILDINGS	A-7
A-4	X/Q VALUES AT THE STANDARD DISTANCES FOR RELEASES FROM THE TURBINE BUILDINGS	A-8
A-5	DEPLETED X/Q VALUES AT THE STANDARD DISTANCES FOR RELEASES FROM THE TURBINE BUILDINGS	A-9
A-6	D/Q VALUES AT THE STANDARD DISTANCES FOR RELEASES FROM THE TURBINE BUILDINGS	A-10
A-7	X/Q VALUES AT THE SPECIAL LOCATIONS FOR RELEASES FROM THE REACTOR BUILDINGS	A-11
A-8	DEPLETED X/Q VALUES AT THE SPECIAL LOCATIONS FOR RELEASES FROM THE REACTOR BUILDINGS	A-12
A-9	D/Q VALUES AT THE SPECIAL LOCATIONS FOR RELEASES FROM THE REACTOR BUILDINGS	A-13
A-10	X/Q VALUES AT THE STANDARD DISTANCES FOR RELEASES FROM THE REACTOR BUILDINGS	A-14
A-11	DEPLETED X/Q VALUES AT THE STANDARD DISTANCES FOR RELEASES FROM THE REACTOR BUILDINGS	A-15
A-12	D/Q VALUES AT THE STANDARD DISTANCES FOR RELEASES FROM THE REACTOR BUILDINGS	A-16
A-13	X/Q VALUES AT THE SPECIAL LOCATIONS FOR RELEASES FROM THE STACK	A-17
A-14	DEPLETED X/Q VALUES AT THE SPECIAL LOCATIONS FOR RELEASES FROM THE STACK	A-18

LIST OF TABLES (Cont'd)

Table No.	Title	Page
APPENDIX A		
A-15	D/Q VALUES AT THE SPECIAL LOCATIONS FOR RELEASES FROM THE STACK	A-19
A-16	X/Q VALUES AT THE STANDARD DISTANCES FOR RELEASES FROM THE STACK	A-20
A-17	DEPLETED X/Q VALUES AT THE STANDARD DISTANCES FOR RELEASES FROM THE STACK	A-21
A-18	D/Q VALUES AT THE STANDARD DISTANCES FOR RELEASES FROM THE STACK	A-22
A-19	BRUNSWICK PLANT SITE INFORMATION TO BE USED FOR GROUND LEVEL CALCULATIONS WITH NRC "XOQDOQ" PROGRAM	A-23
A-20	BRUNSWICK PLANT SITE INFORMATION TO BE USED FOR ELEVATED RELEASE CALCULATIONS WITH NRC "XOQDOQ" PROGRAM	A-26

APPENDIX A

METEOROLOGICAL DISPERSION FACTOR COMPUTATIONS

Carolina Power & Light Company (CP&L) engaged the services of Dames and Moore to assess the transport and dispersion of the effluent in the atmosphere as outlined in Preparation of Radiological Effluent Technical Specifications for Nuclear Power Plants, NUREG 0133 (USNRC, 1978). The methodology for this assessment was based on guidelines presented in Regulatory Guide (RG) 1.111, Revision 1 (USNRC, 1977). The results of the assessment were to provide the relative depositions flux and relative concentrations (undepleted and depleted) based on numerical models acceptable for use in Appendix I evaluations.

Regulatory Guide 1.111 presented three acceptable diffusion models for use in estimating deposition flux and concentrations. These are (1) particle-in-cell model (a variable trajectory model based on the gradient-transport theory), (2) puff-advection model (a variable trajectory model based on the statistical approach to diffusion), and (3) the constant mean wind direction model referred to here as the straight-line trajectory Gaussian diffusion model (the most widely used model based on a statistical approach). It was resolved that for operational efficiency, the straight line described in XOQDOQ Program for the Meteorological Evaluation of Routine Effluent Releases at Nuclear Power Stations (Draft), NUREG 0324 (USNRC, September 1977) would be used for generating the required analyses of Appendix I. To provide a more realistic accounting of the variability of wind around the plant site, terrain/ recirculation correction factors (TCF) were to be determined from a combined puff-advection/straight-line scheme for a one-year meteorological data base.

Dames and Moore was provided a one-year record of meteorological data from the on-site meteorological program at the Brunswick Steam Electric Plant. This data consisted of all collected parameters at both the 11.46-meter and 104.55-meter tower levels for the year 1977. The description of the model used and the results of the computations are presented in Reference 1. The following tables from Reference 1 provide the basis for the meteorological dilution factor development of the Technical Specifications for Appendix I and were the source of the χ/Q and D/Q values utilized to show compliance with 10CFR20 and 10CFR50 for noble gases and radioiodines and particulates.

Tables A-1 through A-6	Relative undepleted concentration, relative depleted concentration, and relative deposition flux estimates for ground-level release for both standard distances and special locations.
Tables A-7 through A-12	Relative undepleted concentration, relative depleted concentration, and relative deposition flux estimates for mixed-mode release for both standard distances and special locations.

Tables A-13 through A-18	Relative undepleted concentration, relative depleted concentration, and relative deposition flux estimates for elevated release for both standard distances and special locations.

Values for χ/Q, depleted χ/Q, and D/Q for releases to special locations are from the standard distance tables. The values used are from the distance nearest the special location in the appropriate sector.

Future Operation Computations

The NRC "XOQDOQ" Program (Revision 1) was obtained and installed on the CP&L computer system. For routine meteorological dispersion evaluations, the "XOQDOQ" Program will be run with the appropriate physical plant data, appropriate meteorological information for the standard distances, and special locations of interest without a terrain/recirculation factor. The input to "XOQDOQ" for ground-level releases are presented in Table A-19 and for elevated releases in Table A-20. The resulting computations will have applied the TCFs to produce a final atmospheric diffusion estimate for the site.

In general, it is concluded that the straight-line model is as reasonable a projection of concentrations as the puff-advection model. By inclusion of the terrain correction factors developed by a combination of the puff-advection/straight-line scheme with the results of the XOQDOQ Program, ready evaluation of on-site meteorological data may be made.

Reference

Chandler, Martin W. and George Hoopes, Revised Radiological Effluent Technical Specifications: Gaseous Effluent Dilution Factors, Prepared for Carolina Power & Light Company, Brunswick Facility, Dames and Moore, January 18, 1979.

TABLE A-1

χ/Q Values at the Special Locations for Releases From the Turbine Buildings

Carolina Power & Light Company - Brunswick
Release Type: Annual
Release Mode: Ground Level
Variable: Relative Concentration (Sec./Cubic Meter)
Calculation Points: Special
Model: Straight Line (ANNX009)
Application of Terrain Correction Factors: Yes
Number of Observations: 8678

Affected Sector	Site Boundary	Dairy*	Meat*	Resident*	Garden*
NNE	2.3E-06	0.	9.4E-07	9.4E-07	9.4E-07
NE	2.9E-06	1.4E-07	0.	0.	0.
ENE	3.2E-06	0.	0.	0.	0.
E	3.9E-06	0.	1.5E-06	1.5E-06	0.
ESE	5.2E-06	0.	5.2E-06	1.0E-06	1.0E-06
SE	3.4E-06	0.	3.4E-06	3.4E-06	0.
SSE	7.5E-06	0.	7.5E-06	7.5E-06	7.5E-06
S	3.8E-06	0.	0.	1.6E-06	9.8E-07
SSW	2.8E-06	0.	1.2E-06	1.2E-06	1.2E-06
SW	2.5E-06	0.	2.5E-06	2.5E-06	2.5E-06
WSW	1.8E-06	0.	3.8E-07	7.5E-07	7.5E-07
W	1.5E-06	0.	0.	1.5E-06	1.5E-06
WNW	1.2E-06	0.	0.	1.2E-06	1.2E-06
NW	9.7E-07	0.	0.	9.7E-07	9.7E-07
NNW	1.3E-06	0.	0.	1.3E-06	1.3E-06
N	1.4E-06	0.	0.	1.4E-06	1.4E-06

*A zero indicates that this point was not calculated.

TABLE A-2

Depleted χ/Q Values at the Special Locations for Releases From the Turbine Buildings

Carolina Power & Light Company - Brunswick
Release Type: Annual
Release Mode: Ground Level
Variable: Relative Depleted Concentration (Sec./Cubic Meter)
Calculation Points: Special
Model: Straight Line (ANNX009)
Application of Terrain Correction Factors: Yes
Number of Observations: 8678

Affected Sector	Site Boundary	Dairy*	Meat*	Resident*	Garden*
NNE	2.0E-06	0.	8.1E-07	8.1E-07	8.1E-07
NE	2.6E-06	1.0E-07	0.	0.	0.
ENE	2.9E-06	0.	0.	0.	0.
E	3.4E-06	0.	1.3E-06	1.3E-06	0.
ESE	4.6E-06	0.	4.6E-06	8.7E-07	8.7E-07
SE	3.1E-06	0.	3.1E-06	3.1E-06	0.
SSE	6.8E-06	0.	6.8E-06	6.8E-06	6.8E-06
S	3.5E-06	0.	0.	1.3E-06	8.1E-07
SSW	2.5E-06	0.	1.0E-06	1.0E-06	1.0E-06
SW	2.4E-06	0.	2.4E-06	2.4E-06	2.4E-06
WSW	1.5E-06	0.	3.2E-07	6.4E-07	6.4E-07
W	1.3E-06	0.	0.	1.3E-06	1.3E-06
WNW	1.1E-06	0.	0.	1.1E-06	1.1E-06
NW	8.7E-07	0.	0.	8.7E-07	8.7E-07
NNW	1.1E-06	0.	0.	1.1E-06	1.1E-06
N	1.2E-06	0.	0.	1.2E-06	1.2E-06

*A zero indicates that this point was not calculated.

TABLE A-3

D/Q Values at the Special Locations for Releases From the Turbine Buildings

Carolina Power & Light Company - Brunswick
Release Type: Annual
Release Mode: Ground Level
Variable: Relative Deposition (Meter**-2)
Calculation Points: Special
Model: Straight Line (ANNX009)
Application of Terrain Correction Factors: Yes
Number of Observations: 8678

Affected Sector	Site Boundary	Dairy*	Meat*	Resident*	Garden*
NNE	1.3E-08	0.	4.8E-09	4.8E-09	4.8E-09
NE	1.9E-08	5.7E-10	0.	0.	0.
ENE	9.4E-09	0.	0.	0.	0.
E	8.6E-09	0.	3.1E-09	3.1E-09	0.
ESE	1.3E-08	0.	1.3E-08	2.2E-09	2.2E-09
SE	8.4E-09	0.	8.4E-09	8.4E-09	0.
SSE	1.5E-08	0.	1.5E-08	1.5E-08	1.5E-08
S	8.3E-09	0.	0.	3.2E-09	1.8E-09
SSW	7.7E-09	0.	3.0E-09	3.0E-09	3.0E-09
SW	1.1E-08	0.	1.1E-08	1.1E-08	1.1E-08
WSW	7.0E-09	0.	1.3E-09	2.7E-09	2.7E-09
W	5.1E-09	0.	0.	5.1E-09	5.1E-09
WNW	3.8E-09	0.	0.	3.8E-09	3.8E-09
NW	3.5E-09	0.	0.	3.5E-09	3.5E-09
NNW	5.0E-09	0.	0.	5.0E-09	5.0E-09
N	6.3E-09	0.	0.	6.3E-09	6.3E-09

*A zero indicates that this point was not calculated.

TABLE A-4

χ/Q Values at the Standard Distances for Releases from the Turbine Buildings

Carolina Power & Light Company - Brunswick
Release Type: Annual
Release Mode: Ground Level
Variable: Relative Concentration (Sec./Cubic Meter)
Calculation Points: Standard
Model: Straight Line (ANNX009)
Application of Terrain Correction Factors: Yes
Number of Observations: 8678

Base Distance in Miles/Kilometers

Aftd Sect	Design Dist Mi	.25 .40	.75 1.21	1.25 2.01	1.75 2.82	2.25 3.62	2.75 4.42	3.25 5.23	3.75 6.03	4.25 6.84	4.75 7.64
NNE	0.	1.5E-05	2.3E-06	9.4E-07	5.9E-07	3.5E-07	2.4E-07	1.9E-07	1.5E-07	1.2E-07	9.0E-08
NE	0.	2.0E-05	2.9E-06	1.3E-06	7.3E-07	4.5E-07	3.4E-07	2.7E-07	2.0E-07	1.7E-07	1.4E-07
ENE	0.	2.1E-05	3.2E-06	1.2E-06	6.5E-07	4.8E-07	3.6E-07	2.9E-07	2.1E-07	1.8E-07	1.4E-07
E	0.	2.9E-05	3.9E-06	1.5E-06	9.1E-07	6.6E-07	4.4E-07	3.5E-07	2.8E-07	2.2E-07	1.9E-07
ESE	0.	3.2E-05	5.2E-06	2.2E-06	1.0E-06	6.5E-07	4.4E-07	3.6E-07	2.9E-07	2.4E-07	1.9E-07
SE	0.	2.3E-05	3.4E-06	1.6E-06	7.9E-07	4.8E-07	3.3E-07	2.4E-07	2.2E-07	1.8E-07	1.6E-07
SSE	0.	4.4E-05	7.5E-06	3.1E-06	1.8E-06	1.2E-06	7.7E-07	5.1E-07	3.9E-07	3.2E-07	2.5E-07
S	0.	2.7E-05	3.8E-06	1.6E-06	9.8E-07	7.2E-07	4.9E-07	3.7E-07	2.9E-07	2.2E-07	1.8E-07
SSW	0.	1.9E-05	2.8E-06	1.2E-06	8.0E-07	4.9E-07	2.9E-07	2.3E-07	2.2E-07	1.3E-07	1.1E-07
SW	0.	1.8E-05	2.5E-06	1.1E-06	6.6E-07	4.9E-07	2.8E-07	2.2E-07	1.7E-07	1.4E-07	1.1E-07
WSW	0.	1.5E-05	1.8E-06	7.5E-07	3.8E-07	2.8E-07	1.8E-07	1.5E-07	1.2E-07	9.5E-08	7.9E-08
W	0.	1.3E-05	1.5E-06	6.9E-07	3.3E-07	2.2E-07	1.5E-07	1.1E-07	9.4E-08	8.1E-08	5.2E-08
WNW	0.	1.0E-05	1.2E-06	6.0E-07	2.8E-07	1.6E-07	1.3E-07	8.6E-08	7.2E-08	5.4E-08	4.4E-08
NW	0.	7.1E-06	9.7E-07	3.5E-07	2.1E-07	1.6E-07	1.2E-07	7.8E-08	6.6E-08	4.6E-08	3.9E-08
NNW	0.	8.9E-06	1.3E-06	5.4E-07	2.7E-07	1.7E-07	1.3E-07	1.1E-07	9.3E-08	6.6E-08	5.3E-08
N	0.	9.2E-06	1.4E-06	5.1E-07	3.3E-07	2.1E-07	1.6E-07	1.3E-07	1.1E-07	8.1E-08	7.0E-08

Number of Valid Observations	8678
Number of Invalid Observations	82
Number of Calms Lower Level	125
Number of Calms Upper Level	0

TABLE A-5

Depleted χ/Q Values at the Standard Distances for Releases from the Turbine Buildings

Carolina Power & Light Company - Brunswick
Release Type: Annual
Release Mode: Ground Level
Variable: Relative Concentration (Sec./Cubic Meter)
Calculation Points: Standard
Model: Straight Line (ANNX009)
Application of Terrain Correction Factors: Yes
Number of Observations: 8678

Base Distance in Miles/Kilometers

Aftd Sect	Design Dist Mi	.25 .40	.75 1.21	1.25 2.01	1.75 2.82	2.25 3.62	2.75 4.42	3.25 5.23	3.75 6.03	4.25 6.84	4.75 7.64
NNE	0.	1.5E-05	2.0E-06	8.1E-07	4.8E-07	2.8E-07	1.9E-07	1.5E-07	1.1E-07	8.9E-08	6.8E-08
NE	0.	1.8E-05	2.6E-06	1.1E-06	6.1E-07	3.7E-07	2.6E-07	2.1E-07	1.5E-07	1.2E-07	1.0E-07
ENE	0.	2.0E-05	2.9E-06	1.0E-06	5.5E-07	3.9E-07	2.8E-07	2.2E-07	1.6E-07	1.3E-07	1.0E-07
E	0.	2.7E-05	3.4E-06	1.3E-06	7.6E-07	5.3E-07	3.5E-07	2.6E-07	2.2E-07	1.6E-07	1.4E-07
ESE	0.	3.0E-05	4.6E-06	1.9E-06	8.7E-07	5.3E-07	3.5E-07	2.8E-07	2.3E-07	1.7E-07	1.4E-07
SE	0.	2.2E-05	3.1E-06	1.3E-06	6.6E-07	3.9E-07	2.6E-07	1.9E-07	1.6E-07	1.3E-07	1.2E-07
SSE	0.	4.2E-05	6.8E-06	2.7E-06	1.5E-06	9.9E-07	6.1E-07	4.0E-07	3.0E-07	2.4E-07	1.9E-07
S	0.	2.5E-05	3.5E-06	1.3E-06	8.1E-07	5.9E-07	3.9E-07	2.9E-07	2.2E-07	1.6E-07	1.4E-07
SSW	0.	1.9E-05	2.5E-06	1.0E-06	6.6E-07	4.0E-07	2.3E-07	1.8E-07	1.6E-07	1.0E-07	8.3E-08
SW	0.	1.7E-05	2.4E-06	9.8E-07	5.5E-07	3.9E-07	2.3E-07	1.7E-07	1.3E-07	1.1E-07	9.0E-08
WSW	0.	1.4E-05	1.5E-06	6.4E-07	3.2E-07	2.2E-07	1.4E-07	1.1E-07	9.2E-08	7.0E-08	5.9E-08
W	0.	1.2E-05	1.3E-06	5.9E-07	2.7E-07	1.8E-07	1.1E-07	8.3E-08	7.2E-08	6.1E-08	3.8E-08
WNW	0.	9.9E-06	1.1E-06	5.2E-07	2.4E-07	1.3E-07	1.0E-07	6.6E-08	5.5E-08	4.1E-08	3.3E-08
NW	0.	6.7E-06	8.7E-07	3.0E-07	1.8E-07	1.3E-07	9.4E-08	6.1E-08	5.1E-08	3.5E-08	3.0E-08
NNW	0.	8.5E-06	1.1E-06	4.7E-07	2.2E-07	1.3E-07	1.1E-07	8.3E-08	7.2E-08	5.0E-08	3.9E-08
N	0.	8.6E-06	1.2E-06	4.4E-07	2.8E-07	1.7E-07	1.3E-07	1.0E-07	8.2E-08	6.1E-08	5.1E-08

Number of Valid Observations	8678
Number of Invalid Observations	82
Number of Calms Lower Level	125
Number of Calms Upper Level	0

TABLE A-6

D/Q Values at the Standard Distances for Releases from the Turbine Buildings

Carolina Power & Light Company - Brunswick
Release Type: Annual
Release Mode: Ground Level
Variable: Relative Deposition (Meter**-2)
Calculation Points: Standard
Model: Straight Line (ANNX009)
Application of Terrain Correction Factors: Yes
Number of Observations: 8678

Base Distance in Miles/Kilometers

Aftd Sect	Design Dist Mi	.25 .40	.75 1.21	1.25 2.01	1.75 2.82	2.25 3.62	2.75 4.42	3.25 5.23	3.75 6.03	4.25 6.84	4.75 7.64
NNE	0.	8.6E-08	1.3E-08	4.8E-09	2.8E-09	1.5E-09	9.9E-10	7.7E-10	5.7E-10	4.3E-10	3.3E-10
NE	0.	1.3E-07	1.9E-08	7.6E-09	4.0E-09	2.3E-09	1.6E-09	1.3E-09	8.8E-10	6.8E-10	5.7E-10
ENE	0.	5.8E-08	9.4E-09	3.2E-09	1.6E-09	1.1E-09	7.5E-10	5.5E-10	3.9E-10	3.0E-10	2.3E-10
E	0.	6.2E-08	8.6E-09	3.1E-09	1.7E-09	1.1E-09	6.9E-10	5.1E-10	3.9E-10	2.9E-10	2.3E-10
ESE	0.	7.2E-08	1.3E-08	5.0E-09	2.2E-09	1.2E-09	7.6E-10	6.0E-10	4.7E-10	3.5E-10	2.6E-10
SE	0.	5.1E-08	8.4E-09	3.3E-09	1.6E-09	8.6E-10	5.6E-10	3.8E-10	3.3E-10	2.6E-10	2.2E-10
SSE	0.	8.2E-08	1.5E-08	5.8E-09	3.0E-09	1.8E-09	1.1E-09	6.8E-10	4.9E-10	3.8E-10	2.9E-10
S	0.	5.6E-08	8.3E-09	3.2E-09	1.8E-09	1.2E-09	7.5E-10	5.4E-10	3.9E-10	2.9E-10	2.3E-10
SSW	0.	5.2E-08	7.7E-09	3.0E-09	1.9E-09	1.1E-09	5.8E-10	4.3E-10	3.8E-10	2.2E-10	1.8E-10
SW	0.	7.5E-08	1.1E-08	4.3E-09	2.4E-09	1.6E-09	8.8E-10	6.4E-10	4.6E-10	3.7E-10	3.1E-10
WSW	0.	6.0E-08	7.0E-09	2.7E-09	1.3E-09	8.8E-10	5.2E-10	4.0E-10	3.3E-10	2.4E-10	2.0E-10
W	0.	4.1E-08	5.1E-09	2.0E-09	9.2E-10	5.7E-10	3.6E-10	2.6E-10	2.1E-10	1.7E-10	1.0E-10
WNW	0.	3.4E-08	3.8E-09	1.7E-09	7.3E-10	3.9E-10	3.0E-10	1.9E-10	1.5E-10	1.1E-10	8.4E-11
NW	0.	2.7E-08	3.5E-09	1.1E-09	6.6E-10	4.7E-10	3.3E-10	2.1E-10	1.7E-10	1.1E-10	9.6E-11
NNW	0.	3.6E-08	5.0E-09	1.9E-09	8.5E-10	5.0E-10	3.8E-10	2.8E-10	2.4E-10	1.6E-10	1.3E-10
N	0.	4.4E-08	6.3E-09	2.1E-09	1.3E-09	8.0E-10	5.6E-10	4.5E-10	3.5E-10	2.5E-10	2.1E-10

Number of Valid Observations	8678
Number of Invalid Observations	82
Number of Calms Lower Level	125
Number of Calms Upper Level	0

TABLE A-7

χ/Q Values at the Special Locations for Releases From the Reactor Buildings

Carolina Power & Light Company - Brunswick
Release Type: Annual
Release Mode: Mixed Mode
Variable: Relative Concentration (Sec./Cubic Meter)
Calculation Points: Special
Model: Straight Line (ANNX009)
Application of Terrain Correction Factors: Yes
Number of Observations: 8678

Affected Sector	Site Boundary	Dairy*	Meat*	Resident*	Garden*
NNE	1.0E-07	0.	7.8E-08	7.8E-08	7.8E-08
NE	2.0E-07	4.1E-08	0.	0.	0.
ENE	6.5E-08	0.	0.	0.	0.
E	4.8E-08	0.	3.5E-08	3.5E-08	0.
ESE	6.9E-08	0.	6.9E-08	3.9E-08	3.9E-08
SE	4.1E-08	0.	4.1E-08	4.1E-08	0.
SSE	7.6E-08	0.	7.6E-08	7.6E-08	7.6E-08
S	4.5E-08	0.	0.	3.5E-08	2.8E-08
SSW	4.7E-08	0.	4.7E-08	4.7E-08	4.7E-08
SW	6.4E-08	0.	6.4E-08	6.4E-08	6.4E-08
WSW	4.1E-08	0.	3.9E-08	4.3E-08	4.3E-08
W	3.4E-08	0.	0.	3.4E-08	3.4E-08
WNW	1.8E-08	0.	0.	1.8E-08	1.8E-08
NW	1.9E-08	0.	0.	1.9E-08	1.9E-08
NNW	3.2E-08	0.	0.	3.2E-08	3.2E-08
N	4.0E-08	0.	0.	4.0E-08	4.0E-08

*A zero indicates that this point was not calculated.

TABLE A-8

Depleted χ/Q Values at the Special Locations for Releases From the Reactor Buildings

Carolina Power & Light Company - Brunswick
Release Type: Annual
Release Mode: Mixed Mode
Variable: Relative Depleted Concentration (Sec./Cubic Meter)
Calculation Points: Special
Model: Straight Line (ANNX009)
Application of Terrain Correction Factors: Yes
Number of Observations: 8678

Affected Sector	Site Boundary	Dairy*	Meat*	Resident*	Garden*
NNE	9.1E-08	0.	7.8E-08	7.8E-08	7.8E-08
NE	1.9E-07	3.7E-08	0.	0.	0.
ENE	6.1E-08	0.	0.	0.	0.
E	4.4E-08	0.	3.2E-08	3.2E-08	0.
ESE	6.4E-08	0.	6.4E-08	3.7E-08	3.7E-08
SE	3.8E-08	0.	3.8E-08	3.8E-08	0.
SSE	7.1E-08	0.	7.1E-08	7.1E-08	7.1E-08
S	4.2E-08	0.	0.	3.3E-08	2.7E-08
SSW	4.3E-08	0.	4.4E-08	4.4E-08	4.4E-08
SW	6.0E-08	0.	6.0E-08	6.0E-08	6.0E-08
WSW	3.9E-08	0.	3.8E-08	4.2E-08	4.2E-08
W	3.3E-08	0.	0.	3.3E-08	3.3E-08
WNW	1.7E-08	0.	0.	1.7E-08	1.7E-08
NW	1.8E-08	0.	0.	1.8E-08	1.8E-08
NNW	3.0E-08	0.	0.	3.0E-08	3.0E-08
N	3.7E-08	0.	0.	3.7E-08	3.7E-08

*A zero indicates that this point was not calculated.

TABLE A-9

D/Q Values at the Special Locations for Releases From the Reactor Buildings

Carolina Power & Light Company - Brunswick
Release Type: Annual
Release Mode: Mixed Mode
Variable: Relative Deposition (Meter**-2)
Calculation Points: Special
Model: Straight Line (ANNX009)
Application of Terrain Correction Factors: Yes
Number of Observations: 8678

Affected Sector	Site Boundary	Dairy*	Meat*	Resident*	Garden*
NNE	2.0E-09	0.	1.1E-09	1.1E-09	1.1E-09
NE	4.3E-09	2.7E-10	0.	0.	0.
ENE	1.1E-09	0.	0.	0.	0.
E	4.6E-10	0.	2.5E-10	2.5E-10	0.
ESE	1.1E-09	0.	1.1E-09	3.3E-10	3.3E-10
SE	7.6E-10	0.	7.6E-10	7.6E-10	0.
SSE	1.2E-09	0.	1.2E-09	1.2E-09	1.2E-09
S	5.7E-10	0.	0.	3.4E-10	2.3E-10
SSW	7.7E-10	0.	5.2E-10	5.2E-10	5.2E-10
SW	1.2E-09	0.	1.2E-09	1.2E-09	1.2E-09
WSW	8.9E-10	0.	4.1E-10	5.9E-10	5.9E-10
W	6.6E-10	0.	0.	6.6E-10	6.6E-10
WNW	2.7E-10	0.	0.	2.7E-10	2.7E-10
NW	3.1E-10	0.	0.	3.1E-10	3.1E-10
NNW	4.0E-10	0.	0.	4.0E-10	4.0E-10
N	5.6E-10	0.	0.	5.6E-10	5.6E-10

*A zero indicates that this point was not calculated.

TABLE A-10

χ/Q Values at the Standard Distances for Releases from the Reactor Buildings

Carolina Power & Light Company - Brunswick
Release Type: Annual
Release Mode: Mixed Mode
Variable: Relative Concentration (Sec./Cubic Meter)
Calculation Points: Standard
Model: Straight Line (ANNX009)
Application of Terrain Correction Factors: Yes
Number of Observations: 8678

Base Distance in Miles/Kilometers

Aftd Sect	Design Dist Mi	.25 .40	.75 1.21	1.25 2.01	1.75 2.82	2.25 3.62	2.75 4.42	3.25 5.23	3.75 6.03	4.25 6.84	4.75 7.64
NNE	0.	5.6E-07	1.0E-07	7.8E-08	6.3E-08	5.2E-08	4.1E-08	3.6E-08	3.1E-08	2.7E-08	2.4E-08
NE	0.	5.5E-07	2.0E-07	1.5E-07	1.2E-07	9.4E-08	7.6E-08	6.3E-08	5.3E-08	4.6E-08	4.1E-08
ENE	0.	1.6E-06	6.5E-08	5.8E-08	5.4E-08	4.9E-08	4.3E-08	3.9E-08	3.5E-08	3.1E-08	2.9E-08
E	0.	2.9E-07	4.8E-08	3.5E-08	2.9E-08	2.7E-08	2.3E-08	2.2E-08	1.8E-08	1.7E-08	1.5E-08
ESE	0.	1.2E-07	6.9E-08	5.0E-08	3.9E-08	3.5E-08	3.1E-08	2.6E-08	2.3E-08	2.0E-08	1.7E-08
SE	0.	7.8E-08	4.1E-08	3.6E-08	2.7E-08	2.0E-08	1.8E-08	1.7E-08	1.5E-08	1.3E-08	1.2E-08
SSE	0.	2.2E-07	7.6E-08	5.6E-08	4.2E-08	3.5E-08	2.9E-08	2.5E-08	2.2E-08	1.9E-08	1.6E-08
S	0.	4.2E-07	4.5E-08	3.5E-08	2.8E-08	2.5E-08	2.4E-08	2.1E-08	1.8E-08	1.6E-08	1.4E-08
SSW	0.	5.9E-07	4.7E-08	4.7E-08	4.1E-08	3.7E-08	2.9E-08	2.7E-08	2.3E-08	2.0E-08	1.8E-08
SW	0.	1.8E-07	6.4E-08	5.5E-08	4.4E-08	3.8E-08	3.1E-08	2.7E-08	2.4E-08	2.1E-08	1.9E-08
WSW	0.	8.9E-08	4.1E-08	4.3E-08	3.9E-08	3.4E-08	2.8E-08	2.5E-08	2.5E-08	2.2E-08	1.9E-08
W	0.	3.6E-08	3.4E-08	3.8E-08	3.7E-08	3.1E-08	2.8E-08	2.6E-08	2.2E-08	2.1E-08	1.8E-08
WNW	0.	4.1E-08	1.8E-08	2.2E-08	2.4E-08	2.3E-08	2.0E-08	1.8E-08	1.6E-08	1.4E-08	1.2E-08
NW	0.	3.0E-08	1.9E-08	2.3E-08	2.0E-08	1.9E-08	1.9E-08	1.6E-08	1.4E-08	1.3E-08	1.2E-08
NNW	0.	4.9E-07	3.2E-08	2.7E-08	2.4E-08	2.0E-08	1.8E-08	1.6E-08	1.5E-08	1.4E-08	1.3E-08
N	0.	6.3E-07	4.0E-08	3.0E-08	2.9E-08	2.7E-08	2.6E-08	2.6E-08	2.1E-08	1.8E-08	1.7E-08

Number of Valid Observations	8678
Number of Invalid Observations	82
Number of Calms Lower Level	125
Number of Calms Upper Level	0

TABLE A-11

Depleted x/Q Values at the Standard Distances for Releases from the Reactor Buildings

Carolina Power & Light Company - Brunswick
Release Type: Annual
Release Mode: Mixed Mode
Variable: Relative Depleted Concentration (Sec./Cubic Meter)
Calculation Points: Standard
Model: Straight Line (ANNX009)
Application of Terrain Correction Factors: Yes
Number of Observations: 8678

Base Distance in Miles/Kilometers

Aftd Sect	Design Dist Mi	.25 .40	.75 1.21	1.25 2.01	1.75 2.82	2.25 3.62	2.75 4.42	3.25 5.23	3.75 6.03	4.25 6.84	4.75 7.64
NNE	0.	5.4E-07	9.1E-08	7.8E-08	5.9E-08	4.9E-08	3.8E-08	3.3E-08	2.8E-08	2.5E-08	2.2E-08
NE	0.	5.3E-07	1.9E-07	1.4E-07	1.1E-07	8.7E-08	7.1E-08	5.9E-08	5.0E-08	4.3E-08	3.7E-08
ENE	0.	1.5E-06	6.1E-08	5.6E-08	5.2E-08	4.7E-08	4.1E-08	3.7E-08	3.3E-08	3.0E-08	2.8E-08
E	0.	2.8E-07	4.4E-08	3.2E-08	2.7E-08	2.5E-08	2.2E-08	2.1E-08	1.8E-08	1.6E-08	1.4E-08
ESE	0.	1.1E-07	6.4E-08	4.6E-08	3.7E-08	3.3E-08	2.9E-08	2.4E-08	2.2E-08	1.8E-08	1.6E-08
SE	0.	7.4E-08	3.8E-08	3.3E-08	2.5E-08	1.9E-08	1.7E-08	1.5E-08	1.4E-08	1.2E-08	1.2E-08
SSE	0.	2.1E-07	7.1E-08	5.2E-08	3.9E-08	3.2E-08	2.6E-08	2.3E-08	2.0E-08	1.7E-08	1.5E-08
S	0.	4.0E-07	4.2E-08	3.3E-08	2.7E-08	2.3E-08	2.3E-08	1.9E-08	1.7E-08	1.5E-08	1.3E-08
SSW	0.	5.9E-07	4.3E-08	4.4E-08	3.9E-08	3.5E-08	2.7E-08	2.6E-08	2.2E-08	1.9E-08	1.7E-08
SW	0.	1.7E-07	6.0E-08	5.2E-08	4.2E-08	3.6E-08	2.9E-08	2.5E-08	2.2E-08	2.0E-08	1.7E-08
WSW	0.	8.2E-08	3.9E-08	4.2E-08	3.8E-08	3.2E-08	2.7E-08	2.4E-08	2.4E-08	2.1E-08	1.8E-08
W	0.	3.4E-08	3.3E-08	3.6E-08	3.6E-08	3.0E-08	2.7E-08	2.5E-08	2.1E-08	2.0E-08	1.7E-08
WNW	0.	3.9E-08	1.7E-08	2.1E-08	2.3E-08	2.2E-08	1.9E-08	1.7E-08	1.6E-08	1.3E-08	1.1E-08
NW	0.	2.9E-08	1.8E-08	2.3E-08	2.0E-08	1.8E-08	1.8E-08	1.6E-08	1.4E-08	1.3E-08	1.2E-08
NNW	0.	4.5E-07	3.0E-08	2.5E-08	2.3E-08	1.9E-08	1.7E-08	1.5E-08	1.4E-08	1.3E-08	1.2E-08
N	0.	5.8E-07	3.7E-08	2.9E-08	2.8E-08	2.6E-08	2.5E-08	2.4E-08	2.0E-08	1.7E-08	1.6E-08

Number of Valid Observations	8678
Number of Invalid Observations	82
Number of Calms Lower Level	12
Number of Calms Upper Level	0

TABLE A-12

D/Q Values at the Standard Distances for Releases from the Reactor Buildings

Carolina Power & Light Company - Brunswick
Release Type: Annual
Release Mode: Mixed Mode
Variable: Relative Deposition (Meter**-2)
Calculation Points: Standard
Model: Straight Line (ANNX009)
Application of Terrain Correction Factors: Yes
Number of Observations: 8678

Base Distance in Miles/Kilometers

Aftd Sect	Design Dist Mi	.25 .40	.75 1.21	1.25 2.01	1.75 2.82	2.25 3.62	2.75 4.42	3.25 5.23	3.75 6.03	4.25 6.84	4.75 7.64
NNE	0.	1.1E-08	2.0E-09	1.1E-09	7.2E-10	5.0E-10	3.5E-10	2.8E-10	2.2E-10	1.7E-10	1.5E-10
NE	0.	1.1E-08	4.3E-09	2.3E-09	1.5E-09	9.8E-10	7.2E-10	5.3E-10	4.2E-10	3.3E-10	2.7E-10
ENE	0.	1.9E-08	1.1E-09	5.8E-10	3.9E-10	2.8E-10	2.2E-10	1.7E-10	1.4E-10	1.1E-10	9.7E-11
E	0.	2.1E-09	4.6E-10	2.5E-10	1.6E-10	1.2E-10	9.0E-11	7.5E-11	5.7E-11	4.8E-11	3.8E-11
ESE	0.	1.3E-09	1.1E-09	5.4E-10	3.3E-10	2.4E-10	1.9E-10	1.3E-10	1.1E-10	8.3E-11	6.9E-11
SE	0.	1.3E-09	7.6E-10	4.9E-10	2.8E-10	1.8E-10	1.3E-10	1.1E-10	8.9E-11	6.7E-11	6.1E-11
SSE	0.	2.4E-09	1.2E-09	6.7E-10	4.1E-10	2.8E-10	2.1E-10	1.6E-10	1.3E-10	1.0E-10	8.2E-11
S	0.	3.6E-09	5.7E-10	3.4E-10	2.3E-10	1.7E-10	1.4E-10	1.0E-10	8.2E-11	6.5E-11	5.5E-11
SSW	0.	8.0E-09	7.7E-10	5.2E-10	3.5E-10	2.6E-10	1.8E-10	1.5E-10	1.1E-10	9.3E-11	7.4E-11
SW	0.	3.4E-09	1.2E-09	7.3E-10	4.5E-10	3.3E-10	2.3E-10	1.7E-10	1.4E-10	1.2E-10	9.4E-11
WSW	0.	1.8E-09	8.9E-10	5.9E-10	4.1E-10	2.9E-10	2.1E-10	1.7E-10	1.5E-10	1.2E-10	1.0E-10
W	0.	7.9E-10	6.6E-10	4.3E-10	2.9E-10	1.9E-10	1.5E-10	1.2E-10	8.6E-11	7.7E-11	6.4E-11
WNW	0.	5.8E-10	2.7E-10	2.0E-10	1.7E-10	1.3E-10	8.8E-11	6.8E-11	5.5E-11	4.2E-11	3.3E-11
NW	0.	5.4E-10	3.1E-10	2.3E-10	1.5E-10	1.1E-10	8.9E-11	6.9E-11	5.4E-11	4.4E-11	3.9E-11
NNW	0.	5.3E-09	4.0E-10	2.2E-10	1.6E-10	1.0E-10	7.6E-11	6.1E-11	5.0E-11	4.2E-11	3.4E-11
N	0.	8.7E-09	5.6E-10	2.8E-10	2.1E-10	1.6E-10	1.4E-10	1.1E-10	8.1E-11	6.4E-11	5.7E-11

Number of Valid Observations 8678
Number of Invalid Observations 82
Number of Calms Lower Level 12
Number of Calms Upper Level 0

TABLE A-13

χ/Q Values at the Special Locations for Releases From the Stack

Carolina Power & Light Company - Brunswick
Release Type: Annual
Release Mode: Elevated
Variable: Relative Concentration
Calculation Points: Special
Model: Straight Line
Application of Terrain Correction Factors: Yes
Number of Observations: 8678

Accounting for Stack Center Offset

Affected Sector	Site Boundary	Dairy*	Meat*	Resident*	Garden*
NNE	1.3E-08	0.	2.3E-08	2.3E-08	2.3E-08
NE	2.5E-08	2.4E-08	0.	0.	0.
ENE	7.2E-09	0.	0.	0.	0.
E	3.6E-09	0.	7.6E-09	7.6E-09	0.
ESE	7.7E-09	0.	7.7E-09	1.3E-08	1.3E-08
SE	8.7E-09	0.	8.7E-09	8.7E-09	0.
SSE	1.2E-08	0.	1.2E-08	1.2E-08	1.2E-08
S	4.7E-09	0.	0.	8.5E-09	9.6E-09
SSW	6.0E-09	0.	1.4E-08	1.4E-08	1.4E-08
SW	1.3E-08	0.	1.3E-08	1.3E-08	1.3E-08
WSW	9.0E-09	0.	1.8E-08	1.6E-08	1.6E-08
W	1.0E-08	0.	0.	1.0E-08	1.0E-08
WNW	5.3E-09	0.	0.	5.3E-09	5.3E-09
NW	6.5E-09	0.	0.	6.5E-09	6.5E-09
NNW	4.2E-09	0.	0.	4.2E-09	4.2E-09
N	4.5E-09	0.	0.	4.5E-09	4.5E-09

*A zero indicates that this point was not calculated.

TABLE A-14

Depleted χ/Q Values at the Special Locations for Releases From the Stack

Carolina Power & Light Company - Brunswick
Release Type: Annual
Release Mode: Elevated
Variable: Relative Depleted Concentrations
Calculation Points: Special
Model: Straight Line
Application of Terrain Correction Factors: Yes
Number of Observations: 8678

Accounting for Stack Center Offset

Affected Sector	Site Boundary	Dairy*	Meat*	Resident*	Garden*
NNE	1.2E-08	0.	2.2E-08	2.2E-08	2.2E-08
NE	2.5E-08	2.3E-08	0.	0.	0.
ENE	7.1E-09	0.	0.	0.	0.
E	3.6E-09	0.	7.6E-09	7.6E-09	0.
ESE	7.5E-09	0.	7.5E-09	1.2E-08	1.2E-08
SE	8.7E-09	0.	8.7E-09	8.7E-09	0.
SSE	1.2E-08	0.	1.2E-08	1.2E-08	1.2E-08
S	4.6E-09	0.	0.	8.5E-09	9.6E-09
SSW	6.0E-09	0.	1.4E-08	1.4E-08	1.4E-08
SW	1.3E-08	0.	1.3E-08	1.3E-08	1.3E-08
WSW	9.0E-09	0.	9.2E-08	1.5E-08	1.5E-08
W	1.0E-08	0.	0.	1.0E-08	1.0E-08
WNW	5.1E-09	0.	0.	5.1E-09	5.1E-09
NW	6.5E-09	0.	0.	6.5E-09	6.5E-09
NNW	4.1E-09	0.	0.	4.1E-09	4.1E-09
N	4.5E-09	0.	0.	4.5E-09	4.5E-09

*A zero indicates that this point was not calculated.

TABLE A-15

D/Q Values at the Special Locations for Releases from the Stack

Carolina Power & Light Company - Brunswick
Release Type: Annual
Release Mode: Elevated
Variable: Relative Deposition (Meter**-2)
Calculation Points: Special
Model: Straight Line
Application of Terrain Correction Factors: Yes
Number of Observations: 8678

Accounting for Stack Center Offset

Affected Sector	Site Boundary	Dairy*	Meat*	Resident*	Garden*
NNE	6.0E-10	0.	5.3E-10	5.3E-10	5.3E-10
NE	1.4E-09	2.2E-10	0.	0.	0.
ENE	3.2E-10	0.	0.	0.	0.
E	1.6E-10	0.	1.3E-10	1.3E-10	0.
ESE	4.1E-10	0.	4.1E-10	2.0E-10	2.0E-10
SE	4.2E-10	0.	4.2E-10	4.2E-10	0.
SSE	5.4E-10	0.	5.4E-10	5.4E-10	5.4E-10
S	2.0E-10	0.	0.	1.9E-10	1.4E-10
SSW	2.7E-10	0.	2.9E-10	2.9E-10	2.9E-10
SW	5.6E-10	0.	5.6E-10	5.6E-10	5.6E-10
WSW	3.8E-10	0.	3.0E-10	3.6E-10	3.6E-10
W	3.9E-10	0.	0.	3.9E-10	3.9E-10
WNW	1.7E-10	0.	0.	1.7E-10	1.7E-10
NW	2.0E-10	0.	0.	2.0E-10	2.0E-10
NNW	1.5E-10	0.	0.	1.5E-10	1.5E-10
N	1.9E-10	0.	0.	1.9E-10	1.9E-10

*A zero indicates that this point was not calculated.

TABLE A-16

χ/Q Values at the Standard Distances for Releases from the Stack

Carolina Power & Light Company - Brunswick
Release Type: Annual
Release Mode: Elevated
Variable: Relative Concentration (Sec./Cubic Meter)
Calculation Points: Standard
Model: Straight Line (ANNX009)
Application of Terrain Correction Factors: Yes
Number of Observations: 8678

Base Distance in Miles/Kilometers

Aftd Sect	Design Dist Mi	.25 .40	.75 1.21	1.25 2.01	1.75 2.82	2.25 3.62	2.75 4.42	3.25 5.23	3.75 6.03	4.25 6.84	4.75 7.64
NNE	0.	1.5E-09	1.3E-08	2.3E-08	2.5E-08	2.4E-08	2.1E-08	1.9E-08	1.7E-08	1.5E-08	1.4E-08
NE	0.	2.5E-09	2.5E-08	4.0E-08	4.4E-08	4.2E-08	3.8E-08	3.3E-08	3.0E-08	2.6E-08	2.4E-08
ENE	0.	8.7E-10	7.2E-09	1.6E-08	2.1E-08	2.2E-08	2.1E-08	2.0E-08	1.9E-08	1.8E-08	1.7E-08
E	0.	7.5E-10	3.6E-09	7.6E-09	8.9E-09	1.0E-08	9.3E-09	9.4E-09	8.1E-09	7.6E-09	7.5E-09
ESE	0.	1.1E-09	7.7E-09	1.1E-08	1.3E-08	1.3E-08	1.3E-08	1.1E-08	1.0E-08	9.3E-09	8.5E-09
SE	0.	1.6E-09	8.7E-09	1.1E-08	1.0E-08	9.1E-09	8.9E-09	8.0E-09	7.3E-09	6.5E-09	6.5E-09
SSE	0.	1.5E-09	1.2E-08	1.6E-08	1.6E-08	1.5E-08	1.3E-08	1.3E-08	1.1E-08	1.0E-08	8.9E-09
S	0.	7.7E-10	4.7E-09	8.5E-09	9.6E-09	9.7E-09	1.1E-08	9.4E-09	8.3E-09	7.7E-09	7.2E-09
SSW	0.	4.9E-10	6.0E-09	1.4E-08	1.6E-08	1.7E-08	1.4E-08	1.4E-08	1.2E-08	1.1E-08	1.0E-08
SW	0.	1.5E-09	1.3E-08	1.8E-08	1.8E-08	1.8E-08	1.6E-08	1.4E-08	1.3E-08	1.1E-08	1.0E-08
WSW	0.	1.5E-09	9.0E-09	1.6E-08	1.8E-08	1.8E-08	1.6E-08	1.4E-08	1.4E-08	1.3E-08	1.2E-08
W	0.	1.4E-09	1.0E-08	1.5E-08	1.7E-08	1.6E-08	1.5E-08	1.4E-08	1.2E-08	1.2E-08	1.1E-08
WNW	0.	8.4E-10	5.3E-09	8.4E-09	1.1E-08	1.2E-08	1.0E-08	9.3E-09	8.6E-09	7.3E-09	6.7E-09
NW	0.	1.0E-09	6.5E-09	1.0E-08	1.0E-08	1.0E-08	1.0E-08	9.5E-09	8.6E-09	7.6E-09	7.5E-09
NNW	0.	1.1E-09	4.2E-09	7.6E-09	9.2E-09	8.5E-09	8.0E-09	7.4E-09	7.0E-09	6.9E-09	6.1E-09
N	0.	8.1E-10	4.5E-09	8.4E-09	1.1E-08	1.2E-08	1.3E-08	1.3E-08	1.1E-08	9.3E-09	9.2E-09

Number of Valid Observations	8678
Number of Invalid Observations	82
Number of Calms Lower Level	0
Number of Calms Upper Level	0

TABLE A-17

Depleted χ/Q Values at the Standard Distances for Releases from the Stack

Carolina Power & Light Company - Brunswick
Release Type: Annual
Release Mode: Elevated
Variable: Relative Depleted Concentration (Sec./Cubic Meter)
Calculation Points: Standard
Model: Straight Line (ANNX009)
Application of Terrain Correction Factors: Yes
Number of Observations: 8678

Base Distance in Miles/Kilometers

Aftd Sect	Design Dist Mi	.25 .40	.75 1.21	1.25 2.01	1.75 2.82	2.25 3.62	2.75 4.42	3.25 5.23	3.75 6.03	4.25 6.84	4.75 7.64
NNE	0.	1.5E-09	1.2E-08	2.2E-08	2.4E-08	2.4E-08	2.1E-08	1.9E-08	1.7E-08	1.5E-08	1.4E-08
NE	0.	2.5E-09	2.5E-08	4.0E-08	4.3E-08	4.1E-08	3.7E-08	3.2E-08	2.9E-08	2.5E-08	2.3E-08
ENE	0.	8.7E-10	7.1E-09	1.6E-08	2.1E-08	2.2E-08	2.0E-08	1.9E-08	1.8E-08	1.7E-08	1.7E-08
E	0.	7.5E-10	3.6E-09	7.6E-09	8.9E-09	9.3E-09	9.3E-09	9.4E-09	8.1E-09	7.6E-09	6.8E-09
ESE	0.	1.1E-09	7.5E-09	1.1E-08	1.2E-08	1.3E-08	1.3E-08	1.1E-08	1.0E-08	9.3E-09	8.2E-09
SE	0.	1.6E-09	8.7E-09	1.1E-08	1.0E-08	8.5E-09	8.2E-09	8.0E-09	7.2E-09	6.3E-09	6.3E-09
SSE	0.	1.5E-09	1.2E-08	1.6E-08	1.5E-08	1.4E-08	1.3E-08	1.2E-08	1.0E-08	9.3E-09	8.1E-09
S	0.	7.7E-10	4.6E-09	8.5E-09	9.6E-09	9.7E-09	1.1E-08	9.4E-09	8.2E-09	7.4E-09	6.9E-09
SSW	0.	4.9E-10	6.0E-09	1.4E-08	1.6E-08	1.6E-08	1.4E-08	1.4E-08	1.1E-08	1.0E-08	9.3E-09
SW	0.	1.5E-09	1.3E-08	1.8E-08	1.0E-08	1.8E-08	1.5E-08	1.4E-08	1.2E-08	1.1E-08	1.0E-08
WSW	0.	1.5E-09	9.0E-09	1.5E-08	9.2E-08	1.7E-08	1.5E-08	1.3E-08	1.4E-08	1.2E-08	1.1E-08
W	0.	1.4E-09	1.0E-08	1.5E-08	1.1E-08	1.5E-08	1.5E-08	1.4E-08	1.2E-08	1.2E-08	1.1E-08
WNW	0.	8.4E-10	5.1E-09	8.4E-09	1.1E-08	1.2E-08	1.0E-08	9.3E-09	8.6E-09	7.3E-09	6.5E-09
NW	0.	1.0E-09	6.5E-09	1.0E-08	1.0E-08	9.6E-09	1.0E-08	8.7E-09	7.8E-09	7.3E-09	7.1E-09
NNW	0.	1.1E-09	4.1E-09	7.5E-09	9.2E-09	8.5E-09	8.0E-09	7.3E-09	6.8E-09	6.6E-09	6.0E-09
N	0.	8.1E-10	4.5E-09	8.4E-09	1.1E-08	1.1E-08	1.3E-08	1.3E-08	1.0E-08	9.3E-09	9.2E-09

Number of Valid Observations	8678
Number of Invalid Observations	82
Number of Calms Lower Level	0
Number of Calms Upper Level	0

TABLE A-18

D/Q Values at the Standard Distances for Releases from the Stack

Carolina Power & Light Company - Brunswick
Release Type: Annual
Release Mode: Elevated
Variable: Relative Deposition (Meter**-2)
Calculation Points: Standard
Model: Straight Line (ANNX009)
Application of Terrain Correction Factors: Yes
Number of Observations: 8678

Base Distance in Miles/Kilometers

Aftd Sect	Design Dist Mi	.25 .40	.75 1.21	1.25 2.01	1.75 2.82	2.25 3.62	2.75 4.42	3.25 5.23	3.75 6.03	4.25 6.84	4.75 7.64
NNE	0.	1.2E-09	6.0E-10	5.3E-10	4.3E-10	3.4E-10	2.5E-10	2.0E-10	1.6E-10	1.4E-10	1.2E-10
NE	0.	1.4E-09	1.4E-09	1.1E-09	8.8E-10	6.7E-10	5.2E-10	3.9E-10	3.1E-10	2.6E-10	2.2E-10
ENE	0.	1.8E-09	3.2E-10	3.0E-10	2.5E-10	2.0E-10	1.6E-10	1.3E-10	1.1E-10	9.3E-11	8.1E-11
E	0.	2.2E-10	1.6E-10	1.3E-10	1.0E-10	8.7E-11	6.6E-11	5.7E-11	4.4E-11	3.7E-11	3.1E-11
ESE	0.	1.9E-10	4.1E-10	2.7E-10	2.0E-10	1.7E-10	1.4E-10	1.1E-10	8.2E-11	6.6E-11	5.6E-11
SE	0.	3.2E-10	4.2E-10	3.1E-10	2.1E-10	1.4E-10	1.1E-10	8.7E-11	7.3E-11	5.8E-11	5.3E-11
SSE	0.	5.8E-10	5.4E-10	3.9E-10	2.8E-10	2.1E-10	1.7E-10	1.4E-10	1.1E-10	8.5E-11	7.1E-11
S	0.	5.4E-10	2.0E-10	1.9E-10	1.4E-10	1.1E-10	1.1E-10	8.3E-11	6.6E-11	5.5E-11	4.6E-11
SSW	0.	1.1E-09	2.7E-10	2.9E-10	2.4E-10	1.9E-10	1.4E-10	1.3E-10	9.5E-11	7.9E-11	6.5E-11
SW	0.	7.6E-10	5.6E-10	4.3E-10	3.1E-10	2.4E-10	1.8E-10	1.4E-10	1.1E-10	9.5E-11	8.0E-11
WSW	0.	4.1E-10	3.8E-10	3.6E-10	3.0E-10	2.3E-10	1.7E-10	1.4E-10	1.3E-10	1.0E-10	8.6E-11
W	0.	2.8E-10	3.9E-10	3.0E-10	2.1E-10	1.5E-10	1.3E-10	1.0E-10	7.8E-11	6.9E-11	5.9E-11
WNW	0.	2.4E-10	1.7E-10	1.5E-10	1.4E-10	1.0E-10	7.4E-11	5.8E-11	4.8E-11	3.7E-11	2.9E-11
NW	0.	2.6E-10	2.0E-10	1.7E-10	1.2E-10	8.8E-11	7.5E-11	6.0E-11	4.8E-11	4.0E-11	3.6E-11
NNW	0.	7.2E-10	1.5E-10	1.3E-10	1.0E-10	7.3E-11	5.4E-11	4.3E-11	3.6E-11	3.2E-11	2.6E-11
N	0.	8.1E-10	1.9E-10	1.5E-10	1.3E-10	1.1E-10	9.9E-11	7.9E-11	6.0E-11	4.9E-11	4.4E-11

Number of Valid Observations 8678
Number of Invalid Observations 82
Number of Calms Lower Level 0
Number of Calms Upper Level 0

TABLE A-19

Brunswick Plant Site Information To Be Used
for Ground Level Calculations with NRC "XOQDOQ" Program

Card Type	Columns	Description	Value to be Used in XOQDOQ
1	1	Print input data	1
	38	Calculate annual χ/Qs for points of interest	1
	39	Calculate annual χ/Q averages for site radial segments	1
	41	Print out set distance χ/Qs and D/Qs	1
	55	Calculate annual D/Q averages for the set radial segments	1
	56	Allow depleted χ/Qs (if Decays (1), (2), or (3) are negative)	1
	58	Calculate annual D/Qs for points of interest	1
2	1-80	Title card	N/A
3	1-5	Number of wind velocity categories	7
	6-10	Number of stability categories	7
	11-15	Number of distances within terrain data for each sector	1
	16-20	Total number of hours in joint wind frequency distribution	*
	21-25	Increment in % for which plotted results are to be printed	5
	26-30	Number of titles of receptor types	
	31-35	Number of release exit locations	1
4	1-5	Height of the measured wind	11
	6-20	Half-life (days) used in the χ/Q calculations	101.00 2.26 8.00

*Appropriate data to be supplied.

TABLE A-19 (Cont'd)

Card Type	Columns	Description	Value to be Used in XOQDOQ
5	N/A	N/A	
6	1-80	Joint wind frequency distribution	*
7	1-5	Wind velocity units correction	200.00
	6-75	Maximum wind speed in each wind class (m/sec)	0.75 3.50 7.50 12.50 18.50 25.00 26.00
8	1-80	Distance in meters at which terrain heights are given	All are 100
9	1-80	Terrain heights (in meters, above plant grade) correspond to distances in Card Type 8	All are 0
10	1-25	Number of receptor locations for a particular receptor type	
		Site Boundary	16
		Dairy	1
		Meat	5
		Residence	14
		Garden	11
11	1-16	Title of receptor type for receptor locations	Site Boundary
			Dairy
			Meat
			Residence

*Appropriate data to be supplied.

TABLE A-19 (Cont'd)

Card Type	Columns	Description	Value to be Used in XOQDOQ
	1-16 Cont'd	Title of receptor type for receptor locations (Cont'd)	Garden
12	1-80	Receptor direction and distance	(See Table 1)
13	1-80	Title for release point whose characteristics are described on Card Type 14	*
14	1-5	Vent average velocity (m/sec)	1.0
	6-10	Vent inside diameter (m)	1.0
	11-15	Height of vent release point (m)	0.000
	16-20	Height of the vent's building (m)	56.9
	21-25	Minimum cross-sectional area for the vent's building (m^2)	2120.0
	26-30	Wind height used for vent elevated release	11.0
	31-35	Vent heat emission rate (cal/sec)	0.0
15	1	Identification for release point	A
	2-5	Intermittent releases	0
	6-10	Number of intermittent releases per year for this release point	0
	11-15	Average number of hours per intermittent release	0

*Appropriate data to be supplied.

TABLE A-20

Brunswick Plant Site Information To Be Used
for Elevated Release Calculations with NRC "XOQDOQ" Program

Card Type	Columns	Description	Value to Be Used in XOQDOQ
1	1	Print input data	1
	4	Release to be elevated 100% of the time	1
	38	Calculate annual χ/Qs for points of interest	1
	39	Calculate annual χ/Q averages for site radial segments	1
	41	Print out set distance χ/Qs and D/Qs	1
	55	Calculate annual D/Q averages for the set radial segments	1
	56	Allow depleted χ/Qs (if Decays (1), (2), or (3) are negative)	1
	58	Calculate annual D/Qs for points of interest	1
2	1-80	Title card	N/A
3	1-5	Number of wind velocity categories	7
	6-10	Number of stability categories	7
	11-15	Number of distances within terrain data for each sector	1
	16-20	Total number of hours in joint wind frequency distribution	*
	21-25	Increment in % for which plotted results are to be printed	5
	26-30	Number of titles of receptor types	5
	31-35	Number of release exit locations	1
4	1-5	Height of the measured wind	104
	6-20	Half-life (days) used in the χ/Q calculations	101.00 2.26

*Appropriate data to be supplied.

TABLE A-20 (Cont'd)

Card Type	Columns	Description	Value to Be Used in XOQDOQ
	6-20 (Cont'd)	Half-life (days) used in the χ/Q calculations (Cont'd)	8.00
5	N/A	N/A	
6	1-80	Joint wind frequency distribution	*
7	1-5	Wind velocity units correction	200.00
	6-75	Maximum wind speed in each wind class (m/sec)	0.75
			3.50
			7.50
			12.50
			18.50
			25.00
			26.00
8	1-80	Distance in meters at which terrain heights are given	All are 100
9	1-80	Terrain heights (in meters, above plant grade) correspond to distances in Card Type 8	All are 0
10	1-25	Number of receptor locations for a particular receptor type	
		Site Boundary	16
		Dairy	1
		Meat	5
		Residence	14
		Garden	11

*Appropriate data to be supplied.

TABLE A-20 (Cont'd)

Card Type	Columns	Description	Value to Be Used in XOQDOQ
11	1-16	Title of receptor type for receptor locations	Site Boundary
			Dairy
			Meat
			Residence
			Garden
12	1-80	Receptor direction and distance (See Table 1)	
13	1-80	Title for release point whose characteristics are described on Card Type 14	*
14	1-5	Vent average velocity (m/sec)	4.66
	6-10	Vent inside diameter (m)	3.58
	11-15	Height of vent release point (m)	100.9
	16-20	Height of the vent's building (m)	0.0
	21-25	Minimum cross-sectional area for the vent's building (m^2)	0.00
	26-30	Wind height used for vent elevated release	104.0
	31-35	Vent heat emission rate (cal/sec)	0.0
15	1	Identification for release point	A
	2-5	Intermittent releases	0
	6-10	Number of intermittent releases per year for this release point	0
	11-15	Average number of hours per intermittent release	0

*Appropriate data to be supplied.

LIST OF TABLES

Table No.	Title	Page
APPENDIX B		
B-1	DOSE PARAMETERS FOR FINITE ELEVATED PLUMES ENE SITE BOUNDARY	B-5
B-2	JOINT FREQUENCY DISTRIBUTION FOR ENE SECTOR (%) PERIOD 1-1-77 THROUGH 12-31-77, BRUNSWICK STEAM ELECTRIC PLANT	B-6
B-3	DOSE PARAMETERS FOR FINITE ELEVATED PLUMES N SITE BOUNDARY	B-7
B-4	JOINT FREQUENCY DISTRIBUTION FOR N SECTOR (%) PERIOD 1-1-77 THROUGH 12-31-77, BRUNSWICK STEAM ELECTRIC PLANT	B-8
B-5	DOSE PARAMETERS FOR FINITE ELEVATED PLUMES NNE SITE BOUNDARY	B-9
B-6	JOINT FREQUENCY DISTRIBUTION FOR NNE SECTOR (%) PERIOD 1-1-77 THROUGH 12-31-77, BRUNSWICK STEAM ELECTRIC PLANT	B-10
B-7	DOSE PARAMETERS FOR FINITE ELEVATED PLUMES NE SITE BOUNDARY	B-11
B-8	JOINT FREQUENCY DISTRIBUTION FOR NE SECTOR (%) PERIOD 1-1-77 THROUGH 12-31-77, BRUNSWICK STEAM ELECTRIC PLANT	B-12
B-9	DOSE PARAMETERS FOR FINITE ELEVATED PLUMES E SITE BOUNDARY	B-13
B-10	JOINT FREQUENCY DISTRIBUTION FOR E SECTOR (%) PERIOD 1-1-77 THROUGH 12-31-77, BRUNSWICK STEAM ELECTRIC PLANT	B-14
B-11	DOSE PARAMETERS FOR FINITE ELEVATED PLUMES ESE SITE BOUNDARY	B-15
B-12	JOINT FREQUENCY DISTRIBUTION FOR ESE SECTOR (%) PERIOD 1-1-77 THROUGH 12-31-77, BRUNSWICK STEAM ELECTRIC PLANT	B-16

LIST OF TABLES (Cont'd)

Table No.	Title	Page
APPENDIX B (continued)		
B-13	DOSE PARAMETERS FOR FINITE ELEVATED PLUMES SE SITE BOUNDARY	B-17
B-14	JOINT FREQUENCY DISTRIBUTION FOR SE SECTOR (%) PERIOD 1-1-77 THROUGH 12-31-77, BRUNSWICK STEAM ELECTRIC PLANT	B-18
B-15	DOSE PARAMETERS FOR FINITE ELEVATED PLUMES SSE SITE BOUNDARY	B-19
B-16	JOINT FREQUENCY DISTRIBUTION FOR SSE SECTOR (%) PERIOD 1-1-77 THROUGH 12-31-77, BRUNSWICK STEAM ELECTRIC PLANT	B-20
B-17	DOSE PARAMETERS FOR FINITE ELEVATED PLUMES S SITE BOUNDARY	B-21
B-18	JOINT FREQUENCY DISTRIBUTION FOR S SECTOR (%) PERIOD 1-1-77 THROUGH 12-31-77, BRUNSWICK STEAM ELECTRIC PLANT	B-22
B-19	DOSE PARAMETERS FOR FINITE ELEVATED PLUMES SSW SITE BOUNDARY	B-23
B-20	JOINT FREQUENCY DISTRIBUTION FOR SSW SECTOR (%) PERIOD 1-1-77 THROUGH 12-31-77, BRUNSWICK STEAM ELECTRIC PLANT	B-24
B-21	DOSE PARAMETERS FOR FINITE ELEVATED PLUMES SW SITE BOUNDARY	B-25
B-22	JOINT FREQUENCY DISTRIBUTION FOR SW SECTOR (%) PERIOD 1-1-77 THROUGH 12-31-77, BRUNSWICK STEAM ELECTRIC PLANT	B-26
B-23	DOSE PARAMETERS FOR FINITE ELEVATED PLUMES WSW SITE BOUNDARY	B-27
B-24	JOINT FREQUENCY DISTRIBUTION FOR WSW SECTOR (%) PERIOD 1-1-77 THROUGH 12-31-77, BRUNSWICK STEAM ELECTRIC PLANT	B-28

LIST OF TABLES (Cont'd)

Table No.	Title	Page
APPENDIX B (continued)		
B-25	DOSE PARAMETERS FOR FINITE ELEVATED PLUMES W SITE BOUNDARY	B-29
B-26	JOINT FREQUENCY DISTRIBUTION FOR W SECTOR (%) PERIOD 1-1-77 THROUGH 12-31-77, BRUNSWICK STEAM ELECTRIC PLANT	B-30
B-27	DOSE PARAMETERS FOR FINITE ELEVATED PLUMES WNW SITE BOUNDARY	B-31
B-28	JOINT FREQUENCY DISTRIBUTION FOR WNW SECTOR (%) PERIOD 1-1-77 THROUGH 12-31-77, BRUNSWICK STEAM ELECTRIC PLANT	B-32
B-29	DOSE PARAMETERS FOR FINITE ELEVATED PLUMES NW SITE BOUNDARY	B-33
B-30	JOINT FREQUENCY DISTRIBUTION FOR NW SECTOR (%) PERIOD 1-1-77 THROUGH 12-31-77, BRUNSWICK STEAM ELECTRIC PLANT	B-34
B-31	DOSE PARAMETERS FOR FINITE ELEVATED PLUMES NNW SITE BOUNDARY	B-35
B-32	JOINT FREQUENCY DISTRIBUTION FOR NNW SECTOR (%) PERIOD 1-1-77 THROUGH 12-31-77, BRUNSWICK STEAM ELECTRIC PLANT	B-36

APPENDIX B

Calculation of V_i and B_i Values for the Elevated Plume

Values of V_i and B_i were calculated for the elevated plume release from the Brunswick stack using the NRC computer program RABFIN. This program was used to determine the controlling location based upon the releases of Table 3.2-1. In addition it was used to develop the V_i and B_i values for the various noble gas radionuclides at the site boundary at each of the 16 sectors. Table B-7 presents the V_i and B_i values for the NE sector which is the controlling location for noble gases for showing compliance with 10CFR20 and 10CFR50. Table B-8 presents the joint frequency distribution for the NE sector. Tables B-1 through B-6 and B-9 through B-32 present the V_i and B_i values and the joint frequency distribution for the remaining sectors. The inputs which were utilized in the RABFIN code are presented below.

1. Height of Stack - 100.9 (m)
2. Stack Diameter - 3.6 (m)
3. Exit Velocity - 5.0 m/sec
4. Wind Height - 104.6 (m)

TABLE B-1

DOSE PARAMETERS FOR FINITE ELEVATED PLUMES
ENE SITE BOUNDARY*

Noble Gas Radionuclides	V_i Total Body $\left(\frac{mrem/yr}{\mu Ci/sec}\right)$	B_i Gamma Air $\left(\frac{mrad/yr}{\mu Ci/sec}\right)$
Kr-83m	1.64E-09	1.42E-07
Kr-85m	9.03E-05	1.34E-04
Kr-85	1.34E-06	2.02E-06
Kr-87	4.10E-04	6.17E-04
Kr-88	1.06E-03	1.60E-03
Kr-89	6.41E-04	9.63E-04
Xe-131m	2.13E-05	3.35E-05
Xe-133m	1.61E-05	2.62E-05
Xe-133	1.69E-05	2.63E-05
Xe-135m	2.13E-04	3.23E-04
Xe-135	1.45E-04	2.17E-04
Xe-137	5.51E-05	8.33E-05
Xe-138	6.51E-04	9.77E-04
Xe-139	1.96E-05	2.94E-05
Ar-41	7.74E-04	1.16E-03

*The listed dose parameters are for radionuclides that may be detected in gaseous effluents.

TABLE B-2

JOINT FREQUENCY DISTRIBUTION FOR ENE SECTOR (%)
PERIOD 1-1-77 THROUGH 12-31-77
BRUNSWICK STEAM ELECTRIC PLANT

	MAXIMUM WIND SPEED (m/sec)						
Stability	Total	1.50	3.00	5.00	7.50	10.00	12.50
1	0.00	0.00	0.00	0.00	0.00	0.00	0.00
2	0.00	0.00	0.00	0.00	0.00	0.00	0.00
3	0.17	0.00	0.01	0.01	0.07	0.03	0.05
4	3.30	0.02	0.17	0.61	1.21	0.83	0.46
5	4.81	0.02	0.18	0.81	1.63	1.39	0.78
6	1.14	0.05	0.20	0.28	0.27	0.14	0.20
7	0.46	0.01	0.12	0.15	0.09	0.09	0.00
Total	9.88	0.10	0.68	1.86	3.27	2.48	1.49
Entrapment		0.00	0.00	0.00	0.00	0.00	0.00
Ground Velocity		0.23	0.70	1.24	1.93	2.71	3.48
Elevated Velocity		0.74	2.21	3.93	6.14	8.59	11.05

AVERAGE WIND SPEED (m/sec)			
Mean	Ground	Elevated	Combined
Arithmetic	0.00	6.75	6.75
Harmonic	0.00	5.27	5.27

TABLE B-3

DOSE PARAMETERS FOR FINITE ELEVATED PLUMES
N SITE BOUNDARY*

Noble Gas Radionuclides	V_i Total Body $\left(\frac{mrem/yr}{\mu Ci/sec}\right)$	B_i Gamma Air $\left(\frac{mrad/yr}{\mu Ci/sec}\right)$
Kr-83m	8.97E-10	1.26E-07
Kr-85m	4.38E-05	6.50E-05
Kr-85	6.45E-07	9.78E-07
Kr-87	1.96E-04	2.94E-04
Kr-88	5.16E-04	7.75E-04
Kr-89	2.67E-04	4.01E-04
Xe-131m	1.05E-05	1.66E-05
Xe-133m	7.95E-06	1.31E-05
Xe-133	8.40E-06	1.32E-05
Xe-135m	9.77E-05	1.48E-04
Xe-135	7.00E-05	1.05E-04
Xe-137	2.20E-05	3.33E-05
Xe-138	3.10E-04	4.65E-04
Xe-139	6.00E-06	9.01E-06
Ar-41	3.70E-04	5.56E-04

*The listed dose parameters are for radionuclides that may be detected in gaseous effluents.

TABLE B-4

JOINT FREQUENCY DISTRIBUTION FOR N SECTOR (%)
PERIOD 1-1-77 THROUGH 12-31-77
BRUNSWICK STEAM ELECTRIC PLANT

MAXIMUM WIND SPEED (m/sec)							
Stability	Total	1.50	3.00	5.00	7.50	10.00	12.50
1	0.00	0.00	0.00	0.00	0.00	0.00	0.00
2	0.01	0.00	0.00	0.00	0.01	0.00	0.00
3	0.11	0.00	0.00	0.01	0.07	0.03	0.00
4	1.79	0.01	0.16	0.70	0.65	0.18	0.09
5	2.00	0.00	0.15	0.46	0.65	0.29	0.45
6	0.68	0.02	0.06	0.29	0.12	0.07	0.12
7	0.15	0.02	0.10	0.01	0.00	0.01	0.01
Total	4.74	0.05	0.47	1.47	1.50	0.58	0.67
Entrapment		0.00	0.00	0.00	0.00	0.00	0.00
Ground Velocity		0.23	0.70	1.24	1.93	2.71	3.48
Elevated Velocity		0.74	2.21	3.93	6.14	8.59	11.05

AVERAGE WIND SPEED (m/sec)			
Mean	Ground	Elevated	Combined
Arithmetic	0.00	6.00	6.00
Harmonic	0.00	4.61	4.61

TABLE B-5

DOSE PARAMETERS FOR FINITE ELEVATED PLUMES
NNE SITE BOUNDARY*

Noble Gas Radionuclides	V_i Total Body $\left(\frac{mrem/yr}{\mu Ci/sec}\right)$	B_i Gamma Air $\left(\frac{mrad/yr}{\mu Ci/sec}\right)$
Kr-83m	1.78E-09	3.05E-07
Kr-85m	8.12E-05	1.21E-04
Kr-85	1.18E-06	1.79E-06
Kr-87	3.63E-04	5.46E-04
Kr-88	9.34E-04	1.40E-03
Kr-89	5.84E-04	8.77E-04
Xe-131m	1.96E-05	3.11E-05
Xe-133m	1.48E-05	2.44E-05
Xe-133	1.57E-05	2.48E-05
Xe-135m	1.91E-04	2.89E-04
Xe-135	1.29E-04	1.94E-04
Xe-137	5.09E-05	7.69E-05
Xe-138	5.76E-04	8.65E-04
Xe-139	1.93E-05	2.90E-05
Ar-41	6.82E-04	1.02E-03

*The listed dose parameters are for radionuclides that may be detected in gaseous effluents.

TABLE B-6

JOINT FREQUENCY DISTRIBUTION FOR NNE SECTOR (%)
PERIOD 1-1-77 THROUGH 12-31-77
BRUNSWICK STEAM ELECTRIC PLANT

MAXIMUM WIND SPEED (m/sec)							
Stability	Total	1.50	3.00	5.00	7.50	10.00	12.50
1	0.00	0.00	0.00	0.00	0.00	0.00	0.00
2	0.07	0.00	0.00	0.01	0.05	0.01	0.00
3	0.45	0.00	0.00	0.03	0.25	0.15	0.02
4	4.51	0.01	0.16	0.56	1.79	1.38	0.61
5	2.90	0.00	0.17	0.21	0.88	0.78	0.86
6	0.65	0.02	0.12	0.22	0.09	0.07	0.13
7	0.45	0.05	0.14	0.08	0.07	0.10	0.01
Total	9.03	0.08	0.59	1.11	3.13	2.49	1.63
Entrapment		0.00	0.00	0.00	0.00	0.00	0.00
Ground Velocity		0.23	0.70	1.24	1.93	2.71	3.48
Elevated Velocity		0.74	2.21	3.93	6.14	8.59	11.05

AVERAGE WIND SPEED (m/sec)			
Mean	Ground	Elevated	Combined
Arithmetic	0.00	7.13	7.13
Harmonic	0.00	5.63	5.63

TABLE B-7

DOSE PARAMETERS FOR FINITE ELEVATED PLUMES
NE SITE BOUNDARY*

Noble Gas Radionuclides	V_i Total Body $\left(\frac{mrem/yr}{\mu Ci/sec}\right)$	B_i Gamma Air $\left(\frac{mrad/yr}{\mu Ci/sec}\right)$
Kr-83m	2.93E-09	5.97E-07
Kr-85m	1.22E-04	1.81E-04
Kr-85	1.74E-06	2.64E-06
Kr-87	5.39E-04	8.11E-04
Kr-88	1.36E-03	2.05E-03
Kr-89	9.47E-04	1.42E-03
Xe-131m	2.96E-05	4.73E-05
Xe-133m	2.23E-05	3.72E-05
Xe-133	2.40E-05	3.80E-05
Xe-135m	2.94E-04	4.46E-04
Xe-135	1.92E-04	2.89E-04
Xe-137	8.47E-05	1.28E-04
Xe-138	8.60E-04	1.29E-03
Xe-139	3.57E-05	5.37E-05
Ar-41	1.01E-03	1.51E-03

*The listed dose parameters are for radionuclides that may be detected in gaseous effluents.

TABLE B-8

JOINT FREQUENCY DISTRIBUTION FOR NE SECTOR (%)
PERIOD 1-1-77 THROUGH 12-31-77
BRUNSWICK STEAM ELECTRIC PLANT

MAXIMUM WIND SPEED (m/sec)							
Stability	Total	1.50	3.00	5.00	7.50	10.00	12.50
1	0.02	0.00	0.00	0.00	0.01	0.00	0.01
2	0.21	0.00	0.00	0.00	0.05	0.10	0.06
3	1.13	0.00	0.00	0.03	0.28	0.50	0.32
4	7.30	0.01	0.15	0.63	2.50	2.51	1.50
5	5.15	0.03	0.09	0.30	1.21	1.99	1.53
6	1.04	0.01	0.06	0.32	0.33	0.24	0.08
7	0.41	0.01	0.12	0.10	0.13	0.03	0.02
Total	15.26	0.06	0.42	1.38	4.51	5.37	3.52
Entrapment		0.00	0.00	0.00	0.00	0.00	0.00
Ground Velocity		0.23	0.70	1.24	1.93	2.71	3.48
Elevated Velocity		0.74	2.21	3.93	6.14	8.59	11.05

AVERAGE WIND SPEED (m/sec)			
Mean	Ground	Elevated	Combined
Arithmetic	0.00	7.81	7.81
Harmonic	0.00	6.63	6.63

TABLE B-9

DOSE PARAMETERS FOR FINITE ELEVATED PLUMES
E SITE BOUNDARY*

Noble Gas Radionuclides	V_i Total Body $\left(\frac{mrem/yr}{\mu Ci/sec}\right)$	B_i Gamma Air $\left(\frac{mrad/yr}{\mu Ci/sec}\right)$
Kr-83m	9.82E-10	6.10E-08
Kr-85m	6.43E-05	9.54E-05
Kr-85	9.71E-07	1.47E-06
Kr-87	2.99E-04	4.49E-04
Kr-88	7.78E-04	1.17E-03
Kr-89	4.59E-04	6.90E-04
Xe-131m	1.49E-05	2.33E-05
Xe-133m	1.13E-05	1.82E-05
Xe-133	1.16E-05	1.80E-05
Xe-135m	1.53E-04	2.32E-04
Xe-135	1.04E-04	1.56E-04
Xe-137	3.89E-05	5.89E-05
Xe-138	4.73E-04	7.10E-04
Xe-139	1.37E-05	2.05E-05
Ar-41	5.66E-04	8.49E-04

*The listed dose parameters are for radionuclides that may be detected in gaseous effluents.

TABLE B-10

JOINT FREQUENCY DISTRIBUTION FOR E SECTOR (%)
PERIOD 1-1-77 THROUGH 12-31-77
BRUNSWICK STEAM ELECTRIC PLANT

MAXIMUM WIND SPEED (m/sec)							
Stability	Total	1.50	3.00	5.00	7.50	10.00	12.50
1	0.01	0.00	0.00	0.00	0.00	0.01	0.00
2	0.03	0.00	0.00	0.00	0.01	0.01	0.01
3	0.09	0.00	0.00	0.03	0.02	0.01	0.03
4	1.42	0.01	0.15	0.55	0.32	0.23	0.16
5	2.07	0.03	0.10	0.62	0.74	0.50	0.08
6	1.08	0.02	0.14	0.30	0.38	0.15	0.09
7	0.64	0.03	0.13	0.24	0.10	0.08	0.06
Total	5.34	0.09	0.52	1.74	1.57	0.99	0.43
Entrapment		0.00	0.00	0.00	0.00	0.00	0.00
Ground Velocity		0.23	0.70	1.24	1.93	2.71	3.48
Elevated Velocity		0.74	2.21	3.93	6.14	8.59	11.05

AVERAGE WIND SPEED (m/sec)			
Mean	Ground	Elevated	Combined
Arithmetic	0.00	5.80	5.80
Harmonic	0.00	4.41	4.41

TABLE B-11

DOSE PARAMETERS FOR FINITE ELEVATED PLUMES
ESE SITE BOUNDARY*

Noble Gas Radionuclides	V_i Total Body $\left(\frac{mrem/yr}{\mu Ci/sec}\right)$	B_i Gamma Air $\left(\frac{mrad/yr}{\mu Ci/sec}\right)$
Kr-83m	1.10E-09	1.90E-07
Kr-85m	5.59E-05	8.31E-05
Kr-85	8.23E-07	1.25E-06
Kr-87	2.55E-04	3.83E-04
Kr-88	6.50E-04	9.76E-04
Kr-89	4.38E-04	6.58E-04
Xe-131m	1.33E-05	2.10E-05
Xe-133m	1.01E-05	1.64E-05
Xe-133	1.05E-05	1.65E-05
Xe-135m	1.36E-04	2.07E-04
Xe-135	8.94E-05	1.34E-04
Xe-137	3.86E-05	5.84E-05
Xe-138	4.05E-04	6.08E-04
Xe-139	1.75E-05	2.63E-05
Ar-41	4.79E-04	7.19E-04

*The listed dose parameters are for radionuclides that may be detected in gaseous effluents.

TABLE B-12

JOINT FREQUENCY DISTRIBUTION FOR ESE SECTOR (%)
PERIOD 1-1-77 THROUGH 12-31-77
BRUNSWICK STEAM ELECTRIC PLANT

MAXIMUM WIND SPEED (m/sec)							
Stability	Total	1.50	3.00	5.00	7.50	10.00	12.50
1	0.06	0.00	0.00	0.01	0.00	0.05	0.00
2	0.15	0.00	0.00	0.01	0.03	0.06	0.05
3	0.31	0.00	0.00	0.02	0.13	0.03	0.13
4	1.71	0.00	0.07	0.31	0.58	0.46	0.29
5	2.02	0.01	0.08	0.31	0.52	0.80	0.30
6	0.85	0.03	0.06	0.17	0.18	0.36	0.05
7	0.46	0.01	0.07	0.12	0.07	0.07	0.12
Total	5.56	0.05	0.28	0.95	1.51	1.83	0.94
Entrapment		0.00	0.00	0.00	0.00	0.00	0.00
Ground Velocity		0.23	0.70	1.24	1.93	2.71	3.48
Elevated Velocity		0.74	2.21	3.93	6.14	8.59	11.05

AVERAGE WIND SPEED (m/sec)			
Mean	Ground	Elevated	Combined
Arithmetic	0.00	7.15	7.15
Harmonic	0.00	5.67	5.67

TABLE B-13

DOSE PARAMETERS FOR FINITE ELEVATED PLUMES
SE SITE BOUNDARY*

Noble Gas Radionuclides	V_i Total Body $\left(\frac{mrem/yr}{\mu Ci/sec}\right)$	B_i Gamma Air $\left(\frac{mrad/yr}{\mu Ci/sec}\right)$
Kr-83m	1.34E-09	3.71E-07
Kr-85m	5.76E-05	8.56E-05
Kr-85	8.42E-07	1.28E-06
Kr-87	2.60E-04	3.91E-04
Kr-88	6.65E-04	9.98E-04
Kr-89	4.39E-04	6.59E-04
Xe-131m	1.40E-05	2.23E-05
Xe-133m	1.06E-05	1.76E-05
Xe-133	1.12E-05	1.77E-05
Xe-135m	1.39E-04	2.10E-04
Xe-135	9.18E-05	1.38E-04
Xe-137	3.86E-05	5.84E-05
Xe-138	4.13E-04	6.21E-04
Xe-139	1.65E-05	2.48E-05
Ar-41	4.89E-04	7.34E-04

*The listed dose parameters are for radionuclides that may be detected in gaseous effluents.

TABLE B-14

JOINT FREQUENCY DISTRIBUTION FOR SE SECTOR (%)
PERIOD 1-1-77 THROUGH 12-31-77
BRUNSWICK STEAM ELECTRIC PLANT

MAXIMUM WIND SPEED (m/sec)							
Stability	Total	1.50	3.00	5.00	7.50	10.00	12.50
1	0.11	0.00	0.00	0.00	0.00	0.06	0.05
2	0.31	0.00	0.00	0.01	0.14	0.15	0.01
3	0.53	0.00	0.00	0.14	0.18	0.18	0.03
4	1.44	0.02	0.08	0.25	0.51	0.41	0.17
5	1.46	0.01	0.09	0.31	0.50	0.46	0.09
6	0.89	0.02	0.05	0.02	0.30	0.44	0.06
7	0.63	0.01	0.13	0.09	0.14	0.21	0.05
Total	5.37	0.06	0.35	0.82	1.77	1.91	0.46
Entrapment		0.00	0.00	0.00	0.00	0.00	0.00
Ground Velocity		0.23	0.70	1.24	1.93	2.71	3.48
Elevated Velocity		0.74	2.21	3.93	6.14	8.59	11.05

AVERAGE WIND SPEED (m/sec)			
Mean	Ground	Elevated	Combined
Arithmetic	0.00	6.78	6.78
Harmonic	0.00	5.37	5.37

TABLE B-15

DOSE PARAMETERS FOR FINITE ELEVATED PLUMES
SSE SITE BOUNDARY*

Noble Gas Radionuclides	V_i Total Body $\left(\frac{mrem/yr}{\mu Ci/sec}\right)$	B_i Gamma Air $\left(\frac{mrad/yr}{\mu Ci/sec}\right)$
Kr-83m	1.29E-09	2.74E-07
Kr-85m	5.96E-05	8.85E-05
Kr-85	8.78E-07	1.33E-06
Kr-87	2.70E-04	4.07E-04
Kr-88	6.97E-04	1.05E-03
Kr-89	4.51E-04	6.78E-04
Xe-131m	1.43E-05	2.27E-05
Xe-133m	1.09E-05	1.79E-05
Xe-133	1.14E-05	1.80E-05
Xe-135m	1.43E-04	2.17E-04
Xe-135	9.53E-05	1.43E-04
Xe-137	3.96E-05	5.99E-05
Xe-138	4.30E-04	6.45E-04
Xe-139	1.71E-05	2.57E-05
Ar-41	5.10E-04	7.65E-04

*The listed dose parameters are for radionuclides that may be detected in gaseous effluents.

TABLE B-16

JOINT FREQUENCY DISTRIBUTION FOR SSE SECTOR (%)
PERIOD 1-1-77 THROUGH 12-31-77
BRUNSWICK STEAM ELECTRIC PLANT

MAXIMUM WIND SPEED (m/sec)							
Stability	Total	1.50	3.00	5.00	7.50	10.00	12.50
1	0.02	0.00	0.00	0.00	0.01	0.01	0.00
2	0.13	0.00	0.00	0.02	0.02	0.09	0.00
3	0.49	0.00	0.00	0.14	0.24	0.09	0.02
4	2.35	0.05	0.16	0.32	0.80	0.70	0.32
5	1.40	0.00	0.08	0.23	0.46	0.58	0.05
6	0.84	0.02	0.05	0.13	0.18	0.31	0.15
7	0.32	0.03	0.02	0.05	0.07	0.13	0.02
Total	5.55	0.10	0.31	0.89	1.78	1.91	0.56
Entrapment		0.00	0.00	0.00	0.00	0.00	0.00
Ground Velocity		0.23	0.70	1.24	1.93	2.71	3.48
Elevated Velocity		0.74	2.21	3.93	6.14	8.59	11.05

AVERAGE WIND SPEED (m/sec)			
Mean	Ground	Elevated	Combined
Arithmetic	0.00	6.81	6.81
Harmonic	0.00	5.21	5.21

TABLE B-17

DOSE PARAMETERS FOR FINITE ELEVATED PLUMES
S SITE BOUNDARY*

Noble Gas Radionuclides	V_i Total Body $\left(\frac{mrem/yr}{\mu Ci/sec}\right)$	B_i Gamma Air $\left(\frac{mrad/yr}{\mu Ci/sec}\right)$
Kr-83m	8.80E-10	9.50E-08
Kr-85m	5.11E-05	7.59E-05
Kr-85	7.66E-07	1.16E-06
Kr-87	2.34E-04	3.53E-04
Kr-88	6.13E-04	9.19E-04
Kr-89	3.71E-04	5.57E-04
Xe-131m	1.20E-05	1.88E-05
Xe-133m	9.10E-06	1.48E-05
Xe-133	9.44E-06	1.47E-05
Xe-135m	1.20E-04	1.82E-04
Xe-135	8.23E-05	1.24E-04
Xe-137	3.19E-05	4.83E-05
Xe-138	3.71E-04	5.56E-04
Xe-139	1.33E-05	2.00E-05
Ar-41	4.44E-04	6.66E-04

*The listed dose parameters are for radionuclides that may be detected in gaseous effluents.

TABLE B-18

JOINT FREQUENCY DISTRIBUTION FOR S SECTOR (%)
PERIOD 1-1-77 THROUGH 12-31-77
BRUNSWICK STEAM ELECTRIC PLANT

MAXIMUM WIND SPEED (m/sec)							
Stability	Total	1.50	3.00	5.00	7.50	10.00	12.50
1	0.00	0.00	0.00	0.00	0.00	0.00	0.00
2	0.03	0.00	0.00	0.00	0.03	0.00	0.00
3	0.16	0.00	0.00	0.02	0.14	0.00	0.00
4	1.74	0.01	0.13	0.28	0.55	0.54	0.23
5	1.32	0.03	0.08	0.25	0.45	0.46	0.05
6	0.93	0.02	0.08	0.17	0.24	0.33	0.09
7	0.37	0.05	0.03	0.05	0.12	0.07	0.05
Total	4.55	0.11	0.32	0.77	1.53	1.40	0.42
Entrapment		0.00	0.00	0.00	0.00	0.00	0.00
Ground Velocity		0.23	0.70	1.24	1.93	2.71	3.48
Elevated Velocity		0.74	2.21	3.93	6.14	8.59	11.05

AVERAGE WIND SPEED (m/sec)			
Mean	Ground	Elevated	Combined
Arithmetic	0.00	6.57	6.57
Harmonic	0.00	4.84	4.84

TABLE B-19

DOSE PARAMETERS FOR FINITE ELEVATED PLUMES
SSW SITE BOUNDARY*

Noble Gas Radionuclides	V_i Total Body $\left(\frac{mrem/yr}{\mu Ci/sec}\right)$	B_i Gamma Air $\left(\frac{mrad/yr}{\mu Ci/sec}\right)$
Kr-83m	1.10E-09	1.39E-07
Kr-85m	5.60E-05	8.31E-05
Kr-85	8.22E-07	1.25E-06
Kr-87	2.53E-04	3.81E-04
Kr-88	6.51E-04	9.76E-04
Kr-89	4.06E-04	6.10E-04
Xe-131m	1.33E-05	2.10E-05
Xe-133m	1.01E-05	1.65E-05
Xe-133	1.06E-05	1.66E-05
Xe-135m	1.34E-04	2.03E-04
Xe-135	8.94E-05	1.34E-04
Xe-137	3.52E-05	5.32E-05
Xe-138	4.02E-04	6.04E-04
Xe-139	1.21E-05	1.81E-05
Ar-41	4.77E-04	7.15E-04

*The listed dose parameters are for radionuclides that may be detected in gaseous effluents.

TABLE B-20

JOINT FREQUENCY DISTRIBUTION FOR SSW SECTOR (%)
PERIOD 1-1-77 THROUGH 12-31-77
BRUNSWICK STEAM ELECTRIC PLANT

MAXIMUM WIND SPEED (m/sec)							
Stability	Total	1.50	3.00	5.00	7.50	10.00	12.50
1	0.00	0.00	0.00	0.00	0.00	0.00	0.00
2	0.00	0.00	0.00	0.00	0.00	0.00	0.00
3	0.19	0.00	0.00	0.07	0.05	0.06	0.01
4	2.47	0.01	0.03	0.53	0.99	0.62	0.29
5	1.88	0.01	0.15	0.37	0.56	0.74	0.05
6	1.12	0.01	0.12	0.14	0.28	0.55	0.02
7	0.51	0.01	0.03	0.10	0.22	0.13	0.02
Total	6.17	0.04	0.33	1.21	2.10	2.10	0.39
Entrapment		0.00	0.00	0.00	0.00	0.00	0.00
Ground Velocity		0.23	0.70	1.24	1.93	2.71	3.48
Elevated Velocity		0.74	2.21	3.93	6.14	8.59	11.05

AVERAGE WIND SPEED (m/sec)			
Mean	Ground	Elevated	Combined
Arithmetic	0.00	6.61	6.61
Harmonic	0.00	5.44	5.44

TABLE B-21

DOSE PARAMETERS FOR FINITE ELEVATED PLUMES
SW SITE BOUNDARY*

Noble Gas Radionuclides	V_i Total Body $\left(\frac{mrem/yr}{\mu Ci/sec}\right)$	B_i Gamma Air $\left(\frac{mrad/yr}{\mu Ci/sec}\right)$
Kr-83m	1.40E-09	3.22E-07
Kr-85m	6.11E-05	9.08E-05
Kr-85	8.94E-07	1.35E-06
Kr-87	2.73E-04	4.11E-04
Kr-88	7.10E-04	1.07E-03
Kr-89	4.19E-04	6.29E-04
Xe-131m	1.48E-05	2.36E-05
Xe-133m	1.12E-05	1.86E-05
Xe-133	1.19E-05	1.88E-05
Xe-135m	1.41E-04	2.14E-04
Xe-135	9.75E-05	1.47E-04
Xe-137	3.60E-05	5.44E-05
Xe-138	4.33E-04	6.50E-04
Xe-139	1.16E-05	1.74E-05
Ar-41	5.15E-04	7.73E-04

*The listed dose parameters are for radionuclides that may be detected in gaseous effluents.

TABLE B-22

JOINT FREQUENCY DISTRIBUTION FOR SW SECTOR (%)
PERIOD 1-1-77 THROUGH 12-31-77
BRUNSWICK STEAM ELECTRIC PLANT

MAXIMUM WIND SPEED (m/sec)							
Stability	Total	1.50	3.00	5.00	7.50	10.00	12.50
1	0.01	0.00	0.00	0.00	0.00	0.01	0.00
2	0.10	0.00	0.00	0.02	0.07	0.01	0.00
3	0.53	0.00	0.02	0.10	0.30	0.09	0.02
4	2.32	0.01	0.14	0.50	0.98	0.52	0.17
5	1.71	0.02	0.09	0.39	0.40	0.68	0.13
6	0.88	0.05	0.05	0.20	0.46	0.12	0.00
7	0.56	0.00	0.07	0.15	0.22	0.12	0.00
Total	6.11	0.08	0.37	1.36	2.43	1.55	0.32
Entrapment		0.00	0.00	0.00	0.00	0.00	0.00
Ground Velocity		0.23	0.70	1.24	1.93	2.71	3.48
Elevated Velocity		0.74	2.21	3.93	6.14	8.59	11.05

AVERAGE WIND SPEED (m/sec)			
Mean	Ground	Elevated	Combined
Arithmetic	0.00	6.22	6.22
Harmonic	0.00	4.98	4.98

TABLE B-23

DOSE PARAMETERS FOR FINITE ELEVATED PLUMES
WSW SITE BOUNDARY*

Noble Gas Radionuclides	V_i Total Body $\left(\frac{mrem/yr}{\mu Ci/sec}\right)$	B_i Gamma Air $\left(\frac{mrad/yr}{\mu Ci/sec}\right)$
Kr-83m	1.42E-09	3.10E-07
Kr-85m	6.27E-05	9.31E-05
Kr-85	9.16E-07	1.39E-06
Kr-87	2.80E-04	4.21E-04
Kr-88	7.26E-04	1.09E-03
Kr-89	4.28E-04	6.42E-04
Xe-131m	1.52E-05	2.42E-05
Xe-133m	1.15E-05	1.90E-05
Xe-133	1.22E-05	1.93E-05
Xe-135m	1.45E-04	2.20E-04
Xe-135	9.99E-05	1.50E-04
Xe-137	3.67E-05	5.55E-05
Xe-138	4.44E-04	6.67E-04
Xe-139	1.12E-05	1.68E-05
Ar-41	5.27E-04	7.91E-04

*The listed dose parameters are for radionuclides that may be detected in gaseous effluents.

TABLE B-24

JOINT FREQUENCY DISTRIBUTION FOR WSW SECTOR (%)
PERIOD 1-1-77 THROUGH 12-31-77
BRUNSWICK STEAM ELECTRIC PLANT

MAXIMUM WIND SPEED (m/sec)							
Stability	Total	1.50	3.00	5.00	7.50	10.00	12.50
1	0.02	0.00	0.00	0.00	0.02	0.00	0.00
2	0.18	0.00	0.01	0.00	0.14	0.00	0.03
3	0.36	0.00	0.01	0.15	0.15	0.05	0.00
4	2.64	0.00	0.15	0.54	1.12	0.75	0.08
5	1.73	0.02	0.09	0.37	0.84	0.39	0.02
6	0.87	0.02	0.08	0.25	0.37	0.14	0.01
7	0.36	0.03	0.03	0.13	0.17	0.00	0.00
Total	6.16	0.07	0.37	1.44	2.81	1.33	0.14
Entrapment		0.00	0.00	0.00	0.00	0.00	0.00
Ground Velocity		0.23	0.70	1.24	1.93	2.71	3.48
Elevated Velocity		0.74	2.21	3.93	6.14	8.59	11.05

AVERAGE WIND SPEED (m/sec)			
Mean	Ground	Elevated	Combined
Arithmetic	0.00	5.97	5.97
Harmonic	0.00	4.91	4.91

TABLE B-25

DOSE PARAMETERS FOR FINITE ELEVATED PLUMES
W SITE BOUNDARY*

Noble Gas Radionuclides	V_i Total Body $\left(\frac{mrem/yr}{\mu Ci/sec}\right)$	B_i Gamma Air $\left(\frac{mrad/yr}{\mu Ci/sec}\right)$
Kr-83m	1.33E-09	3.17E-07
Kr-85m	5.83E-05	8.66E-05
Kr-85	8.61E-07	1.30E-06
Kr-87	2.57E-04	3.87E-04
Kr-88	6.92E-04	1.04E-03
Kr-89	3.34E-04	5.01E-04
Xe-131m	1.42E-05	2.27E-05
Xe-133m	1.08E-05	1.79E-05
Xe-133	1.14E-05	1.80E-05
Xe-135m	1.24E-04	1.89E-04
Xe-135	9.33E-05	1.40E-04
Xe-137	2.72E-05	4.11E-05
Xe-138	4.05E-04	6.08E-04
Xe-139	6.46E-06	9.70E-06
Ar-41	4.89E-04	7.34E-04

*The listed dose parameters are for radionuclides that may be detected in gaseous effluents.

TABLE B-26

JOINT FREQUENCY DISTRIBUTION FOR W SECTOR (%)
PERIOD 1-1-77 THROUGH 12-31-77
BRUNSWICK STEAM ELECTRIC PLANT

MAXIMUM WIND SPEED (m/sec)							
Stability	Total	1.50	3.00	5.00	7.50	10.00	12.50
1	0.05	0.00	0.00	0.00	0.05	0.00	0.00
2	0.10	0.00	0.00	0.00	0.10	0.00	0.00
3	0.37	0.00	0.05	0.18	0.12	0.02	0.00
4	1.95	0.02	0.10	0.47	1.07	0.29	0.00
5	2.00	0.01	0.14	0.53	1.07	0.22	0.03
6	0.85	0.07	0.10	0.29	0.36	0.01	0.02
7	0.37	0.06	0.08	0.18	0.05	0.00	0.00
Total	5.69	0.16	0.47	1.65	2.82	0.54	0.05
Entrapment		0.00	0.00	0.00	0.00	0.00	0.00
Ground Velocity		0.23	0.70	1.24	1.93	2.71	3.48
Elevated Velocity		0.74	2.21	3.93	6.14	8.59	11.05

AVERAGE WIND SPEED (m/sec)			
Mean	Ground	Elevated	Combined
Arithmetic	0.00	5.30	5.30
Harmonic	0.00	4.13	4.13

TABLE B-27

DOSE PARAMETERS FOR FINITE ELEVATED PLUMES
WNW SITE BOUNDARY*

Noble Gas Radionuclides	V_i Total Body $\left(\frac{mrem/yr}{\mu Ci/sec}\right)$	B_i Gamma Air $\left(\frac{mrad/yr}{\mu Ci/sec}\right)$
Kr-83m	9.41E-10	2.22E-07
Kr-85m	4.43E-05	6.58E-05
Kr-85	6.61E-07	1.00E-06
Kr-87	1.98E-04	2.98E-04
Kr-88	5.34E-04	8.01E-04
Kr-89	2.54E-04	3.81E-04
Xe-131m	1.07E-05	1.70E-05
Xe-133m	8.13E-06	1.34E-05
Xe-133	8.52E-06	1.34E-05
Xe-135m	9.52E-05	1.44E-04
Xe-135	7.12E-05	1.07E-04
Xe-137	2.05E-05	3.09E-05
Xe-138	3.12E-04	4.68E-04
Xe-139	4.91E-06	7.38E-06
Ar-41	3.77E-04	5.66E-04

*The listed dose parameters are for radionuclides that may be detected in gaseous effluents.

TABLE B-28

JOINT FREQUENCY DISTRIBUTION FOR WNW SECTOR (%)
PERIOD 1-1-77 THROUGH 12-31-77
BRUNSWICK STEAM ELECTRIC PLANT

MAXIMUM WIND SPEED (m/sec)							
Stability	Total	1.50	3.00	5.00	7.50	10.00	12.50
1	0.01	0.00	0.00	0.01	0.00	0.00	0.00
2	0.09	0.00	0.00	0.08	0.01	0.00	0.00
3	0.24	0.00	0.05	0.17	0.02	0.00	0.00
4	1.03	0.01	0.10	0.45	0.45	0.02	0.00
5	1.19	0.03	0.14	0.37	0.50	0.13	0.02
6	0.63	0.05	0.12	0.28	0.17	0.01	0.00
7	0.19	0.03	0.03	0.07	0.06	0.00	0.00
Total	3.38	0.12	0.44	1.43	1.21	0.16	0.02
Entrapment		0.00	0.00	0.00	0.00	0.00	0.00
Ground Velocity		0.23	0.70	1.24	1.93	2.71	3.48
Elevated Velocity		0.74	2.21	3.93	6.14	8.59	11.05

AVERAGE WIND SPEED (m/sec)			
Mean	Ground	Elevated	Combined
Arithmetic	0.00	4.65	4.65
Harmonic	0.00	3.58	3.58

TABLE B-29

DOSE PARAMETERS FOR FINITE ELEVATED PLUMES
NW SITE BOUNDARY*

Noble Gas Radionuclides	V_i Total Body $\left(\frac{mrem/yr}{\mu Ci/sec}\right)$	B_i Gamma Air $\left(\frac{mrad/yr}{\mu Ci/sec}\right)$
Kr-83m	1.02E-9	2.45E-07
Kr-85m	4.69E-05	6.97E-05
Kr-85	6.96E-07	1.05E-06
Kr-87	2.09E-04	3.14E-04
Kr-88	5.61E-04	8.41E-04
Kr-89	2.66E-04	4.00E-04
Xe-131m	1.14E-05	1.81E-05
Xe-133m	8.64E-06	1.43E-05
Xe-133	9.09E-06	1.43E-05
Xe-135m	1.01E-04	1.53E-04
Xe-135	7.53E-05	1.13E-04
Xe-137	2.15E-05	3.24E-05
Xe-138	3.29E-04	4.94E-04
Xe-139	5.39E-06	8.09E-06
Ar-41	3.96E-04	5.95E-04

*The listed dose parameters are for radionuclides that may be detected in gaseous effluents.

TABLE B-30

JOINT FREQUENCY DISTRIBUTION FOR NW SECTOR (%)
PERIOD 1-1-77 THROUGH 12-31-77
BRUNSWICK STEAM ELECTRIC PLANT

MAXIMUM WIND SPEED (m/sec)							
Stability	Total	1.50	3.00	5.00	7.50	10.00	12.50
1	0.01	0.00	0.00	0.01	0.00	0.00	0.00
2	0.12	0.00	0.01	0.08	0.03	0.00	0.00
3	0.24	0.00	0.02	0.17	0.05	0.00	0.00
4	1.14	0.01	0.16	0.54	0.33	0.09	0.01
5	1.08	0.02	0.12	0.40	0.28	0.10	0.16
6	0.57	0.05	0.17	0.17	0.16	0.01	0.01
7	0.35	0.03	0.07	0.12	0.13	0.00	0.00
Total	3.51	0.11	0.55	1.49	0.98	0.20	0.18
Entrapment		0.00	0.00	0.00	0.00	0.00	0.00
Ground Velocity		0.23	0.70	1.24	1.93	2.71	3.48
Elevated Velocity		0.74	2.21	3.93	6.14	8.59	11.05

AVERAGE WIND SPEED (m/sec)			
Mean	Ground	Elevated	Combined
Arithmetic	0.00	4.81	4.81
Harmonic	0.00	3.59	3.59

TABLE B-31

DOSE PARAMETERS FOR FINITE ELEVATED PLUMES
NNW SITE BOUNDARY*

Noble Gas Radionuclides	V_i Total Body $\left(\frac{mrem/yr}{\mu Ci/sec}\right)$	B_i Gamma Air $\left(\frac{mrad/yr}{\mu Ci/sec}\right)$
Kr-83m	6.97E-10	9.17E-08
Kr-85m	3.96E-05	5.87E-05
Kr-85	5.96E-07	9.04E-07
Kr-87	1.80E-04	2.71E-04
Kr-88	4.83E-04	7.24E-04
Kr-89	2.39E-04	3.59E-04
Xe-131m	9.37E-06	1.47E-05
Xe-133m	7.10E-06	1.15E-05
Xe-133	7.36E-06	1.15E-05
Xe-135m	8.70E-05	1.32E-04
Xe-135	6.39E-05	9.60E-05
Xe-137	1.94E-05	2.94E-05
Xe-138	2.83E-04	4.25E-04
Xe-139	6.08E-06	9.13E-06
Ar-41	3.42E-04	5.14E-04

*The listed dose parameters are for radionuclides that may be detected in gaseous effluents.

TABLE B-32

JOINT FREQUENCY DISTRIBUTION FOR NNW SECTOR (%)
PERIOD 1-1-77 THROUGH 12-31-77
BRUNSWICK STEAM ELECTRIC PLANT

MAXIMUM WIND SPEED (m/sec)							
Stability	Total	1.50	3.00	5.00	7.50	10.00	12.50
1	0.00	0.00	0.00	0.00	0.00	0.00	0.00
2	0.02	0.00	0.00	0.01	0.01	0.00	0.00
3	0.12	0.00	0.00	0.06	0.06	0.00	0.00
4	1.00	0.01	0.14	0.36	0.37	0.09	0.03
5	1.17	0.02	0.12	0.27	0.25	0.12	0.39
6	0.82	0.02	0.13	0.23	0.17	0.03	0.24
7	0.34	0.05	0.10	0.14	0.00	0.05	0.00
Total	3.47	0.10	0.49	1.07	0.86	0.29	0.66
Entrapment		0.00	0.00	0.00	0.00	0.00	0.00
Ground Velocity		0.23	0.70	1.24	1.93	2.71	3.48
Elevated Velocity		0.74	2.21	3.93	6.14	8.59	11.05

AVERAGE WIND SPEED (m/sec)			
Mean	Ground	Elevated	Combined
Arithmetic	0.00	5.89	5.89
Harmonic	0.00	4.02	4.02

LIST OF TABLES

Table No.	Title	Page
APPENDIX C		
C-1	PARAMETERS FOR COW AND GOAT MILK PATHWAYS	C-14
C-2	PARAMETERS FOR THE MEAT PATHWAY	C-15
C-3	PARAMETERS FOR VEGETABLE PATHWAY	C-16

APPENDIX C

DOSE PARAMETERS FOR RADIOIODINES, PARTICULATES AND TRITIUM

This appendix contains the methodology which was used to calculate the dose parameters for radioiodines, particulates, and tritium to show compliance with 10CFR 20 and Appendix I of 10CFR50 for gaseous effluents. These dose parameters P_i and R_i were calculated using the methodology outlined in NUREG 0133, Regulatory Guide 1.109 Revision 1, and letter to J. W. Davis, "Dose Factors for Hf-181 and SN-113", BSEP File: B10-10530, May 24, 1988. The following sections provide the specific methodology which was utilized in calculating the P_i and R_i values for the various exposure pathways.

C.1 CALCULATION OF P_i

The parameter P_i contained in the radioiodine and particulate portion of Section 3.2, includes pathway transport parameters of the ith radionuclide, the receptor's usage of the pathway media and the dosimetry of the exposure. Pathway usage rates and the internal dosimetry are functions of the receptor's age; however, the youngest age group, the infant, will always receive the maximum dose under the exposure conditions for ODCM, Section 1, 3.11.2.1(b). For the infant exposure, separate values of P_i may be calculated for the inhalation pathway which is combined with a W parameter based on (χ/Q), and the food (milk) and ground pathway which is combined with a W parameter normally based on (D/Q), except for tritium. The following sections provide in detail the methodology which was used in calculating the P_i values for inclusion into this ODCM.

C.1.1 Inhalation Pathway

$$P_i = K' (BR) DFA_i \qquad \text{(C.1-1)}$$

where:

P_i = dose parameter for radionuclide i for the inhalation pathway, mrem/yr per $\mu Ci/m^3$

K' = a constant of unit conversion

= 10^6 pCi/μCi

BR = the breathing rate of the infant age group, m^3/yr

DFA_i = the maximum organ inhalation dose factor for the infant age group for radionuclide i, mrem/pCi

The age group considered is the infant group. The infant's breathing rate is taken as 1400 m^3/yr from Table E-5 of Regulatory Guide 1.109 Revision 1. The inhalation dose factors for the infant, DFA_i, are presented in Table E-10 of Regulatory Guide 1.109, BSEP File: B10-10530, Letter to J. W. Davis "Dose Factors for Hf-181 and Sn-113, "May 24, 1988, and NUREG CR4653 for Am-241, in units of mrem/pCi. The total body is considered as an organ in the selection of DFA_i.

The incorporation of breathing rate of an infant and the unit conversion factor results in the following:

$$P_i = 1.4 \times 10^9 \, DFA_i \qquad \text{(C.1-2)}$$

C.1.2 Ground Plane Pathway

$$P_{iG} = K'K''DFG_i(1-e^{-\lambda_i t})/\lambda_i \qquad \text{(C.1-3)}$$

where:

P_{iG} = Dose parameter for radionuclide i for the ground plane pathway, mrem/yr per μCi/sec per m^{-2}

K' = A constant of unit conversion

= 10^6pCi/μCi

K'' = A constant of unit conversion

= 8760 hr/yr

λ_i = The radiological decay constant for radionuclide i, sec^{-1}

t = The exposure period

= 3.15×10^7 sec (1 year)

DFG_i = The ground plane dose conversion factor for radionuclide i, mrem/hr per pCi/m^2

The deposition rate onto the ground plane results in a ground plane concentration that is assumed to persist over a year with radiological decay the only operating removal mechanism for each radionuclide. The ground plane dose conversion factors for radionuclide i, DFG_i, are presented in Table E-6 of Regulatory Guide 1.109, Revision 1. BSEP File: B10-10530, Letter to J. W. Davis "Dose Factors for Hf-181 and Sn-113," May 24, 1988, and NUREG CR4653 for Am-241.

Resolution of the units yields:

$$P_{iG} = 8.76 \times 10^9 \, DFG_i(1-e^{-\lambda_i t})/\lambda_i \qquad \text{(C.1-4)}$$

C.1.3 <u>Milk</u>

$$P_{iM} = \frac{K' r \, Q_F \, (U_{ap}) \, F_m}{Y_p \, (\lambda_i + \lambda_w)} \, DFL_i \, e^{-\lambda_i t_f} \qquad \text{(C.1-5)}$$

where:

P_{iM} = Dose parameter for radionuclide i for the cow milk or goat milk pathway, mrem/yr per μCi/sec per m^{-2}

K' = A constant of unit conversion

= 10^6 pCi/μCi

Q_F = The cow's or goat's consumption rate of feed, kg/day (wet weight)

U_{ap} = The infant's milk consumption rate, liters/yr

Y_p = The agricultural productivity by unit area, kg/m^2

F_m = The stable element transfer coefficient, pCi/liter per pCi/day

r = Fraction of deposited activity retained on cow's or goat's feed grass

DFL_i = The maximum organ ingestion dose factor for radionuclide i, mrem/pCi

λ_i = The radiological decay constant for radionuclide i sec^{-1}

λ_w = The decay constant for removal of activity on leaf and plant surfaces by weathering, sec^{-1}

= 5.73×10^{-7} sec^{-1} (corresponding to a 14 day half-time)

t_f = The transport time from pasture to cow or goat to milk to infant, sec

A fraction of the airborne deposition is captured by the ground plant vegetation cover. The captured material is removed from the vegetation (grass) by both radiological decay and weathering processes.

Various parameters which were utilized to determine the P_i values for the cow and goat milk pathways are provided in Table C-1. Table E-1 of Regulatory Guide 1.109, Revision 1, provides the stable element transfer coefficients, F_m, and Table E-14 of the same regulatory guide provides the ingestion dose factors, DFL_i, BSEP File: B10-10530, Letter to J. W. Davis "Dose Factors for Hf-181 and Sn-113," May 24, 1988, and NUREG CR4653 for AM-241, for the infant's organs. The organ with the maximum value of DFL_i was used in the determination of P_i for this pathway. The incorporation of the various constants of Table C-1 into Equation C.1-5 results in the following:

For cow's milk for radioiodines and particulates:

$$P_{iM} = 2.14 \times 10^{10} \frac{rFm}{\lambda_i + \lambda_w} DFL_i \; e^{-\lambda_i t_f} \qquad \text{(C.1-6)}$$

For the goat milk pathway for radioiodines and particulates:

$$P_{iM} = 2.8 \times 10^{9} \frac{rFm}{\lambda_i + \lambda_w} DFL_i \; e^{-\lambda_i t_f} \qquad \text{(C.1-7)}$$

For tritium, the concentration of tritium in milk is based on its airborne concentration rather than the deposition rate.

$$P_{TM} = K'K'''F_m Q_F U_{ap} DFL_T \, [0.75 \, (0.5/H)] \qquad \text{(C.1-8)}$$

where:

P_{TM} = Dose parameter for tritium for the cow milk and goat milk pathways, mrem/yr per $\mu Ci/m^3$

K''' = A constant of unit conversion

= 10^3 gm/kg

H = Absolute humidity of the atmosphere, gm/m^3

0.75 = The fraction of total feed that is water

0.5 = The ratio of the specific activity of the feed grass water to the atmospheric water

DFL_T = Maximum organ ingestion dose factor for tritium, mrem/pCi

C.2 CALCULATION OF R_i

The Radioiodine and Particulate ODCM Specification 7.3.9 is applicable to the location in the unrestricted area where the combination of existing pathways and receptor age groups indicates the maximum potential exposure occurs. The inhalation and ground plane exposure pathways shall be considered to exist at all locations. The grass-goat-milk, the grass-cow-milk, grass-cow-meat, and vegetation pathways are considered based on their existence at the various locations. R_i values have been calculated for the adult, teen, child, and infant age groups for the ground plane, cow milk, goat milk, vegetable and beef ingestion pathways. The methodology which was utilized to calculate these values is presented below.

C.2.1 Inhalation Pathway

$$R_{i_i} = K' (BR)_a (DFA_i)_a \qquad \text{(C.2-1)}$$

where:

R_{i_i} = Dose factor for each identified radionuclide i of the organ of interest, mrem/yr per $\mu Ci/m^3$

K' = A constant of unit conversion

= 10^6 pCi/μCi

$(BR)_a$ = Breathing rate of the receptor of age group a, m^3/yr

$(DFA_i)_a$ = Organ inhalation dose factor for radionuclide i for the receptor of age group a, mrem/pCi

The breathing rates $(BR)_a$ for the various age groups are tabulated below, as given in Table E-5 of the Regulatory Guide 1.109, Revision 1.

Age Group (a)	Breathing Rate (m^3/yr)
Infant	1400
Child	3700
Teen	8000
Adult	8000

Inhalation dose factors $(DFA_i)_a$ for the various age groups are given in Tables E-7 through E-10 of Regulatory Guide 1.109, Revision 1, BSEP File: B10-10530, Letter to J. W. Davis "Dose Factors for Hf-181 and Sn-113," May 24, 1988, and NUREG CR4653 for AM-241.

C.2.2 Ground Plane Pathway

$$R_{i_G} = I_i K'K''(SF)DFG_i (1 - e^{-\lambda_i t}) / \lambda_i \qquad \text{(C.2-2)}$$

where:

R_{i_G} = Dose factor for the ground plane pathway for each identified radionuclide i for the organ of interest, mrem/yr per μCi/sec per m^{-2}

K' = A constant of unit conversion

= 10^6 pCi/μCi

K'' = A constant of unit conversion

= 8760 hr/year

λ_i = The radiological decay constant for radionuclide i, sec^{-1}

t = The exposure time, sec

= 4.73×10^8 sec (15 years)

DFG_i = The ground plane dose conversion factor for radionuclide i; mrem/hr per pCi/m^2

SF = The shielding factor (dimensionless)

I_i = Factor to account for fractional deposition of radionuclide i

For radionuclides other than iodine, the factor I_i is equal to one. For radioiodines, the value of I_i may vary. However, a value of 1.0 was used in calculating the R values in Table 3.3-2.

A shielding factor of 0.7 is suggested in Table E-15 of Regulatory Guide 1.109 Revision 1. A tabulation of DFG_i values is presented in Table E-6 of Regulatory Guide 1.109, Revision 1.

C.2.3 Grass-Cow or Goat Milk Pathway

$$R_{i_M} = I_i K' Q_F U_{ap} F_m (DFL_i)_a e^{-\lambda_i t_f}$$

$$\left\{ f_p f_s \left[\frac{r(1-e^{-\lambda_{E_i} t_e})}{Y_p \lambda_{E_i}} + \frac{B_{iv}(1-e^{-\lambda_i t_b})}{P\lambda_i} \right] + (1-f_p f_s) \left[\frac{r(1-e^{-\lambda_{E_i} t_e})}{Y_s \lambda_{E_i}} + \frac{B_{iv}(1-e^{-\lambda_i t_b})}{P\lambda_i} \right] e^{-\lambda_i t_h} \right\}$$

(C.2-3)

where:

R_{i_M} = Dose factor for the cow milk or goat milk pathway, for each identified radionuclide i for the organ of interest, mrem/yr per μCi/sec per m^{-2}

K′ = A constant of unit conversion

= 10^6 pCi/μCi

Q_F = The cow's or goat's feed consumption rate. kg/day (wet weight)

U_{ap} = The receptor's milk consumption rate for age group a, liters/yr

Y_p = The agricultural productivity by unit area of pasture feed grass, kg/m^2

Y_s = The agricultural productivity by unit area of stored feed, kg/m^2

F_m = The stable element transfer coefficients, pCi/liter per pCi/day

r	=	Fraction of deposited activity retained on cow's feed grass
$(DFL_i)_a$	=	The organ ingestion dose factor for radionuclide i for the receptor in age group a, mrem/pCi
λ_{E_i}	=	$\lambda_i + \lambda_w$
λ_i	=	The radiological decay constant for radionuclide i, sec^{-1}
λ_w	=	The decay constant for removal of activity on leaf and plant surfaces by weathering sec^{-1}
	=	5.73×10^{-7} sec^{-1} (corresponding to a 14 day half-life)
t_f	=	The transport time from feed to cow or goat to milk, to receptor, sec
t_h	=	The transport time from harvest to cow or goat consumption, sec
t_b	=	Period of time that soil is exposed to gaseous effluents, sec
B_{iv}	=	Concentration factor for uptake of radionuclide i from the soil by the edible parts of crops, pCi/Kg (wet weight) per pCi/Kg (dry soil)
P	=	Effective surface density for soil, Kg (dry soil)/m^2
f_p	=	Fraction of the year that the cow or goat is on pasture
f_s	=	Fraction of the cow feed that is pasture grass while the cow is on pasture
t_e	=	Period of pasture grass and crop exposure during the growing season, sec
I_i	=	Factor to account for fractional deposition of radionuclide i

For radionuclides other than iodine, the factor I_i is equal to one. For radioiodines, the value of I_i may vary. However, a value of 1.0 was used in calculating the R values Tables 3.3-9 through 3.3-16.

Milk cattle and goats are considered to be fed from two potential sources, pasture grass and stored feeds. Following the development in Regulatory Guide 1.109, Revision 1, the value of f_s was considered unity in lieu of site-specific information. The value of f_p was 0.667 based upon an 8-month grazing period.

Table C-1 contains the appropriate parameter values and their source in Regulatory Guide 1.109, Revision 1.

The concentration of tritium in milk is based on the airborne concentration rather than the deposition. Therefore, the R_i is based on X/Q:

$$R_{T_M} = K'K'''F_m Q_F U_{ap} (DFL_i)_a \left[0.75\left(\frac{0.5}{H}\right)\right] \qquad \text{(C.2-4)}$$

where:

R_{T_M}	=	Dose factor for the cow or goat milk pathway for tritium for the organ of interest, mrem/yr per $\mu Ci/m^3$
K'	=	A constant unit of conversion, 10^6 pCi/μCi
K'''	=	A constant unit of conversion
	=	10^3gm/kg
H	=	Absolute humidity of the atmosphere, gm/m^3
0.75	=	The fraction of total feed that is water
0.5	=	The ratio of the specific activity of the feed grass water to the atmospheric water

Other parameters and values as defined previously. A value for H of 8 grams/meter^3, was used in lieu of site-specific information.

C.2.4 Grass-Cow-Meat Pathway

The integrated concentration in meat follows in a similar manner to the development for the milk pathway, therefore:

$$R_{iB} = I_i K' Q_F U_{ap} F_f (DFL_i)_a e^{-\lambda_i t_s}$$
$$\left\{ f_p f_s \left[\frac{r(1-e^{-\lambda_{Ei} t_e})}{Y_p \lambda_{Ei}} + \frac{B_{iv}(1-e^{-\lambda_i t_b})}{P\lambda_i} \right] + (1-f_p f_s)\left[\frac{r(1-e^{-\lambda_{Ei} t_e})}{Y_s \lambda_{Ei}} + \frac{B_{iv}(1-e^{-\lambda_i t_b})}{P\lambda_i} \right] e^{-\lambda_i t_h} \right\} \qquad \text{(C.2-5)}$$

where:

R_{iB}	=	Dose factor for the meat ingestion pathway for radionuclide i for any organ of interest, mrem/yr per μCi/sec per m^{-2}

F_f = The stable element transfer coefficients, pCi/Kg per pCi/day

U_{ap} = The receptor's meat consumption rate for age group a, kg/yr

t_s = The transport time from slaughter to consumption, sec

t_h = The transport time from harvest to animal consumption, sec

t_e = Period of pasture grass and crop exposure during the growing season, sec

I_i = Factor to account for fractional deposition of radionuclide i

For radionuclides other than iodine, the factor I_i is equal to one. For radioiodines, the value of I_i may vary. However, a value of 1.0 was used in calculating the R values in Tables 3.3-6 through 3.3-8.

All other terms remain the same as defined in Equation C.2-3. Table C-2 contains the values which were used in calculating R_i for the meat pathway.

The concentration of tritium in meat is based on its airborne concentration rather than the deposition. Therefore, R_i is based on X/Q.

$$R_{T_B} = K'K'''F_f Q_F U_{ab} (DFL_i)_a \left[0.75\left(\frac{0.5}{H}\right)\right] \qquad \text{(C.2-6)}$$

where:

R_{T_B} = Dose factor for the meat ingestion pathway for tritium for any organ of interest, mrem/yr per $\mu Ci/m^3$

All other terms are as defined in Equation C.2-4 and C.2-5, above.

C.2.5 Vegetation Pathway

The integrated concentration in vegetation consumed by man follows the expression developed in the derivation of the milk factor. Man is considered to consume two types of vegetation (fresh and stored) that differ only in the time period between harvest and consumption, therefore:

$$R_{iv} = I_i K'(DFL_i)_a$$

$$\left\{ U_a^L f_L \, e^{-\lambda_i t_L} \left[\frac{r(1-e^{-\lambda_{E_i} t_e})}{Y_v \lambda_{E_i}} + \frac{B_{iv}(1-e^{-\lambda_i t_b})}{P\lambda_i} \right] + U_a^S f_g \, e^{-\lambda_i t_h} \left[\frac{r(1-e^{-\lambda_{E_i} t_e})}{Y_v \lambda_{E_i}} + \frac{B_{iv}(1-e^{-\lambda_i t_b})}{P\lambda_i} \right] \right\} \quad \text{(C.2-7)}$$

where:

R_{iv}	=	Dose factor for vegetable pathway for radio nuclide i for the organ of interest mrem/yr per μCi/sec per m^{-2}
K'	=	a constant of unit conversion
	=	10^6 pCi/μCi
U_a^L	=	The consumption rate of fresh leafy vegetation by the receptor age group a, kg/yr
U_a^S	=	The consumption rate of stored vegetation by the receptor in age group a, kg/yr
f_g	=	The fraction of the annual intake of stored vegetation grown locally
f_L	=	The fraction of annual intake of fresh, leafy vegetables grown locally
t_L	=	The average time between harvest of leafy vegetation and its consumption, sec
t_h	=	The average time between harvest of stored vegetation and its consumption, sec
Y_v	=	The vegetation area density, kg/m^2
t_e	=	Period of leafy vegetable exposure during growing season, sec
I_i	=	Factor to account for fractional deposition of radionuclide i

For radionuclides other than iodine, the factor I_i is equal to one. For radioiodines, the value of I_i may vary. However, a value of 1.0 was used in Tables 3.3-3 through 3.3-5.

All other factors were defined above.

Table C-3 presents the appropriate parameter values and their source in Regulatory Guide 1.109, Revision 1.

In lieu of site-specific data default values for f_L and f_g, 1.0 and 0.76, respectively, were used in the calculation of R_i. These values were obtained from Table E-15 of Regulatory Guide 1.109, Revision 1.

The concentration of tritium in vegetation is based on the airborne concentration rather than the deposition. Therefore, the R_i is bases on χ/Q:

$$R_{T_V} = K'K'''\left[U_a^L f_L + U_a^S f_g\right](DFL_i)_a\left[0.075\left(\frac{0.5}{H}\right)\right] \quad \text{(C.2-8)}$$

where:

R_{T_V} = Dose factor for the cow or goat milk pathway for tritium for the organ of interest, mrem/yr per $\mu Ci/m^3$

All other terms remain the same as those in Equations C.2-4 and C.2-7.

TABLE C-1

PARAMETERS FOR COW AND GOAT MILK PATHWAYS

Parameter	Value	Reference (Reg. Guide 1.109, Rev. 1)
Q_F (kg/day)	50 (cow)	Table E-3
	6 (goat)	Table E-3
Y_p (kg/m^2)	0.7	Table E-15
t_f (seconds)	1.73×10^5 (2 days)	Table E-15
r	1.0 (radioiodines) 0.2 (particulates)	Table E-15 Table E-15
$(DFL_i)_a$ (mrem/pCi)	Each radionuclide	Tables E-11 to E-14*
F_m (pCi/1 per pCi/day)	Each stable element	Table E-1 (cow)* Table E-2 (goat)**
t_b (seconds)	4.73×10^8 (15 yr)	Table E-15
Y_s (kg/m^2)	2.0	Table E-15
Y_p (kg/m^2)	0.7	Table E-15
t_h (seconds)	7.78×10^6 (90 days)	Table E-15
U_{ap} (liters/yr)	330 infant 330 child 400 teen 310 adult	Table E-5 Table E-5 Table E-5 Table E-5
t_e (seconds)	2.59×10^6 (pasture) 5.18×10^6 (stored feed)	Table E-15
B_{iv} pCi/Kg (wet weight) per pCi/Kg (dry soil)	Each stable element	Table E-1
P Kg (dry soil)/m^2	240	Table E-15

*Reference 1, BSEP File: B10-10530, Letter to J. W. Davis "Dose Factors for Hf-181 and Sn-113," May 24, 1988, and NUREG CR4653 for AM-241.

**Where goat data was not available, cow value F_m was assumed.

TABLE C-2

PARAMETERS FOR THE MEAT PATHWAY

Parameter	Value	Reference (Reg. Guide 1.109, Rev. 1)
r	1.0 (radioiodines) 0.2 (particulates)	Table E-15 Table E-15
F_f (pCi/Kg per pCi/day)	Each stable element	Table E-1*
U_{ap} (Kg/yr)	0 infant 41 child 65 teen 110 adult	Table E-5 Table E-5 Table E-5 Table E-5
$(DFL_i)_a$ (mrem/pCi)	Each radionuclide	Tables E-11 to E-14
Y_p (kg/m^2)	0.7	Table E-15
Y_s (kg/m^2)	2.0	Table E-15
t_b (seconds)	4.73×10^8 (15 yr)	Table E-15
t_s (seconds)	1.73×10^6 (20 days)	Table E-15
t_h (seconds)	7.78×10^6 (90 days)	Table E-15
t_e (seconds)	2.59×10^6 (pasture) 5.18×10^6 (stored feed)	Table E-15
Q_F (kg/day)	50	Table E-3
B_{iv} pCi/Kg (wet weight) per pCi/Kg (dry soil)	Each stable element	Table E-1*
P kg (dry soil)/m^2	240	Table E-15

*Reference 1, BSEP File: B10-10530, Letter to J. W. Davis "Dose Factors for Hf-181 and Sn-113," May 24, 1988, and NUREG CR4653 for AM-241.

TABLE C-3

PARAMETERS FOR THE VEGETABLE PATHWAY

Parameter		Value	Reference (Reg. Guide 1.109, Rev. 1)
r (dimensionless)		1.0 (radioiodines)	Table E-1
		0.2 (particulates)	Table E-1
$(DFL_i)_a$ (mrem/Ci)		Each radionuclide	Tables E-11 to E-14*
U_a^L (kg/yr)	-Infant	0	Table E-5
	-Child	26	Table E-5
	-Teen	42	Table E-5
	-Adult	64	Table E-5
U_a^S (kg/yr)	-Infant	0	Table E-5
	-Child	520	Table E-5
	-Teen	630	Table E-5
	-Adult	520	Table E-5
t_L (seconds)		8.6×10^4 (1 day)	Table E-15
t_h (seconds)		5.18×10^6 (60 days)	Table E-15
Y_V (kg/m^2)		2.0	Table E-15
t_e (seconds)		5.18×10^6 (60 days)	Table E-15
t_b (seconds)		4.73×10^8 (15 yr)	Table E-15
P (Kg[dry soil]/m^2)		240	Table E-15
B_{iv}	(pCi/Kg[wet weight] per pCi/kg [dry soil])	Each stable element	Table E-1*

*Reference 1, BSEP File: B10-10530, Letter to J. W. Davis "Dose Factors for Hf-181 and Sn-113," May 24, 1988, and NUREG CR4653 for AM-241.

APPENDIX D

LOWER LIMIT OF DETECTION (LLD)

The following discussion of LLD is taken from NUREG-0473, Rev. 2, February 1, 1980. It represents the bases for LLD footnotes (e) in Table 7.3.3-1, (e) in Table 7.3.3-2, (a) in Table 7.3.7-1, and (b) in Table 7.3.15-3 of the BSEP ODCM Specifications. The LLD is the smallest concentration of radioactive material in a sample that will be detected with 95 percent probability with 5 percent probability of falsely concluding that a blank observation represents a "real" signal.

For a particular measurement system (which may include radiochemical separation):

$$LLD = \frac{4.66\, s_b}{E \cdot V \cdot 2.22 \times 10^6 \cdot Y \cdot \exp(-\lambda \Delta t)}$$

LLD is the "a priori" lower limit of detection as defined above (as microcurie per unit mass or volume),

s_b is the standard deviation of the background counting rate or of the counting rate of a blank sample as appropriate (as counts per minute),

E is the counting efficiency (as counts per transformation),

V is the sample size (in units of mass or volume),

2.22×10^6 is the number of transformations per minute per microcurie,

Y is the fractional radiochemical yield (when applicable),

λ is the radioactive decay constant for the particular radionuclide, and Δt is the elapsed time between midpoint of sample collection and time of counting (for plants effluents, not environmental samples).

The value of s_b used in the calculation of the LLD for a detection system shall be based on the actual observed variance of the background counting rate or of the counting rate of the blank samples (as appropriate) rather than on an unverified theoretically predicted variance. Typical values of E, V, Y, and Δt shall be used in the calculation.

APPENDIX E

RADIOACTIVE LIQUID AND GASEOUS EFFLUENT MONITORING INSTRUMENTATION NUMBERS

I. Liquid Effluent Monitoring Instruments

A.	Liquid Radwaste Radioactivity Monitor	2-D12-RM-K604
B.	Liquid Radwaste Effluent Flow Measurement Device	2-G16-FIT-N057
C.	Main Service Water Effluent Radioactivity Monitor	1(2)-D12-RM-K605
D.	Stabilization Pond Effluent Composite Sampler	2-DST-XE-5027
E.	Stabilization Pond Effluent Flow Measurement Device	2-DST-FIT-5026
F.	Condensate Storage Tank Level Indicating Device	1(2)-CO-LIT-1160

II. Gaseous Effluent Monitoring Instruments

1. Main Stack Monitoring System

a.	Noble Gas Activity Monitor	2-D12-RM-23S (2-D12-RE-4982)
b.	Iodine Sampler Cartridge	IRSH35 Prefilters A or B
c.	Particulate Sampler Filter	IRSH35 Prefilters A or B
d.	System Effluent Flow Rate Measurement Device	2-VA-FIQ-5902-1 OR -2
e.	Sampler Flow Rate Measurement Device	2-D12-FE-4597

2. Reactor Building Ventilation Monitoring System

a.	Noble Gas Activity Monitor	1(2)-CAC-AQH-1264-3
b.	Iodine Sampler Cartridge	1(2)-CAC-AQH-1264-2 (collection cartridge only)
c.	Particulate Sampler Filter	1(2)-CAC-AQH-1264-1 (collection filter only)
d.	System Effluent Flow Rate Measurement Device	1(2)-VA-FIQ-3356
e.	Sampler Flow Rate Measurement Device	1(2)-CAC-FI-1264

RADIOACTIVE LIQUID AND GASEOUS EFFLUENT MONITORING INSTRUMENTATION NUMBERS (Cont'd)

3. Turbine Building Ventilation Monitoring System

a.	Noble Gas Activity Monitor	1(2)-D12-RM-23 (1(2)-D12-RE-4563)
b.	Iodine Sampler Cartridge	1(2)-IRTB32 Prefilters A or B
c.	Particulate Sampler Filter	1(2)-IRTB32 Prefilters A or B
d.	System Effluent Flow Rate Measurement Device	1(2)-VA-FIQ-3358
e.	Sampler Flow Rate Measurement Device	1(2)-D12-FE-4542

4. Main Condenser Off-Gas Treatment System (AOG) Monitor

a.	Noble Gas Activity Monitor	1(2)-AOG-RM-103

5. Main Condenser Off-Gas Treatment System Explosive Gas Monitoring System

a. Recombiner Train A

1.	First Hydrogen Monitor	1(2)-OG-AIT-4284 - Stream 1
2.	Second Hydrogen Monitor	1(2)-OG-AIT-4324 - Stream 2

b. Recombiner Train B

1.	First Hydrogen Monitor	1(2)-OG-AIT-4324 - Stream 1
2.	Second Hydrogen Monitor	1(2)-OG-AIT-4284 - Stream 2

6. Main Condenser Air Ejector Radioactivity Monitor

a.	Noble Gas Activity Monitor	1(2)-D12-RM-K601 A and B

7. Hot Shop Ventilation Monitoring System

a. Iodine Sampler Cartridge

b. Particulate Sampler Filter

RADIOACTIVE LIQUID AND GASEOUS EFFLUENT MONITORING INSTRUMENTATION NUMBERS (Cont'd)

8. Radioactive Materials Container and Storage Building Decontamination Facility
   a. Iodine Sampler Cartridge
   b. Particulate Sampler Filter

APPENDIX F

LIQUID AND GASEOUS EFFLUENT SYSTEM DIAGRAMS

FIGURE F-1

Liquid Radwaste Effluent System

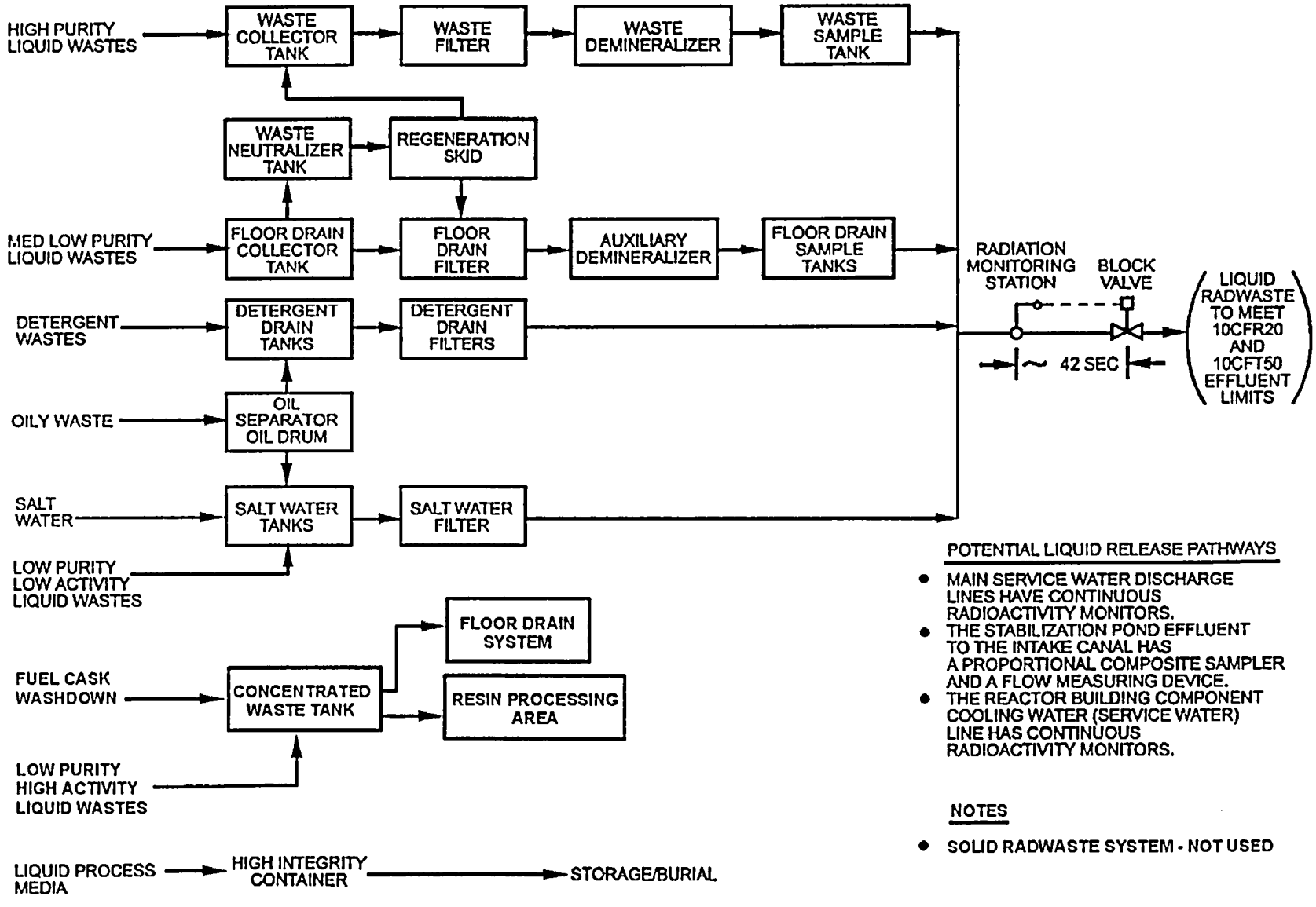

POTENTIAL LIQUID RELEASE PATHWAYS

- MAIN SERVICE WATER DISCHARGE LINES HAVE CONTINUOUS RADIOACTIVITY MONITORS.
- THE STABILIZATION POND EFFLUENT TO THE INTAKE CANAL HAS A PROPORTIONAL COMPOSITE SAMPLER AND A FLOW MEASURING DEVICE.
- THE REACTOR BUILDING COMPONENT COOLING WATER (SERVICE WATER) LINE HAS CONTINUOUS RADIOACTIVITY MONITORS.

NOTES

- SOLID RADWASTE SYSTEM - NOT USED

FIGURE F-2

Gaseous Radwaste Effluent System

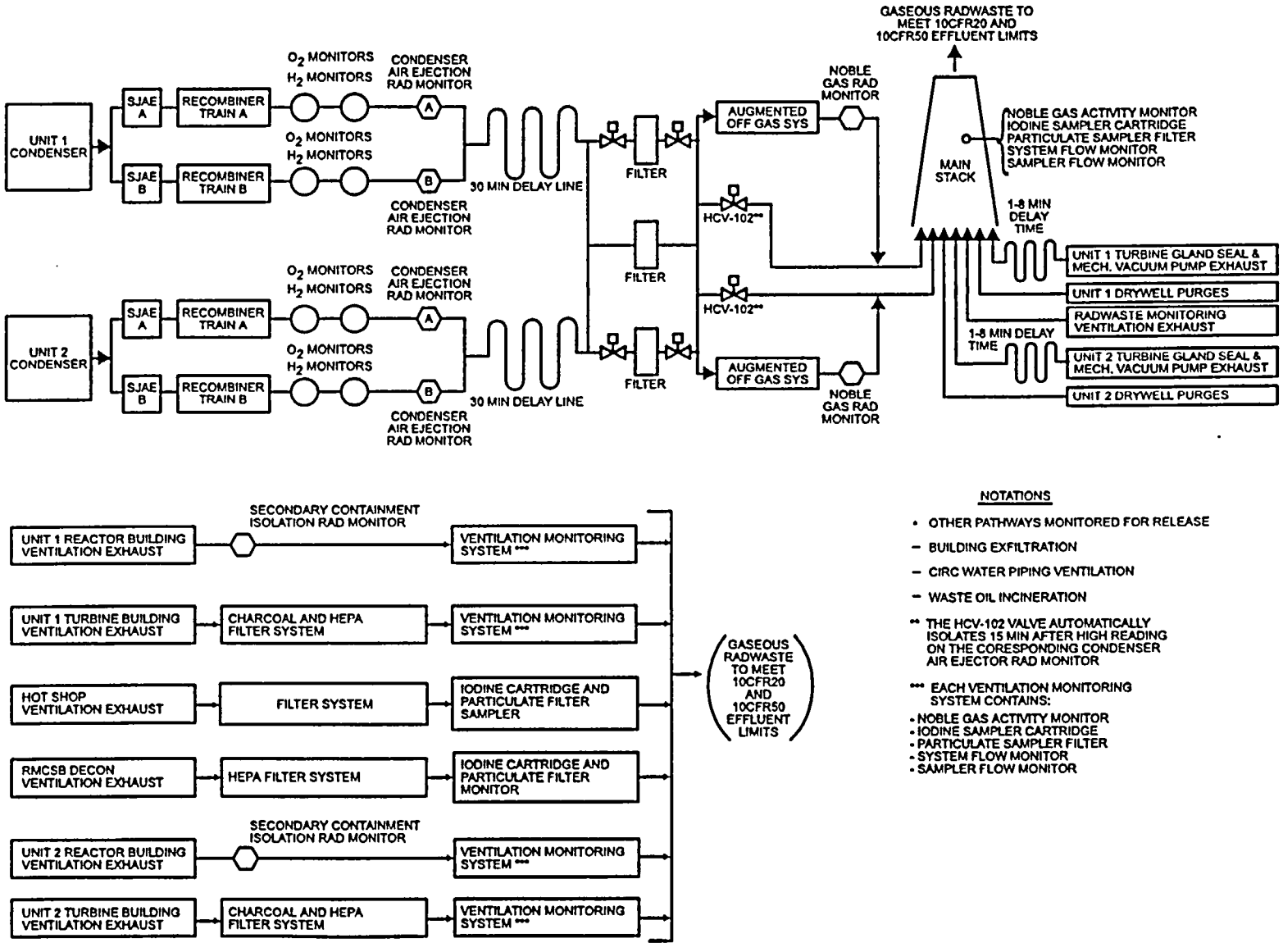

APPENDIX G

ODCM SOFTWARE PACKAGE

In order to minimize calculational errors and to facilitate the use of the ODCM, BSEP has developed an ODCM software package. All applicable calculations listed in the ODCM have been included in this software.

During periods when the ODCM software is not available, the following alternate method may be used to assess dose or dose rates to the public from liquid or gaseous effluents:

$$Dt = (Dh \times Ct)/Ch$$

where:
- Dt = the unknown dose/dose rate for the time period
- Dh = the known dose/dose rate from historical data
- Ct = the total curies released for the time period
- Ch = the total curies used to calculate the known dose/dose rate

When the ODCM software becomes available again, all doses to the public will be reassessed using the software package.

APPENDIX H

METHODOLOGY AND CALCULATIONS FOR BURNING WASTE OIL

To permit burning of slightly contaminated waste oil in the clean trash incinerator, an insignificant fraction (0.1%) of the following regulations must be met: 10CFR20; 10CFR50, Appendix I; and 40CFR190. The following sections contain the methodology and the calculations to determine the concentration and the cumulative total activity to be used in procedures to demonstrate compliance with the above regulations.

I. Compliance with 10CFR20 for I-131, I-133, Particulates, and Tritium

The inhalation dose rate associated with burning waste oil is insignificant by definition. Regulatory Guide 1.109 states, "A pathway is considered significant if a conservative evaluation yields an additional dose increment equal to or more than 10 percent of the total from all pathways considered." Since the release rate by incineration of waste oil is ≤ 10% of the plant's total release rate, the dose rate via waste oil is insignificant.

10CFR20 Limit = 1500 mrem/yr (Inhalation to a child's most critical organ)

Insignificant = 150 mrem/yr (10% of limit)

0.1% of 10CRF20 = 1.5 mrem/yr, this more than meets the above criteria and is a consistent fraction as listed in ODCM Specification 7.3.9.c.

Since the limit is going to be limited to 0.1% of 10CFR20, the maximum release rate (μCi/sec) can be calculated by the following equation:

$$Q_i = \frac{1.5 \text{ mrem/yr}}{(R_{ij})\ (X/Q)}$$

where =

R_{ij} = Dose factor for the most restrictive organ to a child (lung) for inhalation using Co-60 (7.06E6 mrem/yr/μCi/m^3)

$\overline{X/Q}$ = Annual average relative concentration for release from the Turbine Building, 7.5E-6 sec/m^3

Since the incinerator operates > 500 hrs/yr and the stack height is considered to be ground level, the meteorology used for dilution will be the same as the Turbine Buildings (ground level continuous). From Appendix A, Table A-1 the most restrictive sector is SSE (7.5E-6 sec/m^3).

For the source term mix, 100% of the activity is assumed to be Cobalt-60. Most of the activity in the slightly contaminated oil is corrosion and activation products with occasional detection of Cesium-134 and Cesium-137.

No iodines will be permitted in the waste oil for incineration. Cobalt-60 is the most restrictive radionuclide for the inhalation pathway to a child's lung (Table 3.3-18).

Therefore,

$$Q_i = \frac{1.5 \text{ mrem/yr}}{(7.06E6 \text{ mrem/yr/}\mu\text{Ci/m}^3)\ (7.5E\text{-}6 \text{ sec/m}^3)}$$

$$Q_i = 2.83E\text{-}2\ \mu\text{Ci/sec}$$

The maximum oil flow rate for burning oil in the incinerator is six gal/min. The maximum flow rate in cc/sec is calculated as follows:

(6 gal/min) (min/60 sec) (3785 cc/gal) = 378.5 cc/sec

The main fuel oil tank for the incinerator shall not contain more than 20% by volume of slightly contaminated oil. Therefore, the maximum waste oil flow rate would be 1.2 gal/min in lieu of 6 gal/min. For additional conservatism, the flow rate will equal 6 gallons/min for burning oil.

The maximum concentration (μCi/cc) of waste oil to be burned can be determined by the following equation:

$$\text{Max. Conc. } (\mu\text{Ci/cc}) = \frac{Q_i}{f}$$

Where:

f = waste oil flow rate 378.5 cc/sec

$$\text{Max. Conc. } (\mu\text{Ci/cc}) = \frac{2.83E\text{-}2\ \mu\text{Ci/sec}}{378.5 \text{ cc/sec}} = 7.48E\text{-}5\ \mu\text{Ci/cc}$$

The maximum concentration of waste oil to be incinerated is limited to 7.48E-5 μCi/cc which is 0.1% of 10CFR20 limits. This shall be controlled by procedures, sampling, and analyzing the waste oil prior to burning. Limiting the concentration to an insignificant release rate meets the intent of ODCM Specification 7.3.7.

II. <u>Compliance with 10CFR50, Appendix I for I-131, I-133, Particulates and Tritium</u>

ODCM Specification 7.3.9.c limits the burning of waste oil in the incinerator to 0.1% of two times 10CFR50, Appendix I (two-unit site). For conservatism, burning of waste oil shall be limited to 10CFR50, Appendix I.

Therefore:

0.001 x 7.5 mrems = 0.0075 mrem to any organ during any calendar quarter

0.001 x 15 mrems = 0.0150 mrem to any organ during any calendar year

The cumulative dose for the above yearly limit is determined by the following equation:

$$0.015 \text{ (mrem)} \leq 3.17\text{E-}8\ [(R_{i_G} + R_{i_M} + R_{i_V} + R_{i_B})\ (D / Q_{tb})\ (Q_{i_{oil}}) + (R_{i_I})\ (X / Q_{tb})\ (Q_{i_{oil}})]$$

The above equation can be further reduced as follows:

$$0.015 \text{ (mrem)} \leq 3.17\text{E-}8\ [(Q_{i_{oil}})[(R_{i_G} + R_{i_M} + R_{i_V} + R_{i_B})\ (D / Q_{tb}) + (R_{i_I})\ (X / Q_{tb})]]$$

The activity in the slightly contaminated waste oil is long lived fission, corrosion, and activation products. There is no Iodine-131 or Iodine-133 in the oil. Using the most conservative radionuclides (Cesium-134, Cesium-137, and Cobalt-60), a quarterly and yearly activity can be calculated for all organs and all age groups for the summation of all pathway doses. The maximum activity to be released for a calendar quarter and calendar year can be determined as follows:

$$Q_{i_{oil}} = \frac{0.015}{(3.17\text{E-}8)[R_{i_G} + R_{i_M} + R_{i_V} + R_{i_B})(D / Q_{tb}) + (R_{i_I})(X / Q_{tb})]}$$

where:

3.17E-8	=	The inverse of the number of seconds in a year
R_{i_G}	=	Dose factor for an organ for radionuclide i for the ground plane exposure pathway, mrem/yr per μCi/sec per m^{-2}, Table 3.3-1

R_{i_M}	=	Dose factor for an organ for radionuclide i for the cow milk pathway, mrem/yr per μCi/sec per m^{-2}, Tables 3.3-8, 3.3-9, 3.3-10, and 3.3-11, there is no goat milk production within 5 miles of site
R_{i_V}	=	Dose factor for an organ for radionuclide i for the vegetable pathway, mrem/yr per μCi/sec per m^{-2}, Tables 3.3-2, 3.3-3 and 3.3-4
R_{i_B}	=	Dose factor for an organ for radionuclide i for the meat pathway, mrem/yr per μCi/sec per m^{-2}, Tables 3.3-5, 3.3-6, and 3.3-7
R_{i_I}	=	Dose factor for an organ for radionuclide i for the inhalation pathway, mrem/yr per μCi/m^3, Tables 3.3-16, 3.3-17, 3.3-18, and 3.3-19
D/Q_{tb}	=	Annual average deposition for release from the Turbine Buildings, NE Sector
	=	1.9E-8 m^{-2}, most restrictive, from Appendix A, Table A-3
X/Q_{tb}	=	Annual average relative concentration for releases from the Turbine Buildings, SSE sector
	=	7.5E-6 sec/m^3, most restrictive, from Appendix A, Table A-1

The most restrictive age group and organ is Child Bone. The maximum release in any calendar year is 436 μCi. The maximum release in any calendar quarter is 436 x 1/2 = 218 μCi.

All slightly contaminated waste oil that is to be burned in the incinerator shall be controlled by procedures demonstrating that the quarterly limit (218 μCi) and yearly limit (436 μCi) are not exceeded. Doubling these μCi limits shall be used for calculating percent of technical specification limit in the semiannual report. At the end of each calendar year a dose assessment will be made using the NRC approved computer code GASPAR.

Summary of Co-60, Cs-137, and Cs-134
μCi Release Yearly Limit by Age Group and Organ

	T Body	GI-Tract	Bone	Liver	Kidney	Thyroid	Lung	Skin
Co-60								
Adult	1,132	965	1,158	1,147	1,158	1,158	1,044	988
Teen	1,120	977	1,158	1,142	1,158	1,158	999	988
Child	1,091	1,037	1,158	1,134	1,158	1,158	1,025	988
Infant	1,153	1,151	1,158	1,155	1,158	1,158	1,070	988
Cs-137								
Adult	1,179	2,349	1,112	928	1,564	2,418	2,053	2,075
Teen	1,278	2,333	826	678	1,292	2,418	1,812	2,075
Child	1,474	2,349	436*	453	1,001	2,418	1,603	2,075
Infant	1,910	2,390	575	509	1,205	2,418	1,714	2,075
Cs-134								
Adult	1,063	3,471	1,623	1,125	1,857	3,652	2,766	3,129
Teen	1,163	3,452	1,233	649	1,478	3,652	2,337	3,129
Child	1,441	3,517	672	442	1,120	3,652	2,017	3,129
Infant	2,258	3,594	851	513	1,417	3,652	2,217	3,129

*Most restrictive quantity in μCi resulting in 0.1% of 10CFR50 Appendix I limit.

III. Compliance with 40CRF190

The annual (calendar year) dose or dose commitment to any MEMBER OF THE PUBLIC due to releases of radioactivity and radiation from uranium fuel cycle sources shall be limited to less than or equal to 25 mrem to the total body or any organ except the thyroid, which shall be limited to less than or equal to 75 mrem. Incinerating waste oil is limited to 0.015 mrem to the most critical organ (including the whole body) using all pathways. 40CFR190 is automatically complied with since 0.015 mrem is ≤ 0.1% of 25 mrem.