Official Transcript of Proceedings ACRST-3277

NUCLEAR REGULATORY COMMISSION

ORIGINAL

Title: Advisory Committee on Reactor Safeguards
511th Meeting

Docket Number: (not applicable)

PROCESS USING ADAMS
TEMPLATE: ACRS/ACNW-005

Location: Rockville, Maryland

Date: Friday, April 16, 2004

Work Order No.: NRC-1416 Pages 1-117

NEAL R. GROSS AND CO., INC.
Court Reporters and Transcribers
1323 Rhode Island Avenue, N.W.
Washington, D.C. 20005
(202) 234-4433

TR04

1 UNITED STATES OF AMERICA

2 NUCLEAR REGULATORY COMMISSION

3 + + + + +

4 ADVISORY COMMITTEE ON REACTOR SAFEGUARDS

5 (ACRS)

6 511th FULL COMMITTEE MEETING

7 + + + + +

8 FRIDAY,

9 APRIL 16 , 2004

10 + + + + +

11 ROCKVILLE, MARYLAND

12 The Committee met at the Nuclear Regulatory

13 Commission, Two White Flint North, Room T2B3, 11545

14 Rockville Pike, at 8:30 a.m., Dr. Mario V. Bonaca,

15 Chairman, presiding.

16 COMMITTEE MEMBERS PRESENT:

17 MARIO V. BONACA, Chairman

18 GRAHAM B. WALLIS, Vice-Chairman

19 STEPHEN L. ROSEN, At-Large

20 F. PETER FORD, Member

21 THOMAS S. KRESS, Member

22 DANA A. POWERS, Member

23 VICTOR H. RANSOM, Member

24 WILLIAM J. SHACK, Member

25 JOHN D. SIEBER, Member

1 NRC STAFF PRESENT:

2 RUSS ARRIGHI GREGORY SUBER

3 HANS ASHAR CHENH-IH WU

4 STEWART BAILEY MATTHEW MITCHELL

5 WILLIAM BATEMAN SCOTT PWALL

6 JENNIFER BOBIAK I. RAYAN

7 DAVE CULLISON ERIC REICHELT

8 BARRY ELLIOT

9 JOHN FAIR

10 DANIEL FRUMKIN

11 RICH GUZMAN

12 M. HARTZMAN

13 STEVEN JONES

14 WILLIAM KOV

15 P.T. KUO

16 JAMES LAZEVNICK

17 ARNOLD LEE

18 SAM LEE

19 Y.C. (RENEE) LI

20 LOUISE LUND

21 JOHN S. MA

22

23

24

25

1 I-N-D-E-X

P-R-O-C-E-E-D-I-N-G-S

8:29 a.m.

CHAIRMAN BONACA: Let's start. First, the meeting is being kept, and it is requested that the speakers use one of the microphones, identify themselves and speak with sufficient clarity and volume so that they can be readily heard.

I would like to remind you that during today's lunchtime, I believe at 12:45, Mr. Szabo of OGC will provide ethics refresher training to the members. Also, representatives of the Office of Administration will brief the members on computer security issues and other administrative matters.

With that, let's move on to the first item on the agenda. I believe that the first item is the license renewal application for the Ginna Nuclear Power Plant. And with that, I turn to Mr. Kuo.

MR. KUO: Thank you, Dr. Bonaca, and good morning. For the record, I'm P.T. Kuo, the Program Director for the License Renewal and Environmental Impacts Program. On my right is Dr. Sam Lee, Section Chief for the License Renewal, and the far right is Russ Arrighi. He's the Project Manager for Ginna Safety Evaluation Report. And Russ is going to make the first staff presentation today.

1 I might add here that this is the last day
2 for Russ being with us. He's getting a promotion in
3 the Office of Enforcement, so the net result is that
4 we are going to lose another experienced person.
5 Sorry about that. And with that, I'd really like to
6 the presentation first over to the Applicant, then
7 Russ will follow.
8 MR. WROBEL: Okay. Thank you. Hello. My
9 name is George Wrobel. I'm the License Renewal
10 Project Manager with Dave Wilson, our licensing and
11 principal contributor to the report, Joe Widay, our
12 Plant Manager, and Gerry Geiken, our Materials
13 Engineer.
14 We had a Subcommittee meeting on November
15 4, 2003. Many of the agenda items are similar, but we
16 have updates on most of them. So we'll be going
17 through all of those. I don't think you need to read
18 through those. We can go on to the next page.
19 Okay. As you probably well know, Ginna is
20 Westinghouse two-loop 1520 megawatt PWR. It was
21 originally licensed in 1969, so it's the oldest PWR
22 operating in the country, and we will be the first
23 plant to actually implement license renewal, at least
24 from a PWR standpoint.
25 We had an initial power uprate from 1300

1 megawatts to 1520 megawatts in 1972, and we remember
2 the Systematic Evaluation Program. SEP was a
3 reevaluation of the plant against the standard review
4 plan at that time, which has been updated since then
5 but it was a very thorough review. Two topics were
6 looked at. I've got another slide on that.
7 CHAIRMAN BONACA: I have a question on
8 that. Oh, you have a slide later on?
9 MR. WROBEL: I have a slide on SEP.
10 Hopefully it will answer most of them, if not more.
11 Anyway, it ended up resulting in converting our
12 provisional operating license to a full-term operating
13 license in 1984.
14 The other thing that we've done since then
15 we did have our construction permit operating license
16 recaptured. That was a 41-month construction tenure
17 back in those days. We got that back in 1991. That's
18 probably what the new advanced designs will be like
19 too.
20 We did convert to improve standard tech
21 specs in 1996. Currently, all of our performance
22 indicators and inspection findings are green, and, as
23 you probably well know, we have a plant sale that's
24 going to be consummated within the next couple or
25 months -- we hope, we believe.

1 Just a little more on SEP, and then you
2 can ask more questions. It was basically all of the
3 older power plants at the time, about half of whom are
4 still with us, lost a couple of plants that were
5 newer, like Palisades and Ginna, that had original
6 operating licenses were administered under the
7 auspices of the Systematic Evaluation Program. There
8 were a total of 92 very diverse topics that were
9 reviewed at that time, and we really ended up with
10 what I think is actually a very useful product. We
11 have SERs on many of the current topical issues, so
12 that we actually have a current licensing basis that's
13 easily retrievable. I think that really helped us
14 during our license renewal application. We were able
15 to find our CLP pretty readily, and that was a big
16 help.
17 Some of the major issues that we looked at
18 were high energy line breaks, both inside and outside
19 containment, and the separation that was required
20 because of that. We made certain changes in the
21 seismic stability of the Plant, which helped us with
22 our IPEEE submittals as part of the RA. Tornado
23 protection and containment isolation valves and the
24 arrangements for the GDC, we didn't meet it explicitly
25 but we were able to review it against the criteria and

1 show we have comparable safety.

2 CHAIRMAN BONACA: Did you have many

3 physical changes in the Plant because of SEP?

4 MR. WROBEL: We had probably at that time

5 I'll say $20 million, give or take, physical changes.

6 CHAIRMAN BONACA: Well, I was thinking

7 specifically about your auxiliary feed water system

8 with those five trains. I mean how come you've got

9 those --

10 MR. WROBEL: That was actually done as

11 part of the high energy line break criteria that was

12 actually implemented prior to SEP, the O'Leary Letter

13 of 1972 or so.

14 CHAIRMAN BONACA: Okay.

15 MR. WROBEL: Where we had the steam line

16 and the feed water line in the same building as all

17 three aux feed water pumps that we had at that time.

18 So because they were not environmentally qualified for

19 that, we separated them. We had the standby auxiliary

20 feed water system that's totally independent of the

21 regular normal auxiliary feed water system.

22 CHAIRMAN BONACA: How separate is it,

23 physically?

24 MR. WROBEL: It's a separate building, and

25 it goes through a separate building, and it enters the

1 feed water line through the separate penetration
2 inside containment --
3 CHAIRMAN BONACA: And it's separate also
4 the controls and electrical?
5 MR. WROBEL: The only thing that's
6 comparable is it runs off the same power supplies, but
7 there's an interlock so that you can only run aux
8 speed or standby aux speed. You can't run them both
9 at the same time.
10 CHAIRMAN BONACA: Does that kind of
11 ability provide you help, I imagine, for some of the
12 external events?
13 MR. WROBEL: All of them.
14 CHAIRMAN BONACA: What about fire?
15 MR. WROBEL: Well, it certainly helps on
16 fire, because if we have a fire in the intermediate
17 building that takes out auxiliary feed water, we have
18 standby auxiliary feed water. Again, I think the only
19 commonality that we have are buses 14 and 16, which
20 are the power supplies to them. They have the same
21 power supplies. But buses 14 and 16 are separated in
22 terms of fire zones, so there's a lot of separation --
23 physical separation for auxiliary feed water at our
24 plant. You can use it as part of our recovery
25 methodology, both for seismic, tornadoes and flooding

1 and high energy line breaks. So it's been actually a
2 very useful modification.
3 MEMBER POWERS: You mentioned your IPEEE.
4 Can you give me a feeling for where you stood for
5 IPEEE risk?
6 MR. WROBEL: I don't have the actual
7 number for IPEEE risk. You mean for seismic? I think
8 internal and external are about half and half. So
9 since our total is 4E to the minus 5, our IPEEE is
10 probably 2E to the minus 5. Now, these mods for SEP
11 were done prior to 8820 Supplement 5 coming out, so
12 these were already -- the mods were already according
13 our initial IPEE model.
14 CHAIRMAN BONACA: You said your total CDF
15 is 4E to the minus 5?
16 MR. WROBEL: Yes.
17 MR. ARRIGHI: This is Russ Arrighi. I
18 checked on those numbers. The total CDF is about
19 four. It's 3.977E to the minus 5 per year, and the
20 fire is the single largest category contributor to the
21 risk profile. It's about 28, 29 percent of the total
22 risk profile.
23 CHAIRMAN BONACA: And did you have a full
24 PRA?
25 MR. WROBEL: We have a full PRA now. We

1 do not have a seismic PRA, but we have the shutdown
2 PRA and the internal and fire and level 1, 2 and 3.
3 MEMBER ROSEN: Does that 4 include
4 shutdown?
5 MR. WROBEL: Four includes shutdown.
6 CHAIRMAN BONACA: I think that's very low.
7 MEMBER POWERS: And fire is 30 percent of
8 this?
9 MR. WROBEL: About 30 percent, yes.
10 CHAIRMAN BONACA: I'm not surprised.
11 MEMBER POWERS: What did you say?
12 CHAIRMAN BONACA: I'm not surprised.
13 MEMBER ROSEN: I'm surprised it's as low
14 as that.
15 CHAIRMAN BONACA: Yes.
16 MEMBER ROSEN: With external, internal and
17 shutdown included for an older plant. Getting to four
18 is -- I'd be interested in tracking the numbers, but
19 I don't believe more than that.
20 MR. WILSON: This is Dave Wilson, RG&E.
21 Part of the lessons that we learned in doing the IPEEE
22 process and the PSA process drove some plant
23 modifications to make those numbers lower. For
24 instance, we learned that we had an internal flood
25 risk contributor that was very high with respect to

1 our batteries, and we ended up relocating pipes. So
2 we used our PSA pretty proactively when it was
3 developed and actually modified systems that we could
4 reasonably modify to lower our numbers from the
5 original values.
6 MEMBER ROSEN: Well, that's a good
7 explanation.
8 CHAIRMAN BONACA: Yes. I would expect
9 those feed aux system would give you a lot of help.
10 I mean I know it because I was involved with a plant
11 which was in the SEP and did not have that system, and
12 every time we looked at what an additional aux feed --
13 traditional aux feed train would do for us, we were
14 solving all our problems.
15 MR. WILSON: Yes. From our perspective,
16 sir, it was interesting that our sister plants in
17 Switzerland, the Beznau units, actually came out and
18 visited our plant to examine our standby auxiliary
19 feed water system, because they had installed a
20 dedicated shutdown system which included the high
21 pressure injection. When they did their risk models,
22 they asked the same questions: "Why are your risk
23 models lower than ours and our plants are, although
24 not identical, essentially, technically, designed the
25 same?" And the answer was standby auxiliary feed

1 water. It was the decay heat removal portions.

2 CHAIRMAN BONACA: Sure.

3 MR. WILSON: And they actually sent one of

4 their presidents and some of the engineers out to look

5 to see how we configured this with the physical

6 independence and distance and things to -- I don't

7 know what the results of that were, though, sir,

8 whether or not they go further and change, but they

9 were interested enough to come and look from

10 Switzerland.

11 MR. WROBEL: Other major changes that

12 we've made, at least since 1996, have been --

13 certainly, you've heard about some of the earlier ones

14 in that. We replaced our steam generators in 1996.

15 Those steam generators have about a 20 percent higher

16 tube surface area, so we built in quite a bit of

17 margin in the steam generator replacement.

18 We were one of the three plants to do

19 baffle-barrel bolt inspections in 1999, and we found

20 very little stress corrosion cracking in those bolts.

21 I think the ones that we actually found quantified, we

22 will quantify less than about one percent of the bolts

23 that actually had damage there.

24 Did our reactor vessel head inspection in

25 1999, and then we replaced it in 2003. So we've been

1 working very hard on Alloy 600 minimization. The only
2 Alloy 600 we have that's part of reactor coolant
3 pressure boundary now are the bottom-mounted
4 instrumentation nozzles. There's no other pressure
5 boundary that's Alloy 600. There are a couple of the
6 locations that are Alloy 600, the radial support plugs
7 and tubesheet, RCS cladding, but there's no other
8 areas.
9 MEMBER ROSEN: Have you had a look at your
10 pressurizer lately?
11 MR. WROBEL: I personally haven't, but I
12 think we have. There have been a lot of issues on the
13 instrumentation -- the bottom heater tubes or the
14 heater nozzles. We have not seen any indications.
15 Ours are stainless steel.
16 MEMBER SIEBER: Right. The only concern
17 you have is the weld, right, stainless to the base
18 model?
19 MR. WROBEL: Yes.
20 MEMBER ROSEN: That's stainless but you've
21 also looked and didn't see anything.
22 MR. WROBEL: we haven't seen anything,
23 but, Joe, do you know if we've had any detailed NDE up
24 there or what, physically or visually?
25 MR. GEIKEN: Well, we've done visuals by

1 -- this is Gerry Geiken from Ginna Station -- we've
2 done visual inspections. In fact, this last outage we
3 did an extensive RT and UT of all the tophead nozzles
4 and the surge line nozzle of the pressurizer. I
5 believe we also looked at some of the penetrations
6 that were exposed when we removed insulation, and
7 we've seen nothing there, no ominous leakage at all.
8 There's no Alloy 600 in our pressurizer, weld metal or
9 base metal.
10 CHAIRMAN BONACA: If I remember, you also
11 replaced the control rod package.
12 MR. WROBEL: As part of the reactor vessel
13 head, yes.
14 CHAIRMAN BONACA: Is it normal, I mean
15 when you replace the head?
16 MR. WROBEL: Well, they were 30, 35 years
17 old and --
18 CHAIRMAN BONACA: Okay. So you --
19 MR. WROBEL: -- we're planning on another
20 at least 25 to 45 years of operation. You haven't
21 seen our next application yet, but you will see it.
22 (Laughter.)
23 MR. WROBEL: In 2009, we'll be here again.
24 We did do an extensive evaluation or
25 inspection of our lower head, the lower head nozzles

1 this past outage. Did not find any evidence of
2 leakage, no boron, at least nothing from the
3 penetration.
4 MEMBER SHACK: But you can do a bare metal
5 inspection of your bottom?
6 MR. WROBEL: Yes. We can and we will
7 continue doing them. Is it going to be every outage,
8 Gerry?
9 MR. GEIKEN: At this point, every outage.
10 CHAIRMAN BONACA: At the Subcommittee, you
11 showed us some pictures of it. Do you have them with
12 you?
13 MR. WROBEL: We do have the pictures. We
14 didn't find any really better ones than we had, but we
15 can look at them again.
16 MEMBER ROSEN: What is the T-hot for this
17 plant again, remind me?
18 MR. WROBEL: Five-ninety. It's pretty low
19 right now. About 592, 590, yes.
20 CHAIRMAN BONACA: It's low.
21 MR. WROBEL: It was 601 before we did the
22 steam generator replacement, and we got it down to
23 590.
24 MEMBER SIEBER: Are you anticipating any
25 kind of a power uprate?

1 MR. WROBEL: Yes. You're reading ahead.
2 Yes, we have some discussion of a potential power
3 uprate that we're discussing, and we do have some
4 information on that.
5 MEMBER SIEBER: Well, you've got a lot of
6 surface.
7 MR. WROBEL: Yes. Our T-hot will go back
8 up to probably 603 or so, which is what it was before.
9 Still not way high.
10 MEMBER SIEBER: So you're talking about
11 five or six percent.
12 MR. WROBEL: Seventeen?
13 MEMBER SIEBER: Seventeen percent?
14 MR. WROBEL: Seventeen percent.
15 MEMBER SIEBER: What's TeV?
16 MR. WROBEL: TeV will be -- well, right
17 now it's 561. It's going to go up to 573.5, which is
18 what it was before steam generator replacement. We
19 built in a lot of margin when we put these generators
20 in, not necessarily for operate or for renewal but it
21 certainly is working for both of them.
22 CHAIRMAN BONACA: So tell us what we're
23 looking at, water penetration on the bottom?
24 MR. WROBEL: Yes. Gerry, this is your
25 time to shine.

1 MR. GEIKEN: That's the penetration as it
2 enters the Inconel pad, the Alloy 82/182 pad, that's
3 welded around every penetration on the bottom head of
4 the vessel. The entire bottom head, in fact the
5 entire external surface of the vessel is painted with
6 zinc-rich paint.
7 We did sample some evidence of white
8 deposits that we observed running down the side of the
9 vessel. They were from leakage from above. And all
10 of those were determined isotopically to be not within
11 the recent past.
12 MR. WROBEL: And they weren't from the
13 bottom nozzles either.
14 MR. GEIKEN: We saw nothing around any of
15 the bottom nozzles that indicated leakage.
16 VICE-CHAIRMAN WALLIS: And that purplish
17 hue is from what, a coating of some sort, in the other
18 figure?
19 MR. GEIKEN: Yes. That's zinc-rich paint.
20 VICE-CHAIRMAN WALLIS: That's the paint.
21 MR. GEIKEN: That's zinc paint. It's
22 Carbon Zinc 11.
23 MR. WIDAY: And the benefit we have --
24 this is Joe Widay, Plant Manager -- the benefit we
25 have there is you notice the build-up of the weld

1 material there allows for a natural flow of moisture.
2 If you did have a leak from above, it typically
3 wouldn't migrate into that crevice area there. So it
4 does keep the two systems separate so any leakage that
5 we may have had from above in the refueling process
6 wouldn't evidence itself.
7 MEMBER ROSEN: Because, Joe, it drips off
8 at the lip, is that what you mean?
9 MR. WIDAY: That's correct, yes.
10 MR. WROBEL: I think you have this. This
11 is going to be an every 18-month inspection. We are
12 on Slide 4.
13 Again, during the past outage, we did a
14 detailed review of our sump for any sump issues. We
15 found a couple of areas that -- a couple of openings
16 that were larger than we had anticipated. They were
17 fixed during the outage and modifications were made.
18 MEMBER ROSEN: Did you look at the other
19 sump?
20 MR. WROBEL: Yes, sir.
21 MEMBER ROSEN: This says Sump B.
22 MR. WROBEL: Oh, Sump B is the ECCS
23 recirculation sump. Sump A is our normal sump, and we
24 do -- actually, we did a detailed review of the Sump
25 A this year as part of the structure monitoring

1 program.

2 MR. WILSON: Sump alpha is the sump we had

3 to enter to do the bottom head inspections.

4 VICE-CHAIRMAN WALLIS: Any unusual

5 material in those sumps?

6 MR. WILSON: Not anymore.

7 (Laughter.)

8 MR. WILSON: There was some boric acid on

9 the bottom of the -- on the floor there that was

10 cleaned up, and there were --

11 MEMBER POWERS: Sumps lined?

12 MR. WILSON: Say again, sir?

13 MEMBER POWERS: Are the sumps lined?

14 MR. WILSON: Yes, sir, although the bravo

15 sump, the recirculation sump is lined underneath the

16 concrete, it's got a concrete facing on it.

17 MEMBER POWERS: Amazing. How thick?

18 MR. WILSON: I don't know what the

19 thickness is, but I'm thinking three inches.

20 MEMBER POWERS: Okay.

21 MR. WILSON: And then metal and then the

22 actual concrete.

23 MEMBER ROSEN: And why was that done?

24 MR. WILSON: Say again, sir?

25 MEMBER ROSEN: Why was that construction

1 done that way? It seems unusual to --

2 MR. WILSON: I'm personally not certain.

3 I don't know.

4 MR. WROBEL: The whole containment floor

5 is done that way. It's concrete, then steel, then

6 concrete. Three feet, three-eighths-inch, then three

7 feet. So the actual leakage -- I guess the concrete

8 is for structural stability, and then you've got the

9 leakage barrier is actually the steel, and then you

10 have more reinforcement just for structural strength.

11 I didn't bring my slide.

12 MEMBER POWERS: I'm not absolutely

13 certain, Steve, but I think it was popular

14 construction at the time, and I think it was

15 contamination control.

16 MEMBER ROSEN: I see.

17 MR. WROBEL: Just very briefly, we're also

18 looking at an uprate. The uprate would be consistent

19 with what the Kewanee Plant is currently uprated to,

20 which is 1775. They were just approved within the

21 last couple of months. We basically have the same

22 NSSS system and Kewanee does right now, and so even

23 our uprate would be a 17 percent uprate, which would

24 be an EPU and we get to visit you again. It's really

25 not much different than the Kewanee uprate which was

1 more of a stretch.

2 VICE-CHAIRMAN WALLIS: How much EPU?

3 MR. WROBEL: Seventeen percent.

4 VICE-CHAIRMAN WALLIS: Seventeen.

5 MR. WROBEL: Fifteen to 20.

6 VICE-CHAIRMAN WALLIS: So it's

7 substantial.

8 MR. WROBEL: Substantial uprate but not

9 any different than Kewanee's currently experiencing.

10 We've had a lot of discussion with our sister unit

11 there. Our steam generators that we've replaced now

12 are the same as -- they're pretty much the same as

13 their current ones. We have a lot of surface area

14 there.

15 I thought I'd get actually into the license

16 renewal application for a while now. We did the -- it

17 was about a three and a half year effort. I think we

18 started in 2000. Primarily, it was in-house. We had

19 matrixed staff, some much more dedicated than others

20 I mean in terms of time. Certainly, all of them

21 dedication. We did use contractors where we needed to

22 where we didn't have the expertise in-house, like

23 Framatome did our reactor vessel work, Westinghouse

24 did some of our entry plus work for TLAAs;

25 Constellation, environmental. We did use the guidance

1 of 9510, standard review for plant format, and we're
2 the third plant to use GALL, so we had our GALL
3 experience.
4 All of the interactions were good,
5 particularly the inspections and the audits, the
6 regional and the NRR people that came to the site.
7 That was a very good interaction. The processes,
8 procedures all worked through well. All the
9 milestones were met, everything was done on time, so
10 we did not have any issues at all with the inspection
11 methodology.
12 What resulted out of the license renewal
13 application, basically, were programs and commitments.
14 I'll talk a little bit more about that. But once we
15 stoked and screened everything in, then really the
16 hard part is getting all the programs implemented, and
17 that's what we're working on right now.
18 Some of the major issues that came out of
19 license renewal that may be an update from the
20 Subcommittee meeting that we had, we did finish all of
21 our 50.49 calculations, all the EQ calculations
22 extending the life of electrical equipment from 40
23 years to 60 years. Having completed, documented and
24 --
25 CHAIRMAN BONACA: The PLAs?

1 MR. WROBEL: All the PLAs are complete of
2 the equipment that we decided we would extend to 60
3 years. There's some items that we're going to
4 replace, so we didn't complete the PLA on those.
5 As the staff will show you later, our
6 upper shelf energy for Reg Guide 1.99 Rev 2 is
7 anticipated to be below 41 foot pounds using that
8 methodology. We knew that going in, and so we had
9 Framatome perform at equivalent margins, fracture
10 mechanics plastic -- it's on the next slide --
11 elastic-plastic fracture mechanics analysis for the
12 limiting beltline weld. Even though we don't meet the
13 50 foot pounds, the Appendix K criteria for Section
14 11, which is the alternative of Appendix G analysis
15 that's allowed, shows, as you can see, substantial
16 margin of either greater than five or greater than
17 three for the different transient levels and accident
18 levels. So we feel that we have significant margin
19 even though we don't meet the 41 foot pounds for upper
20 shelf energy.
21 MEMBER SHACK: Did you project at 80 or
22 life?
23 MR. WROBEL: I have that for PTS if you'd
24 like. Certainly, I think with a factor of two to six,
25 Gerry, I'm sure we're going to be greater than 1.0 at

1 80, right? Say yes.

2 MR. GEIKEN: Yes. Bear in mind -- this is

3 Gerry Geiken, these analyses are going to have to be

4 redone for uprate.

5 MR. WROBEL: Yes.

6 MR. GEIKEN: We'll have higher fluences.

7 MR. WROBEL: Also for a station blackout,

8 one of the issues we talked about at the Subcommittee

9 was the scope and the off-site power cables, that

10 power Buses 17 and 18 are in scope. We did add those

11 into scope. I think Russ is going to go over that in

12 a little bit more detail.

13 So I think we've completed all the major

14 issues, all the TLAAs that we had anticipated to do

15 that for 60 years. And even for power uprate we did

16 do the PTS calculations for power uprate for 60 years.

17 Actually, we did them for 80 years too. And there's

18 significant margin in that area also. Even at power

19 uprate conditions for 60 years, we're at 276 degrees

20 instead of 300, so we still have quite a bit of margin

21 on PTS.

22 MEMBER SHACK: Now, do you run a low flux,

23 I mean low leakage core?

24 MR. WROBEL: At this point, yes. We've

25 been running a low leakage core since about the mid-

1 80s, mid-80s to late-80s.

2 MR. GEIKEN: Mid-80s.

3 MR. WROBEL: Mid-80s. That is going to

4 change somewhat. We don't know what the uprate

5 calculation's going to be exactly. We've done some

6 bounding calculations which are less -- there's going

7 to be more leakage for a bigger core, but at least the

8 calculations we've done so far indicate that we still

9 have substantial margin even with the uprate,

10 otherwise we wouldn't do it.

11 Programs, we had a total of 34 programs

12 that we implemented or credited for license renewal.

13 Four of them were new programs that we obviously

14 didn't have before. That's why I call them new.

15 Thirty were existing programs, and many of them were

16 consistent with GALL. We did take exception to

17 several of the programs where we were, like the Kaplan

18 cooling water or diesel fuel oil. We took a few

19 exceptions. They were all justified with the staff.

20 We are either making or have made enhancements to many

21 of the other programs for license renewal issues that

22 came up. Most of those are including additional

23 equipment and scope or structural monitoring, systems

24 monitoring, preventive maintenance. So a lot of it is

25 scoping issues that have been brought in. The actual

1 methodology, the walkdowns that we do, are basically
2 the same except we have more detailed worksheets, and
3 I think we've made a lot of improvements in that area
4 there.
5 We have implemented pretty much all except
6 ten of the programs. All procedures have been
7 reviewed but not completely signed off for license
8 renewal, but we anticipate most of the programs being
9 implemented well, well before 2009. We're not waiting
10 for 2009 to implement the programs. We give more
11 detail on the next slide.
12 We have 37 commitments that are in SER
13 Appendix A. The schedule is in there. The 122
14 individual commitments include the 37, and those are
15 in much more detail. For example, we committed to
16 write program basis documents for every program. All
17 except three, I believe, have been signed off already,
18 so we have 34 other commitments match the one up
19 there. Many of the other commitments have to do with
20 periodic inspections, and we have spaced out the
21 inspections. We've already done some of them in 2003.
22 We continue spacing them out till 2009. We're not
23 going to do all the inspections right in 2009. So
24 we've doing them all along. We have had some success.
25 We've already, like I say, done some of them in 2003,

1 and all of the commitments are in our commitment
2 action tracking system. Most of them have been
3 assigned to individual plant engineers already. A
4 couple of them that we haven't completed yet, there's
5 a couple of commitments that we will complete after
6 2009 just because of the timing on it. We have a
7 couple of structural integrity tests that we said we
8 would commit to, and those are, I think, scheduled for
9 -- I think the first one is scheduled 2015, and then
10 the standard sprinkler had 50-year either replacement
11 or a detailed review at 50 years, and 50 years is
12 going to come up after 2009, so we'll do it at that
13 point. Although we've been replacing sprinklers all
14 along, so we have a pretty good feel for how good they
15 are.
16 We do have a few modifications. There's
17 some change anticipated due to the power uprate.
18 Currently, we have a commitment to do our reactor
19 vessel surveillance -- pull the next surveillance
20 capsule in 2005, because that's when we had calculated
21 we would get to the 60-year fluence. If we uprate,
22 then the 60-year fluence we won't get to in 2005, so
23 we're not going to pull the capsule. So we've
24 currently calculated either the 2008 or 2009 as when
25 we get to the equivalent 60-year fluence, so we'll

1 revise that commitment to take the capsule out at that
2 point. We'll have one capsule left that we'll keep in
3 the core for the 80 years in accordance with ASTME
4 185. We'll be doing that, and I believe that's going
5 to be a license condition anyway, but we're going to
6 do it anyway.
7 MEMBER SHACK: Have you done any piping
8 replacement as part of your FAC Program --
9 MR. WROBEL: Yes.
10 MEMBER SHACK: -- in your secondary
11 system?
12 MR. WROBEL: Done extensive either piping
13 replacement or coating it with chromium.
14 MR. GEIKEN: It's been replacement with
15 chromium aluminum or chrome moly of plain carbon steel
16 components.
17 MEMBER SHACK: Any trouble with meeting
18 the welding requirements?
19 MR. GEIKEN: No. We do it all in-house.
20 All of it was done in-house.
21 MEMBER ROSEN: What components were
22 replaced? Give me a feel for where you made those
23 replacements.
24 MR. WROBEL: For our pre-separator tank?
25 MR. GEIKEN: Yes, that's a good example.

1 One of our pre-separator tanks.

2 MEMBER ROSEN: The moisture separator

3 tanks?

4 MR. GEIKEN: Pre-separator tanks.

5 MR. WIDAY: Our pre-separator tank is the

6 extraction steam coming off the high pressure turbine.

7 MEMBER ROSEN: It's wet, right?

8 MR. GEIKEN: It's wet.

9 MR. WIDAY: Yes.

10 MR. WIDAY: Another one, Gerry, was the

11 feed water regulating of bypass valves.

12 MR. GEIKEN: That's correct.

13 MEMBER ROSEN: Feed reg bypass valves?

14 MR. GEIKEN: That's correct.

15 MEMBER ROSEN: And the piping around the

16 bypass valves?

17 MR. GEIKEN: Right.

18 MR. WIDAY: The piping --

19 MEMBER ROSEN: Did you replace the valves

20 too?

21 MR. GEIKEN: Yes. Yes, I believe they

22 were replaced, yes.

23 MR. WROBEL: Try to do the last slide and

24 then some.

25 CHAIRMAN BONACA: Under programs, you

1 specifically pulled out the Fire Water System Program
2 --
3 MR. WROBEL: That's because it didn't add
4 up.
5 CHAIRMAN BONACA: -- as one having a lot
6 of exceptions and enhancements?
7 MR. WROBEL: Yes. Pulled that one out
8 because there are quite a few exceptions that we did
9 at plant-specific detail design analysis on what the
10 periodicity should be of the various inspections of
11 fire doors and seals. And we were able -- you know,
12 we did the design analysis, it was reviewed by NRC
13 inspectors, and we got concurrence that we would do on
14 that schedule a little bit different than what the
15 GALL called for. The enhancement was primarily we
16 didn't have a 50-year sprinkler head replacement, so
17 we put that in. I only called that one out separately
18 because they didn't add up and I got comments that
19 they didn't add up to 30, so we'd better explain it.
20 You guys were math wizards.
21 MEMBER ROSEN: I don't know about math
22 wizards but some of us can add.
23 MR. WROBEL: Yes. We go all out with math
24 wizards here.
25 Joe, plant ownership, do you want to make

1 any --

2 MR. WIDAY: Sure. With the slide up

3 there, if I can speak back here since I've got the

4 microphone in front of me. First of all, if you're

5 aware that in November of 2003 is when we formally

6 entered contract negotiations for the sale of the

7 plant, and the successful bidder was Constellation

8 Generation Group. As you're well aware, Constellation

9 is well known in the industry as one of the key

10 players with their overriding principles of safe

11 operation of a facility, and we've heard that message

12 loud and clear from them already in town meetings that

13 they've attended and make sure that they reinforce

14 that message to us.

15 And we are looking excitedly towards the

16 transfer of ownership here. The transfer of ownership

17 is contingent on two major milestones. One of them is

18 in the Public Service Commission arena and the Section

19 70 proceedings that are currently ongoing. Section 70

20 is transfer and sale of the asset, so that's got to

21 get approved through the Public Service Commission.

22 And then the second one is the initiative we have

23 ongoing here today with the license renewals. So two

24 of those issues have to come together for the final

25 consummation of the sale of the Plant.

1 I'd like to talk a little bit about the
2 benefits that we saw in the license renewal process,
3 because just the formality of applying for the license
4 and going through that process there's a lot of side
5 benefits that we saw come out of that. First of all,
6 there's the investment in the future here, obviously.
7 But that wasn't something that occurred just as a
8 result of the license renewal. Our Life Cycle
9 Management Program already was well underway to help
10 support the license renewal process, evidenced by
11 1996, the replacement of our steam generators. That
12 was a $110 million undertaking by the Corporation with
13 the intent that we wanted to make sure that the Plant
14 continues to runs safely. Obviously, a side benefit
15 of that is that it did position us for a license
16 renewal, which we formally engaged in, as George
17 pointed out, in the year 2000. So that was definitely
18 we saw a benefit there.
19 What it also -- and I'm not sure if this
20 was the chicken or the egg, which came first on -- but
21 the ability for us to retrieve our records. I think
22 Russ pointed out earlier in the introductions that we
23 did have the capability to electronically retrieve a
24 number of our records to ensure that we had our
25 current licensing basis captured. And what we're

1 seeing as a result of that, that electronic media has
2 helped to position us for the future here. It's a
3 resource that in particular our Engineering group uses
4 on a daily basis, but it also overrides our entire
5 organization. Key stakeholders have easy access to
6 that data and information, so as an organization it
7 has helped strengthen us. And, again, the license
8 renewal application process, I think, just gave us
9 more opportunities to enhance that database.
10 We're looking at continuing the positive
11 relationship we have with our community. Ginna has
12 positions itself over the years to be a key player in
13 the community, and we've gained a lot of respect from
14 that, and I think the license renewal process,
15 especially the environmental impact arena, we are
16 getting very positive accolades from the community.
17 And Constellation has that same type of value system
18 and approach, that they feel it very beneficial to be
19 a key player in a community. In fact, they are
20 meeting with our town officials as we speak just to
21 continue to foster that relationship that we have.
22 And as far as the plant uprate, I think we
23 spoke about that in some terms already. Obviously,
24 there is a value to the asset itself by going through
25 the power uprate, but it also allows us the ability to

1 continue to look at our licensing basis and the
2 ability of our equipment to operate, to maintain a
3 safe operation of the Plant. So there's a lot of
4 analysis that is ongoing to support that plant uprate
5 study, and the results of that, I think, will just
6 continue to increase the safety of our unit.
7 So those are the comments that I'd like to
8 make there, and the last bullet there, of course, with
9 the commitment transfer to Constellation it definitely
10 makes it easier to identify who the owner is and who
11 is responsible. And in this case here with
12 Constellation assuming all of that responsibility, we
13 have one person to go to, and it just makes it easier,
14 less complicated as far as identifying that issue.
15 So those are the points that I'd like to
16 make, and I appreciate the effort that's been put
17 forth. I call it a fast track of what we are able to
18 accomplish over this time frame, and it's not that we
19 overlooked anything. I think it was our ability to
20 work together to set targets and work to them that
21 we're able to sit here today and discuss what we are.
22 So thank you.
23 CHAIRMAN BONACA: I hear you're planning
24 to go to uprate the power of the Plant. So now your
25 temperature -- we asked you before about your

1 temperature, where will it go? Do you know already?
2 MR. WROBEL: About 603.
3 CHAIRMAN BONACA: Six-oh-three. So that
4 will go roughly where it was originally.
5 MR. WROBEL: Yes. Maybe a degree or two
6 higher. We've done the feasibility study. I can't
7 say to the tenth of a degree but that's pretty close.
8 CHAIRMAN BONACA: Yes.
9 MR. WROBEL: So we've had experience in
10 that. And, of course, having gotten rid of the Alloy
11 600 in the upper head, that at least puts us in a low
12 susceptibility category even if we hadn't -- I mean
13 irrespective of the temperature. And that's not
14 particularly high either.
15 CHAIRMAN BONACA: So then you have a
16 change that it's going to cascade, there are a number
17 of changes in process, barometers. Are you going to
18 have -- how do you assure that all the impact of these
19 changes is going to be reflected in your commitments
20 to license renewal? Do you have a process by which
21 you make a change and you go back to these programs?
22 MR. WROBEL: Actually, I'm transferring to
23 power uprate as soon as this is over.
24 CHAIRMAN BONACA: Yes.
25 MR. WROBEL: So at least that's a partial

1 answer. Yes, all the commitments -- when we do power
2 uprate all of the parameters within that are reviewed
3 against our commitment tracking system, and it's
4 basically the same engineers. Very few of them are
5 dependent on power level and fluence. The ones that
6 are are the TLAAs, and all the TLAAs will have to be
7 redone for the higher power level. We started doing
8 those already.
9 CHAIRMAN BONACA: Okay. All right. So
10 this completes your presentation?
11 MR. WROBEL: Yes. This completes our
12 presentation.
13 CHAIRMAN BONACA: All right. Any
14 questions from the members before we hear from the NRC
15 staff? If none, then --
16 MR. ARRIGHI: Russ Arrighi, Project
17 Manager. Good morning. My name is Russ Arrighi. I'm
18 the Lead Project Manager for the Ginna license renewal
19 application. Ginna is a two-loop pressurized water
20 reactor located in Waynes County, New York. It's one
21 of the plants that had went through the Systematic
22 Evaluation Program. The application was submitted to
23 the staff on July 30, 2002. On November 4, 2003, we
24 had the ACRS Subcommittee meeting, and then on March
25 4 of 2004, we issued the final safety evaluation

1 report.

2 Based on the staff's review of the license
3 renewal application, inspections performed by the
4 region and by the audits performed by the staff, the
5 staff concludes that the Applicant has met the
6 requirements of 10 CFR 54.29. Also, the requirements
7 of 10 CFR 51, the environmental protection
8 regulations, have been satisfied.

9 The NRC performed two audits and two
10 inspections at Ginna. The scoping and screening
11 methodology audit determined that the methodologies
12 satisfies the requirements of the rule. The staff
13 also performed an audit of the aging management
14 programs, and we determined that all the programs were
15 consistent with the GALL except for the Fire
16 Protection and Fire Water System Program. The
17 Applicant in the application stated they were
18 consistent with GALL. During out audit we determined
19 that there were some exceptions. We identified eight
20 total exceptions. The Applicant was aware of three of
21 those exceptions; however, due to an oversight or what
22 not they didn't inform the staff. We issued an REI
23 and the Applicant responded on the docket. We
24 reviewed those exceptions and we found those to be
25 acceptable.

1 MEMBER ROSEN: Would you characterize a
2 few of them for us so we know what was the nature of
3 these kinds of exceptions?
4 MR. ARRIGHI: Yes. For the Fire
5 Protection Program, there were three exceptions. The
6 one identified by the staff was the fire door
7 surveillance called out quarterly versus biweekly, as
8 indicated in the GALL. Two, that the Applicant had
9 identified -- had to do with the halon frequency
10 testing. They wanted to test the halon system every
11 two years versus every six months. And there was an
12 issue with the qualification of personnel performing
13 visual inspections.
14 In the Fire Water System Program, we
15 identified -- there were four total exceptions, and
16 the staff identified three of those. One had to do
17 with the sprinkler system not examined for
18 microbiological filing. The visual inspection of the
19 fire hydrants, the Applicant wanted to inspect those
20 at windows of opportunity versus every six months.
21 And another one had to do with the hydrant flow
22 testing on a periodic basis versus annually. And the
23 Applicant did submit those to the staff, and they were
24 reviewed and determined to be acceptable.
25 MEMBER ROSEN: Thank you.

1 MR. ARRIGHI: The region did two
2 inspections, the scoping and screening inspections,
3 and they determined that the Applicant was successful
4 in identifying those systems subject to -- that needed
5 aging management review. And the final inspection,
6 the Aging Management Program inspection, they
7 determined that the effects of aging would be
8 appropriately managed during the period of extended
9 operation.
10 This is similar to what the Applicant
11 pointed out. Again, there were 34 total aging
12 management programs. Thirty-one were consistent with
13 GALL or consistent with some exception or deviation.
14 There were three non-GALL programs. And as a result
15 of the staff's review, the Applicant did add two aging
16 management programs as a result of staff questioning.
17 One had to do with electrical cables not subject to EQ
18 used in INC circuits, and the other program was medium
19 voltage cables not subject to emergency -- to EQ, and
20 they added that. They pointed out earlier that the
21 off-site power cables that powered the safety bus for
22 service water once they brought those two cables in
23 scope they added a new aging management program, and
24 that program was consistent with GALL, and those were
25 reviewed by the staff.

1 Open and confirmatory items, our review
2 resulted in a total of eight open items and seven
3 confirmatory items. At the Subcommittee meeting, all
4 but four of those items had been resolved. We have
5 four listed here. The first one had to do with the
6 fire service water booster pump, called the jockey
7 pump. Initially, the Applicant did not have that in
8 scope of license renewal. The outcome of that was
9 that the Applicant did indeed include that in the
10 scope, so the staff was satisfied with that.
11 The second item had to do with the two
12 off-site power supply cables to the service water
13 train, for the service water pumps. Originally, those
14 cables were not in scope, and, again, the resolution
15 of that item was that the Applicant did add those two
16 cables in the scope of license renewal.
17 The third item had to do with -- there
18 were five of the ten attributes for the Thimble Tube
19 Inspection Program required clarification. They did
20 provide that clarification on the docket, and we found
21 that acceptable. Some of those items had to do with
22 the locations of the tubes to be inspected, the
23 frequency and the basis for testing. That wasn't
24 clear in the application, and, again, the Applicant
25 did provide that information to the staff, and we

1 found it to be acceptable.

2 And the last item was the Applicant

3 changed their methodology for determining the PTS

4 value from one that was based on the chemistry factor

5 to one that was based on surveillance data. The staff

6 had an open item that they wanted to review the

7 surveillance data and the calculations to ensure that

8 they met the credibility criteria of 10 CFR Part 61.

9 All those items have been satisfactorily resolved.

10 MEMBER FORD: I seem to remember on that

11 last item there's a question of the Applicant didn't

12 want to use one of the surveillance samples, is that

13 correct, and you were wanting to do so. How did that

14 resolve itself?

15 MR. ARRIGHI: I'm going to call on Barry

16 Elliot to describe that.

17 MR. ELLIOT: NO, no, no. They used all

18 the data for this Plant. The issue here was that 10

19 CFR 50.61 has certain criteria that should be

20 satisfied if you want to use the surveillance data,

21 and we just asked them to provide their -- to show us

22 that their surveillance data met all those attributes.

23 And they were able to convince us and show us that it

24 did, and then we were willing to accept the chemistry

25 factor and the radiation brittlement estimate. The

1 reason that they wanted to do this is because it
2 resulted in an advantage for them in that if you went
3 just according to the tables in the rule, they would
4 have a higher PTS value, and this lowered their PTS
5 value. And I assume it's because they know they're
6 going for power uprate, and this would probably be a
7 big factor for them for that. It really wasn't a
8 factor here for license renewal. They would have
9 passed anyway, but they did get an advantage doing
10 this, and we just wanted to make sure that they had
11 followed -- the program did what it was supposed to
12 do.
13 MEMBER FORD: So will this issue arise
14 again when they come for power uprate?
15 MR. ELLIOT: It will be to their advantage
16 in power uprate. As I said, I don't know how much
17 fluence increase there's going to be for the power
18 uprate, whether they would have passed using both
19 methodologies or not, I can't tell you that, but there
20 was an advantage they got here.
21 MR. WROBEL: Yes. We did do the
22 calculations for power uprate out to 60 years, and the
23 value was about 276.5, so we still have quite a bit of
24 margin even at that point. Now, that hasn't been
25 verified by Barry, but that's our own calculations.

1 MR. ELLIOT: Yes. One of the things I
2 just wanted to point out is this vessel has forgings
3 in it, so they only have circumferential welds in the
4 beltline. So that's why you see the tremendous
5 margins on equivalent margins analysis. They don't
6 have any axial welds that are -- and that's where our
7 problems are going to be in a nuclear pressure vessel.
8 It isn't going to be in the circumferential welds.
9 There's just not enough stress there to cause a
10 problem.
11 MEMBER SHACK: Okay. Now, do they have
12 enough capsules to get them out to --
13 MR. ELLIOT: Yes. Because they said they
14 have -- one they were going to take out in 2005, and
15 that was a big discussion. That was really a
16 discussion now that I remember, was when they were
17 going to take that capsule out. That's what the
18 discussion was. And then one standby, but when they
19 were going to take out that next capsule was a big
20 discussion. And we convinced them to keep it in a
21 little longer so they can get more fluence, and I'm
22 good to hear that they're going to keep it in to get
23 enough fluence to get power uprate too. And so we'll
24 be able to confirm the equivalent margin analysis and
25 we'll be able to confirm the PTS evaluation.

1 MEMBER SHACK: Thank you.

2 MR. ARRIGHI: The time limiting aging
3 analysis meet the requirements of 54.21. The staff
4 reviewed the equipment qualification TLAAs to verify
5 that the assumption of the methodologies were
6 adequate. Initially, I believe the staff reviewed
7 approximately 40 percent of the ones that had been
8 completed at the time of the license renewal
9 application. As George Wrobel pointed out earlier,
10 they have subsequently completed 100 percent of those
11 calculations. And based on the review, the staff
12 concluded that the effects of aging will be managed
13 during the period of extended operation.

14 Reactor vessel upper shelf energy, the
15 limiting weld is projected to be less than the 50 foot
16 pounds screening criteria. The staff did review the
17 Applicant's equivalent margins analysis calculations
18 and performed an independent analysis, and they
19 verified that the reactor vessel would have margins of
20 safety against fracture equivalent to those required
21 by Appendix G to Section 11 of the ASTME code.

22 CHAIRMAN BONACA: Okay.

23 MR. ARRIGHI: And for PTS, the projected
24 value is within the screening criteria.

25 CHAIRMAN BONACA: And all the other PLAs

1 have been completed, I understand, right?

2 MR. ARRIGHI: Yes. Our license conditions

3 for the Plant, the Applicant will include in the UFSAR

4 supplement -- will include the UFSAR supplement in the

5 next update as required by 10 CFR 50.71(e), and future

6 activities identified in the supplement will be

7 completed prior to the period of extended operation.

8 Again, the Applicant pointed out there are some

9 inspections that will be after the period of 2009.

10 Also, there's another --

11 MEMBER ROSEN: How does that square with

12 the idea that it will be completed before the period

13 of extended operation if you're not going to do the

14 inspections until you --

15 MR. ARRIGHI: Well, they're going to --

16 all the commitments -- the staff reviewed all the

17 license commitments, and, again, all commitments will

18 be completed as identified in Appendix A to the SER.

19 The staff did look at all those commitments and agreed

20 that those time periods specified were sufficient.

21 MEMBER ROSEN: But if you're not going to

22 do the inspections until you enter the period of

23 extended operation, then --

24 MR. ARRIGHI: There's only one or two

25 commitments. It's the --

1 MR. WROBEL: I can clarify that -- George
2 Wrobel. All of the commitments that will be done
3 after 2009 are part of programs. All of the programs
4 will be implemented prior to 2009. There will be some
5 minor specific activities that will be done after
6 that, but, for example, in our one-time inspections or
7 our periodic inspections, we'll be doing several of
8 them before 2009. We're going to continue those
9 through 2029, so all of these programs are living
10 programs anyway. The only ones that -- like, for
11 example, one of the commitments that we made for a
12 phased bus inspection will be done in 2012, but we did
13 one in 2002 already, so it's like a ten-year
14 periodicity between them. So the concept is all done
15 prior to 2009, but there's some specific activities
16 that are done after that, but they're really part of
17 a program that's already been implemented.
18 MEMBER ROSEN: Is this the first time
19 we've had this condition or is this typical of what
20 happens? It just seems different to me.
21 MR. ARRIGHI: Again, as George pointed
22 out, the only thing we called out why the commitments
23 looked different is because it's what is the frequency
24 of some of these inspections. Like George said, they
25 have done an inspection already. The staff just

1 wanted to ensure that they do continue those at a
2 certain periodicity. I haven't read the other
3 commitments from the other applications to see if it
4 called out to that specification.
5 MEMBER ROSEN: Sam or P.T., can you help
6 me with that?
7 DR. LEE: I believe this is a typical
8 commitment for all plants.
9 MEMBER ROSEN: Okay. So this isn't
10 different, you're saying.
11 DR. LEE: This is not different.
12 MR. KUO: I think this is no different.
13 Like George was saying, they happen to have done some
14 inspections in 2002, so the staff just wants some
15 more. Usually, people have not done any inspection,
16 so we make sure they at least do one before they enter
17 the extended period.
18 MEMBER ROSEN: Yes.
19 MR. KUO: So in this case, they've already
20 done one, but it's been a couple years back. We just
21 want them to do it again but not too close to the
22 first one they've already done.
23 DR. LEE: Just continuous. Basically, the
24 periodic inspection will continue later on.
25 MEMBER ROSEN: Okay. All right. Thank

1 you.

2 MR. ARRIGHI: The other license conditions

3 I show here, there's one that hasn't been displayed at

4 the full Committee meeting. This has to do with the

5 -- to ensure that the requirements of 10 CFR 50

6 Appendix H, the Reactor Vessel Surveillance Program

7 requirements, are extended beyond 40 years. And Ginna

8 does have a commitment to do that, but that is now a

9 license condition that we're imposing. It ensures

10 that all capsules in the vessel that are removed and

11 tested must meet the requirements of ASTME 185 to the

12 extent practical, and any changes to that withdrawal

13 schedule must be approved by the NRC.

14 In conclusion, again, based on the staff's

15 review, we conclude that the Applicant has met the

16 requirements for license renewal, and that concludes

17 the staff's presentation unless there are any

18 questions.

19 CHAIRMAN BONACA: Any questions from

20 members? I have a question for the Applicant here, if

21 I could. You do have, you said, a Level 3 PRA in the

22 Plant.

23 MR. WROBEL: That's correct. For sampling

24 we did that.

25 CHAIRMAN BONACA: Do you maintain it? Do

1 you keep it as a live PRA?

2 MR. WROBEL: Yes. We keep our PRA up to

3 date. We'll probably revise it on almost an annual

4 basis with the plant modifications and peer reviews

5 and comments and things like that. So we're --

6 MEMBER POWERS: Who leads your PRA? I

7 mean which individual is responsible for that?

8 MR. WROBEL: Well, we have a PRA group

9 within RG&E and we maintain it pretty much in-house,

10 and we'll probably get some help from Constellation in

11 a few months. But, yes, we do it in-house.

12 MEMBER ROSEN: You said you have Level 3.

13 MR. WROBEL: The Level 3 was -- yes, Level

14 3 was done by an outside contractor.

15 MEMBER ROSEN: All right. Now, that

16 includes population.

17 MR. WROBEL: That includes population.

18 MEMBER ROSEN: And you have to track

19 population shifts and that sort of thing when you do

20 your uprates, right?

21 MR. WROBEL: Right. It's consistent with

22 Chapter 2.2 in the FSAR, I think, that does population

23 distribution. So when we maintain it up to date we

24 could use that data for the 2003, although I think

25 when we did our Level 3 PRA I think we used population

1 estimates or projections out to -- I think we averaged
2 2009 to 2029. I think we might have used 2019. I
3 don't remember the exact number but projections out to
4 there. If you've ever been to Upstate New York, the
5 population does not change appreciably, except we lose
6 some people in the snow once in a while.
7 CHAIRMAN BONACA: Do you have a risk
8 monitor?
9 MR. WROBEL: Yes. We have an online EOOS
10 risk monitor, and we use that on a daily basis for all
11 plant evolutions.
12 CHAIRMAN BONACA: So you do have a PRA
13 person in the Plant or do you have them all in the --
14 MR. WROBEL: Yes. We have a PRA person in
15 the Plant. Now, the risk monitor is actually used by
16 Planning and Scheduling as well as Operations more
17 than the PRA people.
18 CHAIRMAN BONACA: Yes. Okay. Thank you.
19 Any other questions for Mr. Arrighi? Any questions
20 from the public? If none, thank you for the
21 presentation. It was informative.
22 we're well ahead of time and I think what
23 we're going to do, I'm going to give you an interim
24 report or our interim review of the license renewal
25 application for Dresden and Quad Cities. I don't

1 think we need the recorder for this, right? We're
2 going to be off the record until 10:15 when we go to
3 the next item on the agenda.
4 (Whereupon, the foregoing matter went off
5 the record at 9:30 a.m. and went back on
6 the record at 10:17 a.m.)
7 CHAIRMAN BONACA: Okay. We're back in
8 session and we're going to hear about a proposed
9 bulletin. Good morning.
10 MR. BATEMAN: Good morning. My name is
11 Bill Bateman. I'm Chief of the Materials and Chemical
12 Engineering Branch in the Division of Engineering at
13 NRR. With me this morning is Matthew Mitchell, a
14 senior staff member in my branch.
15 What we're here to discuss with you this
16 morning is a bulletin that is in the process of being
17 issued by the staff to all pressurized water reactor
18 licensees or the purpose of gathering information with
19 respect to the status of the similar metal welds on
20 and about the pressurizer. And with that, I'll turn
21 it over to Mr. Mitchell.
22 MR. MITCHELL: Okay. Thank you, Bill. It
23 is once again a pleasure to be back with you today.
24 We, of course, did a similar presentation about two
25 weeks ago for a couple of days here of subcommittees,

1 and I'd just like to note that the staff is very
2 appreciative of the comments that we received at the
3 subcommittee meeting, and what we took away as a
4 unanimous vote of support at that time for the actions
5 that the staff had planned with regard to this
6 proposed bulletin. So with that, I'd like to quickly
7 sort of give you an overview of what the main message
8 points are from this presentation; and that is, of
9 course, that the staff has developed a proposed
10 bulletin to address the inspection of Alloy 82/182/600
11 locations in the pressurizer boundary, which are
12 susceptible to primary water stress corrosion
13 cracking, and to clarify what that statement means.
14 We have notably excluded the potential
15 bimetallic weld between the surge line and the
16 pressurizer shell from the context of this bulletin.
17 The staff, as you will see in the text of the draft
18 proposed bulletin, the staff is having further
19 deliberation internally with regard to what to do
20 about large bore bimetallic piping wells. And that
21 particular location more readily fits within the scope
22 of any potential future actions the staff might wish
23 to take rather than the other types of penetrations
24 which are addressed in this proposed bulletin. So if
25 you will, one way of thinking about it is the

1 boundaries for this proposed bulletin start just above
2 that bimetallic weld location, and then anything above
3 that would be within the scope of what we're talking
4 about today.
5 The proposed bulletin is intended to
6 request information from the PWR licensees regarding
7 their past, present, and future inspection plans,
8 locations that are covered within the scope of the
9 bulletin, and their basis for concluding that the
10 inspection program that they are planning is adequate.
11 And it is adequate in terms of continuing to meet all
12 the appropriate regulatory and licensing criteria for
13 maintaining reactor coolant pressure boundary
14 integrity for their facility. And it is the staff's
15 position that the information we're requesting is
16 necessary for us to determine if additional regulatory
17 action beyond the bulletin is required to make sure
18 that that integrity is being maintained.
19 As I think the Committee is aware, we do
20 have extensive operating experience which has
21 demonstrated that these Inconel Alloy materials when
22 exposed to an environment like that found in the
23 pressurizer can lead to primary water stress cracking,
24 and this would include Alloy 600 heater sleeves at
25 combustion engineering design facilities, Alloy 600

1 diaphragm plates in the pressurizer heater bundle
2 design used at the Babcock and Wilcox design
3 facilities, as well as various instrument lines and
4 spray or safety and relief valve lines which are
5 common to many of the pressurizer designs. And for
6 reference, if you'll allow me to flip to the next page
7 very quickly, we've included sort of a typical drawing
8 of a combustion engineering or Westinghouse designed
9 facility's pressurizer, and you'll note although it's
10 not -- we don't have a legend on this particular
11 diagram that you have in front of you, some of the
12 locations which are numbered there would include like
13 at number 3, a spray line coming into the top of the
14 pressurizer, 4 and 5 would be general locations where
15 you might have safety and/or relief valve lines coming
16 off of the pressurizer steam space. Locations 5 and
17 7 would be instrument taps potentially, which may
18 include these materials. And then down at the bottom
19 you see heater sleeves coming into these particular
20 designs.
21 If you think about or wish to consider a
22 Babcock and Wilcox designed facility's pressurizer,
23 you would see instead of the heater sleeves or the
24 heater elements coming in from the bottom, you would
25 see a bundle coming in from the side. What has been -

1 although I've never actually looked at my hot water
2 heater at home, it's been given to me as the analogy
3 would be it looks something like what you would expect
4 to see in your home hot water heater with a grouping
5 coming in from the side.
6 MEMBER POWERS: Let me ask a question
7 undoubtedly with a great deal of ignorance on my part
8 in this particular field. We're always very careful
9 to say primary water stress corrosion cracking, and
10 I'm wondering what the significance of the primary
11 water is. Is it the temperature of that water or its
12 composition?
13 MR. MITCHELL: We use the term primary
14 water stress corrosion cracking more as a way of
15 differentiating the environment in which you are
16 seeing the cracking occur versus something like an
17 inner granular stress -- water stress corrosion
18 cracking is an example of, or very similar to inner
19 granular -- it's actually primarily in ferritic
20 cracking. But really, the term primary water just is
21 intended to transfer that -- we are talking about a
22 PWR environment in which you have a contained and
23 controlled chemistry that has very low amounts of
24 oxygen and other contaminants in it which you would
25 normally associate with stress corrosion cracking.

1 I'm not sure if I fully answered your
2 question, or if there's more that you'd like to have.
3 MEMBER FORD: I think the main thing is
4 that this -- it is related to the environment but not
5 so much to the cationic condition of it. It's a
6 fairly buffered solution. If you go beyond those,
7 like going to the acid side or alkaline side because
8 of the boric acid/lithium hydroxide balance, it will
9 change the cracking kinetics, but generally you fairly
10 proffered a known pH value. You don't have boiling,
11 you don't have crevice corrosion, heater interchange
12 or phase concentrations, so it is primarily
13 temperature driven. That's why their algorithm use
14 temperature as the main variable.
15 MEMBER KRESS: Primary temperature and
16 stress.
17 MEMBER POWERS: Well, those are some we
18 will discuss. Obviously, there's material stress and
19 environment parameter if temperature --
20 MEMBER SHACK: This was first observed by
21 Corio back in the 60s. It was called pure water,
22 because people always had the notion that stress
23 corrosion cracking required some sort of intrusion,
24 you know, chloride. It was always going to take some
25 -- well, the wonderful thing about Alloy 600 is it

1 will crack in completely pure water without any --

2 MEMBER ROSEN: It was designed to crack,

3 I think.

4 MEMBER SIEBER: No, but it was such a

5 surprise at the time that it was discovered, that they

6 called it pure water cracking to denote the lack of

7 ions.

8 VICE-CHAIRMAN WALLIS: Peter, you said

9 there's no boiling. Now this is a pressurizer.

10 MEMBER SIEBER: You don't need boiling.

11 MEMBER SHACK: But he's comparing with the

12 secondary side to concentrate --

13 VICE-CHAIRMAN WALLIS: How is vaporization

14 in the pressurizer during transients? And these

15 heaters are designed to heat the water, so there are

16 probably local areas where there is --

17 MEMBER SIEBER: There's boiling on the

18 heater tubes.

19 MEMBER ROSEN: We draw bubbles in the

20 pressurizer.

21 VICE-CHAIRMAN WALLIS: So why did you say

22 -- is the formation of bubbles important or not? You

23 said there's no boiling.

24 MEMBER FORD: I was trying to answer

25 Dana's question, and the reasons behind it. And yes,

1 you can have areas where you could have slight
2 pressurizer. Now would that give a problem? Maybe.
3 MEMBER KRESS: I don't think you boil on
4 the surfaces we're talking about.
5 MEMBER FORD: Yeah. I think boiling at
6 the actual --
7 VICE-CHAIRMAN WALLIS: We don't know,
8 because we don't quite know what the temperature
9 distribution is around these heater plugs.
10 MEMBER SHACK: It's not like the crevice
11 on the secondary side of a steam generator where you
12 get such concentrated boiling that you can get
13 concentration levels that are a million times the bulk
14 chemistry, and that's really what you're looking for
15 here is, you know, despite the fact that my feedwater
16 is extraordinarily pure, I can actually get a
17 concentrated environment in the steam generator
18 crevice because I have such enormous amounts of
19 boiling. Well, that just doesn't happen on the
20 primary side. I mean, you can get some boiling and
21 some kind of concentration level.
22 MEMBER SIEBER: In fact, you don't need
23 boiling in order to get the crack.
24 MEMBER FORD: Oh, no.
25 MEMBER POWERS: Let me ask you this

1 question as well, Peter. What is the significance of
2 radiolysis products in this cracking phenomenon?
3 MEMBER FORD: The main radiolysis product
4 you're talking about for this instance would be gamma
5 radiation, and that does not change the corrosion --
6 what you're really interested in is radiolysis
7 products is changing the species that are the thing.
8 For instance, the BWRs is primarily hydrogen oxide
9 radiolysis product. Oxygen, of course, is retained in
10 the BWR because of the partitioning of hydrogen and
11 oxygen to the steam fittings.
12 The other thing is changing the
13 constituents, hydrogen peroxide in PWR, and to also
14 change the corrosion potential. The current potential
15 as far as that is concerned might be changed by gamma.
16 In fact, it was not changed very much at all.
17 Cross neutrons could change the corrosion
18 potential. The ones I know of primarily as the
19 results of BWRs, and there are algorithms to relate
20 cross neutron flocks to corrosion potential, and
21 thereby accelerated cracking in the core.
22 I don't know of any similar studies that
23 have been in PWRs.
24 MEMBER KRESS: Is boric acid a player in
25 this?

1 MEMBER FORD: No. If you go -- have so
2 much boric acid you go outside the buffered range and
3 you start to go into the acid region.
4 MEMBER SHACK: But I mean there is great
5 difference between -- in a BWR without control of the
6 chemistry your potentials are hundreds of millivolts
7 higher than they are in a PWR where you do maintain
8 the hydrogen over-pressure.
9 MEMBER FORD: And that's why in the BWRs
10 you have such a strict, very, very strict control over
11 the impurity contents. And we were approaching purity
12 water in the --
13 MR. MITCHELL: And that control and
14 maintenance, are they very – what would assume to be
15 a less aggressive environment that goes back to the
16 bit about why we give it as being the primary water
17 stress corrosion factor and to differentiate it.
18 MEMBER FORD: That's why in general, we
19 understand the primary water side better than we do
20 the secondary side. The secondary side is a mess as
21 far as understanding.
22 MEMBER POWERS: That's because you don't
23 have good chemists working on that one.
24 MEMBER ROSEN: They handed us these
25 pictures or drawings. Are you going to go over that

1 a little bit?

2 MR. MITCHELL: I will use those to the

3 extent that you would like me to explain --

4 MEMBER ROSEN: Well, when you say

5 diaphragm plate in the pressurizer heater bundle, I

6 just go blank. In a B&W plant, the light --

7 MR. MITCHELL: Sure.

8 MEMBER ROSEN: And then I start maybe a

9 little bit to understand.

10 MR. MITCHELL: Then let me bring up this

11 particular background slide that I've got, which is

12 actually a slide we received from TMI in the context

13 discussions we had with them in the fall of 2003

14 regarding diaphragm plate cracking and leakage, that

15 they had occurred at that facility. And what this

16 shows is sort of a blow-up of a typical B&W design,

17 feeder bundle coming into the side of a pressurizer.

18 And I think I've got it oriented now, so you can

19 imagine it coming into the side of the pressurizer.

20 MEMBER ROSEN: You mean their heaters

21 actually go into the side of the pressurizer, not the

22 bottom?

23 MR. MITCHELL: That is correct.

24 MR. BATEMAN: They're on a separate plate.

25 They're in an assembly that's slid in and then bolted

1 on and sealed.

2 MEMBER ROSEN: See, I have no familiarity

3 with it so I don't --

4 MR. MITCHELL: The individual heater

5 elements come in through this, which is a strong

6 back, which provides the actual structural support for

7 the assembly. And it is bolted to the pressurizer.

8 MEMBER ROSEN: That's a pressurizer nozzle

9 on the right hand side.

10 MR. MITCHELL: Yes. This is the

11 pressurizer shell.

12 MEMBER ROSEN: Shell, not nozzle?

13 MR. MITCHELL: It's integral nozzle. It's

14 integrated into the shell.

15 MEMBER ROSEN: Okay. So it's -- and this

16 thing, you say, is not welded. This thing on the far

17 right is not welded to the shell of the --

18 MR. MITCHELL: It's seal welded, but it's

19 not structurally welded. This is the pressurizer

20 nozzle or shell. This is a diaphragm plate to which

21 the individual heaters are attached. It slides into

22 this opening essentially. It mates up at this

23 location. It's seal welded here around the

24 circumference of the diaphragm plate, but the

25 structural support is provided by this bolted strong

1 back which is bolted into the shell of the
2 pressurizer.
3 MEMBER ROSEN: So the way they assemble
4 this thing is they stick this diaphragm plate in first
5 and seal weld it. Right?
6 MR. BATEMAN: They bolt it up and then
7 they seal weld it.
8 MEMBER ROSEN: They bolt this whole
9 assembly up? How do they get the --
10 MEMBER POWERS: They weld it.
11 MEMBER ROSEN: They're welding in that
12 little gap?
13 MR. MITCHELL: I believe the details, I
14 think they may have to do the seal welding prior to
15 attaching the bolting on the strong back.
16 MEMBER ROSEN: I think so.
17 MR. MITCHELL: But how they exactly
18 support it in place --
19 MR. BATEMAN: Well, they got to hold it in
20 place in order to do the seal welding.
21 MEMBER ROSEN: Yeah, so how do they hold
22 it in place? Well, they could put a jig or something
23 --
24 MR. BATEMAN: They could put a jig or they
25 could bolt part of it, weld part of it. When they've

1 got the weld around the part that doesn't have the
2 bolts, they can move the nuts over to those. There's
3 various ways they could do it.
4 MEMBER FORD: Isn't the diaphragm --
5 there's two parts. There's a strong back and a
6 diaphragm. The diaphragm is welded in easily, and
7 then the strong back is bolted on.
8 MEMBER ROSEN: Yes. So I think the
9 sequence is they put the diaphragm in welded so they
10 have plenty of room around. They could get a good
11 seal.
12 MR. MITCHELL: Right. That would be
13 plausible.
14 MEMBER ROSEN: And they hold it in place
15 with some sort of jig or something. Maybe they just
16 press it in there or something.
17 VICE-CHAIRMAN WALLIS: Well, it's also
18 supporting the weight of those heater rods that are
19 sticking out.
20 MEMBER ROSEN: No, they're not in it.
21 VICE-CHAIRMAN WALLIS: They're not in it
22 yet.
23 MR. MITCHELL: Yes, they are.
24 MEMBER ROSEN: Oh, they are?
25 VICE-CHAIRMAN WALLIS: Yes, because

1 they're welded to the --

2 MEMBER ROSEN: They welding the seal with

3 the heaters installed already?

4 MR. MITCHELL: Yes. The heaters would

5 have been attached to the diaphragm plate at that

6 point.

7 VICE-CHAIRMAN WALLIS: To replace the

8 heaters do they have to cut a weld or something?

9 MEMBER ROSEN: Well, that just makes the

10 jig a little more complicated.

11 VICE-CHAIRMAN WALLIS: Everything is

12 welded up.

13 MEMBER ROSEN: I'm just trying to think

14 about what -- you know, how you get this thing put

15 together first before --

16 VICE-CHAIRMAN WALLIS: How do you fix

17 anything?

18 CHAIRMAN BONACA: Well, it's welded there.

19 MR. MITCHELL: For the purpose of this

20 discussion, I guess what we were trying to focus on is

21 the key point that this plate, at least at some

22 utilities, at some designs has been manufactured from

23 an Inconel 600 material.

24 MEMBER ROSEN: Which plate, the diaphragm

25 plate?

1 MR. MITCHELL: The diaphragm plate which
2 is shown in this cross-hatch region here.
3 MEMBER ROSEN: Okay.
4 MR. MITCHELL: And is, thus, potentially
5 susceptible to getting primary water stress corrosion
6 cracking.
7 MEMBER ROSEN: It's pretty thick though.
8 How thick is it?
9 MR. MITCHELL: Well, it's -- that
10 dimension I do not have off the top of my head, but at
11 the TMI -- for the TMI event what was actually
12 observed was that the cracking occurred up in the
13 region of where the seal weld is. It actually was --
14 MEMBER ROSEN: There's no water up there.
15 MR. MITCHELL: There is actually a contact
16 or a leak path where water can get up through --
17 MEMBER SIEBER: To the back of the seal
18 weld.
19 MR. MITCHELL: Yes.
20 MEMBER SHACK: There's only a seal weld at
21 the top. The rest of it --
22 CHAIRMAN BONACA: Right. The rest of it
23 is just contacted.
24 MR. MITCHELL: It's just a flush contact.
25 MEMBER SHACK: It's a crevice.

1 MEMBER ROSEN: Oh, yes. It's one of those
2 crevices.
3 MR. MITCHELL: And what they had observed
4 was actually cracking in the heat affected zone of the
5 seal weld, is where the cracking occurred and gave
6 them leakage during the TMI situation.
7 MEMBER ROSEN: Okay. Good.
8 MR. MITCHELL: Okay? It is a bit
9 complicated if you're not readily familiar with this
10 particular joint. It looks a whole lot --
11 MEMBER ROSEN: Well, I'm getting familiar.
12 You're helping me there, but I wasn't before.
13 MR. MITCHELL: If you'd like me to flip
14 over to the other design for just a moment, just if
15 you want to compare this to an individual penetration
16 that you're probably more used to seeing in the CE
17 design and Westinghouse design pressurizers. This
18 gives you a sense that a bottom-mounted heater sleeve
19 looks very much like a bottom-mounted instrumentation
20 nozzle off of a vessel, typical J-groove weld.
21 MEMBER ROSEN: And there's the same gap
22 there that provides a pathway to leak out if you crack
23 the J-groove weld.
24 MR. MITCHELL: That is correct, or if you
25 crack the tube around the J-groove weld. If you get

leakage there, it is a design gap of approximately 4 mils around where that heater sleeve slides into the pressurizer shell. But yes, it is not an interference gap.

MEMBER SIEBER: That gap is not ordinarily wetted.

MR. MITCHELL: Should not be wetted unless you actually have cracking and leakage.

MEMBER SIEBER: Yes, unless it leaks.

MR. MITCHELL: That's correct. And I should take this opportunity to note that at least as far as the Westinghouse design facilities go, as far as we are aware at this time, none of them have employed Alloy 600 heater sleeves. Their heater sleeves are uniformly stainless. It's the CE design facilities that chose to use Alloy 600 sleeves, so this particular aspect seems to be localized to the CE design.

MEMBER POWERS: And that's because of the Alloy 600, but because of its corrosion resistance?

MR. MITCHELL: They may have chosen it for a number of reasons, either thermal expansion issues or potentially if they recognized an advantage in terms of corrosion resistance.

MEMBER POWERS: Very strong.

1 MEMBER ROSEN: So what cracks in this
2 design is the J-groove weld again?
3 MR. MITCHELL: No. Actually, the cracking
4 that has been observed to-date in the CE design
5 facilities has been, as far as we're aware, isolated
6 to tube material itself. So you would get cracking in
7 this cross-hatched zone that I've colored in on this
8 particular picture in the area of the tube which sees
9 significant residual stresses from the J-groove weld,
10 but the cracking has been in the tube material.
11 MEMBER ROSEN: And then it leaks into the
12 gap.
13 MR. MITCHELL: Yes, it leaks around --
14 MEMBER ROSEN: Around the J-groove weld.
15 MR. MITCHELL: And then down.
16 MEMBER ROSEN: Which is just the opposite
17 of what South Texas saw on its bottom mounted, where
18 they saw the cracking in the J-groove weld.
19 MR. MITCHELL: No. Actually, the cracking
20 for South Texas, that was also present in the tube.
21 There was a flaw in the J-groove weld which
22 contributed to establishing an environment in the lack
23 of fusion zone between where the weld and the tube
24 mate up, but the actual primary water stress corrosion
25 cracking that was evident at South Texas was in the

1 tube material. It was also at --

2 MEMBER ROSEN: But in order to get --

3 MR. MITCHELL: Yes, there was a different

4 set of conditions. The fabrication related flaw in

5 the weld that we believe abetted that cracking in

6 South Texas, which we don't have evidence of in these

7 penetrations.

8 MR. BATEMAN: Something just to clarify

9 here. The industry -- the state of the industry at

10 this point is such that other than being able to do a

11 surface exam on one of these J-groove welds, they

12 cannot be examined volumetrically, so when we say

13 there's no flaw in the weld, that's because, in part,

14 we found a flaw in the base material, but that is the

15 housing. Now whether there's also a flaw that goes

16 all the way through in the weld or not, we don't know.

17 All we can tell -- there was surface exam, but there's

18 a crack in the surface. Whether it goes all the way

19 through or not, we don't know. Unless we did a

20 volumetric inspection of the tube, didn't find any

21 through-wall flaws there and we did have evidence of

22 leak, we could come to the conclusion that you had a

23 through-wall flaw in the weld, but we haven't seen

24 that yet.

25 MEMBER ROSEN: Or if you took it out like

1 they did at South Texas and sectioned the weld.

2 MR. BATEMAN: But they only took out a

3 portion of the weld. They didn't take out the whole

4 weld.

5 MEMBER ROSEN: They took out a section of

6 it and found it's been flawed.

7 MR. MITCHELL: That's correct. But I

8 think we also have a sense that because of the

9 difference in environmental conditions between the

10 pressurizer and the bottom head, where you're talking

11 about a range of 100 degrees Fahrenheit roughly, that

12 we wouldn't anticipate that you would need to have the

13 same set of pre-existing conditions to get these

14 penetrations to crack, as appear to be necessary to

15 get the bottom-mounted instrumentation nozzles at

16 South Texas to crack.

17 MEMBER ROSEN: It's much cooler at South

18 Texas than this --

19 MR. MITCHELL: Absolutely.

20 MEMBER SHACK: Just a question, Bill.

21 They actually did an enhanced VT-1 then to look at the

22 J-groove weld, and they can't see any surface cracks

23 in it?

24 MR. BATEMAN: In the pressurizer? No.

25 MR. MITCHELL: No.

1 MR. BATEMAN: We haven't done that kind of
2 -- the only thing we've done on the pressurizers is
3 basically volumetric inspection of the housing.
4 MEMBER SHACK: So you've only just come up
5 inside and looked around.
6 MR. BATEMAN: Right. That's it. Not a
7 whole lot of data from that method either up until
8 now.
9 MR. MITCHELL: But the only thing that you
10 can say is that when they have gone in and looked at
11 ones which had shown evidence of leakage, they had
12 found flaws in the tube material that would have
13 supported the leak path and what was getting deposited
14 to the outside.
15 MEMBER SHACK: So you don't need to have
16 a crack in the J-groove weld now.
17 MR. MITCHELL: Does not appear to be, yes.
18 We don't need to have that condition.
19 VICE-CHAIRMAN WALLIS: Can I ask about
20 thermal cycling when you have insurge from the surge
21 line against the bottom of the pressurizer. There is
22 some temperature change going on around this region.
23 MR. MITCHELL: There would be.
24 VICE-CHAIRMAN WALLIS: Is that a
25 significant effect as far as crack growth goes?

1 MR. BATEMAN: Well, Matt, I don't know
2 right off the top during steady state 100 percent
3 power operations how much surge flow we get. I would
4 suggest we're at steady state conditions and in the
5 normal 100 percent operation you wouldn't see much.
6 MEMBER SIEBER: The spray flow keeps the
7 surge line warm.
8 MEMBER ROSEN: You're going to send this
9 bulletin that you're proposing to all PWRs or just CE
10 and BNW?
11 MEMBER SIEBER: All of them because
12 Westinghouse has a lot of 82/182 --
13 MR. BATEMAN: This covers more than the
14 pressurizer heater sleeves. This bulletin covers all
15 the dissimilar metal welds on the pressurizer, which
16 would include instrument penetrations, the lines that
17 come off the top of the pressurizer, those types of
18 things. I mean, it could be confusing when you think
19 maybe Westinghouse doesn't use Alloy 600 J-groove
20 welds in their heater sleeves, but we're covering more
21 than heater sleeves in this bulletin.
22 MR. MITCHELL: When you consider the
23 instrument taps, when you consider in particular the
24 vent lines that come off the top, we have seen
25 evidence -- we've gotten responses from Westinghouse

1 design units that they did, in fact, use this material
2 in those locations.
3 MEMBER KRESS: What is the ultimate risk
4 of these cracks? Do they lead possibly to a small
5 break LOCA?
6 MR. MITCHELL: Well, you're kind of
7 jumping ahead to my punch line at the end which
8 reflects back on the question that Dr. Ford asked
9 during the subcommittee meeting. It's our best
10 understanding at this point in time that we can
11 anticipate evidence of leakage, and therefore, the use
12 of 100 percent bare metal visual inspections as an
13 appropriate management tool prior to putting
14 ourselves, or having the industry put themselves at an
15 unnecessary risk of having a small break LOCA.
16 MEMBER KRESS: But it is a small break
17 LOCA you're worried about.
18 MEMBER SHACK: It's 1.2 inches, yes.
19 MEMBER KRESS: Where does that size LOCA
20 fit on the risk curve for these plants? How much
21 contributing --
22 MEMBER POWERS: For a small break LOCA,
23 that is right in the regime for the plants that have
24 dominant small break LOCAs --
25 MEMBER SHACK: Which combustion plants

1 probably would be.

2 CHAIRMAN BONACA: Why don't we let him

3 finish his presentation --

4 MEMBER FORD: You can see that materials

5 is a very important subject. A very popular subject,

6 rather.

7 MEMBER POWERS: Yeah, but it never comes

8 to resolution. It takes forever. I mean, we've been

9 working on heavy section steel since the dawn of time.

10 MEMBER FORD: I think Tom's question while

11 we're on the subject was is there a CCDF, and I think

12 one was quoted.

13 MR. MITCHELL: Yes, one actually -- just

14 before I go to the next slide, just to try to close

15 the loop on that - what I understand the CCDF to be

16 for a small break LOCA at these facilities is

17 something on the range of 10 to the minus 4, 10 to the

18 minus 3 range for a small break LOCA. I'm not a risk

19 analyst, but those are the numbers I recollect.

20 MEMBER KRESS: Okay. That's significant.

21 MEMBER POWERS: That's get your attention,

22 doesn't it?

23 MEMBER KRESS: It's worth looking at.

24 MR. MITCHELL: Moving on to slide 5 then

25 --

1 MEMBER POWERS: Even though we have to put
2 with the --
3 MEMBER KRESS: Yeah, you're going to have
4 to put up the materials, blacksmith people.
5 MEMBER ROSEN: Well, if they didn't break
6 our vessels, the PRA guys wouldn't have to analyze it.
7 MEMBER KRESS: Put us out of business.
8 MR. MITCHELL: Thank you, Peter.
9 MEMBER FORD: That's quite all right,
10 Matt. I have to put up with this every day.
11 MR. MITCHELL: We do have also extensive
12 recent operational experience with this type of
13 cracking in the pressurizer environment. And this
14 includes from the fall of last year, leakage which was
15 observed at Millstone, you had two, in Waterford you
16 had three. In those instances, the cracking was
17 confirmed to be axially oriented PWSCC in the pressure
18 boundary portion of the heater sleeves, again with the
19 caveat regarding the limitations about actually
20 inspecting the welds. There was evidence of this type
21 of cracking leading to the leakage.
22 The most significant event was in October
23 of 2003 when Unit 2 at Palo Verde discovered
24 circumferentially oriented PWSCC actually in the non-
25 pressure boundary portion of five of their pressurizer

1 heater sleeves when they were in the process of doing
2 a proactive replacement of these penetrations with
3 Alloy 690 half nozzles. So once again briefly jumping
4 back to this diagram since they are a CE facility,
5 you'd be talking about circumferentially oriented
6 cracking just above the area of the J-groove weld. So
7 in the non-pressure boundary portion yet, in a portion
8 of the sleeve which is subjected to substantial
9 residual stress --
10 MEMBER ROSEN: I'm beginning to believe
11 that when somebody tells me that there's axial
12 cracking, that all they know is that there's axial
13 cracking now that hasn't yet become circumferential.
14 And every time we hear about axial, pretty soon
15 somebody says and then we found the circumferential
16 crack.
17 MR. MITCHELL: And in some way -- and that
18 is essentially a very -- that's an accurate
19 characterization of how we have seen cracking of this
20 nature develop if you look across a meaningful length
21 of time. Axial cracking, then circ cracking. And
22 there is a big reason for that, if you consider the
23 differences in the stresses that would lead to axially
24 oriented cracking versus circumferential --
25 MEMBER ROSEN: It may initiate axially,

1 and then begin to swing -- is it the same crack or is
2 it a different crack? When you get a circumferential
3 crack, if you could trace it back in time with time
4 lapse photography, you would have originally seen an
5 axial crack.
6 MR. MITCHELL: In the case of what was
7 seen at Palo Verde Unit 2, no. Those were independent
8 circumferential cracks. My recollection of the
9 information we got from Palo Verde Unit 2 was there
10 was no axial component associated with that crack. It
11 was a circ crack.
12 VICE-CHAIRMAN WALLIS: All these four
13 events in 2003, were these the first events? The
14 first discoveries were in 2003?
15 MR. MITCHELL: Oh, absolutely not. Our
16 history --
17 VICE-CHAIRMAN WALLIS: There's a long
18 history before that.
19 MR. MITCHELL: Back into -- actually, even
20 into the 80s there was evidence of cracking here.
21 VICE-CHAIRMAN WALLIS: But axial cracking.
22 MR. MITCHELL: That cracking we believed
23 to have been or confirmed to have been axial.
24 Circumferential flaws at Palo Verde Unit 2 were our
25 first evidence of a circumferential mode of this

1 cracking in these locations.

2 MEMBER ROSEN: I'm sorry I have to

3 interrupt again, but I really need the information.

4 Millstone 2 and Waterford 3 are CE plants both, right?

5 MR. MITCHELL: That is correct.

6 MEMBER ROSEN: And so is Palo Verde.

7 Okay.

8 MR. MITCHELL: That is correct.

9 MEMBER ROSEN: And Tsuruga is

10 Westinghouse. Right?

11 MR. MITCHELL: I believe that's correct.

12 MEMBER ROSEN: All right.

13 MEMBER POWERS: I noticed on item 2

14 they're replacing with Inconel 690, and 690 is chosen

15 because it's immune to all this?

16 MR. MITCHELL: I would not use the word

17 "immune". I would use that it is believed to be more

18 resistant to this type of degradation. I don't know

19 of anyone who would make a claim that it is de facto

20 immune to PWSCC at some point in the future.

21 MEMBER POWERS: And the belief in this

22 immunity comes from religious fervor or --

23 MR. MITCHELL: We've had, of course,

24 extensive operating experience with people, for

25 example, replacing steam generator tubes and going

1 from Alloy 600 to 690 steam generator tubes. And the
2 track record of those has been rather exemplary in the
3 length of time they have been used, so we have reason
4 to believe that this material should be, and in fact
5 is performing in a way which demonstrates that it is
6 more resistant to this crack.
7 MEMBER ROSEN: Now if you took the early
8 experience with 690, it shows nothing, and pushed it
9 back in time and overlaid it over the early experience
10 of 600, would you see that it looks just the same as
11 600 did in the early years?
12 MR. MITCHELL: I don't believe you would
13 be able to make that kind of a claim. I think, in
14 fact, at accelerated forces testing of 690 would also
15 support the fact that even if it had reached the same
16 condition as 600 has reached since being in a plant
17 from day one of operation, would not expect to have
18 seen the same -- certainly not the same magnitude of
19 degradation.
20 MEMBER ROSEN: We're not fooling
21 ourselves, you're saying.
22 MR. MITCHELL: I do not believe we are.
23 I believe we have good solid reason to believe that
24 690 is a much better material, but not immune.
25 MR. BATEMAN: Just as a point of interest,

1 one of the things we put on the industry's plate is --
2 it relates to the upper vessel head. We have an order
3 out there that dictates the inspection frequency,
4 depending on what susceptibility category you're in.
5 Plants that have replaced their heads and used Alloy
6 690 material we've said to industry you're going to
7 stay in the same inspection regime until you can show
8 us, provide data to us that 690 is as good as you say
9 it is.
10 We had a meeting with industry earlier
11 this week, wherein they presented some technical data
12 on the performance of 690, and they've been unable to
13 get it to crack, so that's pretty good stuff. I mean,
14 the data, we're in the process of getting it up on our
15 website. It'll take a while because I think we've got
16 like 1,200 pages at that meeting. But there's data
17 out there, and this stuff is very well resistant, this
18 type of cracking at this point. And I think like Matt
19 referred to the steam generator tubes, and there were
20 some other data that wasn't specifically related to
21 tubes, but other Alloy 690 material that hasn't
22 cracked either. Peter, you may know more about this,
23 as well.
24 MEMBER FORD: Yes, I just wanted to --
25 your question, are we fooling ourselves in taking

1 analogy to 600. There are no materials which are
2 immune in a thermal dynamic sense to cracking. What
3 most people have done in the -- reactor builders, they
4 cite a factor of improvement. They say the factor of
5 improvement is such and such, factor of 10, factor of
6 2, whatever it might be to mitigation action. That
7 means, therefore, that if you wait enough time, you
8 will see cracking in this improved material. And
9 we've seen it time and time again.
10 The question is how long will it be before
11 you will start to see the cracking, not see the
12 practical operating condition. It could be beyond 80
13 years, and forget about it. Matt is absolutely
14 correct, Alloy 690, the leader of the fleet experience
15 in the steam generator. That has been very good, and
16 there's a lot of steam generators, especially in
17 France, operating for many years. And okay, it's not
18 the same stresses, it's not necessarily the same
19 temperatures.
20 MEMBER POWERS: Yeah, they drink lots of
21 red wine, and --
22 MEMBER FORD: I have tonic -- but whenever
23 people say immune, you take it with a big pinch of
24 salt, no numbers on it.
25 MEMBER ROSEN: So what is the factor of

1 improvement do you think?

2 MR. BATEMAN: Well, they did present some

3 data on factors of improvement, and range from 13 to

4 26.

5 MEMBER SHACK: But those factors are

6 almost calculated how long you're willing to wait in

7 the test. You know, if you stop the test you can only

8 say it's at least this much. You can't get it to

9 crack.

10 MEMBER ROSEN: So you're saying it's at

11 least 13, in the range of at least 13 to 26.

12 MR. BATEMAN: At least 13.

13 MEMBER POWERS: How does this compare to

14 Alloy 800?

15 MR. BATEMAN: Alloy 800 is not as good in

16 laboratory testing. It is also considerably more

17 resistant than Alloy 600, but I don't think it's as

18 good as Alloy 690.

19 MEMBER FORD: An analogy, the Germans keep

20 saying that they have any problems. You could

21 reasonably say that if you take the experience of, for

22 instance, the use of 316 BWRs, you can crack 316 and

23 you will start to see it. The Japanese didn't see

24 cracking of their 304 for a decade after we did,

25 because they operate different water conditions. So

1 you've got to take all these things into account.
2 800, I'm convinced, is certainly not immune. That's
3 for sure. Is it better than 690? I don't think so,
4 so you might well say, you're going to see cracking in
5 the German steam generators before we start seeing
6 cracking in 690 steam generators.
7 VICE-CHAIRMAN WALLIS: Are these magic
8 numbers just brand names, like Boeing 747s, or do they
9 indicate the proportion of something in this material?
10 MEMBER SHACK: These are generic.
11 Ancillary 800 is the proprietary brand, Alloy is
12 generic.
13 VICE-CHAIRMAN WALLIS: 800 has nothing to
14 do with --
15 MEMBER FORD: We just associate it with
16 ASME.
17 VICE-CHAIRMAN WALLIS: So we don't know
18 what's going on when you change these numbers.
19 MEMBER SHACK: Oh, no. It's Chromium
20 content. Alloy 800 is a high class stainless steel,
21 690 is --
22 CHAIRMAN BONACA: Let's move on with the
23 presentation.
24 VICE-CHAIRMAN WALLIS: So there is some --
25 MEMBER SHACK: Oh, yes. There's a very

1 definite composition.

2 MEMBER FORD: Okay, guys. We're jumping

3 in on your, Matt.

4 MEMBER SIEBER: Yes, why don't we talk

5 about the bulletin?

6 MEMBER POWERS: Why? We could read the

7 bulletin.

8 MR. MITCHELL: And I'll try to expedite

9 the rest of this presentation to get you back on

10 schedule as best I can. Just note on the third bullet

11 down, also of interest was the Tsuruga Unit 2

12 experiments in Japan, which showed evidence of

13 cracking of this same type, axially oriented PWSCC in

14 the nozzle-to-safe end butt welds in lines in the

15 unit's steam space. So now we're talking at the top

16 of the pressurizer.

17 MEMBER SHACK: But then this looks like a

18 V.C. Summer weld, so it's an axial weld crack?

19 MR. MITCHELL: Yes, that would be correct.

20 MEMBER SIEBER: This would be like spray

21 line.

22 MR. MITCHELL: Spray line.

23 MEMBER SIEBER: Safety valve line.

24 MR. MITCHELL: Relief valves, yes. But

25 again, what caught the staff's attention most

1 forthrightly was the circumferential cracking evidence
2 at Palo Verde Unit 2, based upon which the staff
3 engaged the Westinghouse Owner's Group who now has
4 ownership of the CE design facilities, as well, and
5 asked them to provide an operability assessment to
6 justify continued operation over the near term for
7 those in light of that new cracking experience, as
8 well as a long-term inspection program for addressing
9 what inspections would need to be done to ensure that
10 integrity is being maintained at these locations.
11 And I'll note on slide 7 that, in fact,
12 the operability assessment was submitted in December
13 of 2003. The staff is still in the process of
14 reviewing that particular assessment. We did issue a
15 request for additional information to the Owner's
16 Group, I believe it was back in January when that went
17 out, and we're still waiting for a response to clarify
18 some of the details regarding their analysis and their
19 assessment.
20 MEMBER ROSEN: How long is your patience
21 on this going to extend? I mean, it's now what, four
22 months?
23 MR. MITCHELL: Probably more like two to
24 three months.
25 MEMBER ROSEN: Since the discovery of the

1 cracking. Now you've issued RAIs and are waiting for
2 responses. You seem to be laid back on this subject.
3 MR. MITCHELL: I think that the fact that
4 we are issuing or we are in the process of just
5 debating a proposed bulletin is the first step in
6 noting that we are -- our patience is running thin
7 regarding getting some actual physical action taken to
8 put inspections in place which should address this.
9 The JCO or the operability assessment is,
10 if you will, an engineering paper exercise to give you
11 a warm feeling regarding the current condition of
12 these penetrations.
13 I think based upon our observations on
14 what we did receive even in December, we feel that
15 there is a good reason to believe that obviously these
16 plants remain safe to operate, and we have reasonable
17 expectation that we will see leakage before any type
18 of wholesale failure would be expected. So I guess
19 what I should convey to the Committee is, we are
20 asking about details of the analysis; however, the
21 bottom line of the analysis provided by CE Owner's
22 Group, that the continued operation is justified at
23 this time is not in question.
24 MEMBER ROSEN: But you've got two windows
25 when inspections are typically done, the fall and the

1 spring.

2 MR. MITCHELL: Yes.

3 MEMBER ROSEN: We've missed the spring
4 window, basically, with regulatory action, so are you
5 going to make the fall window?

6 MR. MITCHELL: Certainly the intent of the
7 plan that the staff has internally is to get th
8 bulletin, if and when it is issued, out in such a time
9 frame that we can get information back from the
10 licensees prior to the fall outages. So we are
11 looking at a time step such that we have a chance to
12 look and evaluate that information before the fall
13 outages start. So yes, we are trying --

14 MEMBER ROSEN: So you'll get information
15 back before the fall outages, but then you'd have to
16 get an order out, or some sort of requirement to do
17 the inspections if you believe they're required, or to
18 do something. All you're doing is collecting
19 information. You are not requiring any additional
20 inspection.

21 MR. BATEMAN: It's an information request.
22 And then parallel with this, I think we were having a
23 little discussion before the meeting got started on an
24 April 2nd memo that was issued by the MRP, requesting
25 that licensees inspect all dissimilar metal welds in

1 the reactor coolant system, which would include those
2 on the pressurizer, some time during the next two
3 outages. So we'll probably get some additional data
4 this spring outage season just from that request
5 alone.
6 MR. MITCHELL: Let me also say that
7 although we haven't taken formal regulatory action
8 with respect, obviously, to the spring outages, we
9 have been having phone calls, teleconferences with
10 each licensee who is entering a spring outage to get
11 an idea of how they would respond in terms of what
12 inspections they will be doing this spring on these
13 same penetrations. And uniformly, the responses I've
14 been getting from them is that they are doing 100
15 percent bare metal visual exams. We have been, at
16 least, getting that amount of information from the
17 spring outage facilities.
18 MEMBER POWERS: Would you explain to me a
19 little more about this bare metal visual? When I look
20 at metals that Dr. Shack cracks in his laboratory, he
21 has to show me the crack because I can never find it.
22 Are you looking for cracks, or are you looking for
23 leakage?
24 MR. MITCHELL: You're looking for
25 deposits.

1 MEMBER POWERS: Deposits.

2 MR. MITCHELL: You're looking for the

3 Boron deposits.

4 MEMBER POWERS: And why is that

5 satisfactory? Because, I mean, obviously the leak is

6 through the wall at this point. Don't you want to

7 catch it before it gets that far?

8 MR. MITCHELL: Again, because it --

9 ideally, yes. Yes, one would like to find cracks

10 before they would penetrate the reactor coolant

11 pressure barrier. We have had, however, good

12 experience now since the late 80s with licensees being

13 able to locate these cracks, repair the damage, fix

14 the penetration that shows evidence of leakage before

15 we have any other consequential effects, like Boric

16 Acid corrosion at the pressurizer shell, et cetera.

17 MEMBER SHACK: With one significant

18 exception.

19 MR. MITCHELL: Well, yes, I was not --

20 didn't want to include that particular part in the

21 discussion.

22 MEMBER SIEBER: Well, tell us about it.

23 MEMBER POWERS: Well, it seems to me that

24 that's true if everything you saw was axial in nature.

25 MR. MITCHELL: Yes.

1 MEMBER POWERS: But now you've seen these
2 circumferential --
3 MR. MITCHELL: Well, we have seen
4 circumferential cracks, but the evidence at Palo Verde
5 is that has been in non-pressure boundary portion, so
6 that would not - did not lead to any type of leakage.
7 That was entirely internal to the pressure boundary.
8 MEMBER POWERS: So that was all driven
9 just by residual stress?
10 MR. MITCHELL: Correct.
11 MEMBER FORD: Matt, maybe it would be an
12 idea if you put up the diagram, because this topic
13 came up for a lot of discussion, Dana, the adequacy of
14 bare metal visual. Maybe you could point out where
15 the --
16 MEMBER ROSEN: Where the non-pressure
17 boundary, what do you mean?
18 MR. MITCHELL: Well, going back to this
19 diagram, if you see the dashed line that I've
20 superimposed upon this diagram, anything above that
21 dashed line would be non-pressure boundary. So
22 essentially, it's the extension of the heater sleeve
23 up inside the pressurizer. Going down from that
24 dashed line, if you have cracks in that region, you
25 would consider those to be pressure boundary flaws,

1 because those would eventually breach the pressure
2 boundary and lead to leakage.
3 And the experience that we've had to date
4 regarding cracks in the pressure boundary has been
5 when people have done inspections, that those have
6 been axially oriented. And that is, in part - that
7 experience is what leads us to believe that we can
8 continue to accept as a first inspection the use of
9 bare metal visual exams looking for evidence of
10 leakage.
11 MEMBER POWERS: I mean, you confused me a
12 little bit. You see circumferential cracks and you
13 said oh, my God, I've got to get a bulletin out. Now
14 you tell me well yeah, but they didn't really count.
15 MR. MITCHELL: Well, going back to Dr.
16 Rosen's observation that we have seen a consistent
17 development trend in cracking of this nature, from
18 axially oriented in an earlier time period, to
19 circumferentially oriented. We are trying to get
20 ahead of the game, believing that at some point we may
21 face circumferentially oriented cracking within the
22 pressure boundary, which is why a part of the
23 bulletin, a significant part of the proposed bulletin
24 is we want licensees to acknowledge a need to go in
25 and characterize any penetration in which they see

1 evidence of leakage. We want to be able to find the
2 first onset of circumferential cracking in the
3 pressure boundary when it leads to evidence of leakage
4 as soon as possible.
5 MEMBER POWERS: Okay. So there is some
6 theorem of metallurgy that we get circumferential
7 cracking only after we have seen Boric Acid on the
8 outside.
9 MR. MITCHELL: No. But we have -- the
10 analyses to-date has suggested that as far as
11 circumferential cracking would go, if you postulated
12 circumferential cracking to occur in the pressure
13 boundary portion of, in particular, these heater
14 sleeves.
15 MR. BATEMAN: And we've never seen this.
16 MR. MITCHELL: Which we have never seen,
17 you would expect it to drive itself through a wall,
18 and show evidence of leakage prior to, in any way,
19 approaching a size such that it could lead to
20 wholesale gross rupture of the --
21 MEMBER ROSEN: When you show evidence of
22 leakage, if you're leaking water, primary water, but
23 what about in the steam space? What if you crack in
24 the steam space? Do you get enough Boric Acid in the
25 steam?

1 MR. MITCHELL: Actually, the cracks at
2 Tsuruga were initially identified, the Japanese plant
3 which had cracking of the steam space vent line, were
4 originally identified due to the fact that they
5 identified deposits in those locations. So with that
6 experience, I would think --
7 MEMBER ROSEN: So that what they call it,
8 sometimes a decontamination factor or separation
9 factor during the boiling is not large enough to make
10 leakage that occurs through a steam space crack to
11 result in just water that doesn't -- leaves enough of
12 a deposit anyway, is what you're saying, at least from
13 the Tsuruga experience.
14 MR. MITCHELL: That would be my
15 understanding. Yes.
16 MEMBER ROSEN: I'd like to understand the
17 chemistry. I mean, is there someone who knows the
18 chemistry well enough who can talk about separation of
19 Boric Acid between liquid and steam?
20 MEMBER POWERS: I believe on a time scale
21 of every four years this question comes up.
22 MEMBER ROSEN: Oh, does it.
23 MEMBER KRESS: If the boiling takes place
24 at high pressure, you will leave a good fraction of
25 the Boric Acid with the liquid, and the steam won't

1 carry much out. If it takes place at low pressure,
2 just stops and occurs, you carry a lot of it out, and
3 you can with the steam. So you can take that to see
4 what you can do with it.
5 MEMBER ROSEN: So what is the boiling
6 occurring here, at high pressure or low pressure?
7 VICE-CHAIRMAN WALLIS: High pressure.
8 MEMBER ROSEN: High pressure.
9 MEMBER KRESS: It has to do with the
10 solubility and the partitioning between the gas phase
11 and the liquid phase, as well as the ability of the
12 steam to carry that stuff out as it's partitioned. A
13 lot of it is governed by the fact that you're not
14 carrying much steam volume out at high pressure.
15 MEMBER ROSEN: I think what Dr. Kress has
16 said is that you're not going to see much. I mean,
17 most of it because it's boiling at high pressure here
18 in the pressurizer, most of it --
19 MEMBER KRESS: It leaves it behind in the
20 water.
21 MEMBER ROSEN: It leaves it behind in the
22 water, so it may have been fortuitous that you saw it
23 in Tsuruga, or there was a lot of leakage before you
24 got -- you're not going to get it early is what this
25 says.

1 MEMBER SIEBER: The steam in the
2 pressurizer does have a quality factor. I mean, it's
3 not dry.
4 MEMBER KRESS: Well, that's another
5 content. Yes, now my analysis did not include that.
6 And if you get any liquid carried out with it, it's
7 going to carry it content of Boric Acid.
8 MEMBER ROSEN: See, all of these are very
9 erudite people around me, leave me with a question as
10 to whether how good a tell-tale steam space leakage is
11 for Boric Acid. I'm not --
12 MEMBER SIEBER: It takes more leakage.
13 MEMBER ROSEN: Anyway --
14 MEMBER SIEBER: For a given size of the
15 deposit.
16 MR. MITCHELL: We will carry that back as
17 a comment.
18 MEMBER ROSEN: Something to think about.
19 MEMBER POWERS: Let me go back one step.
20 It's repetitious, I know, but I'm slow. You showed on
21 a previous slide a number of instances of
22 circumferential cracking that was not in the pressure
23 boundary. Did you also find in those same locations
24 lots of axial cracking?
25 MR. MITCHELL: In those particular things

1 at Palo Verde, the ones that showed evidence of
2 circumferential cracking, my recollection is that
3 there was not axial cracking in the same penetration.
4 MEMBER POWERS: So the Rosen evolution
5 seems not to be true.
6 MEMBER KRESS: Under some conditions.
7 MR. MITCHELL: I don't -- and when I was
8 --
9 MEMBER POWERS: I have learned that that's
10 the case here.
11 MEMBER ROSEN: Oh, it's only a matter of
12 time until I'm proved correct.
13 MR. MITCHELL: If you're talking about a
14 physical connection between axial cracking in a
15 particular tube, heater sleeve, then turning
16 circumferential - yes, that is not substantiated.
17 What I was trying -- the evolution point that I was
18 trying to make was that if you look at the cross
19 experience of the fleet, you see axial cracking
20 showing up throughout the fleet first before you begin
21 to get evidence of circumferential cracking.
22 MEMBER POWERS: But the question is, is it
23 a case that in a given plant, in given circumstances,
24 in a given location that you will see axial cracking
25 first, and then circumferential cracking, or do the

1 two seem to be disjoined distributions?

2 MR. MITCHELL: I can't point to concrete

3 evidence which would support saying that you would

4 always get axial cracking in a given plant, at a given

5 location prior to getting circumferential cracking.

6 I can only speak to it in terms of the general

7 evolutionary trend across the fleet.

8 MEMBER POWERS: So you're looking at an

9 ensemble average instead of a time average. I

10 understand what you're doing. I don't know whether to

11 be more concerned or less concerned.

12 MEMBER KRESS: I draw some comfort from

13 his comment that they've made analysis that show if

14 you do have a circumferential crack that it in itself

15 will leak before it reaches a stage where it goes to

16 a small break LOCA. I find some comfort in that. I'd

17 like to see that analysis, but --

18 MEMBER SHACK: If you look at what's

19 happening here, I mean the reason you're getting

20 residual stresses is you're heating this stuff up.

21 It's expanding, plastically deforming and then cooling

22 down. And you're in a constrained situation where

23 you're expanding about as much this way as you are

24 this way, and you're about as constrained in one

25 direction or another, so what you typically find here

1 is that the difference in residual stresses isn't all
2 that dramatic. You've got high stresses axially and
3 high stresses circumferentially --
4 MEMBER KRESS: So it doesn't carry a
5 circumferential reaction.
6 MEMBER SHACK: Well, you get either one.
7 Now it may be they're a little higher axially, so
8 you'll get a predominance of axial cracks. But in the
9 statistical sort of thing here, you've got a high
10 stress in both directions, and it's very unlikely that
11 you're immune to circumferential cracking. You just
12 may have a slight -- you may have a propensity to go
13 axial, but depending on what the welder did and just
14 how everything worked out --
15 MEMBER ROSEN: Is this a bipolar
16 situation, Bill? Either you go axially or
17 circumferentially? Can you go 45?
18 MEMBER SHACK: No, you can go 45.
19 MEMBER ROSEN: Okay. Now see.
20 MEMBER KRESS: But how do you feel about
21 the concept of an axial crack, I mean a
22 circumferential crack will leak before it's near
23 breaking? That's a pretty solid --
24 MEMBER SHACK: These are -- Matt also
25 showed that these are wonderfully unaxi symmetric

1 situations again. The nozzle you probably worry about
2 most is th one right down at the bottom, but this
3 guy's got this -- and if you look at this, you'll find
4 out there's a significant azimuthal variation of
5 stresses around there, so you're going to grow through
6 somewhere, get some growth.
7 But the other point I would make is that
8 without doing a detailed stress analysis, I would
9 suspect I have high stresses above that weld, and high
10 stresses below that weld. Whether one is slightly
11 higher than the other, without an abacus analysis I'm
12 not going to venture to say. But they're all going to
13 be high, so the fact that it cracked above the weld
14 doesn't give you a great deal of comfort.
15 MR. MITCHELL: It would be fair to say,
16 and just reflecting again on the analysis that has
17 been provided by the industry, although again, we do
18 have questions on the docket regarding their analysis
19 - their results were indicating that the stresses
20 above the weld were slightly higher than perhaps 25
21 percent or so, than the stresses below the weld.
22 MEMBER FORD: So in terms of just looking
23 at the risk associated with this idea that we're going
24 to use the appearance of Boric Acid at the bottom of
25 that annulus, has been the telltale, before you start

1 to go into a detailed volumetric analysis. It depends
2 on a crack initiating on the inside of the tube situs
3 to the J-weld. That's correct? I'm propagating
4 circumferentially but not uniformly around the
5 circumference. It will go through at one point
6 because of the azimuthal variation in residual stress.
7 Is that right?
8 MR. MITCHELL: I believe that
9 characterization is correct, yes.
10 MEMBER FORD: And so to back up that,
11 you're relying almost entirely on Bill's observations,
12 which are correct, that the azimuthal and asymmetric
13 weld, the azimuthal variation of residual stress would
14 be up and down.
15 MR. MITCHELL: Yes.
16 MEMBER FORD: Okay.
17 MEMBER KRESS: Now if you get a
18 circumferential crack that starts to leak but it's
19 early in the time between refueling outages, you
20 didn't see it before, I mean during the refueling
21 outages, but it happened a short time thereafter,
22 you've got two years of leaking without knowing about
23 it, because you don't go visually inspect it until the
24 next refueling outage. Is that enough time for this
25 circumferential crack to grow and become near the

1 point of creating a small break LOCA, or not?

2 MR. MITCHELL: Based again upon the

3 analysis that the licensees provided, the Westinghouse

4 Owner's Group provided in their operability

5 assessment, the answer to that would be no. They

6 showed significantly more time would be required,

7 particularly given the fact that you would eventually

8 have to grow the crack into a much less tensile stress

9 field. And, in fact, you may expect to get

10 compressive stress fields at some point around the

11 circumference, would inhibit the ability of that crack

12 to grow and be very large in the circumferential

13 direction within a two-year time span.

14 MEMBER ROSEN: I know our Chairman wants

15 to move ahead, but tell me what would happen if it did

16 go circumferentially? Would that sleeve eject?

17 MR. MITCHELL: If you got a large enough

18 circumferential flaw --

19 MEMBER ROSEN: Completely severed, what

20 happens?

21 MR. MITCHELL: It would eject.

22 MEMBER ROSEN: Why?

23 MR. MITCHELL: If it were below the weld?

24 MEMBER ROSEN: Yes. Why? What drives it

25 out?

1 MEMBER SHACK: 2,000 psi.

2 MEMBER ROSEN: Well, I don't know. It's

3 not acting on the --

4 MEMBER POWERS: It's a cross-section layer

5 of the tube.

6 MEMBER ROSEN: A cross-section area of the

7 tube -- yes.

8 MEMBER KRESS: That's a big pressure.

9 That's a big force.

10 MR. BATEMAN: That whole area of the tube

11 that goes down beneath the pressurizer continues on

12 down until where you have the heater element itself

13 welded in. There's another pressure boundary at the

14 bottom of the sleeve which is where you weld the

15 computer element.

16 MEMBER ROSEN: So that -- it tries to be

17 forced out, but doesn't it butt up against something?

18 MR. BATEMAN: At the bottom?

19 MEMBER ROSEN: Yes, where does it go?

20 MR. MITCHELL: I don't believe there's any

21 structure that you could justifiably would say would

22 prevent that component from being ejected. There's

23 nothing that you would be able to give credit for.

24 MEMBER ROSEN: It's just wires, or cable,

25 or something like that?

1 MEMBER POWERS: Well, I mean if this is to
2 scale, and I think it's roughly to scale here, that
3 device would simply buckle if it ran up against
4 anything.
5 VICE-CHAIRMAN WALLIS: It would spear the
6 surge line.
7 MEMBER SHACK: But I've got 3,000 pounds
8 pushing it out.
9 CHAIRMAN BONACA: Just a question I have,
10 do you think that this operating experience has been
11 factored in in the 50.46 elicitation process? I mean,
12 if this is new information, do you think they
13 considered this?
14 MR. MITCHELL: I cannot speak directly to
15 that, although I have been in part, at least in the
16 early phases of the 50.46 Option 3 work, I've been in
17 communication with the folks who are working on that.
18 A substantial amount of the information regarding,
19 obviously, the potential for primary water stress
20 corrosion cracking was considered by the expert
21 elicitation panel. I can't tell you whether the
22 specific experience with the non-pressure boundary
23 circumferential cracking in the heater sleeve of Palo
24 Verde Unit 2 was brought to the attention of the
25 expert panel in sufficient time for that to figure

1 into their evaluation.

2 CHAIRMAN BONACA: That was my question, in

3 fact.

4 MR. MITCHELL: Okay. Very quickly, just

5 to move to the bottom bullet. Certainly, the Owner's

6 Group provided a final proposal on January 30th with

7 respect to an adequate inspection program, and this

8 was, again, offered up in the context of the

9 inspection of CE pressurizer heater sleeves, because

10 that was the dialogue we were having with them at the

11 time regarding 100 percent bare metal visual

12 inspection of heater sleeves every refueling outage,

13 follow-up NDE to characterize flaw orientation during

14 the refueling outage when leakage was observed, so

15 immediate follow-up characterization. And then

16 potential expansion of the NDE to other non-leaking

17 sleeves if circumferentially oriented cracking was

18 observed in the pressure boundary of the leaking

19 heater sleeve.

20 I should note that we had some subsequent

21 telephone conversations with the industry in which

22 they made it clear that they were not intending to

23 preclude the possibility of licensees taking action to

24 expand their inspection sample if they found

25 circumferential cracking in the non-pressure boundary

1 portion.

2 So based upon that exchange, the staff
3 took this issue to NRR's executive team, and we were
4 directed to develop a proposed bulletin which would be
5 broader in scope than simply the CE pressurizer heater
6 sleeves, but would, in fact, address all of the Alloy
7 82/182/600 materials exposed to the pressurizer
8 environment.

9 So as addressed in the proposed bulletin,
10 an acceptable degradation management program to the
11 staff would include bare metal visual examinations of
12 all 82/182/600 pressurizer penetrations and
13 connections every refueling outage. And then
14 immediate NDE to characterize any evidence of leakage.
15 And then if circumferential cracking is found, either
16 within the pressure boundary or within the non-
17 pressure boundary portion of the penetrations or
18 connections, additional discussion between the
19 licensee and the staff to determine what the
20 appropriate scope expansion would be to determine the
21 extent of condition of their pressurizer. So we've
22 essentially generalized the proposal that was provided
23 by the Westinghouse Owner's Group in their January
24 30th letter.

25 Our slide 9, the proposed bulletin

1 requests generally, the details you'll find actually
2 in the text of the bulletin, a description of
3 pressurizer penetrations and connections, sort of a
4 layout of where particular licensees have this
5 material. A description of the inspection program
6 that has been implemented by the licensee in the past,
7 their plans for future inspections at their upcoming
8 and in future refueling outages. Then an explanation
9 of why their planned inspection program is, in their
10 evaluation, adequate for the purpose of maintaining
11 the integrity of the facility's reactor coolant
12 pressure boundary and meeting all applicable
13 regulatory requirements. And then finally in item 2,
14 after the performance of the inspection, a report of
15 what their results were. So it's a plan and then a
16 response after performing the inspection.
17 MEMBER ROSEN: Which would apply to the
18 next inspection in the fall.
19 MR. MITCHELL: That is correct. Or
20 whatever that licensees next inspection might be. It
21 could be spring of 2005.
22 MEMBER ROSEN: Right. And all to be
23 issued by -- when do you think you'll get this out, so
24 when does the clock -- when does it start?
25 MR. MITCHELL: Again, I don't want to try

1 to put a specific date on it since that might be
2 interpreted as being somewhat predecisional. Again,
3 the staff is -- I can say is working to get this out
4 soon, such that we have ample opportunity to look at
5 the information before the fall outage.
6 MEMBER ROSEN: That's what you said
7 earlier in response to a similar question.
8 MR. MITCHELL: I try to remain somewhat
9 consistent.
10 MEMBER ROSEN: At least with yourself.
11 MR. MITCHELL: Yes. So then with regard
12 to conclusions, obviously, the high operating
13 temperatures in the vicinity of the pressurizer should
14 make these locations highly susceptible to primary
15 water stress corrosion cracking since it is a
16 temperate, in part, driven phenomena.
17 Adequate inspections for the purposes of
18 identifying deposits resulting in flaws may include
19 performing bare metal visual examinations. Adequate
20 inspections are necessary to promptly identify and
21 correct failures to the reactor coolant pressure
22 boundary, to ensure that facilities continue to
23 operate within their technical specifications, which
24 by and large are uniform and do not permit operation
25 with reactor coolant pressure boundary leakage.

1 And again, the staff requests this
2 information so that we may make a determination
3 whether any additional regulatory action would be
4 required.
5 MEMBER FORD: You mentioned at the very
6 beginning, Matt, that you were thinking about another
7 sort of communication relating to surge lines and
8 other large diameter lines. Is that on the books, or
9 what's the plans?
10 MR. MITCHELL: I think what I said was we
11 are considering what options might need to be taken.
12 And that's the phase we are at this point, in terms of
13 --
14 MEMBER FORD: What would trigger you to do
15 that?
16 MR. MITCHELL: I'm certain part of what we
17 will figure in are interactions we continue to have
18 with the industry with respect to their ongoing
19 development of a revision to the MRP 44 Part 1 report,
20 a topic which we should be having discussions on in
21 fact today with the materials and reliability program
22 or project. But it would be fair to say that there is
23 concern amongst the staff regarding the condition and
24 the current inspections which have been performed on
25 piping butt welds. And that there is an interest in

1 having a regulatory footprint to provide assurance
2 that the staff is engaged in making sure that issue
3 comes to a prompt resolution with regard to
4 susceptibility of those bimetallic welds to the
5 primary water stress corrosion cracking.
6 MEMBER FORD: And would you estimate the
7 conditional core damage frequency for a failure of one
8 of these other large diameters lines would be about
9 the same, 10 to the minus 4, 10 to the minus 3?
10 MR. MITCHELL: That answer would be
11 dependent on a number of factors, including whether or
12 not that particular line perhaps was granted leak
13 before break approval in the past, which would have
14 permitted a licensee to remove pipeway restraints, jut
15 impingement shields, which would have been normally
16 installed to mitigate dynamic effects of a rupture.
17 That could significantly change the risk associated
18 with a break of any particular postulate -- I don't
19 think there's a single answer to your question.
20 MEMBER SHACK: But you are going to have
21 to have a residual about leak before break for these
22 sorts of things, because the current situation
23 essentially is not consistent with the assumptions
24 that you made when you granted leak before break. I
25 mean, you sort of skated that one on the summer

1 license renewal because they had actually done some
2 missive to improve the situation. They're probably
3 the only people that have actually done anything.
4 Right?
5 MR. MITCHELL: We certainly recognize
6 those inconsistencies between the basis upon which
7 leak before break approvals were previously granted to
8 these lines which contain dissimilar metal welds, and
9 our current state of knowledge about the potential
10 susceptibility of those welds to primary water stress
11 corrosion cracking. I believe that was publicly
12 acknowledged in a recent response that the staff sent
13 to NEI regarding issues surrounding GSI-191. And the
14 spectrum of breaks to be postulated for sump strainer
15 sizing and the proposal that leak before break might
16 be extended to address that particular topic, and the
17 staff declined to take that action, in part because of
18 this recognized disconnect that's developed regarding
19 PWSCC and the --
20 MEMBER SHACK: Well, there's roughly a
21 third of the fleet that doesn't have the 182 weld.
22 Right? Something like that, PWRs.
23 MR. MITCHELL: Roughly a third.
24 MEMBER SHACK: I'm trying to remember in
25 my head - there are some PWRs that have the 182

1 butter, and there are PWRs that don't. I think about
2 two-thirds do and one-third don't.
3 MR. MITCHELL: It certainly depends upon
4 the design. The majority of the BNW and CE design
5 facilities, obviously, if you're talking about the
6 main coolant loops, because those are --
7 MEMBER SHACK: No, I was thinking
8 Westinghouse plants.
9 MR. MITCHELL: Oh, you're talking
10 Westinghouse plants. I don't remember the numbers.
11 We have received some feedback from the industry in
12 the draft MRP 44 Part 1 --
13 MEMBER SHACK: That's where this is coming
14 -- that's my memory of what's in the draft MRP 44.
15 MR. MITCHELL: You may be correct. It may
16 be one-third/two-thirds, but I can't substantiate that
17 off the top of my head.
18 MEMBER ROSEN: Now unless you get a leak,
19 somebody does the inspections that you're asking for
20 and a leak is found, then you'll get some NDE, which
21 will characterize that sleeve, I assume, in some
22 detail, so you'll know whether that was the only crack
23 that leaked, or whether there were dozens and dozens
24 of cracks and that was just the first one. Unless you
25 get such a leak, you'll not know anything about it.

1 That's a situation I find a little uncomfortable.
2 First off, I don't think -- it probably won't happen.
3 I mean, we'll probably find some leakage, some places
4 where there's some leakage, you'll get some NDE
5 information. But if that didn't happen, then I'm left
6 with not knowing the condition of these sleeves. All
7 I know is that nobody found any leaks. That's good,
8 but the question is, are these sleeves out there with
9 near leaks all over the place?
10 And it seems to me you would want to go in
11 and take a small sample of the ones that aren't
12 leaking, and just do some NDE just to say yes, they're
13 not leaking and there's no evidence of any crack. Or
14 they are not leaking, but my gosh, there's dozens and
15 dozens of small cracks in these things. You'd want t
16 know which situation you're in.
17 MR. MITCHELL: And I think we can
18 sympathize certainly with that type of a desire. The
19 thing the staff has had to consider, particularly with
20 regard to doing any types of inspections to these
21 heater sleeves for the CE design facilities is, you
22 could only call this a non-destructive examination in
23 the most broad sense of the word, because you actually
24 have to cut the pressure boundary lower on that sleeve
25 to take the sleeve out to get access to do that

1 inspection in the first place. And I think we have
2 concerns regarding radiation exposure, the potential
3 for actually making the situation worse by having
4 someone have to cut the pressure boundary and then
5 reweld it lower down in order to put the heater
6 sleeves back in place. It's not -- this is not a
7 readily accessible location to do these inspections;
8 hence, we have at least -- until we have further
9 evidence that circumferential cracking of the pressure
10 boundary is a real phenomena which is beginning to
11 manifest itself, we are relying at this time on 100
12 percent bare metal visuals, and our analytical
13 knowledge regarding the low likelihood of a
14 circumferential flaw in the pressure boundary leading
15 to a complete sever. I do certainly sympathize with
16 the thought, but there are some practical
17 considerations that are very real.
18 MEMBER ROSEN: Yes. I'm not talking about
19 a broad scale thing. I'm just talking about a one time
20 or several time verification that sleeves that are not
21 showing any leakage are, in fact, not cracking, just
22 as a -- it's not academic. Anyway, I've said my
23 peace.
24 MEMBER SHACK: This is a statistical sort
25 of thing. I mean, you would expect a relatively small

1 fraction of these things to be cracked. And,
2 therefore, your odds of picking the right one to look
3 at, you know, unless you're going to look at a
4 reasonable number, I'm not sure that you could take a
5 whole lot of confidence, and I have to sort of sift
6 through and figure out a sample size, but looking at
7 a couple wouldn't buy you much comfort.
8 MR. BATEMAN: Yes. We actually got into
9 a discussion when we were talking about the upper
10 vessel head, and our statistician at the NRC said you
11 don't gain any confidence from inspecting any less
12 than the full amount when you're talking about these
13 small quantities.
14 MEMBER FORD: Just for the benefit of
15 those members who were not at the subcommittee
16 meeting, this presentation being given by Bill and
17 Matt was for information purposes. They were not
18 requiring us to write a letter on this. Many of
19 these topics will come up again in our June the 1st
20 subcommittee meeting, which is the wider issue of the
21 whole question of PWSCC. If there aren't any more
22 questions from the group - anybody else? I hand it
23 back to you, John. Thank you very much indeed, Bill
24 and Matt.
25 CHAIRMAN BONACA: Thank you.

1 MEMBER POWERS: I want to just interject,
2 I appreciate very much the forbearance of the speaker
3 and the clarity and care of this --
4 MR. MITCHELL: My pleasure.
5 CHAIRMAN BONACA: Thank you.
6 MR. MITCHELL: Thank you.
7 CHAIRMAN BONACA: With that, we have some
8 time before noon time, and the first thing I'd like to
9 do is to do the conciliation of the ACRS comments.
10 We'll go off the record now.
11 (Whereupon, the proceedings in the above-
12 entitled matter went off the record at 11:34 a.m.)
13
14
15
16
17
18
19
20
21
22
23
24
25

CERTIFICATE

This is to certify that the attached proceedings before the United States Nuclear Regulatory Commission in the matter of:

Name of Proceeding: Advisory Committee on Reactor Safeguards 511th Meeting

Docket Number: n/a

Location: Rockville, MD

were held as herein appears, and that this is the original transcript thereof for the file of the United States Nuclear Regulatory Commission taken by me and, thereafter reduced to typewriting by me or under the direction of the court reporting company, and that the transcript is a true and accurate record of the foregoing proceedings.

Rebecca Silberman

Rebecca Silberman
Official Reporter
Neal R. Gross & Co., Inc.

GINNA STATION

ACRS PRESENTATION

April 16, 2004

ACRS PRESENTATION
APRIL 16, 2004
GINNA STATION
AGENDA

- Plant Design/Operational Issues
- Major Equipment Replacement/Repairs
- LRA Preparation/Results
- Completed Items/Resolved Open Items
- Programs
- Commitments/Tracking
- Plant Ownership

Plant Design/Operational Issues

- Westinghouse 2-loop 1520 MWt PWR
- Initial license granted September 18, 1969
  - Power Uprate - 1972
  - Systematic Evaluation Program
  - POL-FTOL 12/10/84
  - CP-OL Recapture 8/9/91
  - Improved Standard Tech Specs - 1996
- Performance Indicators all green
- Plant sale anticipated mid-2004

SYSTEMATIC EVALUATION PROGRAM

- Program included all plants with provisional operating licenses, began in 1977
- Compare Ginna to then-current SRP
- 92 topics reviewed
- resulted in well-documented CLB
- HELB, seismic, tornadoes, CIVs

MAJOR EQUIPMENT REPLACEMENT/REPAIRS

- Steam Generator Replacement - 1996
- Baffle-Barrel Bolt Inspection/Replacement - 1999
- Reactor Vessel Head Replacement - 2003
  - Alloy 600 Minimization
- Lower Head (BMI) Inspection - 2003
- Sump "B" Inspection - 2003
- Investigate Uprate

LRA PREPARATION/RESULTS

- Primarily in-house matrixed staff with specialty contractors
- LRA prepared following guidance of NEI 95-10 in SRP format, using GALL (3rd plant)
- NRC-Ginna interaction good - All scheduled milestones met
- Programs
- Commitments

COMPLETED ITEMS/OPEN ITEM RESOLUTION

- 10 CFR 50.49 Calculations
- Equivalent Margins Analysis
- SBO Recovery Scope

FRACTURE TOUGHNESS -RV

- Equivalent margins analysis (elastic-plastic fracture mechanics) for limiting beltline weld showed substantial margin per ASME Section XI, App. K for ductile flaw extension and tensile stability.

	J_{app}	J_R	J_R/J_{app}	Appendix K Criteria
• Levels A&B	103 lb/in	596 lb/in	5.79	≥ 1.0
• Levels C&D	243 lb/in	703 lb/in	2.89	≥ 1.0

PROGRAMS

<u>34 Total</u>

4 New

30 - Existing

- 3 Not in GALL
- 12 Consistent with GALL
- 8* Consistent with exceptions
- 8* Enhancements

*Fire Water System Program in Both Categories

COMMITMENTS/TRACKING

- 37 Commitments in SER App. A
- 122 Individual Commitments
- All included in Commitment/Action Tracking System and assigned to plant staff
- Some changes anticipated due to power uprate (e.g., Reactor Vessel Surveillance Program)

CHANGE IN OWNERSHIP

- on schedule for June timeframe
- all commitments transfer to Constellation

R.E. GINNA NUCLEAR POWER PLANT

License Renewal
Safety Evaluation Report

ACRS Full Committee Meeting
Russell Arrighi
Project Manager
April 16, 2004

Overview

- July 30, 2002: Ginna submitted license renewal application
- November 4, 2003: ACRS Subcommittee Meeting
- March 4, 2004: Final SER issued
- Current license expires September 18, 2009
- Request license renewal through September 18, 2029

Staff Conclusions

- The applicant has met the requirements for license renewal, as required by 10 CFR 54.29:
  - Actions have been identified and have been or will be taken such that there is reasonable assurance that activities will continue to be conducted in accordance with the current licensing basis in the renewal term.
- Requirements of 10 CFR 51 have been satisfied.

NRC Audits and Inspections

- TWO AUDITS AND TWO INSPECTIONS
  - Scoping and Screening Methodology Audit
    - December 9 - 13, 2002
  - Aging Management Program Audit
    - June 23 - 25, 2003
  - Scoping and Screening Inspection
    - June 23 - 27, 2003
  - Aging Management Program Inspection
    - July 21 – 25 and August 4 - 8, 2003

Aging Management Program

- 34 AMPs credited for license renewal
  - 31 AMPs consistent with GALL
  - 3 AMPs are non-GALL programs

- 2 AMP was added as a result of staff review

Open/Confirmatory Items

All items adequately resolved.

- Open Item 2.3.3.6 -1
  The fire service water booster pump (jockey pump) was not in scope.

- Open Item 2.5 -1
  Two cables from the offsite power path that brings power to safety buses were not in scope.

- Open Item B2.1.36 -1
  Several of the program attributes for the Thimble Tube Inspection Program required clarification.

- Open Item 4.2.2 -1
  Review surveillance data and methodology used to determine the chemistry factor and to confirm that the results satisfy 10 CFR 50.61.

Time Limiting Aging Analysis

- The applicant has identified the appropriate TLAAs and had demonstrated or is committed to demonstrate that the TLAAs:
  - (i) Will remain valid for the period of extended operation;
  - (ii) Have been projected to the end of the period of extended operation; or
  - (iii) The aging effects will be adequately managed for the period of extended operation.

TLAAs (Continued)

ENVIRONMENTAL QUALIFICATION

- Applicant has adequately identified the TLAA for EQ components as defined in 10 CFR 54.3
- The effects of aging will be adequately managed during the period of extended operation

TLAAs (Continued)

Reactor Vessel Upper Shelf Energy

Reactor Vessel Upper Shelf Energy (USE)	Screening Criteria (FT-LBS)	Ginna (FT-LBS)@ EOL
Beltline Welds	50	41*

* Equivalent Margins Analysis

Pressurized Thermal Shock

Beltline Welds	RT_{PTS} Criterion, °F	Calculated RT_{PTS}, °F
SA - 847	≤ 300	271

License Conditions

- License conditions:
  - Include UFSAR supplement in the next UFSAR update,
  - Surveillance capsule withdrawal, testing, and storage for the period of extended operation.

Proposed Bulletin on Inspection of Alloy 82/182/600 Pressurizer Penetrations and Steam-Space Piping Connections

Matthew A. Mitchell, Senior Materials Engineer
Materials and Chemical Engineering Branch
Office of Nuclear Reactor Regulation

Presentation for the
Advisory Committee on Reactor Safeguards

April 16, 2004

Presentation Message

- The NRC staff has developed a proposed bulletin to address the inspection of Alloy 82/182/600 locations in or near the pressurizer boundary and susceptible to primary water stress corrosion cracking

- The proposed bulletin requests information from pressurized water reactor licensees regarding their past, present, and future inspection plans for these locations and their basis for concluding that their planned inspection program is adequate

- It is the NRC staff's position that the information requested by the proposed bulletin is necessary for the staff to determine if additional regulatory action is required

Operational Experience

- Extensive facility operating experience has demonstrated that Alloy 82/182/600 materials exposed to the environment present in the pressurizer of pressurized water reactors (PWRs) can lead to primary water stress corrosion cracking (PWSCC) of these materials
  - Alloy 600 pressurizer heater sleeves at Combustion Engineering-designed facilities
  - Alloy 600 diaphragm plates in pressurizer heater bundles at Babcock and Wilcox-designed facilities
  - Alloy 82/182 weld connections for pressurizer instrument lines
  - Alloy 82/182 butt welded connections in spray lines and safety and relief valve lines

- This is should be expected since the environment of the pressurizer consists of water and steam at a temperature of about 650 °F, approximately 50 °F warmer than reactor pressure vessel (RPV) upper heads and 100 °F warmer than RPV lower heads, where PWSCC has also been observed

Pressurizer Diagram

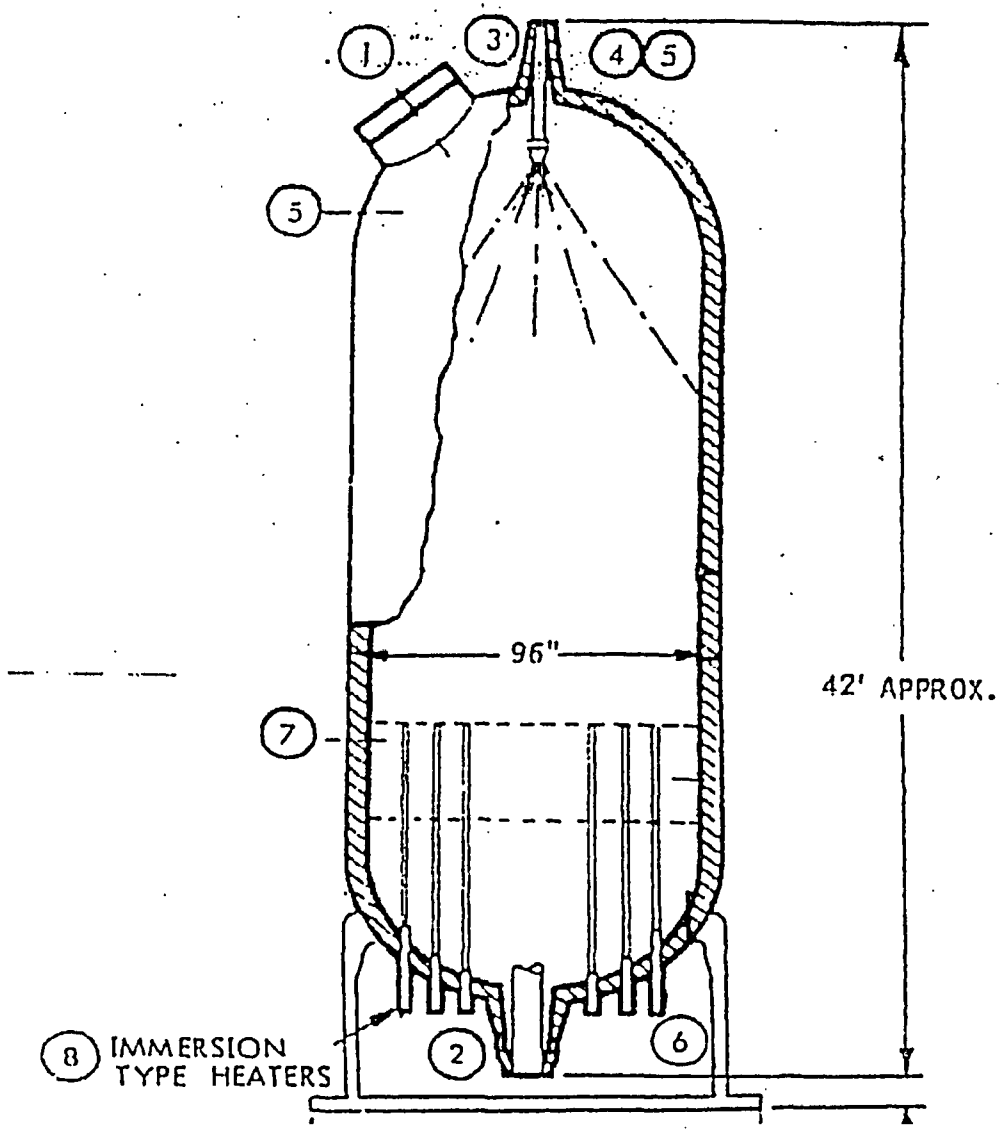

Operational Experience (Cont.)

- Recent operational experience at both domestic and foreign facilities has caused the staff to focus on the inspection of these pressurizer penetrations and steam-space piping connections.
  - In Fall 2003, leakage was observed from pressurizer heater sleeves at Millstone 2 and Waterford 3 and confirmed to be the result of axially-oriented PWSCC in the pressure boundary portion of the heater sleeves
  - In October 2003, Palo Verde 2 discovered circumferentially-oriented PWSCC in the non-pressure boundary portion of five pressurizer heater sleeves during a planned activity to replace the pressure boundary portion of the unit's heater sleeves with Inconel Alloy 690 half-nozzles
  - In September 2003, inspections at Tsuruga Unit 2 in Japan found evidence of axially-oriented PWSCC in the nozzle-to-safe end butt welds in lines leading to the facility's safety and relief valves. Similar to circumferentially-oriented PWSCC found in lines at Palisades in 1993.
  - In November 2003, TMI 1 found PWSCC in heat affected zone of seal weld of pressurizer heater bundle diaphragm plate

Initial NRC Actions

- The NRC staff engaged the industry about the potential implications of the Palo Verde 2 experience and the management of PWSCC in pressurizer heater sleeves at CE-designed facilities

  Requested that Owners Group provide:

  - Operability assessment to justify continued operation of the facilities over the near term

  - Long-term inspection program for addressing this issue which must provide the staff with assurance that:

    (1) unacceptable degradation of the heater sleeves or of the pressurizer head will be identified, characterized, and corrected, and

    (2) the extent of degradation of the pressurizer heater penetrations at the affected facility will be adequately understood

Industry Response

- Operability assessment submitted to NRC on December 23, 2003
  - Proposed a basis upon which to conclude that continued operation of the CE-designed fleet is justified (similar to RPV head analyses)
  - Documented inspections which are currently performed by licensees, not all of whom have been performing bare metal visual (BMV) inspections
- Final Owners Group proposal on inspection program submitted by letter dated January 30, 2004
  - 100 percent BMV of all heater sleeves every refueling outage
  - Followup NDE to characterize flaw orientation during refueling outage when leakage is observed by BMV
  - Expansion of NDE (to be determined through discussion with the NRC) if circumferentially-oriented cracking observed in pressure boundary portion of the leaking heater sleeve

NRC Actions

- Upon presenting the issue of PWSCC of pressurizer heater sleeves at CE-designed facilities to the NRR Executive Team, the staff was directed to develop a proposed bulletin which would address the broader issue of Alloy 82/182/600 materials exposed to the pressurizer environment

- As addressed in the proposed bulletin, an acceptable degradation management program would include:

  - Performing bare metal visual examinations of all Alloy 82/182 pressurizer heater penetrations and connections every refueling outage

  - If leakage is found, before returning to service, perform NDE to characterize the degradation present in the leaking penetration/connection and determine if circumferentially oriented flaws are present

  - If circumferential cracking is found, NDE examination of additional non-leaking penetrations or connections should be discussed with NRC staff in regards to support an extent of condition determination

Proposed Bulletin 2004-xx

- Proposed Bulletin 2004-xx requests:

  (1)(a) Description of pressurizer penetrations and connections

  (1)(b) Description of inspection program that has been implemented by licensee in the past

  (1)(c) Description of inspection program that the licensee intends to implement at the next, and future, refueling outages

  (1)(d) An explanation of why the inspection program identified in your response to item (1)(c) s adequate for the purpose of maintaining the integrity of the facility's reactor coolant pressure boundary and for meeting all applicable regulatory requirements

  (2) Results from next pressurizer Alloy 82/182 penetration/connection inspections, a description of the inspections if different from that given in response to (1)(c) (with a supplemented (1)(d) response)

Conclusions

- The high operating temperatures associated with pressurizer penetrations and connections make them highly susceptible to PWSCC

- Adequate inspections for the purpose of identifying deposits resulting from PWSCC flaws may include performing bare metal visual examinations

- Adequate inspections of the subject locations are necessary to promptly identify and correct failures of the reactor coolant pressure boundary, operation with which is contradictory to facility technical specifications

- The information requested by the bulletin is necessary for the staff to determine if additional regulatory action is required

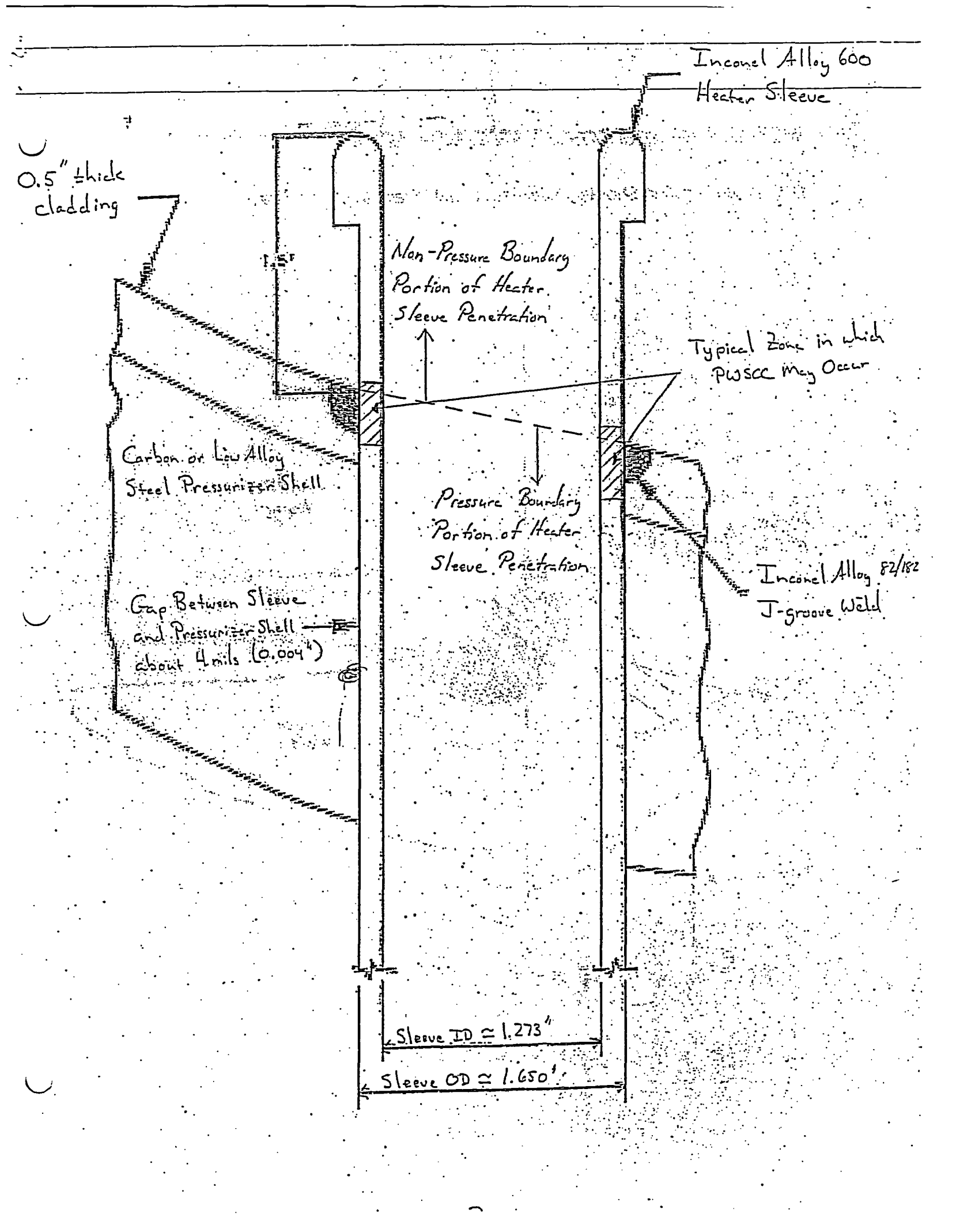
Inconel Alloy 600
Heater Sleeve
0.5" ±thick
cladding
Non-Pressure Boundary
Portion of Heater
Sleeve Penetration
Typical Zone in which
PWSCC May Occur
Carbon or Low Alloy
Steel Pressurizer Shell
Pressure Boundary
Portion of Heater
Sleeve Penetration
Inconel Alloy 82/182
J-groove Weld
Gap Between Sleeve
and Pressurizer Shell
about 4 mils (0.004")
Sleeve ID ≃ 1.273"
Sleeve OD ≃ 1.650"

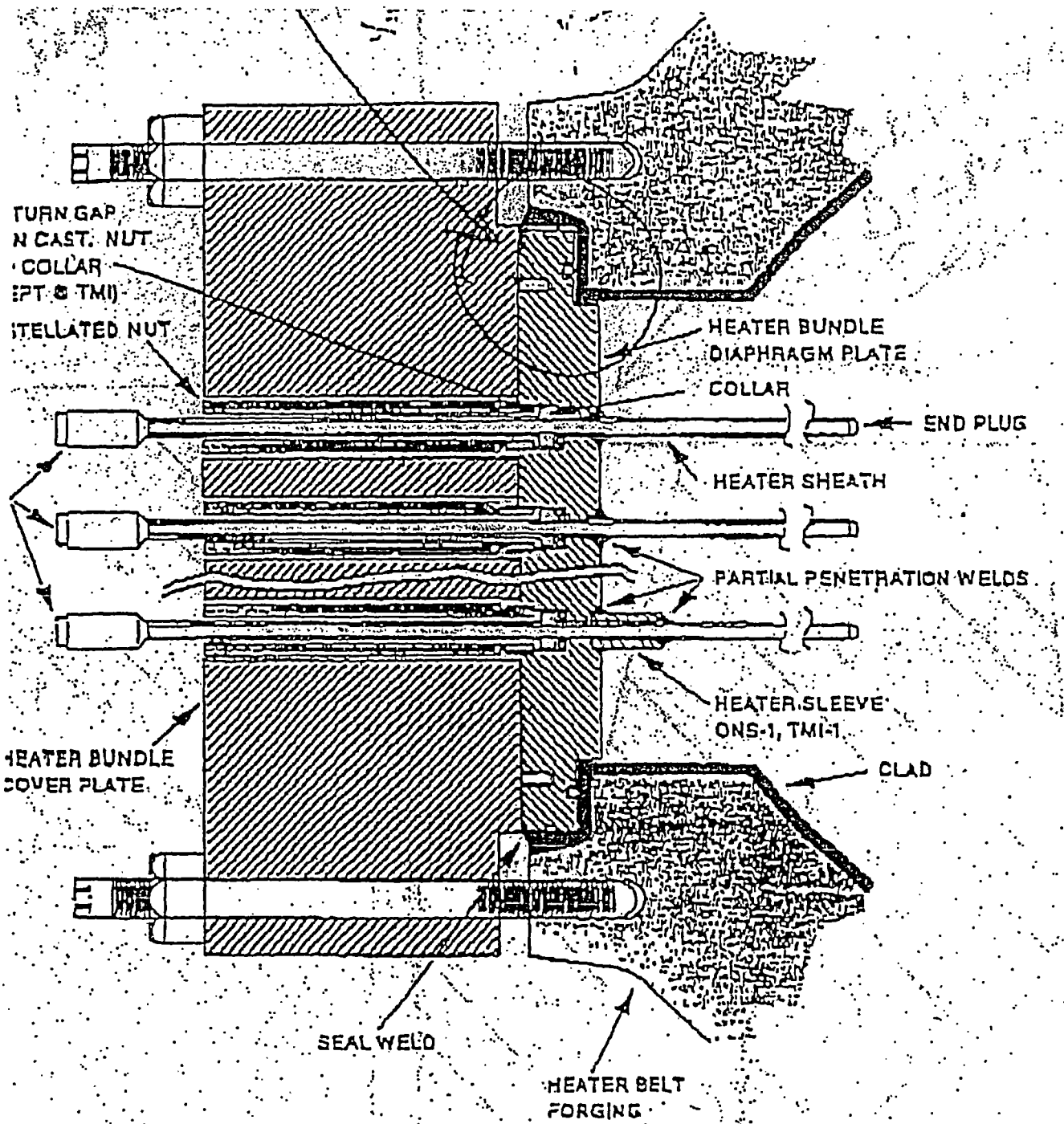
TURN GAP
N CAST. NUT
COLLAR
EPT & TMI)
ITELLATED NUT
HEATER BUNDLE
DIAPHRAGM PLATE
COLLAR
END PLUG
HEATER SHEATH
PARTIAL PENETRATION WELDS
HEATER SLEEVE
ONS-1, TMI-1
HEATER BUNDLE
COVER PLATE
CLAD
SEAL WELD
HEATER BELT
FORGING

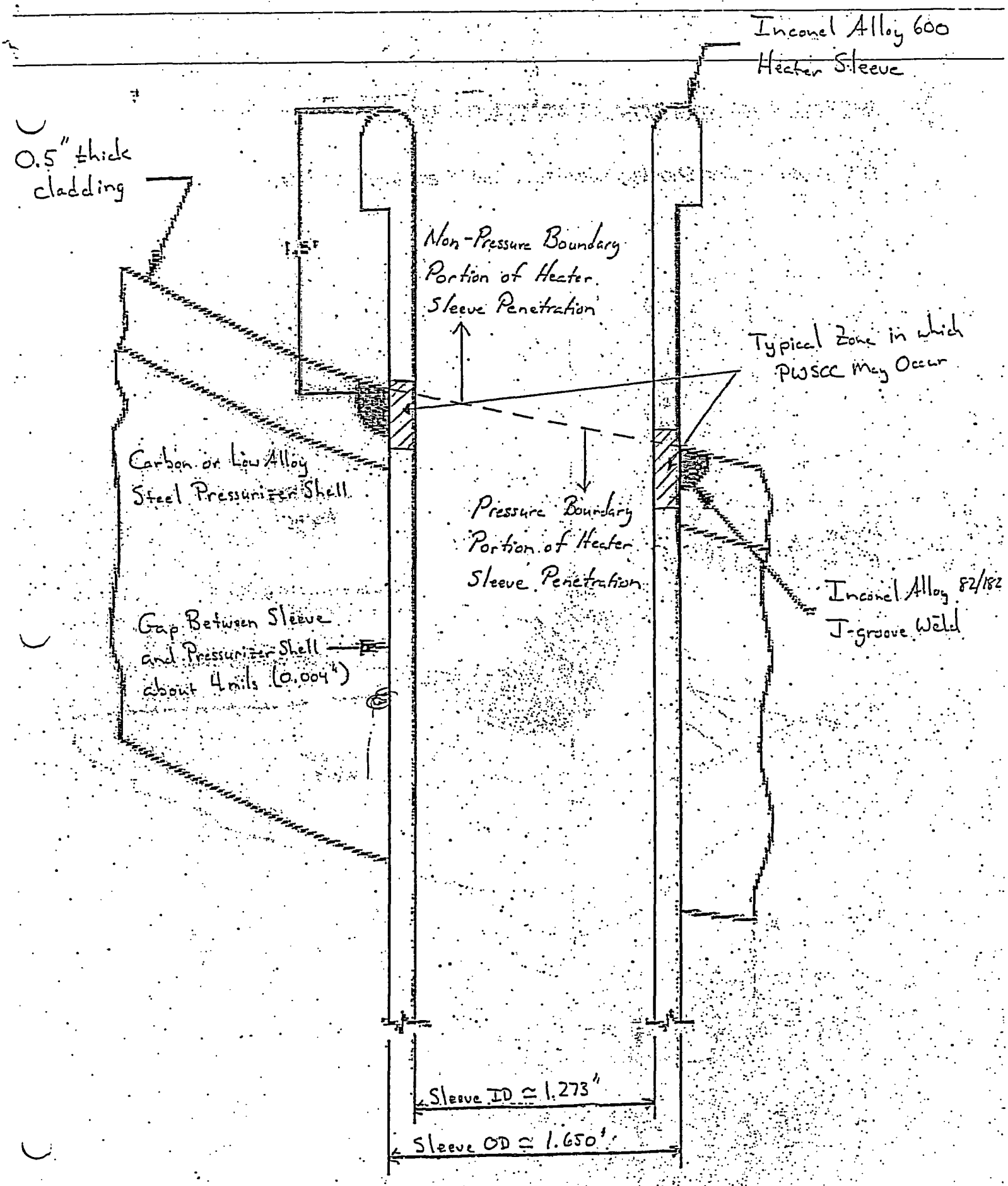
Inconel Alloy 600
Heater Sleeve
0.5" thick
cladding
Non-Pressure Boundary
Portion of Heater
Sleeve Penetration
Typical Zone in which
PWSCC May Occur
Carbon or Low Alloy
Steel Pressurizer Shell
Pressure Boundary
Portion of Heater
Sleeve Penetration
Inconel Alloy 82/182
J-groove Weld
Gap Between Sleeve
and Pressurizer Shell
about 4 mils (0.004")
Sleeve ID ≃ 1.273"
Sleeve OD ≃ 1.650"

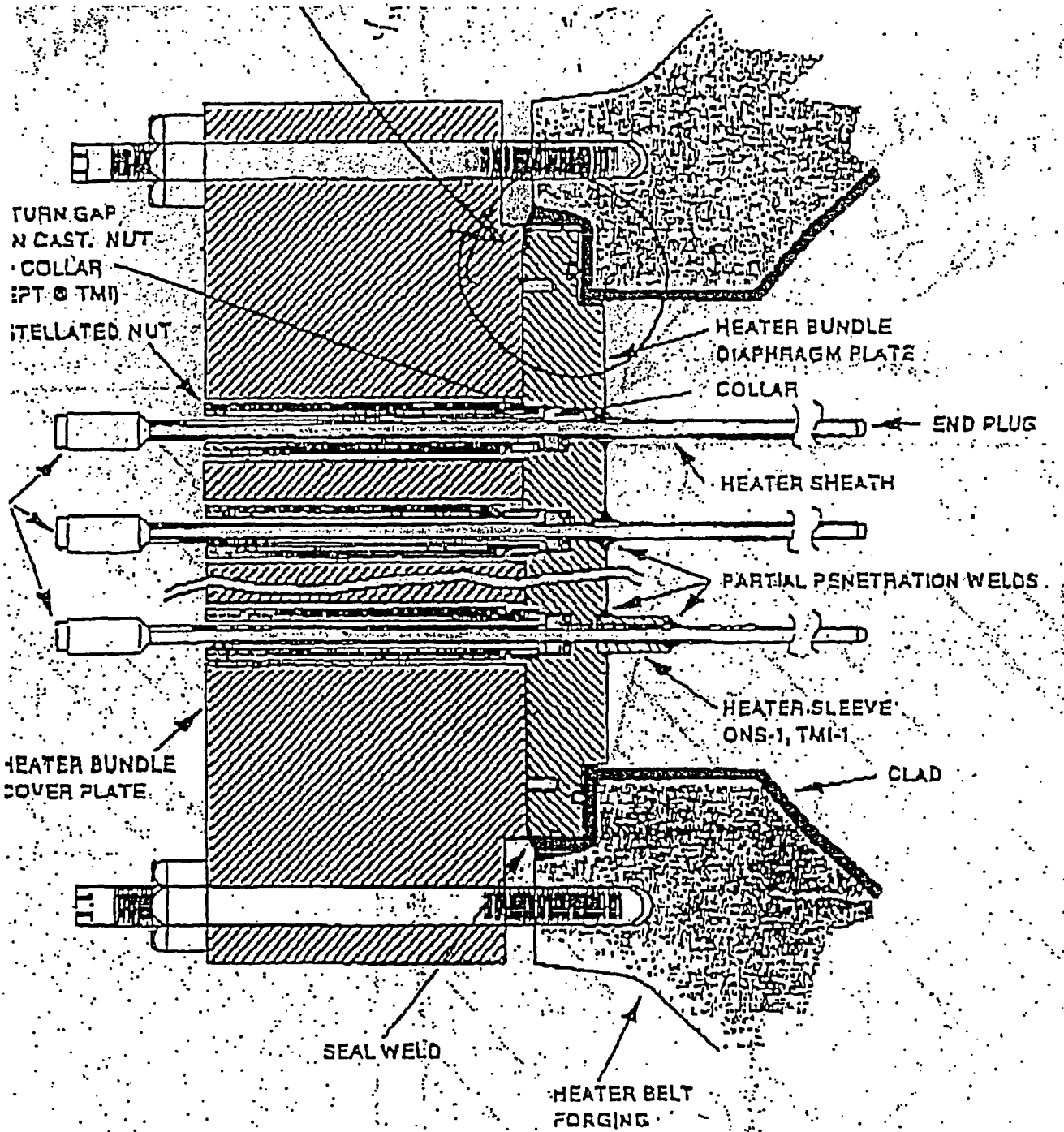
TURN GAP
N CAST. NUT
COLLAR
EPT @ TMI)
ITELLATED NUT
HEATER BUNDLE
DIAPHRAGM PLATE
COLLAR
END PLUG
HEATER SHEATH
PARTIAL PENETRATION WELDS
HEATER SLEEVE
ONS-1, TMI-1
HEATER BUNDLE
COVER PLATE
CLAD
SEAL WELD
HEATER BELT
FORGING