**ATTACHMENT 1**

Clinton Power Station Setpoint Calculation IP-C-0087

# CALCULATION COVER SHEET



| DEPT | DIV | CALCULATION NO | REVISION | ADDENDUM | VOLUME |
|---|---|---|---|---|---|
| C | NSED | IP-C-0087 | 0 | --- | A |

TITLE: SETPOINT CALCULATION FOR SUPRESSION POOL HIGH - HPCS; TRANSMITTERS 1E22N055C&G

## SIGNATURE BLOCK

PREPARED BY C. W. HALLETT (PRINT)
7/24/01 (DATE) — C W Hallett (SIGNATURE) — Assignment Card 2001-07-01

CHECKED BY J. M. ASHCRAFT (PRINT) — Assignment Card
7/24/01 (DATE) — JM Ashcraft (SIGNATURE) — 2001-05-02

REVIEWED BY J. M. ASHCRAFT (PRINT) — Assignment Card
7/24/01 (DATE) — JM Ashcraft (SIGNATURE) — 2001-05-02

APPROVED BY P. R. MARCUM (PRINT)
7/25/01 (DATE) — Paul Marcum (SIGNATURE)

## OWNER'S REVIEW NON-CPS CALC

REVIEWED BY
/ / (DATE) — N/A (PRINT) — (SIGNATURE)

CORP PREPARED THIS CALC: CPS

QUALITY RELATED: YES [✓] NO [ ]

## CONFIRMATION REQUIRED

YES/NO: NO PAGE NO(S): CONFIRMED:

## Field Work To Be Performed Per ECN Listed Below

| ECN NO | DESIGN RELEASED DATE | CID UPDATED |
|---|---|---|
| ~~333801~~ | and 12.2.03 | |
| AR 78522-11 | | |
| AR 78721-02 | | |

ECN's listed above shall include "Volume Report" as Affected Documents.

## READY FOR INCORPORATION

YES/NO/(N/A): NO ASSIGNED TO: A DATE RFI:

COMMENTS:
AR 78522-11 is tracking ITS revision
AR 78721-02 is tracking ORM revision

NF-161.01-1 R/0 (02/99)

ACN 1/1

## CALCULATION BATCH LIST

(May use computer print out and attach it with cover sheet or specify it's location if provided elsewhere in the calculation.)

IS THIS A PARENT CALC: YES ✓ NO

**DEPENDENT CALCULATIONS** (Enter either a Parent, Revision, Alias, Addendum or Volume in the relationship column)

| # | RELATIONSHIP | DEPT | DIV | CALCULATION NO | REV | ADD | VOL | STATUS BEFORE | STATUS AFTER |
|---|---|---|---|---|---|---|---|---|---|
| 1 | VOLUME | C | NSED | IP-C-0087 | 0 | --- | A | U | A |

**IMPACTED CALCULATIONS** (Enter either an Input, Output, Supplements, or Supersedes in the relationship column)

| # | RELATIONSHIP | DEPT | DIV | CALCULATION NO | REV | ADD | VOL | STATUS BEFORE | STATUS AFTER |
|---|---|---|---|---|---|---|---|---|---|
| 1 | SUPERCEDES | M | CID | CI-CPS-142 | 3 | --- | --- | A | S |
| 2 | SUPERCEDES | M | CID | CI-CPS-143 | 3 | --- | --- | A | S |
| 3 | INPUT | C | NSED | IP-C-0089 | 0 | --- | --- | A | A |

**REFERENCED CALCULATIONS** (Not included as Dependent or Impacted Calculations. Enter Referenced in the relationship column)

ACN 1/1

| # | RELATIONSHIP | DEPT | DIV | CALCULATION NO | REV | ADD | VOL |
|---|---|---|---|---|---|---|---|

# CALCULATION COVER SHEET (Continued)



| C | NSED | IP-C-0087 | 0 | --- | A |
|---|---|---|---|---|---|
| DEPT | DIV | CALCULATION NO | REVISION | ADDENDUM | VOLUME |

System Code(s) (or NA): HP

Equipment Identification No. (EINs) (or NA): 1E22N055C&G; 1E22N655C&G

Support Number(s) (or NA): NA Location (Bldg/Elev/Area (or NA): NA

Historic ☐ Microfiche Attached: Yes ☐ No ☑ Topic Code: M98

Temporary: ☐

ACN 1/1

## NON-CALC INPUTS/OUTPUTS/REFERENCES

(Specify the Location, if provided elsewhere in the calculation)
(Identify in Relationship Column)

| # | DOC TYPE | DOC NO | SHT NO | REV NO | DATE | DESCRIPTION | Relationship (I,O,R) |
|---|---|---|---|---|---|---|---|
| | | | | | | SECTION 4 | I |
| | | | | | | SECTION 5 | O |
| | | | | | | SECTION 6 | R |

# REVISION HISTORY



| C | NSED | IP-C-0087 | 0 | — | A |
|---|---|---|---|---|---|
| DEPT | DIV | CALCULATION NO | REVISION | ADDENDUM | VOLUME |

REVISION OBJECTIVE: ORIGINAL CALCULATION

WHAT INITIATED CHANGE: NA

AFFECTED PAGES: NA

NF-161.01-4 R/0 (02/99)

Note: Preparer provide explicit instructions for volume/Addendum Calculations to be Incorporated using "Administrative Revisions".

TABLE OF CONTENTS

## 1.0 OBJECTIVE

1.1 To determine the instrument uncertainty, setpoint, and Allowable Value for Suppression Pool High – HPCS, instruments 1E22N055C & G and 1E22N655C & G respectively.

1.2 This calculation evaluates the adequacy of the current setpoints in relationship to the results of 1.1 above.

1.3 The setpoint and Allowable Value for Suppression Pool High - HPCS was originally calculated and transmitted in S&L Calculations CI-CPS-142 and 143. This calculation supercedes S&L Calculations CI-CPS-142 and 143 (References 6.8 & 6.9).

## 2.0 ASSUMPTIONS

2.1 Published instrument vendor specifications are considered to be $2\sigma$ values unless specific information is available to indicate otherwise. (Ref. 6.1, Section 4.1.3.4).

2.2 Temperature, humidity, power supply, and ambient pressure errors have been incorporated when provided by the manufacturer. Otherwise, these errors are assumed to be included in the manufacturer's accuracy or repeatability (Ref. 6.1, Section 4.3.1 and Appendix A, Section A.2.1).

2.3 Changes in ambient humidity are assumed to have a negligible effect on the uncertainty of the instruments used in these loops (Ref. 6.1, Appendix I, Section I.2).

2.4 Normal radiation induced errors have been incorporated when provided by the manufacturer. Otherwise, these errors are assumed to be small and capable of being adjusted out each time the instrument is calibrated. Therefore, unless specifically provided, normal radiation errors can be assumed to be included within the instrument drift errors (Ref. 6.1, Appendix I, Section I.1).

2.5 If the manufacturer's instrument performance data does not specify Span, Calibrated Span (CS), Upper Range Limit (URL), etc. the calculation will assume URL because it will result in the most conservative estimate of instrument uncertainty. In all cases the URL is greater than or equal to the CS and it is conservative to use the URL in calculating instrument uncertainties. This is because, by definition, URL is the maximum upper calibrated span limit for the device (Ref. 6.1, Section 2.2.92).

2.6 This analysis assumes that the instrument power supply stability (PSS) is within ±5% (±1.2 Vdc) of a nominal 24 Vdc (Ref. 6.1, App. I, Section I.11).

2.7 The Drift Effect will be determined with the assumption of a 30 month calibration interval (24 month nominal plus 25%). Drift will be determined using vendor provided data. Where vendor data is unavailable, drift will be determined in accordance with Reference 6.1.

2.8 It is assumed that the M&TE listed in Section 7.0 of the calibration procedures is calibrated to the required manufacturer's recommendations and within the manufacturer's required environmental conditions. Temperature related errors are based on the difference between the manufacturer's specific calibration temperature and the worst case temperature at which the device is used (Ref. 6.7 and Ref. 6.1, Appendix H.1).

2.9 Per Reference 6.1, it is assumed that the reference standards used for calibrating M&TE or Calibration tools shall have an uncertainty requirement of not more than ¼ of the tolerance of the equipment being calibrated. A greater uncertainty may be acceptable as limited by "State of the Art". It is generally accepted that the published vendor accuracy of the M&TE or Calibration tool includes the uncertainty of the calibration standard M&TE when the 4:1 accuracy standard is satisfied. Hence, Calibration Standard uncertainty is considered negligible to the overall calibration error term and can be ignored. This assumption is based primarily upon inherent M&TE conservatism built into the calculation.

2.10 Review of historical maintenance work requests for the loop indicates the effects associated with EMI and RFI have not resulted in equipment failure or degraded performance during the life of the plant. In addition, vendor performance specifications and qualification test reports do not provide an instrument error specification for the effects of EMI and RFI. As such, any effect related to EMI and RFI are assumed to be negligible. (Ref. 6.1, Section 4.3.1 and Appendix A, Section A.2.1).

2.11 Input 4.9 concludes "Accurate control of pool level is not needed after a blowdown during a large or intermediate break event. Therefore, an instrument error caused by post accident harsh environments during a large or intermediate break LOCA are not critical consideration for this instrument." Therefore, this calculation considers only the effects of a seismic event to establish the worst case scenario for the instrumentation being evaluated.

2.12 Per Reference 6.1, Section 4.1.2.2, CPS assumes that functions associated with setpoints will function in their first trip during an event, the point in time when they and they alone, are most relied upon for plant safety. Worst case environmental conditions, that assume failure of protective equipment, or conditions that would only exist after the point of time where manual operator action is expected, are not applicable to the automatic trip functions that are expected or relied upon to occur in the early part of an event. However, the plant operating conditions under which the automatic trip must be operable should be evaluated.

While the design documentation identifies that the Suppression Pool Level-High setpoints are established based upon pool loading analysis, the associated process limit for the setpoint was not specified. However, discussions with GE personnel along with written correspondence, indicates the level control function is intended for use during controlled shutdown with Safety Relief Valve (SRV) and Low Low Set (LLS) and is not intended for the post LOCA blowdown conditions (Input 4.9). As such, this calculation assumes the worst rational environmental condition at the time of trip operation will not result in harsh temperature conditions concurrent with high humidity, particularly steam environments, or harsh radiation levels. Therefore, it is assumed that accident radiation effects and the error attributed to IRA are negligible.

## 3.0 METHODOLOGY

This calculation will determine the instrument uncertainty associated with the Suppression Pool High – HPCS differential pressure transmitter(s). The Evaluation will determine the loop setpoint and Allowable Value for the Suppression Pool High – HPCS switchover function on high level. Instrument uncertainty will be determined in accordance with Reference 6.1, CI-01.00, "Instrument Setpoint Calculation Methodology." The evaluation will then compare the current setpoint and Allowable Value with the results determined by this calculation.

M&TE error will be determined from the results of Calculation IP-C-0089 (Input 4.6.1) which uses building temperature minimum and maximums to develop the uncertainty, and review of the corresponding loop and device calibration procedures (Input 4.16).

Per Reference 6.1, Head Correction is determined by evaluating design drawings, survey data, and/or walk down data as applicable.

## 4.0 INPUTS

4.1 P&IDs

4.1.1 M10-9074, sheet 3, Rev. B, "P&ID/C & I High Pressure Core Spray System (HP)".

4.2 Technical Manuals

4.2.1 K2801-0175, Tab 17, Rev. 34, "Instruction Manual, Model PD3218 Remote Diaphragm Differential Pressure Transmitter, DMM-2340" dated August, 1984.

4.3 System Design Criteria

4.3.1 DC-ME-09-CP, Rev. 11, "Equipment Environmental Design Conditions Design Criteria", (Zone Code H-4, Map Code F.2.1, General Area, El. 737'-0", page 60; Zone Code H-5, Map Code F.1.1, General Area, El. 712'-0", page 60; Zone Code M-24, Map Code D.6.2, Main Control Room & Electric Panel Room, El. 800'-0", page 49).

4.4 CPS Drawings

4.4.1 E02-1HP99 Sheet 003, Rev. K, "Schematic Diagram, High Pressure Core Spray System (NSPS)".
4.4.2 E02-1HP99 Sheet 005, Rev. F, "Schematic Diagram, High Pressure Core Spray System (NSPS)".
4.4.3 E02-1HP99 Sheet 006, Rev. D, "Schematic Diagram, High Pressure Core Spray System (NSPS)".
4.4.4 E02-1HP99 Sheet 009, Rev. K, "Schematic Diagram, High Pressure Core Spray System (NSPS)".
4.4.5 M28-1001-05A-K Sheet 001, Rev. R, "Control and Instrumentation Piping Fuel Building Floor EL> 737'-0""
4.4.6 HP-913 Sheet 1, Rev. 3, "Fuel Building High Pressure Core Spray Piping"
4.4.7 HP-914 Sheet 1, Rev. 4, "Fuel Building High Pressure Core Spray Piping"
4.4.8 M01-1600 Sheet 6, Rev. A "Environmental Zone Map Auxiliary, Fuel & Containment Basement Floor Plan El 707'-6" & 712'-0""
4.4.9 M01-1600 Sheet 7, Rev. A "Environmental Zone Map Auxiliary, Fuel & Containment Grade Floor Plan El 737'-0""
4.4.10 M01-1600 Sheet 18, Rev. A "Environmental Zone Map Control Building Main Floor Plan El. 800'-0""
4.4.11 E30-1004-00A-EI, Rev. F, "Electrical Installation Main Control Room Control Bldg. Main FLR-EL.800'-0""
4.4.12 E03-1P663 Sheet 673, Rev. B, "Internal-External Wiring Diagram NSPS Div. 3 Cabinet 1H13-P663"
4.4.13 E03-1P663 Sheet 604, Rev D, "Internal Wiring Diagram, NSPS Div. 1 Cabinet 1H13-P663"

4.5 Passport (D030) **INFORMATION ONLY**

4.5.1 EIN 1E22N055C & G, Differential Pressure Transmitters, General Electric (Gould/Statham), Model PD3218-100-38-12-10-56-40
4.5.2 EIN 1E22N655C & G, Analog Trip Module, General Electric, Model 147D8505G005
4.5.3 EIN PG1385, Digital Heise, Model 901B, range 0-160 inwc, 12/17/92

4.6 Calculations

4.6.1 Calculation IP-C-0089, Rev. 0, "M&TE Uncertainty Calculation".

4.7 Equipment Qualification

4.7.1 EQ-CL069, Rev. 06, Gould PD-3218 Differential Pressure Transmitter
4.7.2 SQ-CL603, Rev. 15, Qualification for MCR Panels.
4.7.3 SQ-CL689, Rev. 2, "Gould/Statham Model PD3218 Differential Pressure Transmitter and Level Transmitter"

4.8 Design Specifications/Data Sheets

4.8.1 Design Specification 22A3131, Rev. 5, "High Pressure Core Spray System".
4.8.2 Design Specification Data Sheet 22A3131AL, Rev. 13, "High Pressure Core Spray System"
4.8.3 Instrument Setpoint Log, Sheet E22-02, Rev. E
4.8.4 Performance Specification 22A7866, Revision 4, "Analog Trip Module for Nuclear System Protection System".
4.8.5 PL442X493 Rev. 18, "Card Ident List P663"

4.9 Letter GE-NE-E22-00127-1 from GE (Luke Jen, Saul Mintz, Roger Earle) to Clinton Power Station (Deborah Norton) dated April 7, 1999, Subject: Design Basis of HPCS and RCIC System Suppression Pool High Water Level Instrument Setpoint. (ATTACHMENT 5)

4.10 Engineering Evaluation for CR 1-98-09-461, "Calculation of Suppression Pool Level High Allowable Value RCIC and HPCS Suction Transfer", 4/21/99

4.11 NEDC-31336, General Electric Setpoint Methodology, October 1986

4.12 NSED Action Plan, GE-99-003, NSED File #077-99(2-17)-6, approved 2/16/99

4.13 CPS-TTI-0069, File No. B99-00(12-21)-L, December 21, 2000 "Walkdown Information", (Attachment 3)

4.14 CPS OMP8801.05D001 for Transmitter 1E22N055C & G, dated April 5, 1986. "Instrument Calibrations Data Sheet Walkdown Information" (Attachment 4)

4.15 Engineering Change Notice 27620 dated 5/14/93

4.16 CPS 9433.17, Rev. 33a, "HPCS Suppression Pool Level E22-N055C(G) Channel Calibration".

4.17 CPS 9030.01, Rev. 31, "Analog Trip Module (ATM) Functional and Calibration Check Instructions".

4.18 CPS 9030.01C032, Rev. 26, "HPCS Suppression Pool Water Level E22-N655C(G) Checklist".

## 5.0 OUTPUTS

5.1 CPS 9433.17, Rev. 33a, "HPCS Suppression Pool Level E22-N055C(G) Channel Calibration".
5.2 Deleted
5.3 CPS 9030.01, Rev. 31, "Analog Trip Module (ATM) Functional and Calibration Check Instructions".
5.4 CPS 9030.01C032, Rev. 26, "HPCS Suppression Pool Water Level E22-N655C(G) Checklist".
5.5 CPS Operational Requirements Manual (ORM), Rev. 33, Attachment 2-8, Table 5, "Emergency Core Cooling System Instrumentation Trip Setpoints", Item 3.e.
5.6 CPS Technical Specification, Amendment 140
  5.6.1 Table 3.3.5.1-1, "Emergency Core Cooling System Instrumentation", Item 3.e, Suppression Pool Water Level – High.
  5.6.2 Section 3.6.2.2, "Suppression Pool Water Level"
5.7 Instrument Setpoint Log, Sheet E22-02, Rev. E

## 6.0 REFERENCES

6.1 CI-01.00, Rev. 2, Instrument Setpoint Calculation Methodology
6.2 CPS USAR, Rev. 9
  6.2.1 CPS USAR Section 7.3.1.1.1.3.5, "Logic and Sequencing".
  6.2.2 CPS USAR Section 6.3.2.2.1, "High-Pressure Core Spray (HPCS) System".
  6.2.3 Figure 3.11-2, "Environmental Zone Map, Auxiliary, Fuel & Containment Grade Floor Plan El. 737'-0"".
  6.2.4 Figure 3.11-13, "Environmental Zone Map, Control Building, Main Floor Plan El. 800'-0"".
  6.2.5 CPS USAR Section 15.6.5.1.1, "Identification of Causes".
6.3 22A7819, Revision 0, Nuclear System Protection System Panel
6.4 General Electric EDDL/IDS, DL851E380AC Rev 22.
6.5 CPS Technical Specification, Amendment 140
  6.5.1 Table 3.3.5.1-1, "Emergency Core Cooling System Instrumentation", Item 3.e, Suppression Pool Water Level – High, (including its Bases).

6.5.2 Section 3.6.2.2, "Suppression Pool Water Level" (including its Bases)

6.5.3 SER TS Amendment 95, Old Relocated #10 is new Less Restrictive #24, Item 26

6.6 CR 1-99-03-361, Non-Conservative Allowable Values for Tech Spec Instrument Setpoint Functions, Dated 3/27/99

6.7 CPS 1512.01, Rev. 17c, "Calibration and Control of Measuring and Test Equipment".

6.8 Calculation CI-CPS-142 Rev. 3, Instrument 1E22-N655C Setpoint

6.9 Calculation CI-CPS-143 Rev. 3, Instrument 1E22-N655G Setpoint

6.10 Meyer, C. A., McClintock, R. B., Silvestri, G. J., Spencer, Jr., R. C., "Thermodynamic and Transport Properties of Steam Comprising Tables and Charts for Steam and Water", The American Society of Mechanical Engineers, New York, New York, 1967.

6.11 NEDC-31336, General Electric Instrument Setpoint Methodology, October, 1986

## 7.0 ANALYSIS AND COMPUTATION SECTION(S)

### 7.1 LOOP FUNCTION

Signals indicating high suppression pool water level are used to transfer the suction source of HPCS from the RCIC Storage Tank to the suppression pool to eliminate the possibility of HPCS continuing to provide additional water from a source outside containment. To prevent losing suction to the pump, the suction valves are interlocked so that the suppression pool suction valves must open before the RCIC Storage Tank suction valve automatically closes. This function is implicitly assumed in the accident and transient analyses (which take credit for HPCS) since the analyses assume that the HPCS suction source is the suppression pool. This instrument loop satisfies the CPS Tech Spec requirement listed in Table 3.3.5.1-1 item 3.e. (See Reference 6.5.1)

Suppression Pool Water Level-High signals are initiated from two level transmitters. The logic is arranged such that either associated ATM can cause the suppression pool suction valve to open and the RCIC Storage Tank suction valve to close. The Allowable Value for the Suppression Pool Water Level-High function is chosen to ensure that HPCS will be aligned for suction from the suppression pool before the water level reaches the point at which suppression pool design loads would be exceeded. The Allowable Value for this function is referenced from an instrument zero of 731 ft 5 inches mean sea level. (See Reference 6.5.1)

The instrument pressure transmitter is located at the 741.06' level of the Fuel Building (Input 4.4.5). The transmitter signal output is the input to the ATM circuit (1E22N655C & G) (Input 4.4.1). The ATMs are located in the Main Control Room on panel H13-P663 (Input 4.4.12).

Refer to the USAR sections listed under Reference 6.2 for additional details regarding the discussion above.

## 7.2 LOOP DIAGRAM

Inputs 4.1.1 and 4.4.1.

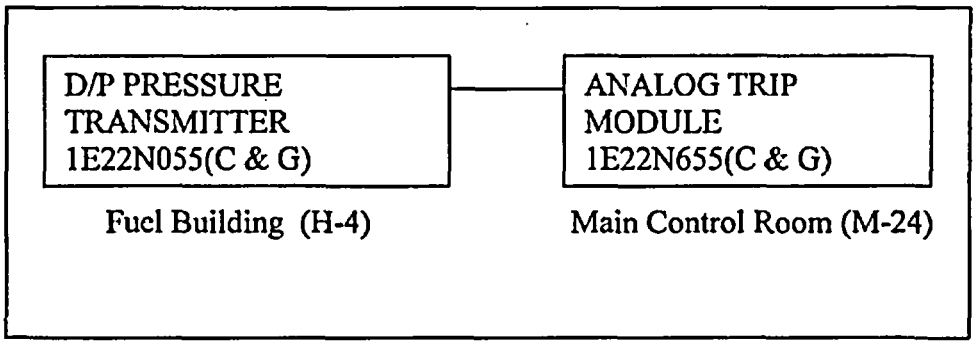


**1E22N055 (C & G)**

| | |
|---|---|
| Environmental Zone | FUEL. BLDG. H-4, F.2.1 |
| Normal Temperature | 65 to 104 °F |
| Normal Humidity | 5 to 90% RH |
| Normal Radiation | $1\times10^4$ Rads |
| Accident Temperature | Up to 147°F |
| Accident Humidity | Up to 96% |
| Accident Radiation | $1\times10^6$ Rads |
| Seismic | SQ-CL689 |

**1E22N655 (C & G)**

| | |
|---|---|
| Environmental Zone | MCR M-24 |
| Normal Temperature | 65 to 104 °F |
| Normal Humidity | 35 to 100% RH |
| Normal Radiation | $1\times10^3$ Rads |
| Accident Temperature | 65 to 104 °F |
| Accident Humidity | 35 to 100% RH |
| Accident Radiation | $1\times10^3$ Rads |
| Seismic | SQ-CL603 |

From Inputs, 4.3.1, 4.4.5, and Ref. 6.2.3, the 1E22N055(C & G) transmitters are in the Fuel Building General Area, Environmental Zone H-4, elevation 737', (Map Code F.2.1). From Inputs, 4.3.1, 4.4.10, 4.4.11, 4.4.12, 4.4.13 and Ref. 6.2.4, the 1E22N655 (C & G) ATM(s) are in the Main Control Room on H13-P663 panel (Zone Code M-24, Map Code D.6.2).

7.3 Equations

All equations in this section are taken from the table in CI-01.00 (Reference 6.1, Section 4.5.4).

7.3.1 Loop Accuracy ($A_L$):

Derived from the SSRS combination of loop components, where error attributed for each loop component is evaluated by:

$$A_1 = \pm N\sqrt{\left(\frac{VA_1}{n}\right)^2 + \left(\frac{ATE_1}{n}\right)^2 + \left(\frac{OPE_1}{n}\right)^2 + \left(\frac{SPE_1}{n}\right)^2 + \left(\frac{SE_1}{n}\right)^2 + \left(\frac{RE_1}{n}\right)^2 + \left(\frac{HE_1}{n}\right)^2 + \left(\frac{PSE_1}{n}\right)^2 + \left(\frac{REE_1}{n}\right)^2} \pm B \qquad (2\sigma)$$

$A_L$ is defined as:

$$A_L = \pm\sqrt{A_1^2 + A_2^2 + A_3^2 + \ldots} \pm B \qquad (2\sigma)$$

7.3.2 Loop Calibration Error ($C_L$):

$$C_L = \pm N\sqrt{\sum\left(\frac{ALT_1}{n}\right)^2 + \sum\left(\frac{C_1}{n}\right)^2 + \sum\left(\frac{C_1STD}{n}\right)^2} \qquad (2\sigma)$$

7.3.3 Loop Drift ($D_L$):

$$D_L = \pm N\sqrt{\left(\frac{D_1}{n}\right)^2 + \left(\frac{D_2}{n}\right)^2 + \ldots + \left(\frac{D_n}{n}\right)^2} \qquad (2\sigma)$$

7.3.4 Nominal Trip Setpoint Calculation

The Nominal Trip Setpoint (NTSP) should be calculated using the equations below depending on the direction of process variable change when approaching the Analytical Limit.

For process variables that increase to trip.

$$\mathbf{NTSP_{(INC)} = AV - AFT_L}$$

For process variables that decrease to trip.

$$\mathbf{NTSP_{(DEC)} = AV + AFT_L}$$

7.3.5 Allowable Value Calculation

The Allowable Value may be calculated for an increasing trip as follows:

**$AV_{(INC)}$ = AL - 1.645/N (SRSS of Random Terms) - Bias Terms**

This AV equation may be expressed as follows:

$$AV_{(INC)} = AL - \left(\frac{1.645}{N}\right)\sqrt{PMA^2 + PEA^2 + A_L^2} - B$$

The Allowable Value may be calculated for a decreasing trip as follows:

**$AV_{(DEC)}$ = AL + 1.645/N (SRSS of Random Terms) + Bias Terms**

This AV equation may be expressed as follows:

$$AV_{(DEC)} = AL + \left(\frac{1.645}{N}\right)\sqrt{PMA^2 + PEA^2 + A_L^2} + B$$

**Note:** An (1.645/N) adjustment is applicable to setpoints that have a limit approached in one direction (single sided interest).

7.3.6 Calculation of As-Found Values

The device As-Found Tolerance will be determined via the Square-Root-Sum-of-the-Squares (SRSS) of the device's As-Left Tolerance, its drift, and the M&TE error used to calibrate the device.

$$AFT_i = \pm(N)\sqrt{\left(\frac{ALT_i}{n}\right)^2 + \left(\frac{D_i}{n}\right)^2 + \left(\frac{C_i}{n}\right)^2} \qquad (2\sigma)$$

Where:

$ALT_i$ = device's As-Left Tolerance
$D_i$ = device's drift value
$C_i$ = errors of M&TE used to calibrate the device

The loop As-Found Tolerance (AFT) will be calculated as follows:

$$AFT_L = \pm(N)\sqrt{\left(\frac{C_L}{n}\right)^2 + \left(\frac{D_L}{n}\right)^2} \qquad (2\sigma)$$

Where:

$D_L$ = Loop devices' drift value, as defined in Section 7.3.3
$C_L$ = Loop devices' calibration effect, as defined in Section 7.3.2

However, since the transmitter and trip unit are calibrated as a string per Input 4.16 , the As Found Tolerance determined by this calculation will be applicable to the string.

7.3.7 Calculation of As-Left Values

The loop As-Left Tolerance (ALT) will be calculated as follows:

$$ALT_L = \pm(N)\sqrt{\left(\frac{ALT_1}{n}\right)^2 + \left(\frac{ALT_2}{n}\right)^2 + \ldots + \left(\frac{ALT_n}{n}\right)^2} \qquad (2\sigma)$$

Where:

$$ALT_i = \pm VA_i \qquad (2\sigma)$$

7.4 Determination of Uncertainties

7.4.1 Gould PD-3218 Differential Pressure Transmitters;

- From Input 4.15, EIN 1E22N055 (C & G) are Gould PD-3218-100-38-12-10-56-40 transmitters.
- From Input 4.2.1, Vendor Accuracy = ±0.25% of Span
- From Attachments 1, the transmitters are calibrated over a span of 125.5 to 155.5 inches of water column, or 30 inwc
- From Input 4.2.1 the Upper Range Limit (URL) for the transmitters = 100 inwc
- Per Assumption 2.1, all values are 2σ.

7.4.1.1 Vendor Accuracy of pressure transmitters ($VA_{PT}$) – Per Input 4.2.1, Vendor Accuracy is ±0.25% of calibrated Span. Therefore:

$$\mathbf{VA_{PT} = \pm\, 0.2500\%\ Span} \qquad (2\sigma)$$

7.4.1.2 Accuracy Temperature Effect ($ATE_{PT}$)

7.4.1.2.1 Normal Accuracy Temperature Effect ($ATE_{PT(Normal)}$) – Per Input 4.2.1, the ATE is given as ±1.5% URL/200 °F between 40° to 250°F at max span and ±5.0% URL/200°F between 40° to 250°F at min span. Per Input 4.3.1 and Section 7.2, the maximum Delta T equals 39 °F (104°-65°F) under normal conditions. Therefore:

$$ATE_{PT(Normal)} = \pm\,(1.5\%\ URL)*(39°/200\ °F)*(100\ inwc/30\ inwc)$$
$$ATE_{PT(Normal)} = \pm\, 0.9750\%\ Span$$

$$\mathbf{ATE_{PT(Normal)} = \pm\, 0.9750\%\ Span} \qquad (2\sigma)$$

7.4.1.2.2 Accident Accuracy Temperature Effect ($ATE_{PT(Accid)}$) – Per Assumptions 2.11 and 2.12, these instrument loops are not required to be accurate in a post LOCA environment. Therefore:

$$ATE_{PT(Accid)} = ATE_{PT(Normal)}$$

$$\mathbf{ATE_{PT(Accid)} = \pm\, 0.9750\%\ Span}$$

7.4.1.3 Humidity Effect ($HE_{PT}$) – The vendor does not provide any specification for this effect (Input 4.2.1). Therefore, per Assumption 2.3, Humidity Effects are negligible. Therefore:

$$\mathbf{HE_{PT} = 0}$$

7.4.1.4 Radiation Effect

7.4.1.4.1 Normal Radiation Effects ($RE_{PT(Normal)}$) – Per Assumption 2.4, normal Radiation Effects are not distinguishable from Drift. Therefore:

$$\mathbf{RE_{PT(Normal)} = 0}$$

7.4.1.4.2 Accident Radiation Effects ($RE_{PT(Accid)}$) - Per Reference 6.1, there is no radiation effect to the transmitters at or below 1 MRAD. Per Section 7.2, the expected accident radiation at the transmitters is 1 MRAD. Therefore:

$$\mathbf{RE_{PT(Accid)} = 0}$$

7.4.1.5 Power Supply Effects of pressure transmitters ($PSE_{PT}$) – Per Input 4.2.1, PSE is "0.01%/V power supply variation ". Per Assumption 2.6, PSS is ± 1.2 Vdc. Therefore:

$$PSE_{PT} = \pm(0.01\%\ URL/\ Vdc) * PSS * (100\ inWC/30\ inwc)$$
$$PSE_{PT} = \pm(0.01\%\ URL/Vdc) * 1.2\ Vdc * (100\ inWC/30\ inwc)$$

$$\mathbf{PSE_{PT} = \pm\ 0.0400\%\ Span} \qquad (2\sigma)$$

7.4.1.6 Static Pressure Effect ($SPE_{PT}$) – The transmitters monitor Suppression Pool level, which is effectively at ambient pressure. Therefore, there are no static pressure effects on these transmitters and:

$$\mathbf{SPE_{PT} = 0}$$

7.4.1.7 Overpressure Effect ($OPE_{PT}$) – Per Reference 6.1, Section C.3.8, the Overpressure Effect is not applicable for instruments that are not over ranged by process pressure. Input 4.2.1 shows the transmitters as having an adjustable range of 0-100 inches. Reference 6.5.2, shows that the suppression pool level is typically maintained within a 6 inch span (or a 5 inch span if LDI 99-03 is considered). This indicates that the chances of overranging the transmitters are very remote. Therefore,

$$\mathbf{OPE_{PT} = 0}$$

7.4.1.8 Seismic Effect

7.4.1.8.1 Normal Seismic Effect ($SE_{PT(Normal)}$) – Seismic activity is not considered when determining instrument uncertainty under normal conditions.

$$SE_{PT(Normal)} = 0$$

7.4.1.8.2 Accident Seismic Effect ($SE_{PT1(Accid)}$) – Per Assumption 2.11, Seismic Effect is not considered to occur concurrent with a postulated LOCA event.

$$SE_{PT(Accid)} = 0$$

7.4.1.8.3 OBE/SSE Seismic Effect ($SE_{PT1(Seismic)}$) - Per Input 4.2.1, Seismic Effect is ± 0.5% URL. Per Section 7.4.1 above, URL is 100 inwc and calibrated span is 30 inwc. Therefore:

$$SE_{PT(Seismic)} = \pm (0.5\% \text{ URL}) * (100 \text{ inwc}/ 30 \text{ inwc})$$

$$SE_{PT(Seismic)} = \pm (0.5\%) * 3.33$$

$$SE_{PT(Seismic)} = \pm 1.6667\% \text{ Span} \qquad (2\sigma)$$

7.4.1.9 RFI/EMI Effect ($REE_{PT}$) – Per Assumption 2.10, the effects of RFI/EMI are considered negligible.

$$REE_{PT} = 0$$

7.4.1.10 Bias ($B_{PT}$) – From Appendix C of Reference 6.1, Bias is defined as a systematic or fixed instrument uncertainty that is predictable for a given set of conditions because of the existence of a known direction (positive or negative). There are no identified bias effects for this transmitter.

Therefore:

$$B_{PT} = 0$$

7.4.1.11 Pressure Transmitter Accuracy - Per Section 7.3.1, device accuracy is calculated using the following equation:

$$A_i = \pm N\sqrt{\left(\frac{VA_i}{n}\right)^2 + \left(\frac{ATE_i}{n}\right)^2 + \left(\frac{OPE_i}{n}\right)^2 + \left(\frac{SPE_i}{n}\right)^2 + \left(\frac{SE_i}{n}\right)^2 + \left(\frac{RE_i}{n}\right)^2 + \left(\frac{HE_i}{n}\right)^2 + \left(\frac{PSE_i}{n}\right)^2 + \left(\frac{REE_i}{n}\right)^2} \pm B$$

7.4.1.11.1 Normal Pressure Transmitter Accuracy ($A_{PT(Normal)}$)

From above:

| | | | |
|---|---|---|---|
| $VA_{PT}$ | = ± 0.2500% Span | (2σ) | Section 7.4.1.1 |
| $ATE_{PT\ (Normal)}$ | = ± 0.9750% Span | (2σ) | Section 7.4.1.2.1 |
| $OPE_{PT}$ | = 0 | | Section 7.4.1.7 |
| $SPE_{PT}$ | = 0 | | Section 7.4.1.6 |
| $SE_{PT}$ | = 0 | | Section 7.4.1.8.1 |
| $RE_{PT}$ | = 0 | | Section 7.4.1.4 |
| $HE_{PT}$ | = 0 | | Section 7.4.1.3 |
| $PSE_{PT}$ | = ± 0.0400% Span | (2σ) | Section 7.4.1.5 |
| $REE_{PT}$ | = 0 | | Section 7.4.1.9 |
| $B_{PT}$ | = 0 | | Section 7.4.1.10 |

Substituting:

$$A_{PT(Normal)} = \pm 2\sqrt{\left(\frac{0.25\%\ Span}{2}\right)^2 + \left(\frac{0.9750\%\ Span}{2}\right)^2 + (0)^2 + (0)^2 + (0)^2 + (0)^2 + (0)^2 + \left(\frac{0.040\%\ Span}{2}\right)^2 + (0)^2 + 0}$$

$$\mathbf{A_{PT(Normal)} = \pm 1.0073\%\ span} \qquad \mathbf{(2\sigma)}$$

7.4.1.11.2 Accident Pressure Transmitter Accuracy ($A_{PT(Accid)}$)

From above:

| | | | |
|---|---|---|---|
| $VA_{PT}$ | = ± 0.2500% Span | (2σ) | Section 7.4.1.1 |
| $ATE_{PT\ (Accid)}$ | = ± 0.9750% Span | (2σ) | Section 7.4.1.2.2 |
| $OPE_{PT}$ | = 0 | | Section 7.4.1.7 |
| $SPE_{PT}$ | = 0 | | Section 7.4.1.6 |
| $SE_{PT\ (Accid)}$ | = 0 | | Section 7.4.1.8.2 |
| $RE_{PT\ (Accid)}$ | = 0 | | Section 7.4.1.4 |
| $HE_{PT}$ | = 0 | | Section 7.4.1.3 |
| $PSE_{PT}$ | = ± 0.0400% Span | (2σ) | Section 7.4.1.5 |
| $REE_{PT}$ | = 0 | | Section 7.4.1.9 |
| $B_{PT}$ | = 0 | | Section 7.4.1.10 |

Substituting:

$$A_{PT(Accid)} = \pm 2\sqrt{\left(\frac{0.25\%\ Span}{2}\right)^2 + \left(\frac{0.9750\%\ Span}{2}\right)^2 + (0)^2 + (0)^2 + (0)^2 + (0)^2 + (0)^2 + \left(\frac{0.040\%\ Span}{2}\right)^2 + (0)^2 + 0}$$

$$\mathbf{A_{PT(accid)} = \pm 1.0073\%\ span} \qquad \mathbf{(2\sigma)}$$

7.4.1.11.3 Seismic Pressure Transmitter Accuracy ($A_{PT(Seismic)}$)

From above:

| | | | |
|---|---|---|---|
| $VA_{PT}$ | = ± 0.2500% Span | (2σ) | Section 7.4.1.1 |
| $ATE_{PT\ (Normal)}$ | = ± 0.9750% Span | (2σ) | Section 7.4.1.2.1 |
| $OPE_{PT}$ | = 0 | | Section 7.4.1.7 |
| $SPE_{PT}$ | = 0 | | Section 7.4.1.6 |
| $SE_{PT\ (Seismic)}$ | = ± 1.6667% Span | (2σ) | Section 7.4.1.8.3 |
| $RE_{PT}$ | = 0 | | Section 7.4.1.4 |
| $HE_{PT}$ | = 0 | | Section 7.4.1.3 |
| $PSE_{PT}$ | = ± 0.0400% Span | (2σ) | Section 7.4.1.5 |
| $REE_{PT}$ | = 0 | | Section 7.4.1.9 |
| $B_{PT}$ | = 0 | | Section 7.4.1.10 |

Substituting:

$$A_{PT(Seismic)} = \pm 2\sqrt{\left(\frac{0.25\%\ Span}{2}\right)^2 + \left(\frac{0.9750\%\ Span}{2}\right)^2 + (0)^2 + (0)^2 + \left(\frac{1.6667\%span}{2}\right)^2 + (0)^2 + (0)^2 + \left(\frac{0.040\%\ Span}{2}\right)^2 + (0)^2 + 0}$$

$A_{PT(Seismic)}$ = **±1.9475% span** **(2σ)**

7.4.1.11.4 Pressure Transmitter Accuracy ($A_{PT}$)

Based on the above, the largest uncertainty is expected under seismic conditions. Therefore:

$A_{PT}$ = $A_{PT(Seismic)}$

$A_{PT}$ = **± 1.9475 % Span** **(2σ)**

7.4.2 Suppression Pool Level High Analog Trip Module (ATM) 1E22N655 (C & G).

- Per Input 4.4.13 & 4.8.5, EINs 1E22N655 (C & G) are GE Analog Trip Modules, Model Number 147D8505G005 (147D8505G006 alternate).
- Per Input 4.8.4, the input range for the ATM is 4-20 mA.
- Per Input 4.8.4, the vendor accuracy is ±0.25% Full Scale (Span).
- Per Section 7.2, ATM's are located in a mild environment and therefore Accident Conditions will not need to be considered.

7.4.2.1 Vendor Accuracy ($VA_{ATM}$) – Per Input 4.8.4, the vendor accuracy is ±0.25% Span. Therefore:

$$\mathbf{VA_{ATM} = \pm 0.2500\% \text{ Span}} \qquad (2\sigma)$$

7.4.2.2 Accuracy Temperature Effect ($ATE_{ATM}$) – The vendor does not provide any specification for this effect (Input 4.8.4). Therefore, per Assumption 2.2, the Accuracy Temperature Effect is considered to be included in the vendor accuracy.

$$\mathbf{ATE_{ATM} = 0}$$

7.4.2.3 Overpressure Pressure Effect ($OPE_{ATM}$) – OPE is not applicable to Analog Trip Modules.

$$\mathbf{OPE_{ATM} = 0}$$

7.4.2.4 Static Pressure Effect ($SPE_{ATM}$) – SPE is not applicable to Analog Trip Modules.

$$\mathbf{SPE_{ATM} = 0}$$

7.4.2.5 Seismic Effect ($SE_{ATM}$) – Analog Trip Modules have been seismically qualified using the manufactures published accuracy requirements (Input 4.7.2). Based on a review of Input 4.7.2, there is no additional error considerations which must be considered for seismic conditions. Therefore:

$$\mathbf{SE_{ATM} = 0}$$

7.4.2.6 Radiation Effect ($RE_{ATM}$) – The 1E22N655 (C & G) ATMs are located in a mild enviroment, and therefore, not subject to any significant radiation exposure. Therefore, the Radiation Effect is considered negligible.

$$\mathbf{RE_{ATM} = 0}$$

7.4.2.7 Humidity Efffect ($HE_{ATM}$) – The vendor does not provide any specification for this effect (Input 4.8.4). Therefore, per Assumption 2.2, the Humidity Effect is considered to be included in the Vendor Accuracy.

$$\mathbf{HE_{ATM} = 0}$$

7.4.2.8 Power Supply Effect ($PSE_{ATM}$) - The vendor does not provide any specification for this effect (Input 4.8.4). Therefore, per Assumption 2.2, the Power Supply Effect is considered to be included in the Vendor Accuracy.

$$\mathbf{PSE_{ATM} = 0}$$

7.4.2.9 RFI/EMI Effect ($REE_{ATM}$) – Per Assumption 2.10, the effects of RFI/EMI are considered negligible.

$$\mathbf{REE_{ATM} = 0}$$

7.4.2.10 Bias ($B_{ATM}$) – From Appendix C of Reference 6.1, Bias is defined as a systematic or fixed instrument uncertainty that is predictable for a given set of conditions because of the existence of a known direction (positive or negative). No such error was identified for the ATMs used for measurement of Suppression Pool Level - High. Therefore:

$$\mathbf{B_{ATM} = 0}$$

7.4.2.11 From Section 7.3.1, $A_{ATM}$ is calculated by:

$$A_i = \pm N\sqrt{\left(\frac{VA_i}{n}\right)^2 + \left(\frac{ATE_i}{n}\right)^2 + \left(\frac{OPE_i}{n}\right)^2 + \left(\frac{SPE_i}{n}\right)^2 + \left(\frac{SE_i}{n}\right)^2 + \left(\frac{RE_i}{n}\right)^2 + \left(\frac{HE_i}{n}\right)^2 + \left(\frac{PSE_i}{n}\right)^2 + \left(\frac{REE_i}{n}\right)^2} \pm B$$

From above:

| | | | |
|---|---|---|---|
| $VA_{ATM}$ | = ± 0.2500% Span | (2σ) | Section 7.4.2.1 |
| $ATE_{ATM}$ | = 0 | | Section 7.4.2.2 |
| $OPE_{ATM}$ | = 0 | | Section 7.4.2.3 |
| $SPE_{ATM}$ | = 0 | | Section 7.4.2.4 |
| $SE_{ATM}$ | = 0 | | Section 7.4.2.5 |
| $RE_{ATM}$ | = 0 | | Section 7.4.2.6 |
| $HE_{ATM}$ | = 0 | | Section 7.4.2.7 |
| $PSE_{ATM}$ | = 0 | | Section 7.4.2.8 |
| $REE_{ATM}$ | = 0 | | Section 7.4.2.9 |
| $B_{ATM}$ | = 0 | | Section 7.4.2.10 |

Substituting:

$$A_{ATM} = \pm 2\sqrt{\left(\frac{0.25\%\ \text{Span}}{2}\right)^2 + (0)^2 + (0)^2 + (0)^2 + (0)^2 + (0)^2 + (0)^2 + (0)^2 + (0)^2 + 0}$$

$$\mathbf{A_{ATM} = \pm\, 0.2500\%\ span} \qquad \mathbf{(2\sigma)}$$

7.4.3 Loop Accuracy ($A_L$)

From Section 7.3.1:

$$A_L = \pm\sqrt{A_1^2 + A_2^2 + A_3^2 + \ldots} \pm B$$

From above:

| | | | |
|---|---|---|---|
| $A_{PT}$ | = ± 1.9475% Span | (2σ) | Section 7.4.1.11.4 |
| $A_{ATM}$ | = ± 0.2500% Span | (2σ) | Section 7.4.2.11 |

Substituting:

$$A_L = \pm\sqrt{A_{PT}^2 + A_{ATM}^2} \pm B_{PT} \pm B_{ATM}$$

$$A_L = \pm\sqrt{1.9475\ \%span^2 + 0.2500\ \%span^2} \pm 0 \pm 0$$

**$A_L$ = ±1.9635% span** **(2σ)**

7.5 Loop Calibration Error ($C_L$)

Loop Calibration Error is determined by the SRSSs of As-Left Tolerance ($ALT_i$), Calibration Tool Error ($C_i$), and Calibration Standards Error ($C_{i\,STD}$) for the individual devices in the loop. The equation below is used to calculate this effect.

From Section 7.3.2:

$$C_L = \pm N\sqrt{\sum\left(\frac{ALT_i}{n}\right)^2 + \sum\left(\frac{C_i}{n}\right)^2 + \sum\left(\frac{C_i STD}{n}\right)^2}$$

7.5.1 As-Left Tolerance ($ALT_L$)

From Section 7.3.7

$$ALT_L = \pm(N)\sqrt{\left(\frac{ALT_1}{n}\right)^2 + \left(\frac{ALT_2}{n}\right)^2 + \left(\frac{ALT_3}{n}\right)^2 + \ldots}$$

Where:

$ALT_i = \pm VA_i$ **(2σ)**

Determining the ALT for the transmitter ($ALT_{PT}$),

$ALT_{PT} = \pm VA_{PT}$

**$ALT_{PT} = \pm$ 0.2500% span** **(2σ)**

Transmitter As Found / As Left limits are stated in Vdc per Input 4.1. Converting to Vdc at a precision of 0.001 Vdc

$$ALT_{PT} = \pm 0.2500\,\%span * ((5-1)Vdc)span$$

**$ALT_{PT} = \pm$ 0.010 Vdc** **(2σ)**

Determining the ALT for the Analog Trip Unit ($ALT_{ATM}$),

$ALT_{ATM} = \pm VA_{ATM}$
**$ALT_{ATM} = \pm$ 0.2500% span** **(2σ)**

ATM As Found / As Left limits are stated in IN WATER per Input 4.16 at a precision of 0.01 IN WATER.

Converting to IN WATER

$$ALT_{ATM} = \pm 0.2500\,\%span * (+15-(-15)IN\_WATER)span$$
$$= \pm 0.0750\,IN\_WATER$$

Per Input 4.16 the ALT is 0.30 inwc nonsymmetrical or 0.15 inwc. Using the larger of the two values;

**$ALT_{ATM} = \pm$ 0.15 IN WATER** **(2σ)**

Converting to % span

$$ALT_{ATM} = \pm[0.15IN\_WATER\ /(+15-(-15)IN\_WATER)span] * 100\%span$$
$$= \pm 0.5\%span$$

Therefore

**$ALT_{ATM} = \pm$ 0.5% span** **(2σ)**

Determining the ALT for the loop ($ALT_L$),

$$ALT_L = \pm(N)\sqrt{\left(\frac{ALT_{PT}}{n}\right)^2 + \left(\frac{ALT_{ATM}}{n}\right)^2}$$

$$ALT_L = \pm(2)\sqrt{\left(\frac{0.2500\%Span}{2}\right)^2 + \left(\frac{0.5\%Span}{2}\right)^2}$$

$ALT_L = \pm$ 0.5590% Span (2σ)

Loop As Found / As Left limits are stated in IN WATER per Input 4.16 at a precision of 0.01 IN WATER.

Converting to IN WATER

$$ALT_L = \pm 0.5590\%span * (+15 - (-15)IN\_WATER)span$$
$$= \pm 0.16 IN\_WATER\ (rounded\ down)$$

Per Input 4.16 the ALT is 0.29 inwc nonsymmetrical or 0.145 inwc. Using the larger of the two values;

**$ALT_L = \pm$ 0.16 IN WATER** **(2σ)**

Converting to % span

$$ALT_L = \pm[0.16 IN\_WATER / (+15 - (-15)IN\_WATER)span] * 100\%span$$
$$= \pm 0.5333\%span$$

Therefore

**$ALT_L = \pm$ 0.5333% span** **(2σ)**

7.5.2 Calibration Tool Error ($C_i$)

7.5.2.1 Transmitter Calibration Tool Error ($C_{PT}$)

The loop is calibrated with a DC voltmeter that is capable of measuring 1-5 Vdc (currently specified as a Fluke 45) and a test gauge range of 0-200 inwc. A 250 ohm precision resistor is required, accurate to ±0.02 ohms. This information is from Section 7.0 of Input 4.16. A review of Calculation IP-C-0089 (Input 4.6.1) did not identify a test gauge with a 200 inwc range.

Per review of completed surveillance, the test gauge used for the calibration is a Heise 901B digital indicator with a range of 0-160 inwc

(Input 4.5.3). This gauge is not specifically listed in the M&TE specifications of Input 4.6.1; therefore, the accuracy for this gauge will be derived in this calculation.

The M&TE error for the voltmeter ($C_{VM}$) is therefore:

$C_{VM}$ = 0.097% Span (for 1-5 volt span) (3 σ)

$C_{VM}$ = ± 0.004 Vdc (max temp band of 22°C) (Input 4.6.1)

The M&TE error for the precision resistor ($C_{PR}$) is therefore:

$C_{PR}$ = 0.02/250 *100
$C_{PR}$ = 0.008% Span (3 σ)

The M&TE error for the Heise 901B digital indicator ($C_{PG}$) is therefore:

The errors for this gauge are derived from Attachment 11, Page 27 of Input 4.6.1 as follows:

Accuracy = ± 0.035% full scale
Sensitivity = ± 0.005% full scale
Repeatability = ± 0.005% full scale (included in Accuracy)
Maximum Temperature Effects:
Zero - ±0.004% of span per °F
Span - ±0.004% reading based on a reference temperature of 70°F.

The VA of the digital indicator is determined by SRSS combination of the two applicable error terms noted above.

$VA = \pm (0.035^2 + 0.005^2)^{1/2}$
VA = ± 0.0354 % full scale

Per Input 4.5.3 and Attachment 11, Page 28 of Input 4.6.1, the 901B digital indicator is temperature-compensated over the temperature range of 20°F to 120°F. Using the temperature effects listed above, ATE is calculated as:

$ATE = ((0.004*(120°F - 70°F))^2 + 0.004^2)^{1/2}$

ATE = 0.204% full scale

Also per Input 4.5.3, the 901B indicator is calibrated to within ± 0.07 inwc over a 0-160 inwc range.

ALT = ± 0.07 inwc * (100% full scale/160 inwc)
ALT = ± 0.0438% full scale

Per Input 4.6.1, Paragraph 3.5, the digital indicator IRE is conservatively taken as the least significant digit of the digital display and is considered insignificant.

IRE = 0

$C_{PG} = \pm [VA^2 + ATE^2 + IRE^2 + ALT^2]^{1/2}$

Where, from above:
VA = ± 0.0354% Span
ATE = ± 0.0204% Span
IRE = 0
ALT = ± 0.0438% Span

Substituting:
$C_{PG} = \pm [0.0354^2 + 0.0204^2 + 0 + 0.0438^2]^{1/2}$
= ± 0.212% FS

Converting to the 30 inwc span of the transmitter:
$C_{PG}$ = ± 0.212 (160 inwc/30 inwc)
$C_{PG}$ = ± 1.1307% Span (3σ)

**$C_{PG}$ = ± 1.1307% Span** (3σ)

Converting to inwc:

$C_{PG}$ = ± 1.1307% Span * 30 inwc

**$C_{PG}$ = ± 0.3392 inwc** (3σ)

Substituting terms:

$$C_{PT} = \pm\sqrt{C_{PG}^2 + C_{VM}^2 + C_{PR}^2}$$

$$C_{PT} = \pm\sqrt{1.1307\ \%\ span^2 + 0.097\ \%\ span^2 + 0.008\ \%\ span^2}$$

**$C_{PT}$ = ± 1.1348% Span** (3 σ)

7.5.2.2 ATM Calibration Tool Error ($C_{ATM}$)

The ATM's are calibrated using a DAC. The DAC accuracy has been evaluated in Input 4.6.1. Per Input 4.6.1, the DAC accuracy for the ATM is ± 0.151% span. Therefore:

$$\mathbf{C_{ATM} = \pm 0.151\% \text{ span} \qquad (3\sigma)}$$

7.5.3 Calibration Standard Error ($C_{STD}$):

Per Assumption 2.9, Calibration Standard Error is considered negligible for the purposes of this analysis.

$$\mathbf{C_{STD} = 0}$$

7.5.4 Loop Calibration Error ($C_L$):

Per Section 8.4 of Input 4.16, the loop calibration for 1E22N055C&G and 1E22N655C&G is performed using a pressure gauge only. Therefore, from Section 7.5.2.1, $C_i$ for the loop will be $C_{PG}$.

$$C_L = \pm N\sqrt{\sum\left(\frac{ALT_i}{n}\right)^2 + \sum\left(\frac{C_i}{n}\right)^2 + \sum\left(\frac{C_iSTD}{n}\right)^2}$$

Where:

$ALT_i$ = As-Left Tolerance for Loop or $ALT_L$
$C_{PG}$ = Calibration Error
$C_iSTD$ = Calibration Standard Error

From above:

| | | | |
|---|---|---|---|
| $ALT_L$ | = 0.5333%span | (2σ) | Section 7.5.1 |
| $C_{PG}$ | = 1.1307%span | (3σ) | Section 7.5.2 |
| $C_iSTD$ | = 0 | | Section 7.5.3 |

Substituting terms:

$$C_L = \pm 2\sqrt{\left(\frac{0.5333\ \%\ span}{2}\right)^2 + \left(\frac{1.1307\ \%\ span}{3}\right)^2 + 0^2}$$

$$\mathbf{C_L = \pm 0.9234\% \text{ span} \quad (2\sigma)}$$

## 7.6 Loop Drift

### 7.6.1 Pressure Transmitter Drift ($D_{PT}$):

Per Input 4.2.1, Drift is ±0.25% URL for 6 months, and per Reference 6.1 it is considered a 2σ value. Drift will be determined based on a nominal 30-month calibration interval (Assumption 2.7), in accordance with Technical Specifications allowance for the surveillance for up to 1.25% of the required interval, or 30 months (24*1.25=30). Section 7.4.1 shows the calibrated span as 30 inwc and the URL as 100 inwc. Therefore per Reference 6.1:

$$D_{PT} = (30\text{ mo}/6\text{ mo})^{1/2}\ (\pm\ 0.25\%\ \text{URL})\ (100\text{ inwc}/30\text{ inwc})$$

$$\mathbf{D_{PT} = \pm 1.8634\%\ Span} \qquad (2\sigma)$$

### 7.6.2 Analog Trip Module Drift ($D_{ATM}$):

Per Input 4.8.4, Drift is ±0.25% of Span for a period of 30 days. Per the calibration procedure (Input 4.17), the calibration frequency is 92 days. Technical Specifications allow for the surveillance to be delayed for up to 1.25% of the required interval, or 115 days (92*1.25=115). Therefore, per Ref. 6.1:

$$D_{ATM} = \pm 0.25\% * (115\text{ days}/30\text{ days})^{1/2}$$

$$\mathbf{D_{ATM} = \pm 0.4895\%\ Span} \qquad (2\sigma)$$

### 7.6.3 Loop Drift ($D_L$):

From Section 7.3.3, Loop Drift is calculated:

$$D_L = \pm N \sqrt{\left(\frac{D_1}{n}\right)^2 + \left(\frac{D_2}{n}\right)^2 + \ldots + \left(\frac{D_n}{n}\right)^2}$$

$$D_L = \pm 2 \sqrt{\left(\frac{1.8634\ \%\ span}{2}\right)^2 + \left(\frac{0.4895\ \%\ span}{2}\right)^2}$$

$$\mathbf{D_L = \pm 1.9266\%\ Span} \qquad (2\sigma)$$

7.7 Process Measurement Accuracy (PMA):

The Suppression Pool Level is sensed by instrument lines connected via a remote diaphragm and capillary tubing to the Suppression Pool. Because of the process being measured, the PMA effects are associated with the change in temperature and thus density of the suppression pool water. Per Reference 6.2.3, the maximum normal temperature of the suppression pool is conservatively 120°F. The transmitter scaling is based upon the physical span of 30 inches and specific gravity of 1.0000 (68°F). Suppression Pool temperatures lower than 68°F would result in an aiding bias and therefore will not be calculated. Therefore, for normal conditions the PMA will be calculated as the difference in the water density between the calibration temperature of 68°F and 120°F and treated as negative bias which is a concern for an increasing trip setpoint. As determined below, negative error will result where the process temperature increases.

Per Reference 6.10 the specific volumes of water at atmospheric pressure are as follows:

$V_{f(@\,68F)} = 0.01604537\ ft^3/lbm$

$V_{f(@\,120F)} = 0.01620363\ ft^3/lbm$

$Density = 1/V_{f(@\,X°F)}$

$SG_{(@\,X°F)} = Density_{(@\,68°F)} / Density_{(@\,X°F)}$

Therefore: $SG_{(@\,X°F)} = V_{f(@\,68°F)} / V_{f(@\,X°F)}$

$SG_{(@\,68F)} = (0.01604537)/(0.01604537) = 1.0$

$SG_{(@\,120F)} = (0.01620363)/(0.01604537) = 0.9902331$

$PMA = [(SG_{(@\,120F)} - SG_{(@\,68F)}) / SG_{(@\,68F)}] * 100\%\ span$
$= [0.9902331 - 1.0000000) / 1.0000000] * 100\%\ span$
$= -0.9767\%\ span$

**PMA = - 0.9767% span** **(2σ)**

7.8 Primary Element Accuracy (PEA):

Per Section 1 of Input 4.2.1, the Gould Model PD3218 transmitters operate with a remote diaphragm and capillary tubing. Pressure applied to the remote diaphragm is hydraulically transmitted through the capillary fill fluid to the differential pressure sensor. Section 3 of Input 4.2.1 provides the temperature effect on the capillary system, per 50°F as:

$E = 0.03L + 0.2$

Where:

E = temperature effect, inwc

L = capillary length, feet

Per Input 4.14 the distance between the upper and lower diaphragms is 17.42' (212.5)". Temperature effects are cancelled in the capillary tubing above the Low Pressure remote sensor elevation (737'- 5").

$E = (0.03)(17.42) + 0.2 = 0.7226$ inwc effect per 50°F

Per Input 4.3.1 and Section 7.2, the normal temperature variation to the transmitters and to the capillaries is 39°F (104°F - 65°F). Also, per Section 7.4.1 the calibrated span of the transmitters is 30 inwc.

The capillary temperature effect, or PEA is as follows and is considered as a random term since the temperature may rise and fall causing the capillary fill fluid to become both more and less dense,

PEA = ±(0.7226 inwc/50°F) * 39°F

PEA = ±0.5636 inwc

Converting to % span:

PEA = ±(0.5636 inwc/30 inwc) * 100%

**PEA = ±1.8788% span** **(2σ)**

## 8.0 RESULTS

### 8.1 Calculation of the Allowable Value (AV)

From Input 4.9, the Analytical Limit (AL) is 1 foot above instrument nominal trip setpoint, pool high level (increasing).

The Allowable Value may be calculated for an increasing trip as follows:

**AV = AL - 1.645/N (SRSS of Random Terms) - Bias Terms**

This AV equation may be expressed as follows by utilizing the random terms defined in Section 4.5.2.1 of Ref. 6.1:

$$AV = AL - \left(\frac{1.645}{N}\right)\sqrt{PMA^2 + PEA^2 + A_L^2} \pm B$$

Note that the random and bias terms are defined in Section 4.5.2 of Ref. 6.1. The calculation of the AV does not include the $C_L$ and $D_L$ terms.

Where:

| | | | |
|---|---|---|---|
| $AL_{Lower}$ | = 12 inwc | | Section 8.2 |
| Calibrated Span | = 30 inwc | | Section 7.4.1 |
| PMA | = ± 0% Span | (2σ) | Section 7.7.2 |
| | = ± 0% Span * 30 inwc | | |
| | = ± 0.0 inwc | | |
| PEA | = ± 1.8788 % Span | (2σ) | Section 7.8.2 |
| | = ± 1.8788% Span * 30 inwc | | |
| | = ± 0.5636 inwc | | |
| $A_L$ | = ± 1.9635% Span | (2σ) | Section 7.4.3 |
| | = ± 1.9635% Span * 30 inwc | | |
| | = ± 0.5891 inwc | | |
| B | = –0.9767% Span | | Section 7.7 |
| | = –0.9767% Span * 30 inwc | | |
| | = –0.2930 inwc | | |
| N | = 2 | | Section 7.3 |

Substituting:

$$AV = AL - \left(\frac{1.645}{N}\right)\sqrt{PMA^2 + PEA^2 + A_L^2} \pm B$$

$$AV = 12\,inwc - \left(\frac{1.645}{2}\right)\sqrt{0^2 + 0.5636\,inwc^2 + 0.5891\,inwc^2} - 0.2930\,inwc$$

**AV ≤ 11.0364 inwc above pool high level**

CPS Technical Specification (Reference 6.5.1) Table 3.3.5.1-1 (Item 3.e), lists the Allowable Value as ≤ 12 inches, which is referenced from an instrument zero corresponding to 731'-5" (per the Bases of these Tech Specs). Per Input 4.10, the Analytical Limit of 1 foot above pool high level (731'-5") corresponds to 732'-5". The existing Allowable Value of ≤ 12 inches from instrument zero of 731'-5" is 732'-5" and corresponds to the 732'-5" (or 1 foot above pool high level) recently provided by GE as the Analytical Limit. Therefore the existing Allowable Value is non-conservative. Using the ≤ 11.0 inches above pool high level (731'-5") corresponds to ≤ 732'-4 inches for the newly calculated Allowable Value. LDI 99-02 lowered the value in the Tech Spec from ≤ 12 inches to ≤ 8.5, however, AV will be changed with the results of this calculation to ≤ 11.0 inches.

**AV≤ 11.0 inches (referenced from 731'-5")** **(2 σ)**

8.2 Calculation of the Trip setpoint:

From Input 4.9, the Analytical Limit (AL) is 1 foot above instrument nominal trip setpoint, pool high level (increasing).

The Nominal Trip Setpoint (NTSP) is calculated using the equation below for process variables that increase to trip.

**NTSP = AV - $AFT_L$**

Where:

| | | |
|---|---|---|
| AV | = 11.0 inwc | Section 8.2 |
| $AFT_L$ | = 0.64 inwc | Section 8.3.3 |

Therefore, the trip setpoint (NTSP) is:

NTSP = AV - $AFT_L$

NTSP = 11.0 inwc – 0.64 inwc

NTSP = 10.36 inwc

**NTSP = 10.36 inwc (above the pool high level of 731'-5")**

The current setpoint in the CPS Operational Requirements Manual (Output 5.5) Table 5 (Item 3.e), is ≤ 6.5 inches. Per Input 4.16, the maximum value is 6.5 inches. Per Input 4.10, the Analytical Limit of 1 foot above pool high level (731'-5") corresponds to 732'-5". Both the Analytical Limit and the existing setpoint are referenced from the same point, 731'-5". Thus, the ORM value is conservative to the calculated value of 10.36 inches, therefore the ORM value of 6.5 inches trip setpoint will be retained and delete the "≤" sign.

**NTSP = 6.5 inwc (referenced from 731'-5")** **(2 σ)**

8.3 Calculation of As-Found Values

From Section 7.3.6, both Instrument loop and device As-Found Tolerances should be calculated. The device As-Found Tolerance will be determined via the Square-Root-Sum-of-the-Squares (SRSS) of the device's As-Left Tolerance, its drift, and the M&TE error used to calibrate the device. From Ref. 6.1:

$$AFT_i = 2\sqrt{\left(\frac{ALT_i}{n}\right)^2 + \left(\frac{C_i}{n}\right)^2 + \left(\frac{VD_i}{n}\right)^2}$$

Where:

$ALT_i$ = device's As-Left Tolerance
$VD_i$ = device's drift value (D)
$C_i$ = M&TE errors used to calibrate the device

8.3.1 Calculating As-Found Tolerance ($AFT_{PT}$) for transmitters 1E22-N055C(G):

From above:

| | | | |
|---|---|---|---|
| Calibrated Span | = 30 inwc | | Section 7.4.1 |
| $ALT_{PT}$ | = ± 0.2500% Span | (2σ) | Section 7.5.1 |
| $D_{PT}$ | = ± 1.8634% span | (2σ) | Section 7.6.1 |
| $C_{PT}$ | = ± 1.1348% span | (3σ) | Section 7.5.2 |

Substituting:

$$AFT_{PT} = \pm 2\sqrt{\left(\frac{ALT_{PTi}}{n}\right)^2 + \left(\frac{C_{PTi}}{n}\right)^2 + \left(\frac{VD_{PTi}}{n}\right)^2}$$

$$AFT_{PT} = \pm 2\sqrt{\left(\frac{0.2500\ \%span}{2}\right)^2 + \left(\frac{1.8634\ \%span}{2}\right)^2 + \left(\frac{1.1348\ \%span}{3}\right)^2}$$

$$AFT_{PT} = \pm 2.0266\ \%span$$

Transmitter As Found / As Left limits are stated in Vdc per Input 4.16. Converting to Vdc at a precision of 0.001 Vdc

$$AFT_{PT} = \pm 2.0266\%span * ((5-1)Vdc)span$$
$$= \pm 0.0811 Vdc$$

Rounding (conservatively) to the precision of Input 4.16.

**$AFT_{PT}$ = ± 0.081 Vdc** **(2σ)**

8.3.2 Calculating As-Found Tolerance ($AFT_{ATM}$) for ATMs 1E22-N655(C&G)

From above:

| | | | |
|---|---|---|---|
| Calibrated Span | = 30 inwc | | Section 7.4.2 |
| $ALT_{ATM}$ | = ± 0.5% span | (2σ) | Section 7.5.1 |
| $D_{ATM}$ | = ± 0.4895% span | (2σ) | Section 7.6.2 |
| $C_{ATM}$ | = ± 0.151% span | (3σ) | Section 7.5.4 |

Substituting:

$$AFT_{ATM} = \pm 2\sqrt{\left(\frac{ALT_{ATM}}{n}\right)^2 + \left(\frac{C_{ATM}}{n}\right)^2 + \left(\frac{D_{ATM}}{n}\right)^2}$$

$$AFT_{ATM} = \pm 2\sqrt{\left(\frac{0.5\%span}{2}\right)^2 + \left(\frac{0.4895\%span}{2}\right)^2 + \left(\frac{0.151\%span}{3}\right)^2}$$

$$AFT_{ATM} = \pm 0.7069\%span$$

ATM As Found / As Left limits are stated in IN WATER per Input 4.16 at a precision of 0.01 IN WATER.

Converting to IN WATER

$$AFT_{ATM} = \pm 0.7069\%span * (+15 - (-15) IN\_WATER)span$$
$$= \pm 0.2121 IN\_WATER$$

Rounding (conservatively) to match the precision of Input 4.16

**$AFT_{ATM}$ = ± 0.21 IN WATER** **(2σ)**

8.3.3 Loop As-Found Tolerance ($AFT_L$) - From Section 7.3.8, the loop As-Found Tolerance (AFT) will be calculated as follows:

$$AFT_L = \pm (N)\sqrt{\left(\frac{C_L}{n}\right)^2 + \left(\frac{D_L}{n}\right)^2}$$

From above:

| | | | |
|---|---|---|---|
| Calibrated Span | = 30 inwc | | Section 7.4.1 |
| $C_L$ | = ± 0.9234% Span | (2σ) | Section 7.5.4 |
| $D_L$ | = ± 1.9266% Span | (2σ) | Section 7.6.3 |

Substituting:

$$AFT_L = \pm(N)\sqrt{\left(\frac{C_L}{n}\right)^2 + \left(\frac{D_L}{n}\right)^2}$$

$$AFT_L = \pm(2)\sqrt{\left(\frac{0.9234\%span}{2}\right)^2 + \left(\frac{1.9266\%span}{2}\right)^2}$$

$$AFT_L = \pm 2.1365\%span$$

Loop As Found / As Left limits are stated in IN WATER per Input 4.16 at a precision of 0.01 IN WATER.

Converting to IN WATER

$$AFT_L = \pm 2.1365\% span * (+15 - (-15) IN\_WATER) span$$
$$= \pm 0.6409\, IN\_WATER$$

**$AFT_L$ = ± 0.64 IN WATER** **(2σ)**

8.4 Calculation of Reset Value

The trip reset value is selected to prevent overlap with the acceptable NTSP tolerance band, and also to prevent interference with normal plant operations. The maximum reset value is calculated as follows for the increasing trip function:

**Reset ≤ NTSP - $AFT_L$**

Reset ≤ (6.5 inwc) – 0.64 inwc
Reset ≤ 5.86 inwc

From Input 4.16, the existing reset is 5.6 inwc which is 0.9 inwc below the existing field setting (6.5 inwc). This is a difference of +3% span, which equals the standard differential used for ATMs at CPS. The 0.9 inwc existing differential is greater and therefore more conservative (moves process further away from AL) than the 0.64 inwc minimum reset differential derived from $AFT_L$. Adding the 3% differential to the NTSP determines the reset value:

Reset = 6.5 inwc - 3% * 30 inwc span
= 6.5 inwc – 0.9 inwc

**Reset = 5.6 inches**

## 9.0 CONCLUSIONS

This calculation determined a NTSP of 10.36 inches for the Suppression Pool Level High swapover for HPCS pump suction. Thus, both the existing trip setpoint of 6.4 inches and the ORM value are conservative to the calculated value of 10.36 inches, therefore the ORM value of 6.5 inches trip setpoint will be retained and delete the "≤" sign.

**NTSP = 6.5 inches**

The existing Allowable Value of ≤ 12 inches is not conservative to the calculated AV of ≤ 11.0 inches, the technical specification, setpoint log, and design specification will be revised to the calculated AV.

**AV ≤ 11.0 inches**

The scaling for the Suppression Pool Level High-HPCS swapover is addressed in Attachment 1 to this calculation. This calculation provides AFT values for device and loop calibration. The CPS procedures need to be revised to accommodate these calculated AFT values. A "Results Summary" is included in Attachment 2 to this calculation to provide as summary.

FIGURE 1 – SUPPRESSION POOL HIGH LEVEL – HPCS SUCTION SWAPOVER

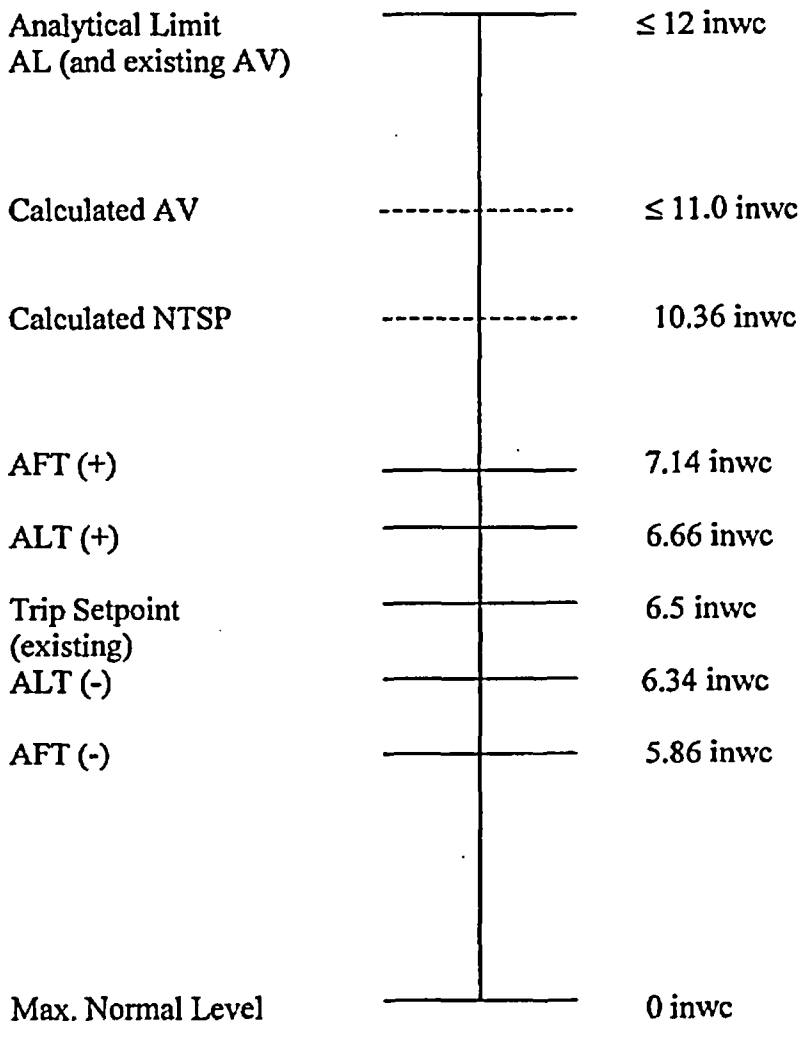

## HEAD CORRECTIONS

Suppression Pool Level Transmitters 1E22N055C&G are located above the Suppression Pool. This arrangement is functional due to remote sensors with sealed capillaries connecting differential pressure measuring cell to the remote pressure sensors located above (LP) and below (HP) the process. The transmitter zero is elevated to compensate for the negative differential pressure (due to differing elevations of the remote pressure sensors) when the Suppression Pool level is 125.5 inches above the HP sensor datum. With the sealed capillary configuration, transmitter scaling is straightforward; the process is simply varied (simulated) between the zero and full span points with the transmitter being set accordingly. Because process temperature effect on density is treated as an uncertainty, no compensation for process temperature density is necessary. The transmitter is scaled for standard process temperature and pressure (STP) 14.7 psia & 68°F. The figure below shows the relative elevations of the transmitter, remote sensors, and suppression pool levels. All elevations are relative to the process variable leg instrument tap of 719'-8.5". Remote sensor elevation datum is from Inputs 4.13 & 4.14. The Suppression Pool transmitter is scaled from −15 to +15 inches about a zero elevation of 731'-5" mean seal level (Reference 6.5.1 Bases).

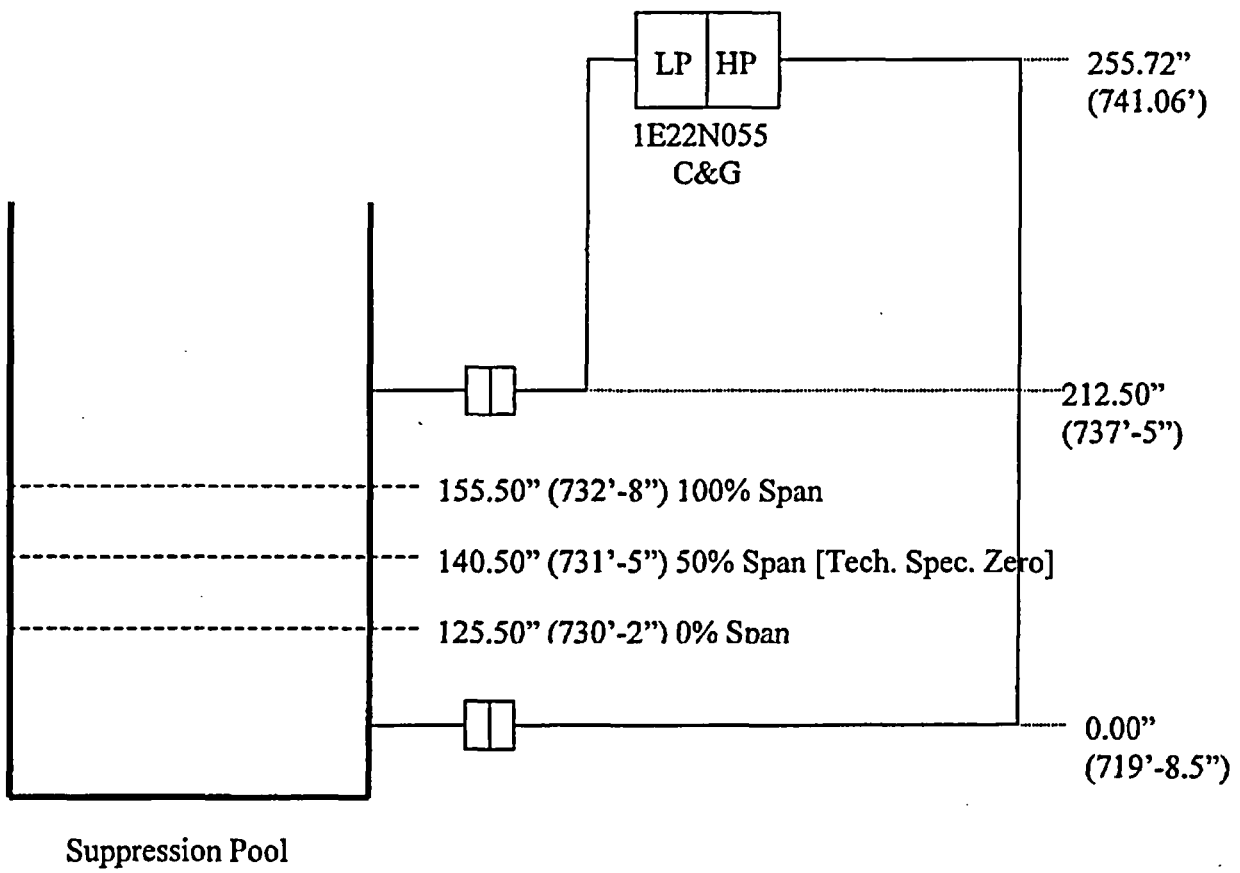

## SCALING OF THE SUPPRESSION POOL LEVEL –HIGH (HPCS) SWAPOVER INSTRUMENT LOOP

1 **Transmitters**

1E22N055C & G

Manufacturer: Gould
Model No.: PD3218
Input: 125.50 to 155.50 inwc
Output: 1.000 – 5.000 Vdc

Process Range

| Min (p) | Max (P) | Units |
|---|---|---|
| p=125.50 | P=155.50 | inwc |

Transmitter Output Range

| Min(o) | Max(O) | Units |
|---|---|---|
| o=1.000 | O=5.000 | Vdc |

As shown above, there are no head corrections necessary to apply to the transmitters. Transmitter zero is elevated to 125.50". Any head effect due to changes in temperature of the pool water have been incorporated into the instrument uncertainty as PMA as discussed in Section 7.7 above. The transmitters are aligned to reflect from –15 inches to +15 inches of water with the instrument zero referenced to the pool high level elevation of 731'-5". The information above shows that the minimum level of 125.50" corresponds from the centerline of the bottom tap of the suppression pool (elevation 719'-8.5") to 15 inches below (i.e., -15 inches) the pool high elevation of 731'-5", which is 730'-2". Similarly, the maximum level of 155.50" corresponds from the bottom of the suppression pool (elevation 719'-8.5") to 15 inches (i.e., +15 inches) above the pool high elevation of 731'-5", which is 732'-8". The association between the pool levels, elevations, and equivalent output voltage is shown below:

| Pool level | Input | Output |
|---|---|---|
| -15.00" | 125.50 inwc | 1.000 Vdc |
| -7.50" | 133.00 inwc | 2.000 Vdc |
| 0.00" | 140.50 inwc | 3.000 Vdc |
| +7.50" | 148.00 inwc | 4.000 Vdc |
| +15.00" | 155.50 inwc | 5.000 Vdc |

2 **Analog Trip Modules (ATM)**

1E22N655C & G

Manufacturer: General Electric
Model: 14708505G005

Input: 1.000 - 5.000 Vdc
Output: discrete trip signal

3 Suppression Pool Level – Loop High (HPCS) Swapover Setpoint

Where trip is established at 6.5 inches (inc):
Inwc = [6.5 – (-15)] inwc/30 inwc x 30 inwc + 125.5 inwc = 147.00 inwc

Where Allowable Value is established at 11.0 inches:
Inwc = [11.0 – (-15)] inwc/30 inwc x 30 inwc + 125.5 inwc = 151.5 inwc

Where Resct is established at 5.6 inches:
Inwc = [5.6 – (-15)] inwc/30 inwc x 30 inwc + 125.5 inwc = 146.10 inwc

**1E22N055C & G**

| Cal. Pt. | Input | Input | Output (volts DC) | |
|---|---|---|---|---|
| | inches | Inwc | AFT | ALT |
| | | | (±0.081 Vdc) | (±0.010 Vdc) |
| 0% | -15 | 125.50 | 1.000 (0.919 to 1.081) | 1.000 (0.990 to 1.010) |
| 25% | -7.5 | 133.00 | 2.000 (1.919 to 2.081) | 2.000 (1.990 to 2.010) |
| 50% | 0 | 140.50 | 3.000 (2.919 to 3.081) | 3.000 (2.990 to 3.010) |
| 75% | +7.5 | 148.00 | 4.000 (3.919 to 4.081) | 4.000 (3.990 to 4.010) |
| 100% | +15 | 155.50 | 5.000 (4.919 to 5.081) | 5.000 (4.990 to 5.010) |

**1E22N655C & G**

| Cal. Pt. | Input | Output (inwc) | |
|---|---|---|---|
| | **inches** | AFT | ALT |
| | | (±0.21 inwc) | (±0.15 inwc) |
| Allow. Value | ≤ 11.0 | ≤ 11.0 | ≤ 11.0 |
| Setpoint | 6.50 | 6.50 (6.29 to 6.71) | 6.50 (6.35 to 6.65) |
| Reset | 5.60 | 5.60 (5.39 to 5.81) | 5.60 (5.45 to 5.75) |

**Loop Calibration for 1E22N055/1E22N655 (C & G)**

| Cal. Pt. | Input | Output (inwc) | |
|---|---|---|---|
| | **inches** | AFT | ALT |
| | | (±0.64 inwc) | (±0.16 inwc) |
| Allow. Value | ≤ 151.5 | ≤ 151.5 | ≤ 151.5 |
| Setpoint | 147.00 | 147.00 (146.36 to 147.64) | 147.00 (146.84 to 147.16) |
| Reset | 146.10 | 146.10 (145.46 to 146.74) | 146.10 (145.94 to 146.26) |

## RESULTS SUMMARY

The following tables list the applicable results of this calculation:

| Primary Sensor Scaling/Calibration | | | | | |
|---|---|---|---|---|---|
| Primary Sensor | Calibration Span | | | | |
| | 0% | 25% | 50% | 75% | 100% |
| 1E22-N055C (G) | 125.5 inwc | 133.0 inwc | 140.5 inwc | 148.0 inwc | 155.5 inwc |

| Individual Component Setting Tolerances | | |
|---|---|---|
| Component EIN | As-Found | As-Left |
| 1E22-N055 (C,G) | ± 0.081 Vdc | ± 0.010 Vdc |
| 1E22-N655 (C,G) | ± 0.21 inwc | ± 0.15 inwc |

| Trip Setpoint and Loop Setting Tolerances | | | |
|---|---|---|---|
| Component EIN | Setpoint/Reset (inwc) | As-Found (inwc) | As-Left (inwc) |
| 1E22-N655 (C,G) ATM | 6.50 – setpoint | ± 0.21 | ± 0.15 |
| 1E22-N655 (C,G) Loop | 147.00 – setpoint | ± 0.64 | ± 0.16 |
| 1E22-N655 (C,G) ATM | 5.60 – reset | ± 0.21 | ± 0.15 |
| 1E22-N655 (C,G) Loop | 146.10 - reset | ± 0.64 | ± 0.16 |

| Loop Calibration - Allowable Value | |
|---|---|
| Component EIN | Allowable Value |
| 1E22-N655 (C,G) Loop | ≤ 151.5 inwc |

| M&TE Used In Calculation (if specified in calculation) | | | |
|---|---|---|---|
| Manufacturer | Model Number | Range | Total Accuracy (Eng. Units) |
| Heise | Digital Model 901B (or equivalent) | 0 – 160 inches | ±0.3392 inwc Temp band of (20°F to 120°F) |
| Fluke | 45 (or equivalent) | Range appropriate to measure 1-5 Volts (slow resolution) | ±0.004 Vdc |
| Precision Resistor | NA | 250 Ω | 0.02 Ω |

| USAR/Technical Specification Setpoints | | |
|---|---|---|
| Component EIN | Allowable Value / Design Setpoint | USAR/Technical Specification Section |
| 1E22-N655 (C,G) | ≤ 11.0 inches/ 6.5 inches | Tech. Spec. Table 3.3.5.1-1 Item 3.e / ORM Tbl 5,Item 3.e |

**Letter CPS-TTI-0069**
**File No. B99-00(12-21)-L**
**December 21, 2000**

**Tabulation of Pressure Transmitter Elevations**
**(4 Pages Attached)**

AmerGen

Clinton Power Station

December 21, 2000
CPS-TTI-0069
B99-00(12-21)-L

Mr. Brian M. Haynes
Terran Technologies, Inc.
1901 So. 6th Street
Omaha, NE. 68108

Subject: Walk Down Information

Dear Mr. Haynes:

The purpose of this correspondence is to formally transmit CPS walk down information for the attached transmitters. This walk down information was obtained to support development of the following calculations:

| | |
|---|---|
| IP-C-0087 (First Priority) | IP-C-0094 |
| IP-C-0062 (First Priority) | IP-C-0071 |
| IP-C-0084 (First Priority) | IP-C-0073 |
| IP-C-0070 (First Priority) | IP-C-0066 |
| IP-C-0067 (First Priority) | IP-C-0060 |
| IP-C-0076 | IP-C-0064 (Previously Provided) |
| IP-C-0058 | IP-C-0077 (Previously Provided) |
| IP-C-0059 | IP-C-0083 (Previously Provided) |

Construction Work Requests (CWR) 12330 and 12339 provide specific transmitter centerline elevation data in instrument racks 1H22P004, 1H22P027, 1H22P005 and 1H22P026. Transmitter centerline data obtained in each CWR was verified using known benchmark elevations. The majority of transmitters in the attached listing were not included in either CWR.

The transmitters on the attached listings are annotated as being in the upper or lower row of the rack. Each instrument rack's row elevation is assumed to be equivalent to the centerline elevation of the individual transmitters recorded in the CWRs. In the cases where several transmitter elevations from the same row were recorded in the CWRs, the elevations were averaged and these values were used to specify the transmitter centerline elevation. This assumption is valid since the walk downs performed in support of this letter confirmed that all transmitters in the same row for a given rack, are very close to the same elevation. Any differences in elevation were not discernable by inspection or by measuring from floor or grating elevation to transmitter centerline. The transmitters that were included in the CWR survey are listed by the CWR they were surveyed in.

**Transmitter Walk Down Data (Racks 1H22P004, P027, P005 and P0026)**

| Transmitter | Engineers Performing Walkdown | Building | Instrument Location | Floor Elev. | Height of center line above floor or rack row | Transmitter Centerline Elevation |
|---|---|---|---|---|---|---|
| 1B21N078A | WK/WW | Containment | 1H22P004 | 755' | Upper Row | 758.93' |
| 1B21N097A | WK/WW | Containment | 1H22P004 | 755' | Upper Row | 758.93' |
| 1B21N080A | WK/WW | Containment | 1H22P004 | 755' | Lower Row | 756.96' |
| 1B21N095A | N/A | Containment | 1H22P004 | 755' | CWR 12330 | CWR 12330 |
| 1B21N081A | WK/WW | Containment | 1H22P004 | 755' | Upper Row | 758.93' |
| 1B21N091A | WK/WW | Containment | 1H22P004 | 755' | Lower Row | 756.96' |
| 1B21N091E | WK/WW | Containment | 1H22P004 | 755' | Lower Row | 756.96' |
| 1E12N062A | WK/WW | Containment | 1H22P004 | 755' | Lower Row | 756.96' |
| 1E12N062C | WK/WW | Containment | 1H22P004 | 755' | Lower Row | 756.96' |
| 1B21N094A | WK/WW | Containment | 1H22P004 | 755' | Upper Row | 758.93' |
| 1B21N094E | WK/WW | Containment | 1H22P004 | 755' | Upper Row | 758.93' |
| 1C71N050A | WK/WW | Containment | 1H22P004 | 755' | Upper Row | 758.93' |
| 1B21N078B | WK/WW | Containment | 1H22P027 | 755' | Upper Row | 758.86' |
| 1B21N097B | N/A | Containment | 1H22P027 | 755' | CWR 12330 | CWR 12330 |
| 1B21N080B | WK/WW | Containment | 1H22P027 | 755' | Lower Row | 756.93' |
| 1B21N095B | N/A | Containment | 1H22P027 | 755' | CWR 12339 | CWR 12339 |
| 1B21N081B | WK/WW | Containment | 1H22P027 | 755' | Upper Row | 758.86' |
| 1B21N091B | WK/WW | Containment | 1H22P027 | 755' | Lower Row | 756.93' |
| 1B21N091F | WK/WW | Containment | 1H22P027 | 755' | Lower Row | 756.93 |
| 1E12N062B | WK/WW | Containment | 1H22P027 | 755' | Upper Row | 758.86' |
| 1E12N062D | WK/WW | Containment | 1H22P027 | 755' | Upper Row | 758.86' |
| 1B21N094B | WK/WW | Containment | 1H22P027 | 755' | Upper Row | 758.86' |
| 1B21N094F | WK/WW | Containment | 1H22P027 | 755' | Upper Row | 758.86' |
| 1C71N050B | WK/WW | Containment | 1H22P027 | 755' | Upper Row | 758.86' |
| 1B21N078C | WK/WW | Containment | 1H22P005 | 754'2" | Lower Row | 756.81' |
| 1B21N080C | N/A | Containment | 1H22P005 | 754'2" | CWR 12330 | CWR 12330 |
| 1B21N073C | WK/WW | Containment | 1H22P005 | 754'2" | Upper Row | 758.77' |
| 1B21N073G | N/A | Containment | 1H22P005 | 754'2" | CWR 12330 | CWR 12330 |
| 1B21N081C | WK/WW | Containment | 1H22P005 | 754'2" | Upper Row | 758.77' |
| 1B21N067C | N/A | Containment | 1H22P005 | 754'2" | CWR 12339 | CWR 12339 |
| 1B21N067G | WK/WW | Containment | 1H22P005 | 754'2" | Lower Row | 756.81' |
| 1C71N050C | WK/WW | Containment | 1H22P004 | 754'2" | Lower Row | 756.81' |
| 1B21N078D | WK/WW | Containment | 1H22P026 | 755' | Lower Row | 756.91 |
| 1B21N080D | N/A | Containment | 1H22P026 | 755' | CWR 12330 | CWR 12330 |
| 1B21N073D | N/A | Containment | 1H22P026 | 755' | CWR 12339 | CWR 12339 |
| 1B21N073H | WK/WW | Containment | 1H22P026 | 755' | Upper Row | 758.88 |
| 1B21N081D | WK/WW | Containment | 1H22P026 | 755' | Upper Row | 758.88 |
| 1B21N067D | WK/WW | Containment | 1H22P026 | 755' | Lower Row | 756.91 |
| 1B21N067H | WK/WW | Containment | 1H22P026 | 755' | Lower Row | 756.91 |
| 1C71N050D | N/A | Containment | 1H22P026 | 755' | CWR 12330 | CWR 12330 |

## Transmitter Walk Down Data (Remaining Instruments)

| Transmitter | Engineers Performing Walkdown | Building | Instrument Location | Floor Elev. | Height of center Line above floor or CWR row | Transmitter Elevation |
|---|---|---|---|---|---|---|
| 71B21N400A | WK/WW | Containment | SPS-100 | 755' | 27.75" | 757.31' |
| 1B21N400B | N/A | Containment | SPS-101 | 754'2" | CWR 12339 | CWR 12339 |
| 1B21N400E | WK/WW | Containment | SPS-102 | 755' | 28.25" | 757.35' |
| 1B21N400F | WK/WW | Containment | SPS-103 | 755' | 28" | 757.33' |
| 1C71N052A | WK/WW | Turbine | N-104 | 762' | 36.25" | 765.02' |
| 1C71N052B | WK/WW | Turbine | K-122 | 762' | 56.25" | 766.69' |
| 1C71N052C | WK/WW | Turbine | N-104 | 762' | 56.25" | 766.69' |
| 1C71N052D | WK/WW | Turbine | K-122 | 762' | 56.25" | 766.69' |
| 1B21N076A | WK/WW | Turbine | N-112 | 769.5' | 54.25" | 774.02' |
| 1B21N076B | WK/WW | Turbine | N-119 | 762' | 55.88" | 766.66' |
| 1B21N076C | WK/WW | Turbine | M-106 | 762' | 55.5 | 766.63' |
| 1B21N076D | WK/WW | Turbine | N-109 | 769.5' | 54.25 | 774.02' |
| 1E22N055C | WK/WW | Fuel | AH-116 | 737' | 48.75 | 741.06' |
| 1E22N055G | WK/WW | Fuel | AH-116 | 737' | 48.75 | 741.06' |

## Revised Walk Down Data (Previously Provided by CPS-TTI-0067)

| Transmitter | Engineers Performing Walkdown | Building | Instrument Location | Floor Elev. | Height of center Line above floor or CWR row | Transmitter Elevation |
|---|---|---|---|---|---|---|
| 1E12N055A | WK/WW | Aux. Bldg | 1H22P018 | 707' 6" | 46.25" | 711.35' |
| 1E12N055C | WK/WW | Aux. Bldg | 1H22P055 | 707' 6" | 22.5" | 709.38' |
| 1B21N068A | WK/WW | Containment | 1H22P004 | 755' | CWR 12330 | CWR 12330 |
| 1B21N068E | WK/WW | Containment | 1H22P004 | 755' | Upper Row | 758.93' |
| 1B21N401A | WK/WW | Containment | SPS-100 | 755' | 48.75" | 759.1' |
| 1B21N401B | WK/JB | Containment | SPS-101 | 754'2" | 32.25" | 756.85 |
| 1B21N068B | WK/JA | Containment | 1H22P027 | 755' | Upper Row | 758.86' |
| 1B21N068F | WK/JA | Containment | 1H22P027 | 755' | Upper Row | 758.86' |
| 1B21N401E | WK/JA | Containment | SPS-102 | 755' | 49" | 759.08' |
| 1B21N401F | WK/JA | Containment | SPS-103 | 755' | 48.75" | 759.06' |

Walk downs performed by:

W.S. Koleff WS Koleff / 12/21/00 J. Brannon J Brannon / 12/21/2000

W. White Warren C. White 12/21/00 J. Ashcraft WS Koleff / 12/21/00
for J. Ashcraft
per Telecon.

This approach will provide the most accurate means of providing transmitter centerline elevation data. In this regard, the information previously provided by letter CPS-TTI-0067 is superceded by this letter.

Some of the transmitters walked down were not included in the surveys conducted by the CWRs. In these cases, centerline measurements were recorded and added to the top of floor or grating elevations to derive the transmitter centerline elevations.

If you have any questions regarding this matter please feel free to contact myself at extension 3442 or Steve Koleff at extension 4031.

John W. Smith

J.W. Smith, Project Manager
NSED C&I Design Engineering

**Instrument Calibrations Data Sheet Walkdown Information, CPS OMP8801.05D001 for Transmitter 1E22N055C & G, dated April 5, 1986.**

**(2 Pages Attached)**

CPS No. OMP8801.05D001
(Rev. 0)

MWR No. N/A

INST No. E22-N055C

| Pool level | input | output |
|---|---|---|
| -115 | 1255" | 1 UP |
| -115 | 1253" | 2 UP |
| 101 | 1240.5" | 3 UP |
| +115 | 1240" | 4 UP |
| +115 | 1255.5" | 5 UP |

COMMENTS.

Performed By: G.F. Ledey (Print) George E. Ledey (Initials) 4-5-86 (Date)

Performed By: (Print) (Initials) (Date)

Reviewed By: (Signature) 4-5-86 (Date)

KEY MAINTENANCE HISTORY RECORD YES ☑ NO ☐

M&TE TRACE REQUIRED YES ☐ NO ☑

CPS No. 0MP8801.05D001
(Rev. 0)

MWR No. N/A

INST No. E22-N055G

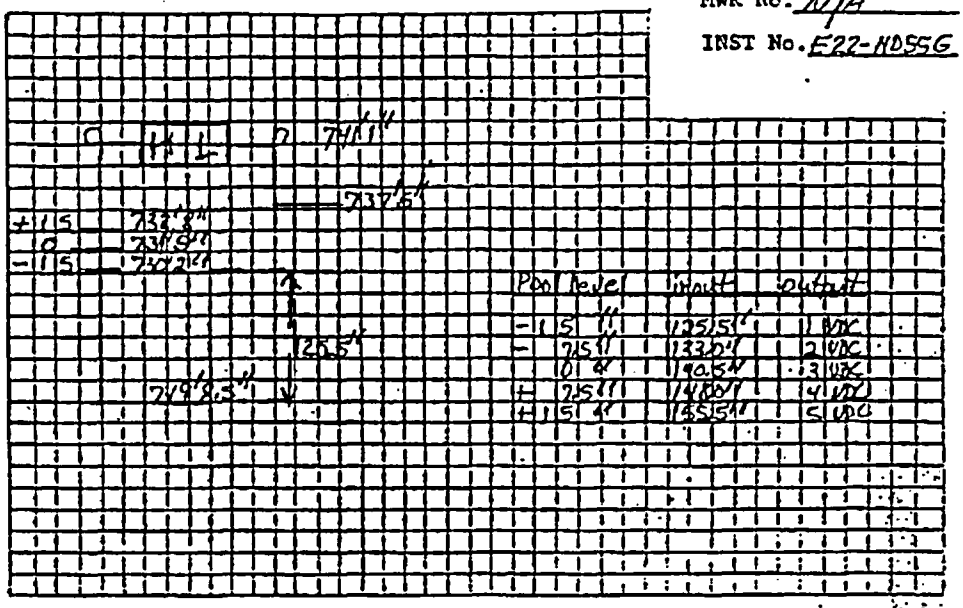


COMMENTS.

Performed By: G.E.Lepley (Print) George E. Lepley (Initials) 4-5-86 (Date)

Performed By: (Print) (Initials) (Date)

Reviewed By: (Signature) 4-5-86 (Date)

KEY MAINTENANCE HISTORY RECORD YES ☑ NO ☐

M&TE TRACE REQUIRED YES ☐ NO ☑