GE Nuclear Energy

Nuclear Services
175 Curtner Ave. M/C 747
San Jose, CA 95125
(408) 925-1913, Fax (408) 925-6710
E-mail: george.stramback@gene.ge.com

MFN 04-047
April 21, 2004

U.S Nuclear Regulatory Commission
Document Control Desk
Washington, D.C. 20852-2738

Attention: Chief, Information Management Branch
Program Management
Policy Development and Analysis Staff

Subject: **Responses to Informal NRC RAIs and Concerns From A 03/23/04 Conference Call Regarding The Improved BPWS, LTR NEDO-33091**

During the NRC Staff review of the Reference 1 Licensing Topical Report (LTR), through emails and a 03/23/04 GE-NRC conference call the NRC provided a number of informal requests for additional information (RAIs) and voiced some other concerns with respect to Reference 1. Enclosure 1 provides GE's responses to all of those RAIs and concerns.

If you have any questions, please contact, Kurt Schaefer at (408) 925-2426 or myself.

Sincerely,

for

George Stramback
Manager, Regulatory Services
GE Nuclear Energy
(408) 925-1913
george.stramback@gene.ge.com

Project No. 710

Reference:

1. BWR Owners' Group Licensing Topical Report, *Improved BPWS Control Rod Insertion Process*, NEDO-33091 (non-proprietary), April 2003.

Enclosures:

1. Responses to NRC Staff Requests For Additional Information on NEDO-33091.

D065

cc: AB Wang (NRC)
Bo Pham (NRC)
J. Tuttle (GNF)
DRF 0000-0026-2578

Responses to NRC Staff Requests For Additional Information On NEDO-33091

1. The LTR states that it is impossible for a control rod to become decoupled during the shutdown process following the improved BPWS. Please provide detailed information about the different types of control rod drives (CRDs) used for BWR-2 to BWR-6 plants with respect to the coupling between the CRD and control rod during shut-down. Based on this information, please also explain why it is not possible for the CRD and control rod to be decoupled.

   Response:
   All Reg. Guide 1.70, Rev.3 BWR UFSARs contain failure mode and effects analyses (FMEA) for the CRD system. Attachment 1 includes some pages from the FMEA in a typical BWR UFSAR (i.e., Limerick). As stated in the last paragraph of page 4.6-18, no single failure can of itself initiate a rod withdrawal. This statement is even more applicable, when the collet fingers are locked, such as when there is no CR movement or the CR is being inserted. (See Limerick Figure 4.6-3.) For a CR to withdraw, the six collet fingers must be unlocked so that the index tube can be lowered without being latched to a stop by the collet fingers. During CR insertion, if a mechanical/hydraulic failure occurs that stops all upward hydraulic force, the most the CR could withdraw is 6 inches to the next index tube latching indentation.

   As summarized in UFSAR subsection 4.6.2.3.1.4, a limiting multi-failure scenario with the collet fingers remaining open has been evaluated. The resulting maximum CR withdrawal speed is 2 ft/sec, which is bounded by the 5 ft/sec CR drop speed assumed in the Control Rod Drop Accident (CRDA) analyzed in UFSAR Chapter 15, as discussed in UFSAR subsection 4.6.2.3.2.2.

   Attachment 1 also provides the UFSAR Control Rod Drive (CRD) and Control Rod (CR) design figures for a BWR/2 (Oyster Creek), BWR/3 (Monticello), BWR/4 (Limerick), BWR/5 (La Salle) and BWR/6 (Perry). For all BWR/2-6 plants, these figures demonstrate that a CR sits atop its associated CRD, and that it is physically impossible for a CR to move down past (i.e., to be withdrawn) its CRD.

   Normally, a CR cannot become uncoupled from its CRD, because the CRD spud ("6-fingers") mechanically locks into the CR socket, and operator action is required to unlock this coupling. It is possible, due to a CRD assembly error, for a CRD to not properly lock into CR. In this case, CR movement (withdrawal and insertion) and scram are not impaired, because gravitational force will maintain the CR on top of its CRD. Plant Technical Specifications already provide provisions for coupling checks and steps to be taken if a CR is uncoupled from its drive.

   The improved BPWS only involves CR insertion steps that prevent the CRs from dropping (i.e., separating from CRD), and does not involve/affect any of the functions discussed above.

Responses to NRC Staff Requests For Additional Information On NEDO-33091

2. In the GE Proprietary Information Class III document (WE-1048), which describes the control rod drop design basis accident, page 6-16, Section 6.4, Control Rod Drop Accident, states the following:

   "One of the four design basis accidents is a control rod drop. The design basis control rod drop accident is defined as the complete (but unnecessarily sudden) rupture, breakage, or disconnection of a fully inserted control rod drive from its cruciform control blade at or near the coupling and in such a way that the blade somehow becomes stuck at its location inserted."

   This description includes rupture and breakage as mechanisms that may trigger the rod drop accident (RDA). Please explain why the BWROG/GE changed from this definition to the exclusion of CRD failure as one of the causes for RDA. Is the BWROG/GE proposing a new position that CRD failure will not be considered as the cause for RDA in future analyses?

   Response:
   NEDO-33091 Rev. 2.0, "BWR Owners' Group Licensing Topical Report: Improved BPWS Control Rod Insertion Process", describes an improved control rod (CR) insertion process. The rod drop accident scenario, also described in the report (1.0 Background), requires the following conditions:

   1. The CR is not coupled to the control rod drive (CRD).
   2. The CR is stuck.
   3. The CRD is withdrawn, leaving the stuck CR suspended in position.
   4. The CR subsequently becomes unstuck and drops freely at 3.11 feet/second.

   Because the Improved BPWS process, described by NEDO-33091, is only for CR insertion and does not involve CR withdraw, then one of the primary factors in the rod drop accident (item 3, above) is eliminated. Therefore, the rod drop accident scenario is eliminated from consideration for this CR insertion process.

   Additionally, there are no single failure scenarios that will result in a CR withdrawal/ejection/drop, including CRD withdrawals with CR velocities corresponding to the control rod drop accident. "There are no known single malfunctions that cause the unplanned (i.e., no operator action is involved) withdrawal of even a single control rod." [See (in Attachment 2) Limerick UFSAR 4.6.2.3.2.2 for BWR/2-5 CRDs and River Bend UFSAR 4.6.2.3.2.2 for BWR/6 CRDs.] This applies to both BWR 2-5 CRDs and BWR/6 CRDs, because they are essentially same regarding the design of the locking mechanism and the mechanism for CRD insertion, withrawal and scram. (The primary difference between these CRDs is the mechanism for slowing the control rod at the end of a scram stroke.) The scenarios, which result in CR withdrawal, require multiple failures combined with a CR withdrawal signal (not part of the improved CR insertion process). Otherwise, the CRD latching mechanism, the hydraulic conditions and/or the control rod drive housing support prevent CR withdrawal. [See (in Attachment 2) Limerick UFSAR 4.6.2.3.2.2.1 through 4.6.2.3.2.2.12 and River Bend UFSAR 4.6.2.3.2.2.1 through 4.6.2.3.2.2.12 for BWR/6 CRDs.]

For example, if the drive housing fails at the attachment weld (River Bend UFSAR 4.6.2.3.2.2.1), "the CRD and housing would be blown downward against the support structure" and "if the collet were to remain latched" (which is expected in this scenario), "no further control rod ejection would occur." Also, the "maximum deflection is approximately 3 in." If the "failure were to occur while the control rod is being withdrawn" (i.e., during a planned withdrawal) and "if the collet were to stay unlatched", then "the steady-state rod withdrawal velocity would be 0.3 ft/sec" and would continue "until driving pressure was removed from the pressure-over port" (i.e., the single notch out sequence stops automatically or the operator terminates the continuous withdraw command). Note that unlike the latter scenario, the improved BPWS CR insertion process does not initiate a CR withdrawal command.

Regardless of the scenario, all CRD failure modes and effects evaluations in the UFSARs are unaffected by the Improved BPWS, which only involves CR insertion changes.

3. The improved BPWS will significantly reduce the time of the normal shut down process. The LTR states that the total rod manipulation steps for shutting down a medium sized reactor will be reduced from approximately 400 to 150 steps. While this reduction allows for faster insertion of negative reactivity, the rapid power decrease may cause quenching of the reactor pressure vessel or the necessary speeding up of other processes. Please provide a discussion about the impact of the improved BPWS on other procedures in this regard, if any. In particular, please address how the reactor vessel Pressure-Temperature limit will be maintained during the shut down process.

   Response:
   The improved BPWS does not adversely (if at all) affect any normal shutdown process, including maintaining the reactor vessel cool down time rate within its Pressure-Temperature limits. Current operating procedures already account for the effects of the most limiting (fastest negative reactivity) CR insertion scenario, i.e., scram. Operations control the cool down process by controlling reactor dome pressure, coolant flow and coolant temperature, regardless of the CR insertion process.

4. Using the improved BPWS process, control rods not confirmed to be coupled are required to be fully inserted prior to reducing power below the low power set point (LPSP). How does the improved BPWS ensure this full insertion prior to the LPSP? Is it possible for some of the un-confirmed rods to not be fully inserted with power dropping below the LPSP?

Response:
As with the original BPWS, the insertion steps are controlled by plant procedures, and thus, to implement the improved BPWS, plant procedures will be updated. Section 5, Item A of the LTR provides guidance to be used in updating plant procedures, to ensure that any un-confirmed CR are fully inserted prior to reaching the LPSP. The probability of an un-confirmed rod not being fully inserted, while the power drops below the LPSP, is remote because of the followings:

a. The LTR requires that each CR that has not been confirmed coupled (since its last withdrawal) to be fully inserted prior to reducing power below the LPSP. Therefore, the operator is aware of the status of each rod.

b. The control rods are inserted, as much as reasonably possible, in the same order as specified for the standard BPWS. Therefore, the operator is absolutely aware of the status of each control rod before the shutdown process begins.

c. The LTR states that operations shall confirm control rod coupling integrity for all rods that are fully withdrawn and there would be two documented coupling checks or one verified and documented coupling check. Therefore, the probability of not confirming the coupling integrity of the fully withdrawn rod is remote.

For normal shutdowns, it is expected that all potentially un-confirmed CRs will be inserted prior to reducing power to 40%, which is significantly above the LPSP. However, the last paragraph in LTR page 5-1 addresses the postulated scenario of a plant being below LPSP prior to having all un-confirmed CRs fully inserted. The LTR states, "*If shutdown is required and all rods, which are not confirmed coupled, cannot be fully inserted prior to the power dropping below the LPSP (such as shortly after a startup), then the standard (e.g., Reference 2) BPWS must be observed below the LPSP or a scram is required. However, during the shutdown process using the standard BPWS and after all rods, which were not confirmed coupled, have been fully inserted, the improved BPWS control rod insertion process may be used.*"

Therefore, the improved BPWS is only allowed to be used when all un-confirmed CRs are fully inserted prior to power dropping below the LPSP.

5. Page 2-1 of the LTR states, "require control rod confirmations. . . ." Does this requirement apply to all control rods? If not, please clarify which control rods need to be confirmed.

   Response:
   Currently, plant Technical Specifications require all CRs to be coupled to their CRDs. Technical Specifications Surveillances require coupling checks (a) prior to reactor criticality after completing core alterations, (b) anytime a CR is withdrawn to the full out position, and (3) following maintenance on or modification to a CR or CRD system. These requirements are not affected by the improved BPWS.

   LTR Section 5 Item A discusses how the improved BPWS goes beyond the above requirements. To avoid a single operator error (SOE), rod couplings must be checked twice or be verified by a second operator. This applies to all CRs that are not already fully inserted.

6. Will the improved BPWS replace all existing BPWSs in U.S. BWRs? Will there be any exceptions?

   Response:
   The improved BPWS does not replace the existing BPWS. The improved BPWS only provides an alternate approach to the existing BPWS with respect to control rod insertions, when a plant is being shutdown and all non-fully inserted control rods have been confirmed to be coupled. The improved BPWS may be used by all U.S. BWRs, but it is not mandatory. The implementation of the improved BPWS is a plant-specific decision.

Responses to NRC Staff Requests For Additional Information On NEDO-33091

Addressing NRC Concerns From the 3/23/05 Conference Call & Clarification of the Response to Improved BPWS LTR RAI 1.1

1. Explanation of the difference between the velocities stated in UFSAR 4.6.2.3.1.4 (2 fps) and 4.6.2.3.2.2.7 (11.8 fps).

The velocity stated in 4.6.2.3.1.4 (2 fps) is the result of the scenario described in 4.6.2.3.2.2.2.1 Pressure-Under (Insert) Line Break. In this scenario, failure of the insert line occurs while the rod is being withdrawn. The flange ball check valve would lift and close the flow path out through the failed insert line due to the differential pressure. Then the under-piston water (while CRD is withdrawing) would be routed to the flange vessel ports (under the ball check valve) and discharged into the reactor vessel. Because the hydraulic resistance of this flow path is less than the normal resistance through the Directional Control Valve (i.e., a throttled valve), the velocity increases to 2 fps if the collet is stuck open (in the unlatched position). Normally, at this velocity (2 fps) the hydraulic force would not be sufficient to hold the collet open and the collet would be forced into the latched position, hence, stopping rod withdrawal. In summary, the operator selects this rod for withdrawal and two failures are assumed: failed insert line and collet failure to latch during the higher than normal velocity condition.

The velocity stated in 4.6.2.3.2.2.7 (11.8 fps) is the result of the failure of the flange ball check valve plug while the rod is being withdrawn. The under-piston water (while CRD is withdrawing) would be discharged through the hole in the side of the flange and directly out to atmosphere. Because the hydraulic resistance of this flow path is significantly less than the normal resistance through the Directional Control Valve (i.e., a throttled valve) or through the flange vessel ports (mentioned above), the velocity increases to 11+ fps if the collet is stuck open. Normally, at this high velocity the hydraulic force would not be sufficient to hold the collet open and the collet would be forced into the latched position, hence, stopping rod withdrawal. In summary, the operator selects this rod for withdrawal and two failures are assumed: failed flange ball check valve plug and collet failure to latch during the higher than normal velocity condition.

2. Explanation of the failure scenario described in 4.6.2.3.2.2.11 relative to single failure.

Two cases could lead to continuous rod withdrawal following a deliberate withdrawal command.

Case 1: Following a withdrawal command and assuming the signal terminates as expected, a failure of the Directional Control Valve to close would cause the rod to continue to withdraw.

Case 2: Following a withdrawal command and assuming the signal terminates as expected, a failure of the collet to return to its latched position would cause the rod to continue to drift out.

Yes, a single failure (failure of Directional Control Valve to close or failure of the collet to return to its latched position) would cause the rod to continuously drift out. In summary, an inadvertent continuous rod withdrawal must be first initiated by the operator's withdrawal command followed by one of these failures.

3. Explanation of the statement "unplanned withdrawal" in 4.6.2.3.2.2.

In the 4.6.2.3.2.2 statement "There are no known single malfunctions that cause the unplanned withdrawal of even a single control rod," an "unplanned withdrawal" is a CR withdrawal that does not involve any operator action, e.g., the operator does not initiate a CR withdrawal.

RAI 1.1 has been renumbered as RAI 2, above. The response to RAI 2, above, is the clarified response to RAI 1.1.

Responses to NRC Staff Requests For Additional Information On NEDO-33091

Attachment 1

UFSAR CRD FMEA and CRD & CR UFSAR Design Figures for BWR/2 - 6

As is illustrated in Figure 4.6-3, the locking mechanism is a ratchet-type device and does not interfere with rod insertion. The speed at which the drive moves is determined by the flow through the insert speed control valve, which is set for approximately 4 gpm for a shim speed (nonscram operation) of 3 in/sec. During normal insertion, the pressure on the downstream side of the speed control valve is 90-100 psi above reactor vessel pressure. However, if the drive slows for any reason, the flow through and the pressure drop across the insert speed control valve decreases; the full differential pressure (260 psi) is then available to cause continued insertion. With 260 psi differential pressure acting on the drive piston, the piston exerts an upward force of 1040 pounds.

4.6.1.2.5.2 Rod Withdrawal

Rod withdrawal is, by design, more involved than insertion. The collet fingers (latch) must be raised to reach the unlocked position (Figure 4.6-3). The notches in the index tube and the collet fingers are shaped so that the downward force on the index tube holds the collet fingers in place. The index tube must be lifted before the collet fingers can be released. This is done by opening the drive insert valves (in the manner described in the preceding paragraph) for approximately one second. The withdraw valves are then opened, applying driving pressure above the drive piston, and opening the area below the piston to the exhaust header. Pressure is simultaneously applied to the collet piston. As the piston raises, the collet fingers are cammed outward, away from the index tube, by the guide cap.

The pressure required to release the latch is set and maintained at a level high enough to overcome the force of the latch return spring, plus the force of reactor pressure opposing movement of the collet piston. When this occurs, the index tube is unlatched and free to move in the withdraw direction. Water displaced by the drive piston flows out through the withdraw speed control valve, which is set to give a rod shim speed of approxiately 3 in/sec. The entire valving sequence is automatically controlled, and is initiated by a single operation of the rod withdraw switch.

Rod withdrawal will not occur without permissive operator action. Following a deliberate operator withdrawal action, a rod drift could occur due to failure of its collet assembly to return to the locked position. The operator can interrupt this withdrawal with a scram or an insert signal. No single failure can of itself initiate a rod withdrawal.

4.6.2.3.1 Control Rods

4.6.2.3.1.1 Materials Adequacy Throughout Design Lifetime

The adequacy of the materials throughout the design life is evaluated in the mechanical design of the control rods. The primary materials, boron carbide (B_4C) powder, solid hafnium, and 304 austenitic stainless steel, have been found suitable in meeting the demands of the BWR environment.

4.6.2.3.1.2 Dimensional and Tolerance Analysis

Layout studies are done to ensure that, given the worst combination of part tolerance ranges at assembly, no interference exists that will restrict the passage of control rods. In addition, preoperational verification is made on each control blade system to show that the acceptable levels of operational performance are met.

4.6.2.3.1.3 Thermal Analysis of the Tendency to Warp

The various parts of the control rod assembly remain at approximately the same temperature during reactor operation, negating the problem of distortion or warpage. What little differential thermal growth that could exist is allowed for in the mechanical design. A minimum axial gap is maintained between absorber rod tubes and the control rod frame assembly for this purpose. Use of dissimilar metals (stainless steel and hafnium) is evaluated to ensure that any effects due to thermal expansion or irradiation growth are acceptable.

4.6.2.3.1.4 Forces for Expulsion

An analysis has been performed which evaluates the maximum pressure forces which could tend to eject a control rod from the core. The results of this analysis are given in Section 4.6.2.3.2.2.2. In summary, if the collet were to remain open, which is unlikely, calculations indicate that the steady-state control rod withdrawal velocity would be 2 ft/sec for a pressure-under line break, the limiting case for rod withdrawal.

4.6.2.3.1.5 Functional Failure of Critical Components

The consequences of a functional failure of critical components have been evaluated and the results are covered in Section 4.6.2.3.2.2.

4.6.2.3.1.6 Precluding Excessive Rates of Reactivity Addition

In order to preclude excessive rates of reactivity addition, analysis has been performed both on the velocity limiter device, and the effect of probable control rod failures (Section 4.6.2.3.2.2).

4.6.2.3.2 Control Rod Drives

4.6.2.3.2.1 Evaluation of Scram Time

The rod scram function of the CRD system provides the negative reactivity insertion required by safety design basis as stated in Section 4.6.1.1.1. The scram time shown in the description is adequate as shown by the transient analyses of Chapter 15.

4.6.2.3.2.2 Analysis of Malfunction Relating to Rod Withdrawal

There are no known single malfunctions that cause the unplanned withdrawal of even a single control rod. However, if multiple malfunctions are postulated, studies show that an unplanned rod withdrawal can occur at withdrawal speeds that vary with the combination of malfunctions postulated. In all cases the subsequent withdrawal speeds are less than that assumed in the rod-drop accident analysis as discussed in Chapter 15. Therefore, the physical and radiological consequences of such rod withdrawals are less than those analyzed in the rod-drop accident.

4.6.2.3.2.2.1 Drive Housing Failure at Attachment Weld

The bottom head of the reactor vessel has a penetration for each CRD location. A drive housing is raised into position inside each penetration and is fastened by welding. The drive is raised into the drive housing and bolted to a flange at the bottom of the housing. The housing material is seamless, Type 304 stainless steel pipe with a minimum tensile strength of 75,000 psi. The basic failure considered here is a complete circumferential crack through the housing wall at an elevation just below the J-weld.

Static loads on the housing wall include the weight of the drive and the control rod, the weight of the housing below the J-weld, and the reactor pressure acting on the 6 inch diameter cross-sectional area of the housing and the drive. Dynamic loading results from the reaction force during drive operation.

If the housing were to fail as described, the following sequence of events is foreseen:

a. The housing would separate from the reactor vessel.

b. The CRD and housing would be blown downward against the support structure, by reactor pressure acting on the cross-sectional area of the housing and the drive.

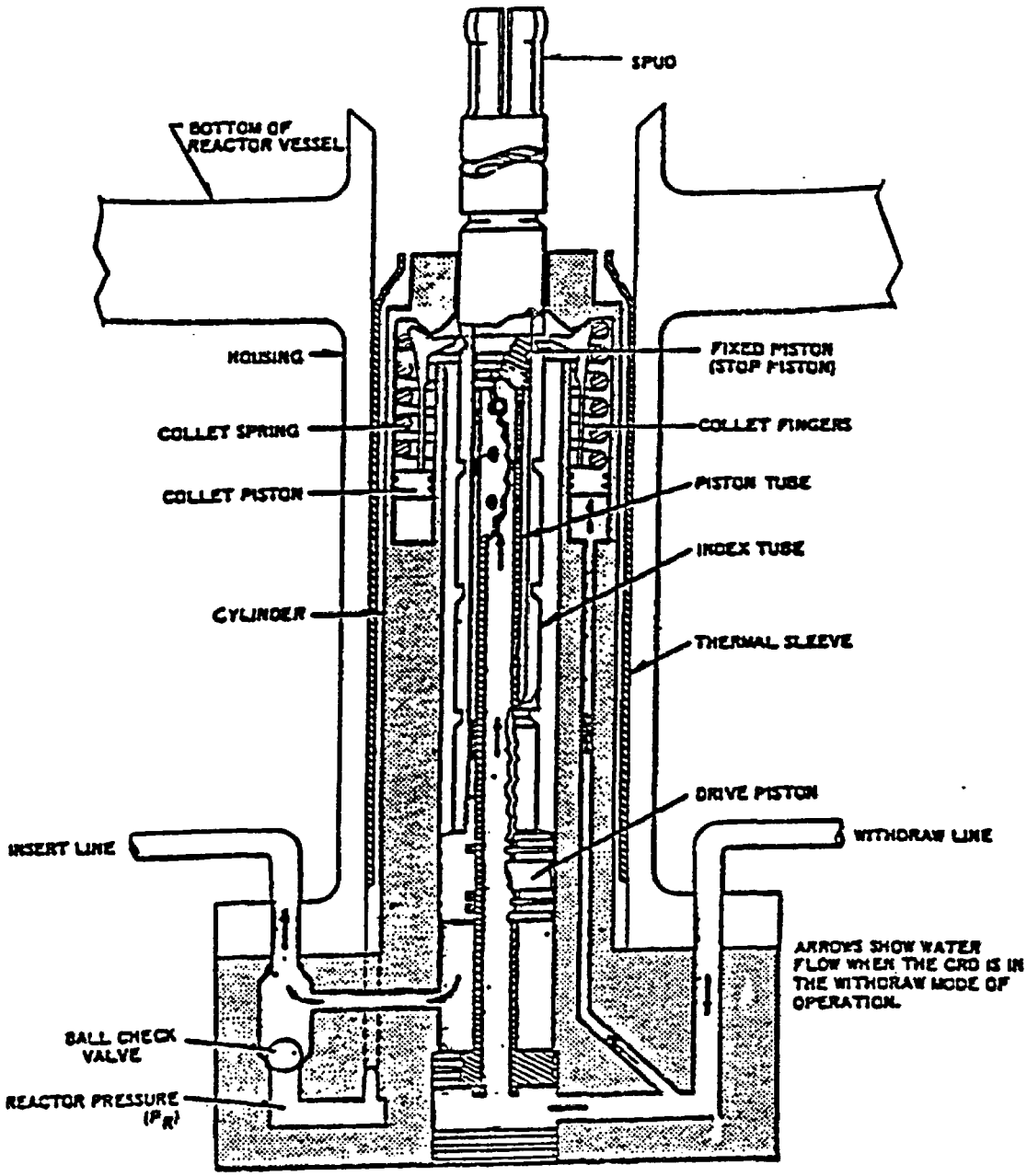

GPU NUCLEAR CORPORATION OYSTER CREEK NUCLEAR GENERATING STATION UPDATED FINAL SAFETY ANALYSIS REPORT	CONTROL ROD DRIVE—CUTAWAY	
	REV. 0, 12/84	FIGURE 4.6-2

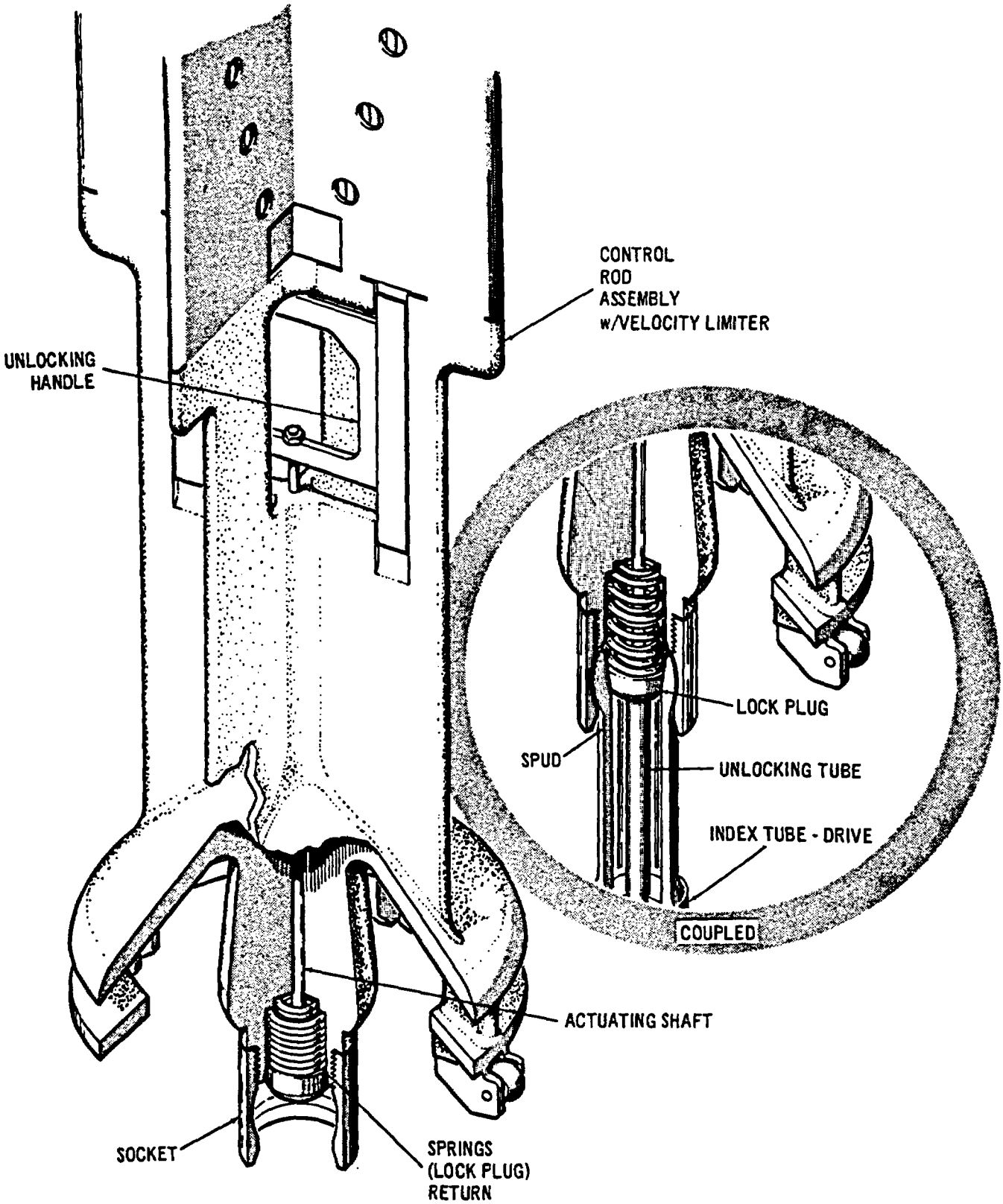

GPU NUCLEAR CORPORATION OYSTER CREEK NUCLEAR GENERATING STATION UPDATED FINAL SAFETY ANALYSIS REPORT	CONTROL ROD TO DRIVE COUPLING ISOMETRIC
	REV. 0, 12/84 — FIGURE 4.6-4

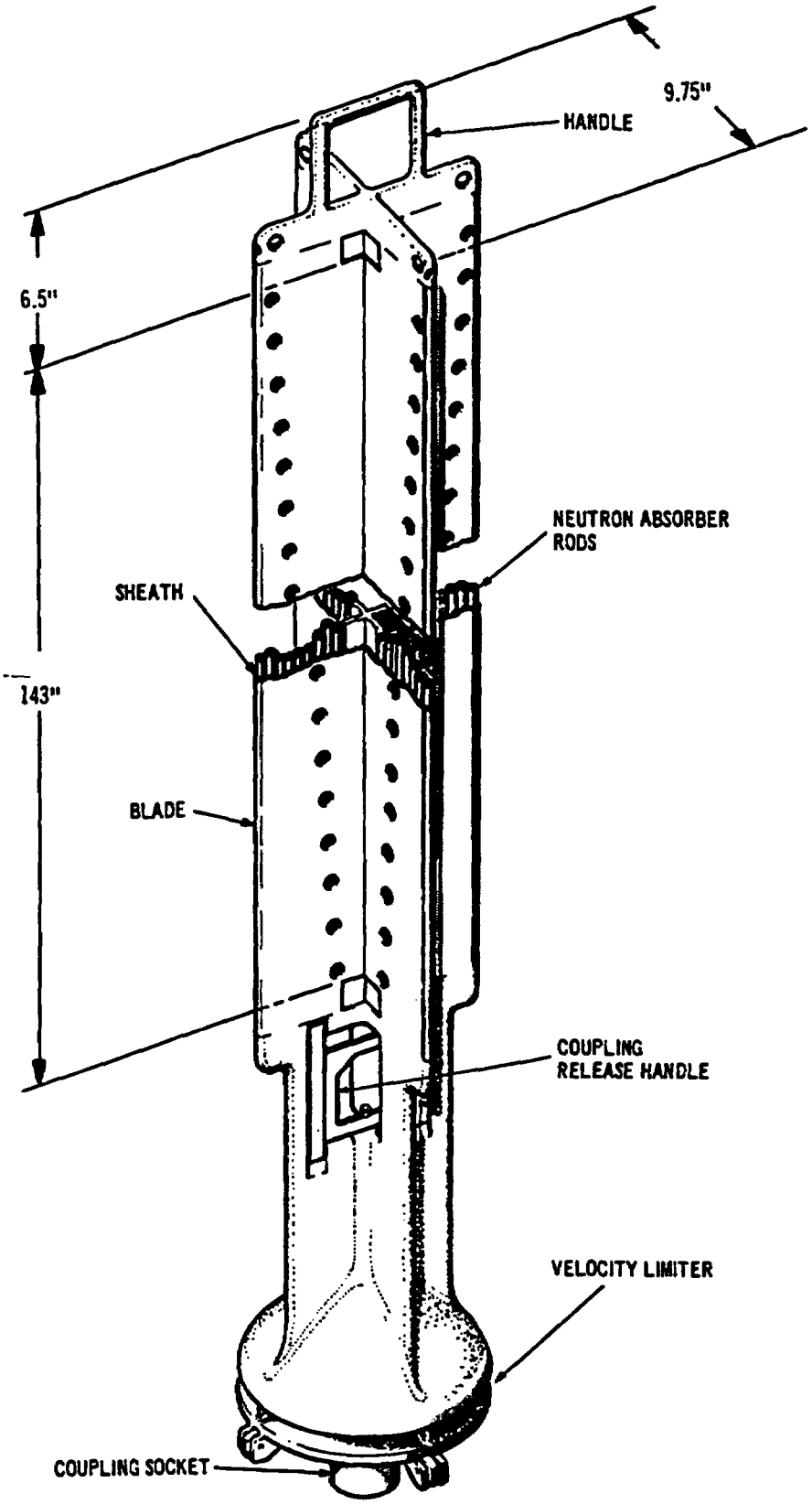

GPU NUCLEAR CORPORATION OYSTER CREEK NUCLEAR GENERATING STATION UPDATED FINAL SAFETY ANALYSIS REPORT	CONTROL ROD - ISOMETRIC
	REV. 0, 12/84 — FIGURE 4.6-7

Figure 3.5-1 Control Rod Assembly Isometric

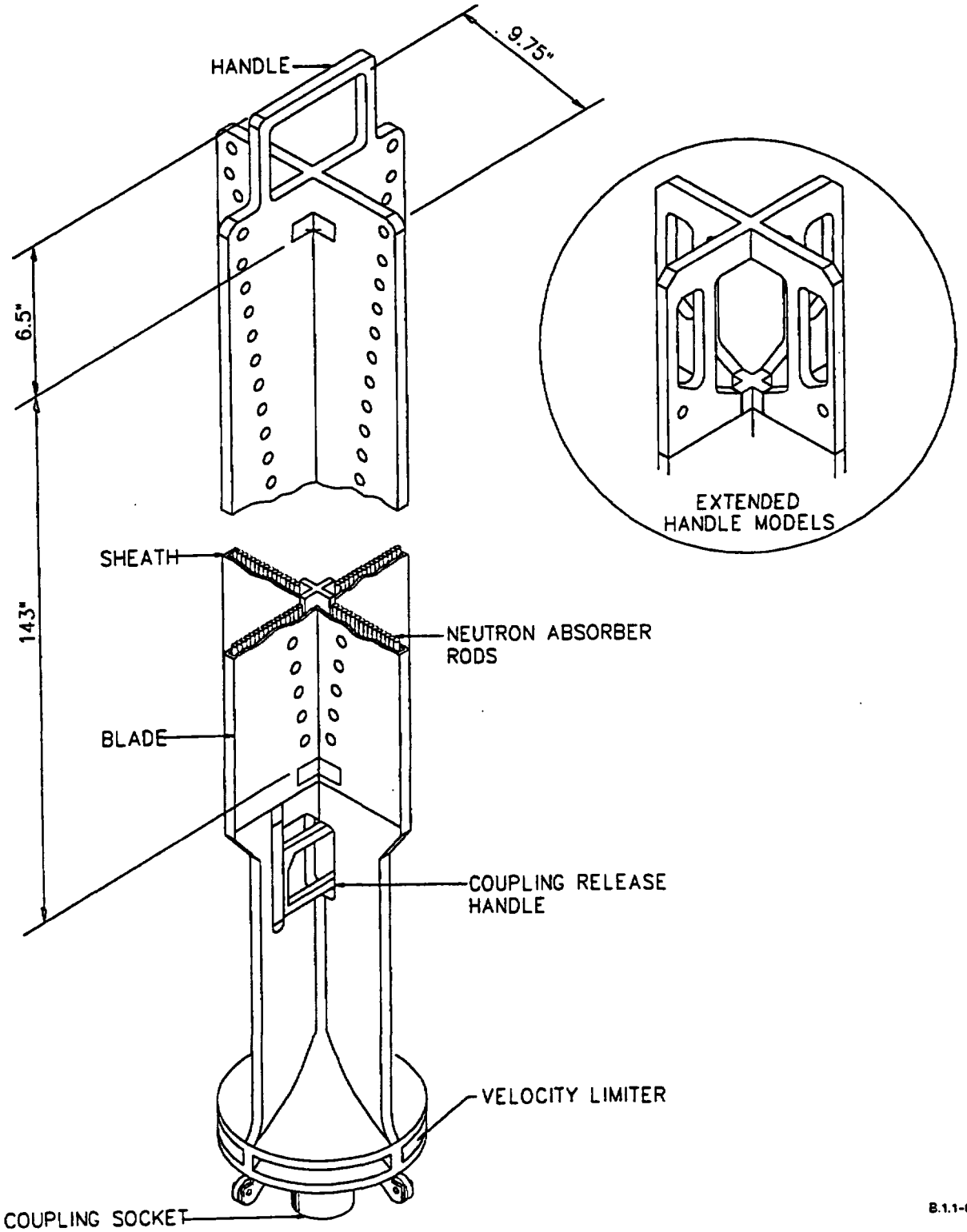

Figure 3.5-1a Duralife - 230 Control Blade

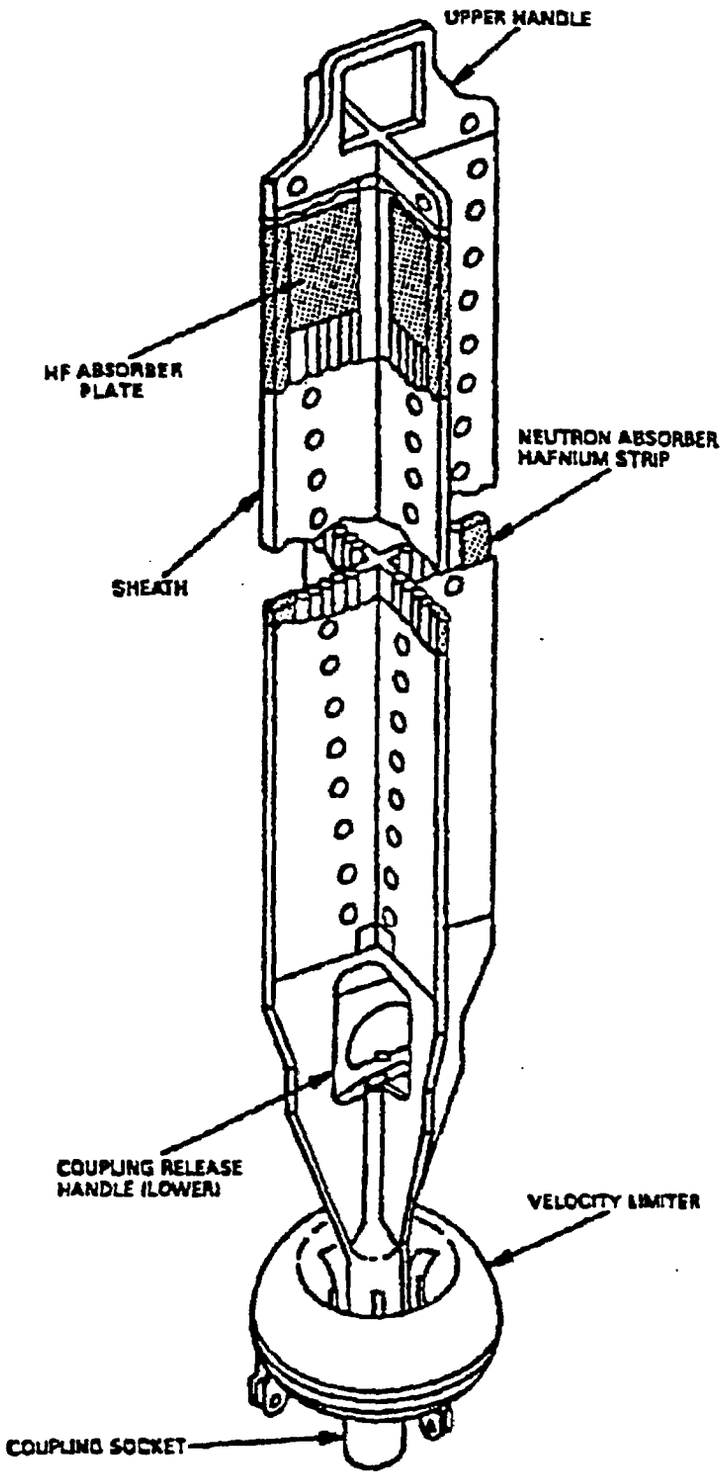

Figure 3.5-2 Control Rod Assembly and Drive Coupling Isometric

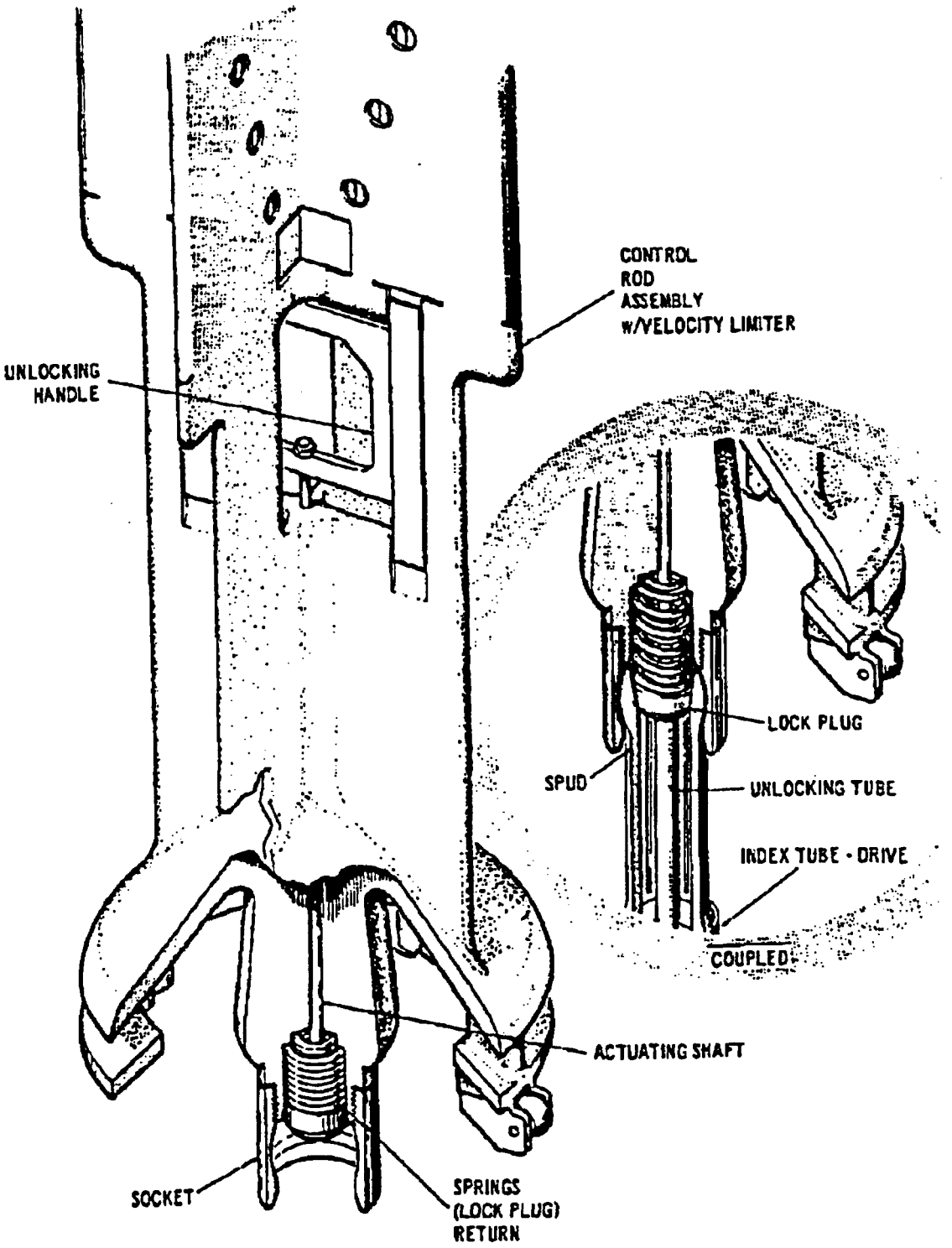

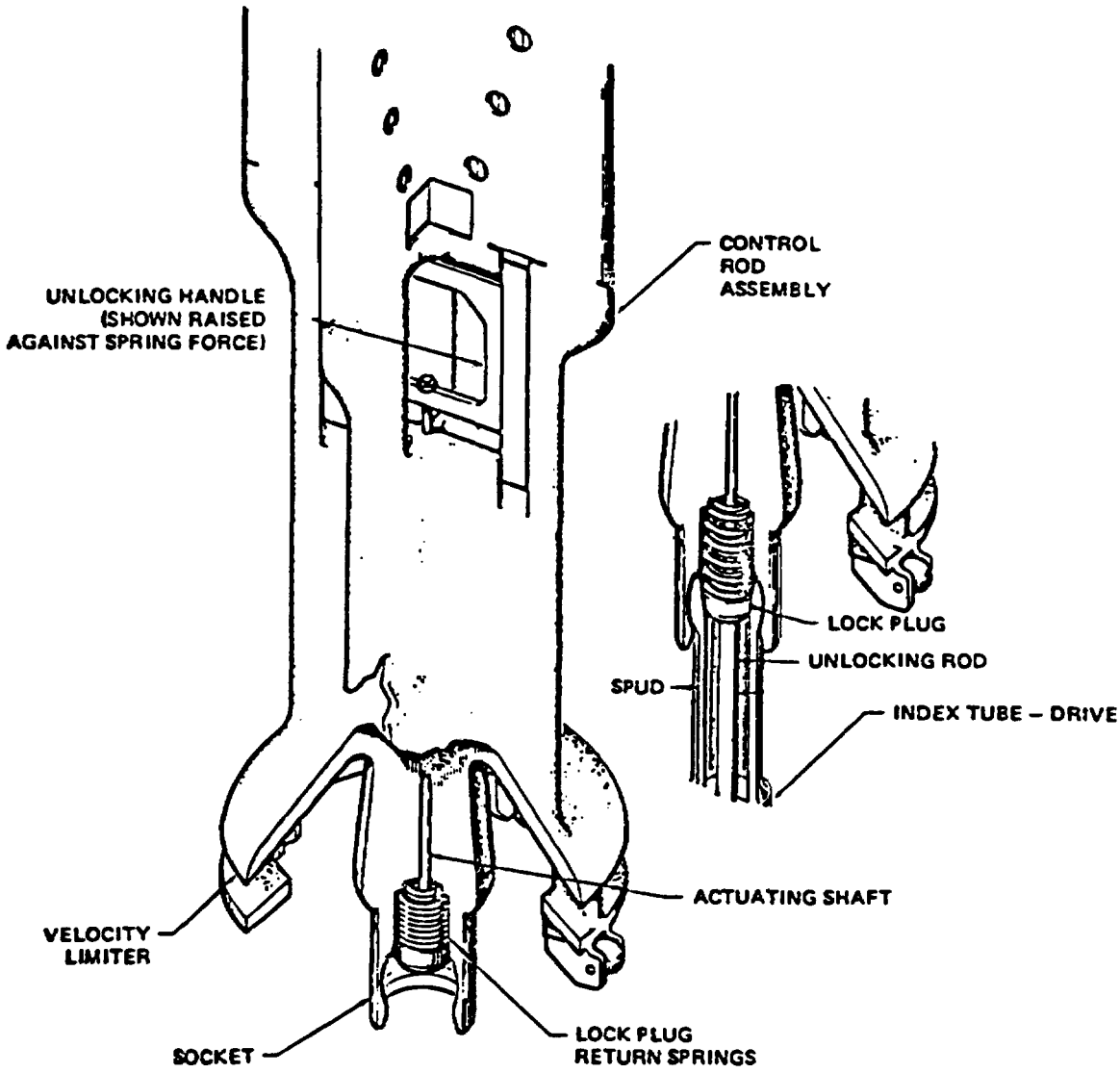

LIMERICK GENERATING STATION
UNITS 1 AND 2
UPDATED FINAL SAFETY ANALYSIS REPORT

CONTROL ROD TO CONTROL ROD DRIVE COUPLING

FIGURE 4.6-1

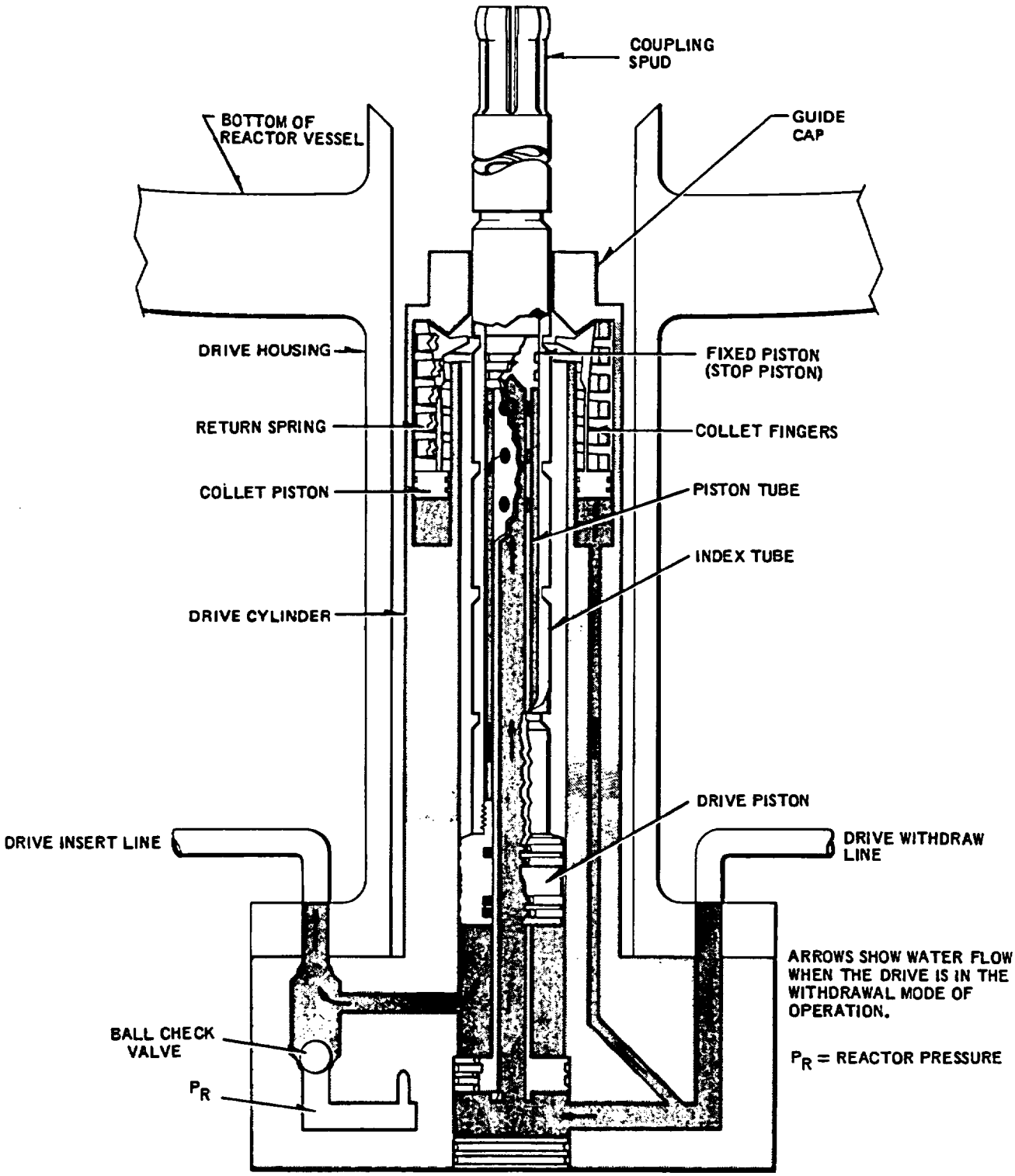

LIMERICK GENERATING STATION
UNITS 1 AND 2
UPDATED FINAL SAFETY ANALYSIS REPORT

CONTROL ROD DRIVE UNIT

FIGURE 4.6-2

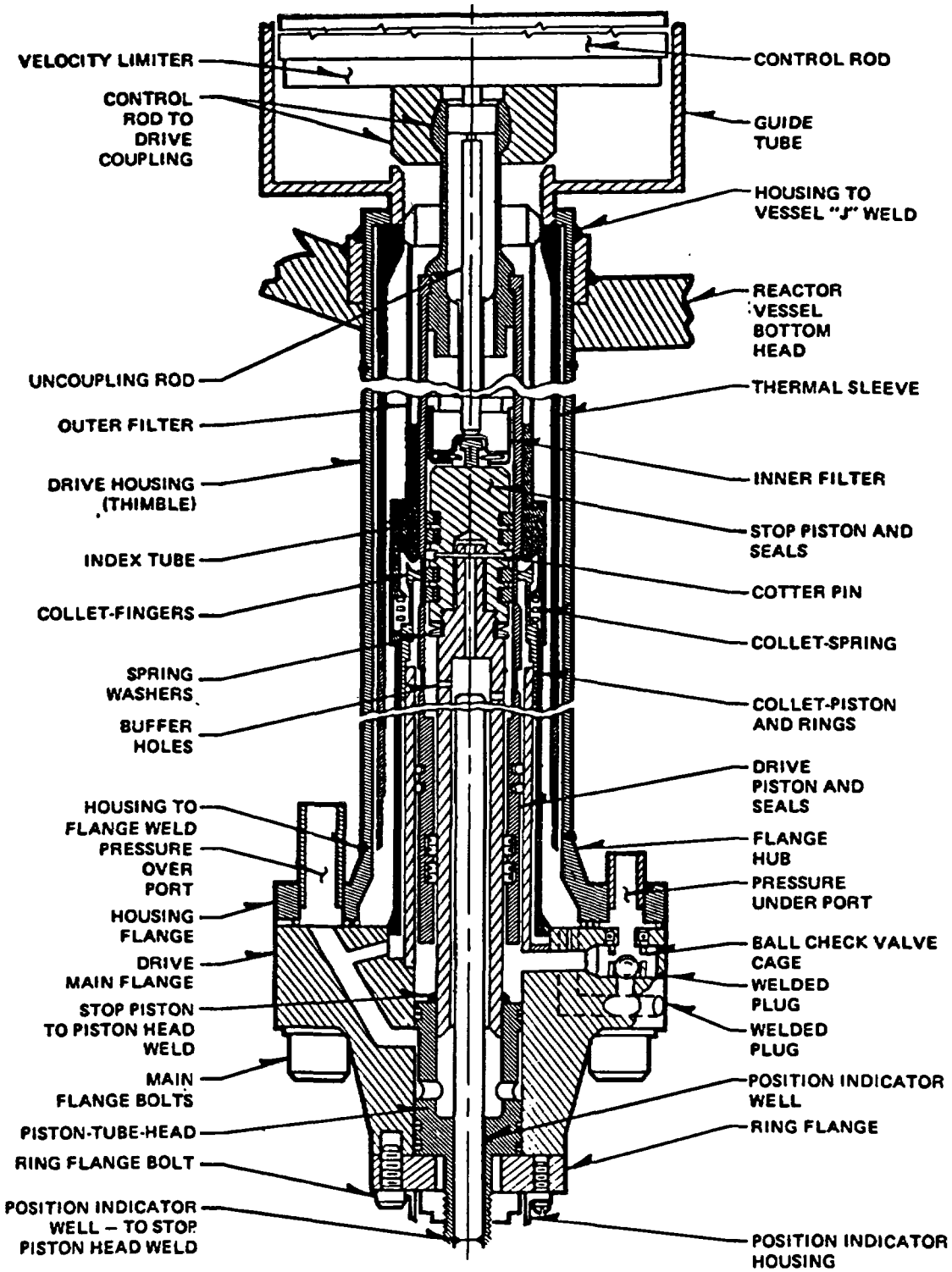

LIMERICK GENERATING STATION
UNITS 1 AND 2
UPDATED FINAL SAFETY ANALYSIS REPORT

CONTROL ROD DRIVE SCHEMATIC
BWR/4 & 5

FIGURE 4.6-3

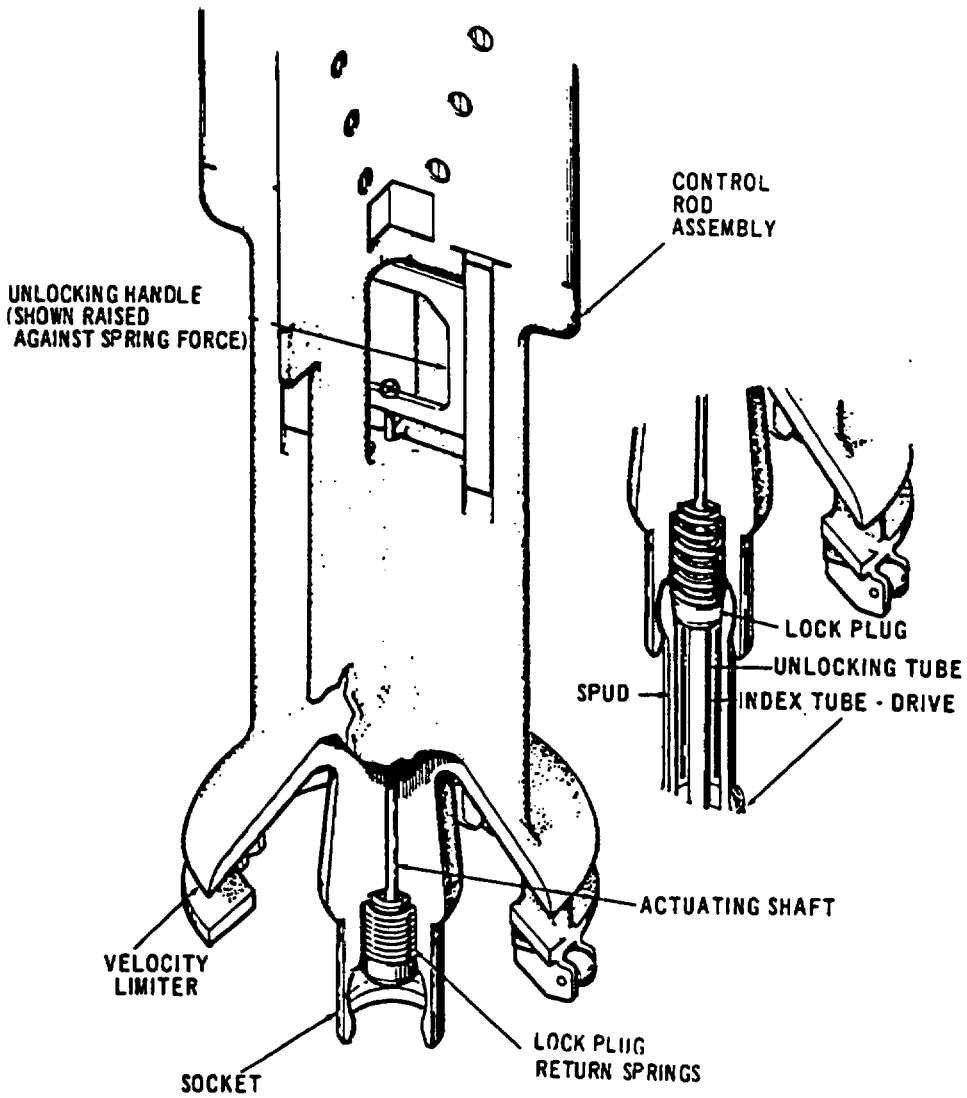

LA SALLE COUNTY STATION
UPDATED FINAL SAFETY ANALYSIS REPORT

FIGURE 4.6-1

CONTROL ROD TO CONTROL ROD
DRIVE COUPLING

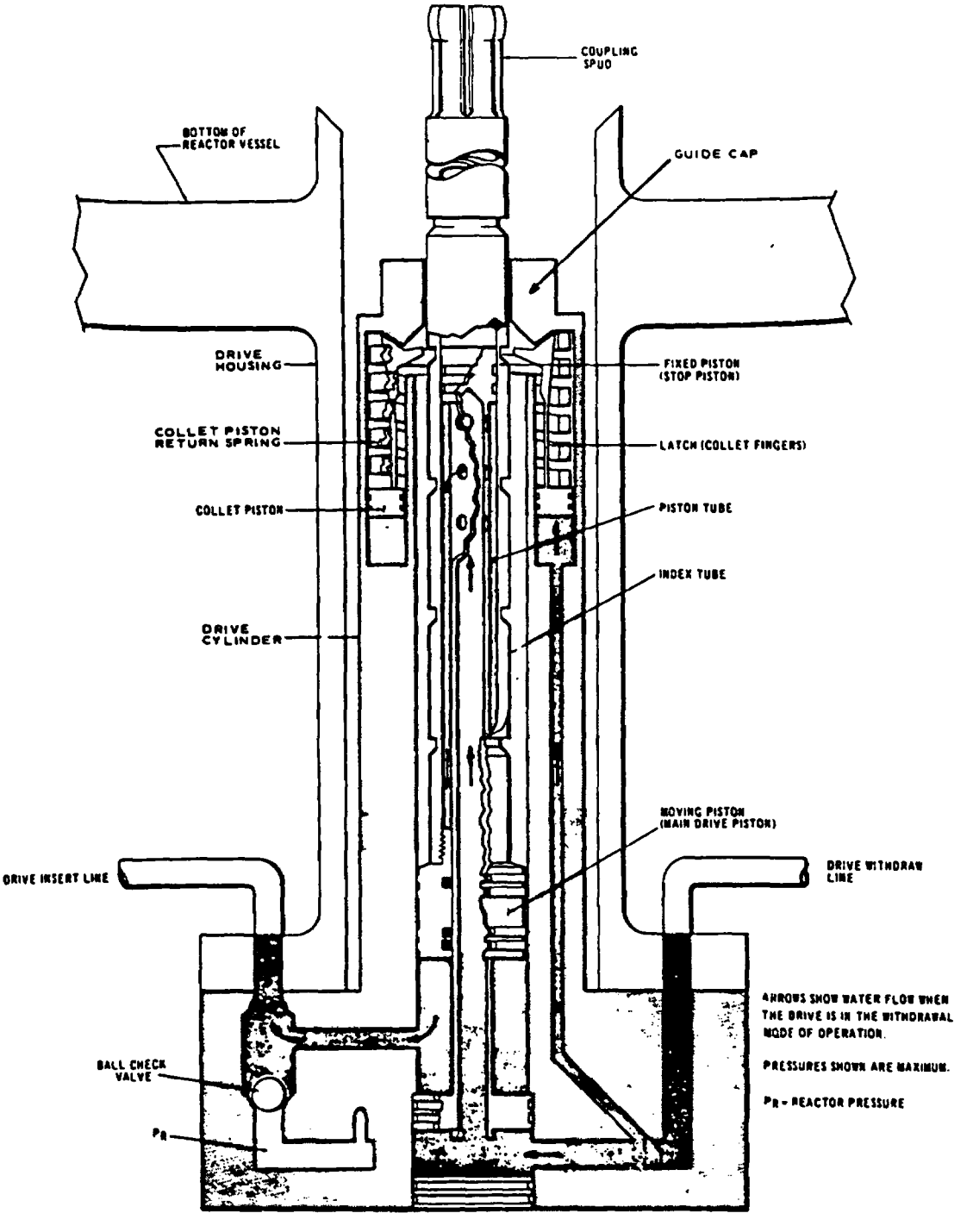

LA SALLE COUNTY STATION
UPDATED FINAL SAFETY ANALYSIS REPORT

FIGURE 4.6-2

CONTROL ROD DRIVE UNIT

REV. 0 - APRIL 1984

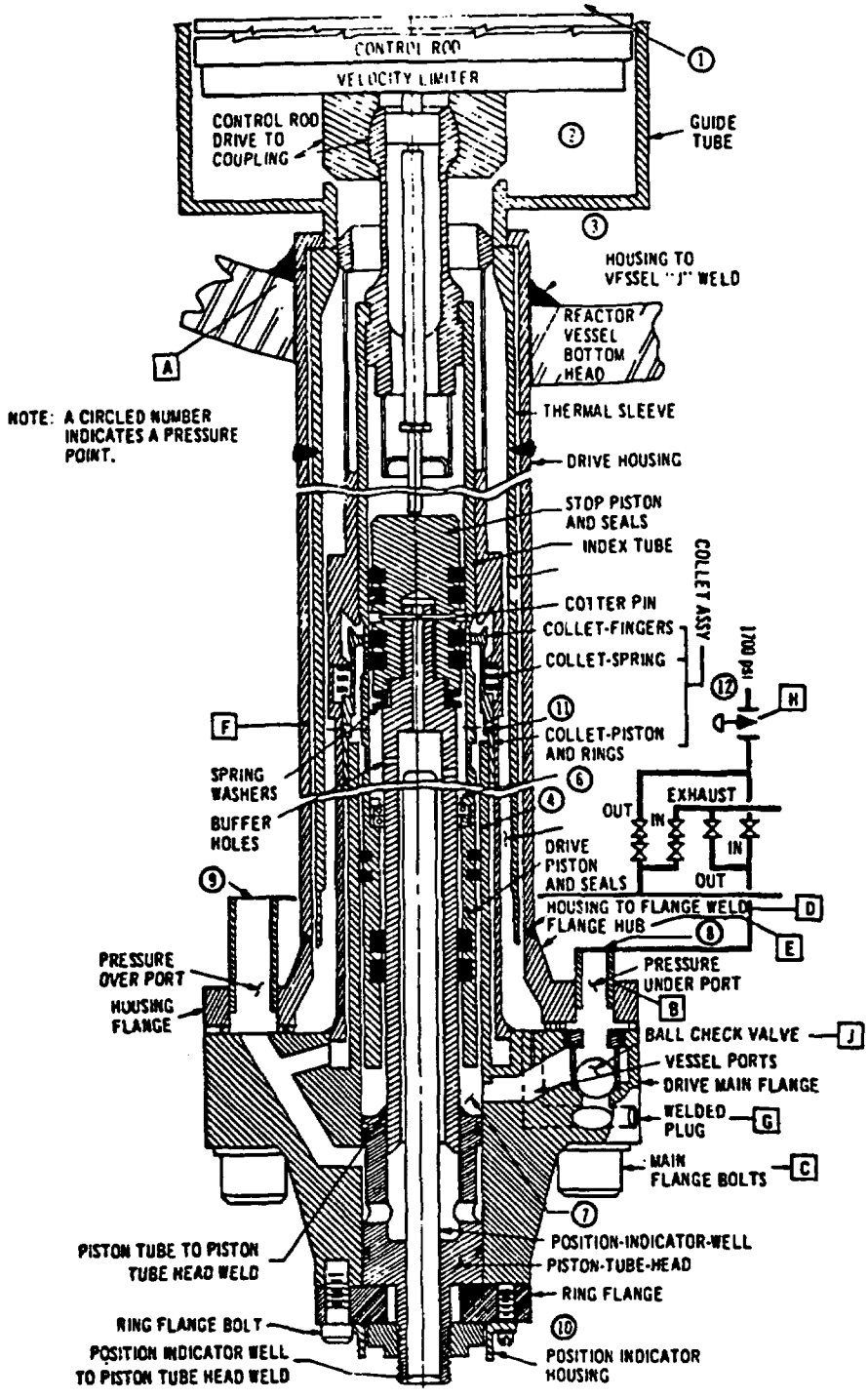

LA SALLE COUNTY STATION
UPDATED FINAL SAFETY ANALYSIS REPORT

FIGURE 4.6-3

CONTROL ROD DRIVE UNIT (SCHEMATIC)

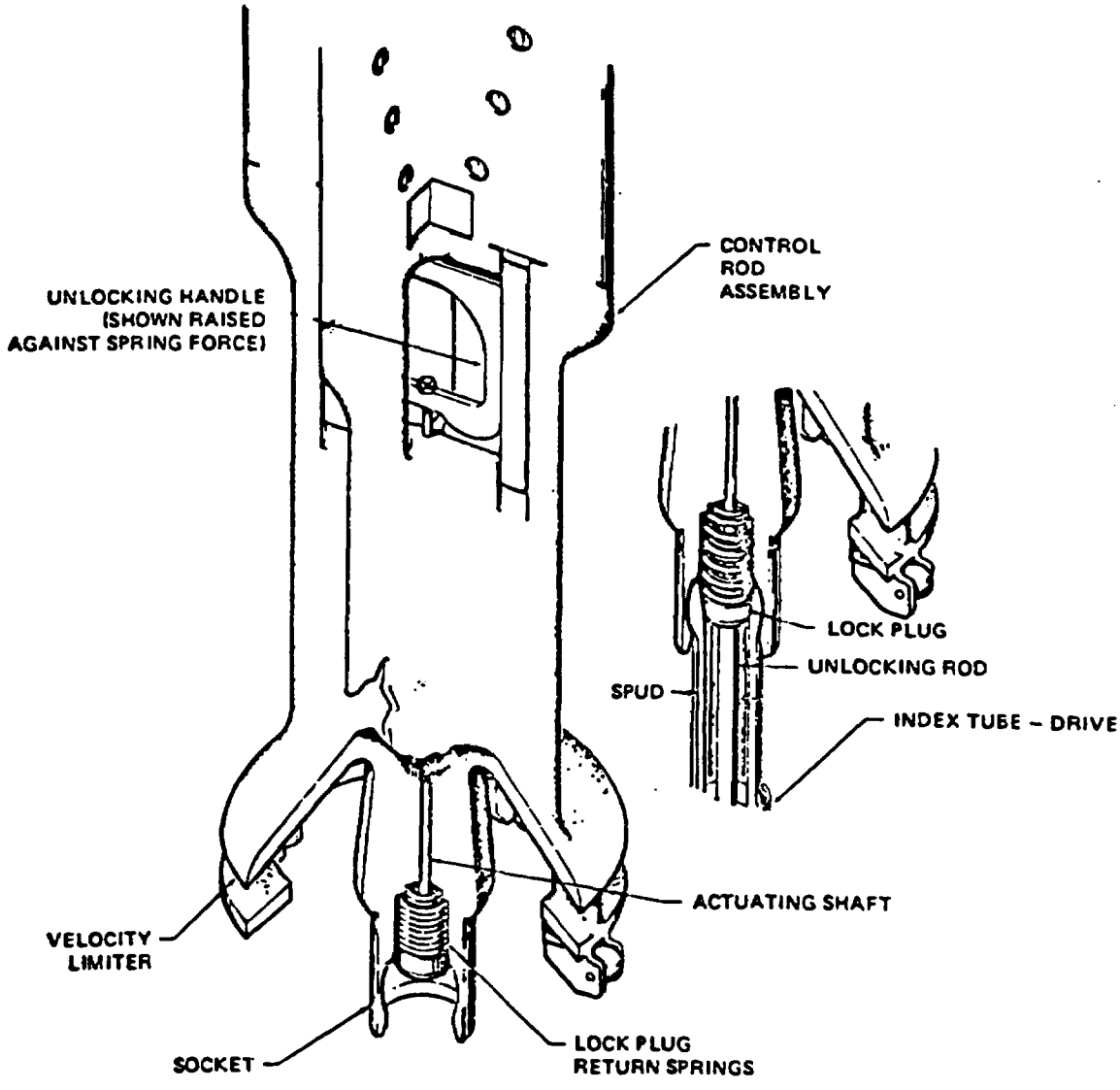

PERRY NUCLEAR POWER PLANT
THE CLEVELAND ELECTRIC
ILLUMINATING COMPANY

Control Rod to Control Rod Drive Coupling

Figure 4.6-1

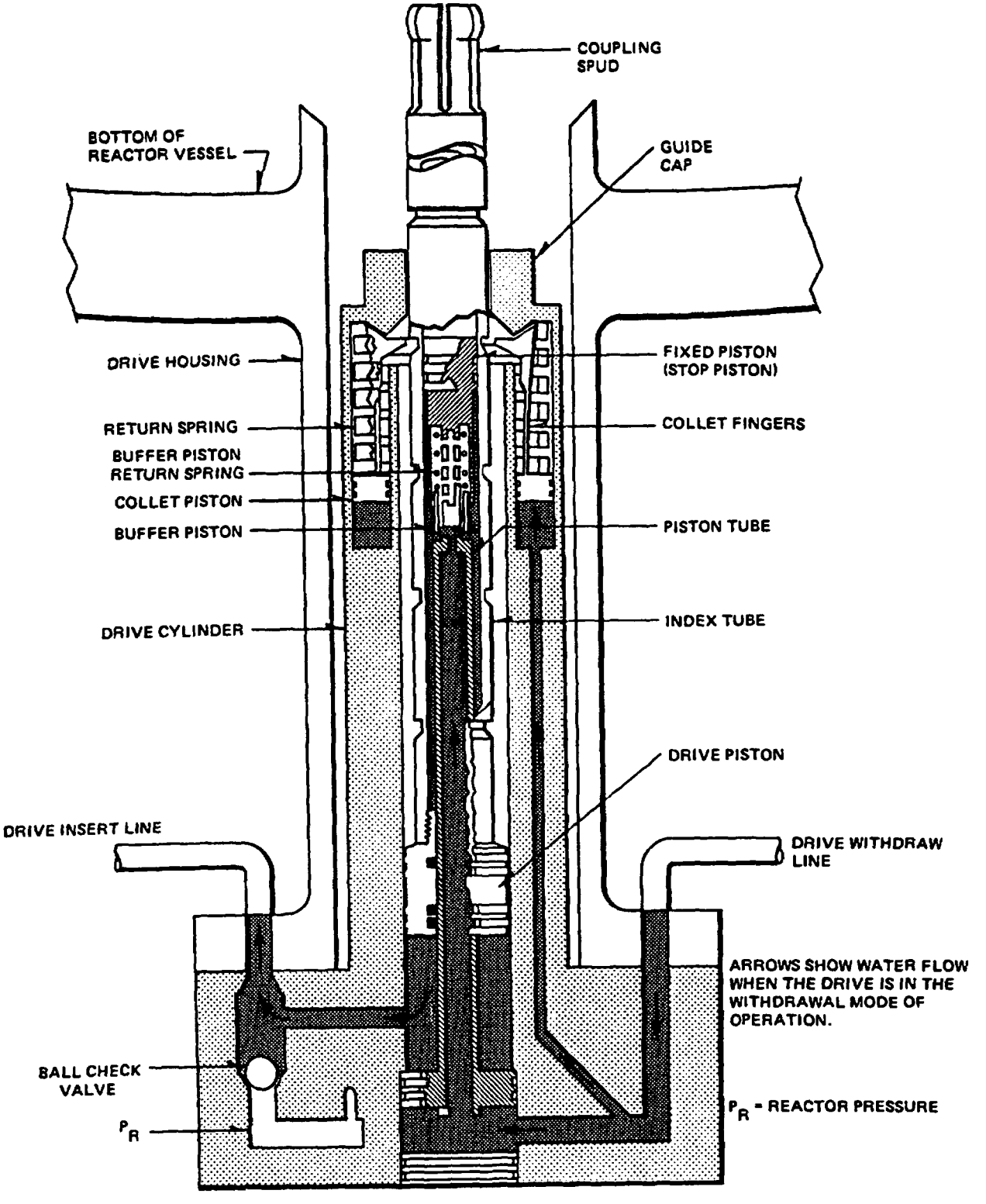

PERRY NUCLEAR POWER PLANT
THE CLEVELAND ELECTRIC ILLUMINATING COMPANY

Control Rod Drive Unit

Figure 4.6-2

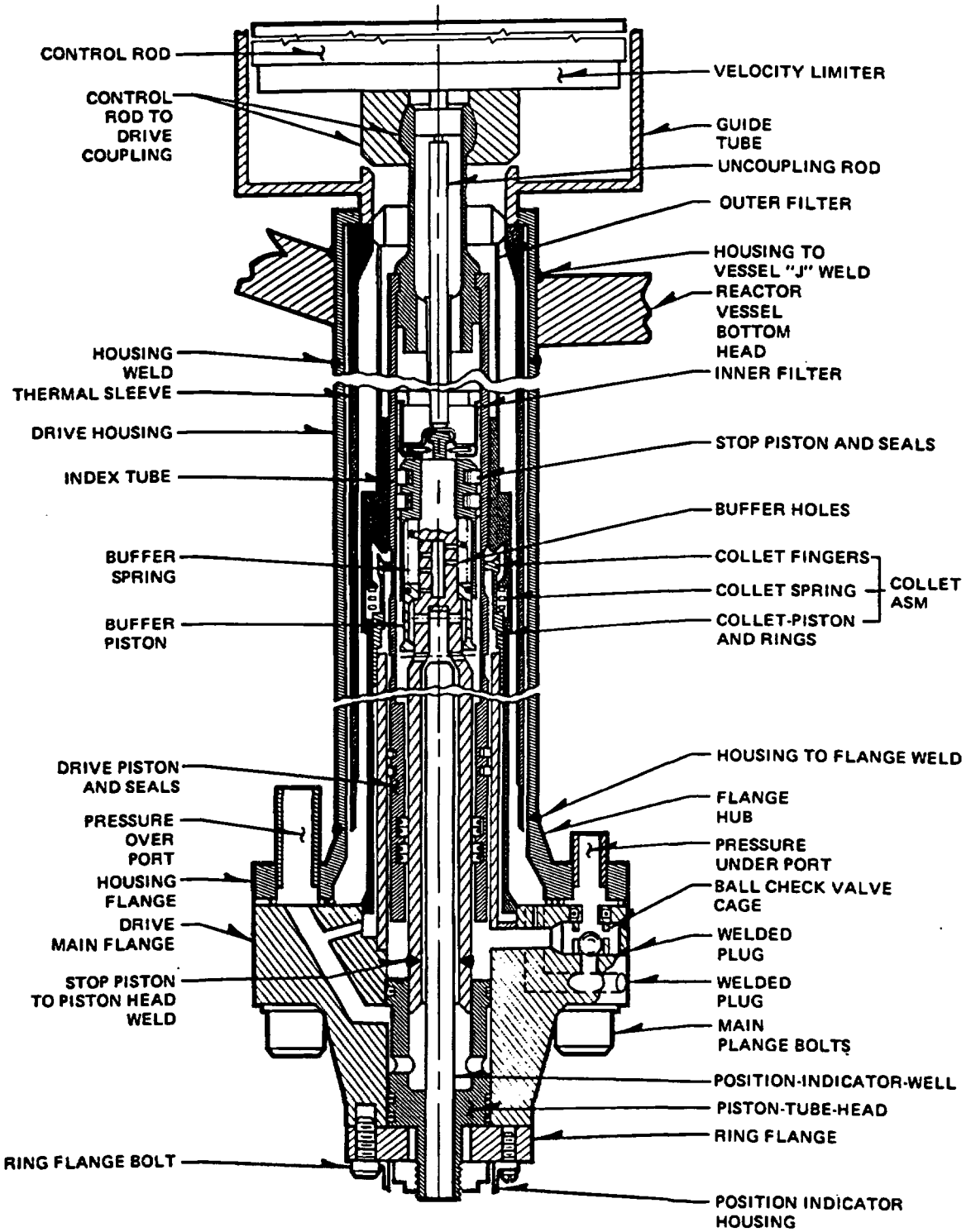

PERRY NUCLEAR POWER PLANT
THE CLEVELAND ELECTRIC ILLUMINATING COMPANY

Control Rod Drive Schematic

Figure 4.6-3

Responses to NRC Staff Requests For Additional Information On NEDO-33091

Attachment 2

UFSAR Pages Related to the Response to RAI 2

4.6.2.3.2 Control Rod Drives

4.6.2.3.2.1 Evaluation of Scram Time

The rod scram function of the CRD system provides the negative reactivity insertion required by safety design basis as stated in Section 4.6.1.1.1. The scram time shown in the description is adequate as shown by the transient analyses of Chapter 15.

4.6.2.3.2.2 Analysis of Malfunction Relating to Rod Withdrawal

There are no known single malfunctions that cause the unplanned withdrawal of even a single control rod. However, if multiple malfunctions are postulated, studies show that an unplanned rod withdrawal can occur at withdrawal speeds that vary with the combination of malfunctions postulated. In all cases the subsequent withdrawal speeds are less than that assumed in the rod-drop accident analysis as discussed in Chapter 15. Therefore, the physical and radiological consequences of such rod withdrawals are less than those analyzed in the rod-drop accident.

4.6.2.3.2.2.1 Drive Housing Failure at Attachment Weld

The bottom head of the reactor vessel has a penetration for each CRD location. A drive housing is raised into position inside each penetration and is fastened by welding. The drive is raised into the drive housing and bolted to a flange at the bottom of the housing. The housing material is seamless, Type 304 stainless steel pipe with a minimum tensile strength of 75,000 psi. The basic failure considered here is a complete circumferential crack through the housing wall at an elevation just below the J-weld.

Static loads on the housing wall include the weight of the drive and the control rod, the weight of the housing below the J-weld, and the reactor pressure acting on the 6 inch diameter cross-sectional area of the housing and the drive. Dynamic loading results from the reaction force during drive operation.

If the housing were to fail as described, the following sequence of events is foreseen:

a. The housing would separate from the reactor vessel.

b. The CRD and housing would be blown downward against the support structure, by reactor pressure acting on the cross-sectional area of the housing and the drive.

c. The downward motion of the drive and associated parts would be determined by the gap between the bottom of the drive and the support structure, and by the deflection of the support structure under the load.

   1. In the current design, maximum deflection is approximately 3 inches.

   2. If the collet remains latched, no further control rod ejection would occur (Reference 4.6-1); the housing would not drop far enough to clear the reactor vessel penetration.

d. Reactor water would leak at a rate of approximately 180 gpm, through the 0.03 inch diameter clearance between the housing OD and reactor vessel penetration ID.

If the basic housing failure were to occur while the control rod is being withdrawn (this is a small fraction of the total drive operating time) and if the collet were to stay unlatched, the following sequence of events is foreseen:

a. The housing would separate from the reactor vessel.

b. The control rod, CRD, and housing would be blown downward against the CRD housing support.

c. Calculations indicate that the steady-state rod withdrawal velocity would be 0.3 ft/sec.

d. During withdrawal, pressure under the collet piston would be approximately 250 psi greater than the pressure over it; therefore, the collet would be held in the unlatched position until driving pressure was removed from the pressure-over port.

4.6.2.3.2.2.2 Rupture of Hydraulic Line(s) to Drive Housing Flange

There are three types of possible rupture of hydraulic lines to the drive housing flange: pressure-under (insert) line break; pressure-over (withdrawn) line break; and coincident breakage of both of these lines.

4.6.2.3.2.2.2.1 Pressure-Under (Insert) Line Break

For the case of a pressure-under (insert) line break, a partial or complete circumferential opening is postulated at or near the point where the line enters the housing flange. Failure is more likely to occur after another basic failure, wherein the drive housing or housing flange separates from the reactor vessel. Failure of the housing, however, does not necessarily lead directly to failure of the hydraulic lines.

If the pressure-under (insert) line were to fail and if the collet were latched, no control rod withdrawal would occur. There would be no pressure differential across the collet piston and, therefore, no tendency to unlatch the collet. Consequently, the associated control rod could not be withdrawn, but if reactor pressure is greater than 600 psig, it will insert on a scram signal.

The ball check valve is designed to seal off a broken pressure-under line by using reactor pressure to shift the check ball to its upper seat. If the ball check valve were prevented from seating, reactor water would leak to the reactor enclosure or containment. Because of the broken line, cooling water could not be supplied to the drive involved. Loss of cooling water would cause no immediate damage to the drive. However, prolonged exposure of the drive to temperatures at or near reactor temperature could lead to deterioration of material in the seals. High temperature would be indicated to the operator by the thermocouple in the position indicator probe, by high cooling water flow, and by operation of the containment sump pump.

If the basic line failure were to occur while the control rod is being withdrawn, the hydraulic force would not be sufficient to hold the collet open, and spring force normally would cause the collet to latch and stop rod withdrawal. However, if the collet were to remain open, calculations indicate that the steady-state control rod withdrawal velocity would be 2 ft/sec.

4.6.2.3.2.2.2.2 Pressure-Over (Withdrawn) Line Break

The case of the pressure-over (withdrawn) line breakage considers the complete breakage of the line at or near the point where it enters the housing flange. If the line were to break, pressure over the drive piston would drop from reactor pressure to atmospheric pressure. Any significant reactor pressure (approximately 600 psig or greater) would act on the bottom of the drive piston and fully insert the drive. Insertion would occur regardless of the operational mode at the time of the failure. After full insertion, reactor water would leak past the stop piston

seals. This leakage would exhaust to the atmosphere through the broken pressure-over line. The leakage rate at 1000 psi reactor pressure is estimated to be 1-3 gpm; however, with the Graphitar seals of the stop piston removed, the leakage rate could be as high as 10 gpm, based on experimental measurements. If the reactor were hot, drive temperature would increase. This situation would be indicated to the reactor operator by the drift alarm, by the fully inserted drive, by a high drive temperature (annunciated in the control room), and by operation of the drywell sump pump.

4.6.2.3.2.2.2.3 Simultaneous Breakage of the Pressure-Over (Withdrawn) Pressure-Under (Insert) Lines

For the simultaneous breakage of the pressure-over (withdrawn) and pressure-under (insert) lines, pressures above and below the drive piston would drop to zero, and the ball check valve would close the broken pressure-under line. Reactor water would flow from the annulus outside the drive, through the vessel ports, and to the space below the drive piston. As in the case of pressure-over line breakage, the drive would then insert (at reactor pressure approximately 600 psi or greater) at a speed dependent on reactor pressure. Full insertion would occur regardless of the operational mode at the time of failure. Reactor water would leak past the drive seals and out the broken pressure-over line to the reactor enclosure or containment, as described above. Drive temperature would increase. Indication in the control room would include the drift alarm, the fully inserted drive, the high drive temperature annunciated in the control room, and the operation of the drywell sump pump.

4.6.2.3.2.2.3 All Drive Flange Bolts Fail in Tension

Each CRD is bolted to a flange at the bottom of a drive housing. The flange is welded to the drive housing. Bolts are made of AISI-4140 steel or AISI-4340 steel, with a minimum tensile strength of 125,000 psi. Each bolt has an allowable load capacity of at least 15,200 pounds. Capacity of the 8 bolts is at least 121,600 pounds. As a result of the reactor design pressure of 1250 psig, the major load on all 8 bolts is 30,400 pounds.

If a progressive or simultaneous failure of all bolts occurs, the drive separates from the housing. The control rod and the drive would be blown downward against the support structure. Impact velocity and support structure loading would be slightly less than that for drive housing failure, because reactor pressure would act on the drive's cross-sectional area only and the housing would remain attached to the reactor vessel. The drive would be isolated

from the cooling water supply. Reactor water would flow downward past the velocity limiter piston, through the large drive filter, and into the annular space between the thermal sleeve and the drive. For worst case leakage calculations, the large filter is assumed to be deformed or swept out of the way so it would offer no significant flow restriction. At a point near the top of the annulus, where pressure would have dropped to 350 psi, the water would flash to steam and cause choke flow conditions. Steam would flow down the annulus and out the space between the housing and the drive flanges to the drywell. Steam formation would limit the leakage rate to approximately 840 gpm.

If the collet were latched, control rod ejection would be limited to the distance the drive can drop before coming to rest on the support structure. There would be no tendency for the collet to unlatch, because pressure below the collet piston would drop to zero. Pressure forces, in fact, exert 1435 pounds to hold the collet in the latched position.

If the bolts failed during control rod withdrawal, pressure below the collet piston would drop to zero. The collet, with 1650 pounds return force, would latch and stop rod withdrawal.

4.6.2.3.2.2.4 Weld Joining Flange-to-Housing Failure in Tension

The failure considered is a crack in or near the weld that joins the flange to the housing. This crack extends through the wall and completely around the housing. The flange material is forged, Type 304 stainless steel, with a minimum tensile strength of 75,000 psi. The housing material is seamless, Type 304 stainless steel pipe, with a minimum tensile strength of 75,000 psi. The conventional, full penetration weld of Type 308 stainless steel has a minimum tensile strength approximately the same as that for the parent metal. The design pressure and temperature are 1250 psig and 575°F. Reactor pressure acting on the cross-sectional area of the drive; the weight of the control rod, drive, and flange; and the dynamic reaction force during drive operation result in a maximum tensile stress at the weld of approximately 6000 psi.

If the basic flange-to-housing joint failure occurred, the flange and the attached drive would be blown downward against the support structure. The support structure loading would be slightly less than that for drive housing failure, because reactor pressure would act only on the drive cross-sectional area. Lack of differential pressure across the collet piston would cause the collet to remain latched and limit control rod motion to approximately 3 inches. Downward drive movement would be small; therefore, most of the drive would remain inside the housing. The pressure-under and pressure-over lines are flexible enough to withstand the small

displacement and remain attached to the flange. Reactor water would follow the same leakage path described above for the flange bolt failure, except that exit to the drywell would be through the gap between the lower end of the housing and the top of the flange. Water would flash to steam in the annulus surrounding the drive. The leakage rate would be approximately 840 gpm.

If the basic failure were to occur during control rod withdrawal (a small fraction of the total operating time) and if the collet were held unlatched, the flange would separate from the housing. The drive and flange would be blown downward against the support structure. The calculated steady-state rod withdrawal velocity would be 0.13 ft/sec. Because pressure-under and pressure-over lines remain intact, driving water pressure would continue to the drive, and the normal exhaust line restriction would exist. The pressure below the velocity limiter piston would drop below normal as a result of leakage from the gap between the housing and the flange. This differential pressure across the velocity limiter piston would result in a net downward force of approximately 70 pounds. Leakage out of the housing would greatly reduce the pressure in the annulus surrounding the drive. Thus, the net downward force on the drive piston would be less than normal. The overall effect of these events would be to reduce rod withdrawal to approximately one-half of normal speed. With a 560-psi differential across the collet piston, the collet would remain unlatched; however, it should relatch as soon as the drive signal is removed.

4.6.2.3.2.2.5 Housing Wall Ruptures

This failure is a vertical split in the drive housing wall just below the bottom head of the reactor vessel. The flow area of the hole is considered equivalent to the annular area between the drive and the thermal sleeve. Thus, flow through this annular area, rather than flow through the hole in the housing, would govern leakage flow. The housing is made of Type 304 stainless steel seamless pipe, with a minimum tensile strength of 75,000 psi. The maximum hoop stress of 11,900 psi results primarily from the reactor design pressure (1250 psig) acting on the inside of the housing.

If such a rupture were to occur, reactor water would flash to steam, and leak through the hole in the housing to the drywell at approximately 1030 gpm. Choke flow conditions would exist, as described previously for the flange bolt failure. However, leakage flow would be greater because flow resistance would be less, that is, the leaking water and steam would not have to flow down the length of the housing to reach the drywell. A critical pressure of 350 psi causes the water to flash to steam.

There would be no pressure differential acting across the collet piston to unlatch the collet; but the drive would insert as a result of loss of pressure in the drive housing causing a pressure drop in the space above the drive piston.

If this failure occurred during control rod withdrawal, drive withdrawal would stop, but the collet would remain unlatched. The drive would be stopped by a reduction of the net downward force action on the drive line. The net force reduction would occur when the leakage flow of 1030 gpm reduces the pressure in the annulus outside the drive to approximately 540 psig, thereby reducing the pressure acting on top of the drive piston to the same value. A pressure differential of approximately 710 psi would exist across the collet piston and holds the collet unlatched as long as the operator holds the withdraw signal.

4.6.2.3.2.2.6 Flange Plug Blows Out

To connect the vessel ports with the bottom of the ball check valve, a hole of 0.75 inch diameter is drilled in the drive flange of this hole is sealed with a plug of 0.812 inch diameter and 0.25 inch thickness. A full penetration, Type 308 stainless steel weld holds the plug in place. The postulated failure is a full circumferential crack in this weld and subsequent blowout of the plug.

If the weld were to fail, the plug were to blow out, and the collet remained latched, there would be no control rod motion. There would be no pressure differential acting across the collet piston to unlatch the collet. Reactor water would leak past the velocity limiter piston, down the annulus between the drive and the thermal sleeve, through the vessel ports and drilled passage, and out the open plug hole to the drywell at approximately 320 gpm. Leakage calculations assume only liquid flows from the flange. Actually, hot reactor water would flash to steam, and choke flow conditions would exist. Thus, the expected leakage rate would be lower than the calculated value. Drive temperature would increase and initiate an alarm in the control room.

If this failure were to occur during control rod withdrawal and if the collet were to stay unlatched, calculations indicate that control rod withdrawal speed would be approximately 0.24 ft/sec. Leakage from the open plug hole in the flange would cause reactor water to flow downward past the velocity limiter piston. A small differential pressure across the piston would result in an insignificant driving force of approximately 10 pounds, tending to increase withdraw velocity.

A pressure differential of 295 psi across the collet piston would hold the collet unlatched as long as the driving signal was maintained.

Flow resistance of the exhaust path from the drive would be normal because the ball check valve would be seated at the lower end of its travel by pressure under the drive piston.

4.6.2.3.2.2.7 Ball Check Valve Plug Blows Out

As a means of access for machining the ball check valve cavity, a 1.25 inch diameter hole has been drilled in the flange forging. This hole is sealed with a plug with a 1.31 inch diameter and 0.38 inch thickness. A full penetration weld, utilizing Type 308 stainless steel filler, holds the plug in place. The failure postulated is a circumferential crack in this weld leading to a blowout of the plug.

If the plug were to blow out while the drive was latched, there would be no control rod motion. No pressure differential would exist across the collet piston to unlatch the collet. As in the previous failure, reactor water would flow past the velocity limiter, down the annulus between the drive and thermal sleeve, through the vessel ports and drilled passage, through the ball check valve cage and out the open plug hole to the drywell. The leakage calculations indicate that the flow rate would be 350 gpm. This calculation assumes liquid flow, but flashing of the hot reactor water to steam would reduce this rate to a lower value. Drive temperature would rapidly increase and initiate an alarm in the control room.

If the plug failure were to occur during control rod withdrawal, (it would not be possible to unlatch the drive after such a failure) the collet would relatch at the first locking groove. If the collet were to stick, calculations indicate the control rod withdrawal speed would be 11.8 ft/sec. There would be a large retarding force exerted by the velocity limiter due to a 35 psi pressure differential across the velocity limiter piston.

4.6.2.3.2.2.8 Drive/Cooling Water Pressure Control Valve Closure (Reactor Pressure, 0 psig)

The pressure to move a drive is generated by the pressure drop of practically the full system flow through the drive/cooling water pressure control valve. This valve is either a MOV or a standby manual valve; either one is adjusted to a fixed opening. The normal pressure drop across this valve develops a pressure 260 psi in excess of reactor pressure.

If the flow through the drive/cooling water pressure control valve were to be stopped, as by a valve closure or flow blockage, the drive pressure would increase to the shutoff pressure of the supply pump. The occurrence of this condition during withdrawal of a drive at zero vessel pressure will result in a drive pressure increase from 260 psig to no more than 1750 psig. Calculations indicate that the drive accelerates from 3 in/sec to approximately 6.5 in/sec. A pressure differential of 1670 psi across the collet piston would hold the collet unlatched. Flow would be upward, past the velocity limiter piston, but retarding force would be negligible. Rod movement would stop as soon as the driving signal was removed.

4.6.2.3.2.2.9 Ball Check Valve Fails to Close Passage to Vessel Ports

Should the ball check valve sealing the passage to the vessel ports be dislodged and prevented from reseating following the insert portion of a drive withdrawal sequence, water below the drive piston would return to the reactor through the vessel ports and the annulus between the drive and the housing rather than through the speed control valve. Because the flow resistance of this return path would be lower than normal, the calculated withdrawal speed would be 2 ft/sec. During withdrawal, differential pressure across the collet piston would be approximately 40 psi. Therefore, the collet would tend to latch and would have to stick open before continuous withdrawal at 2 ft/sec could occur. Water would flow upward past the velocity limiter piston, generating a small retarding force of approximately 120 pounds.

4.6.2.3.2.2.10 Hydraulic Control Unit Valve Failures

Various failures of the valves in the HCU can be postulated, but none could produce differential pressures approaching those described in the preceding paragraphs, and none alone could produce a high velocity withdrawal. Leakage through either one or both of the scram valves produces a pressure that tends to insert the control rod rather than to withdraw it. If the pressure in the SDV should exceed reactor pressure following a scram, a check valve in the line to the scram discharge header prevents this pressure from operating the drive mechanisms.

4.6.2.3.2.2.11 Collet Fingers Fail to Latch

The failure is presumed to occur when the drive withdraw signal is removed. If the collet fails to latch, the drive continues to withdraw at a fraction of the normal speed. This assumption is made because there is no known means for the collet fingers to become unlocked without some initiating signal. Because the collet fingers will not cam open under a load, accidental application of a down signal does not unlock them. (The drive must be given a short insert signal to unload the fingers and cam them open before the collet can be driven to the unlock position.) If the drive withdrawal valve fails to close following a rod withdrawal, the collet would remain open and the drive would continue to move at a reduced speed.

4.6.2.3.2.2.12 Withdrawal Speed Control Valve Failure

Normal withdrawal speed is determined by differential pressures in the drive and is set for a nominal value of 3 in/sec. Withdrawal speed is maintained by the pressure regulating system and is independent of reactor vessel pressure. Tests show that accidental opening of the speed control valve to the fully open position produces a velocity of approximately 6 in/sec.

The CRD system prevents unplanned rod withdrawal, and it has been shown above that only multiple failures in a drive unit and in its control unit could cause an unplanned rod withdrawal.

4.6.2.3.2.3 Scram Reliability

High scram reliability is the result of a number of features of the CRD system. For example:

a. Two reliable sources of scram energy are used to insert each control rod: individual accumulators at low reactor pressure, and the reactor vessel pressure itself at power.

b. Each drive mechanism has its own scram valves and two scram pilot valves, so only one drive can be affected if a scram valve fails to open. Both pilot valves must be de-energized to initiate a scram.

c. The RPS and the HCUs are designed so that the scram signal and mode of operation override all others.

d. The collet assembly and index tube are designed so they do not restrain or prevent control rod insertion during scram.

e. The SDV is monitored for accumulated water and the reactor scrams before the volume is reduced to a point that could interfere with a scram.

4.6.2.3.2.4 Control Rod Support and Operation

As described above, each control rod is independently supported and controlled as required by safety design bases.

4.6.2.3.3 Control Rod Drive Housing Supports

Downward travel of the CRD housing and its control rod following the postulated housing failure equals the sum of these distances: the compression of the disc springs under dynamic loading, and the initial gap between the grid and the bottom contact surface of the CRD flange. If the reactor were cold and pressurized, the downward motion of the control rod would be limited to the spring compression (approximately 2 inches) plus a gap of approximately 3/4" ± 1/4". If the reactor were hot and pressurized, the gap would be approximately 1/2" ± 1/4" and the spring compression would be slightly less than in the cold condition. In either case, the control rod movement following a housing failure is substantially limited below one drive "notch" movement (6 inches). Sudden withdrawal of any control rod, through a distance of one drive notch at any position in the core, does not produce a transient sufficient to damage any radioactive material barrier.

The CRD housing supports are in place during power operation and when the nuclear system is pressurized. If a control rod is ejected during shutdown, the reactor remains subcritical because it is designed to remain subcritical with any one control rod fully withdrawn at any time.

At plant operating temperature, a gap of approximately 1/2" ± 1/4" exists between the CRD housing and the supports. At lower temperatures the gap is greater. Because the supports do not contact any of the CRD housing, except during the postulated accident condition, vertical contact stresses are prevented. Inspection and testing are discussed in Section 4.6.3.2.

4.6.2.3.1.9 Evaluation of Control Rod Velocity Limiter

The control rod velocity limiter limits the free fall velocity of the control rod to a value that cannot result in nuclear system process barrier damage. This velocity is evaluated by the rod drop accident analysis in Chapter 15.

4.6.2.3.2 Control Rod Drives

4.6.2.3.2.1 Evaluation of Scram Time

•→10

The rod scram function of the CRD system provides the negative reactivity insertion required by safety design basis No. 1 in Section 4.6.1.1.1.1. The scram time shown in the description (Section 4.6.1.1.2.5.3) is adequate as shown by the transient analyses of Chapter 15.

10←•

4.6.2.3.2.2 Analysis of Malfunction Relating to Rod Withdrawal

There are no known single malfunctions that cause the unplanned withdrawal of even a single control rod. However, if multiple malfunctions are postulated, studies show that an unplanned rod withdrawal can occur at withdrawal speeds that vary with the combination of malfunctions postulated. In all cases the subsequent withdrawal speeds are less than those assumed in the rod drop accident analysis as discussed in Chapter 15. Therefore, the physical and radiological consequences of such rod withdrawals are less than those analyzed in the rod drop accident.

•→14

The calculated values shown in the following postulated malfunction events may increase slightly (up to approximately 5% to 10%) when operating at a power uprate reactor pressure condition.

14←•

4.6.2.3.2.2.1 Drive Housing Fails at Attachment Weld

The bottom head of the reactor vessel has a penetration for each CRD location. A drive housing is raised into position inside each penetration and fastened by welding. The drive is raised into the drive housing and bolted to a flange at the bottom of the housing.

The CRD housing material at the vessel penetration is seamless, Type Inconel 600 tubing with a minimum tensile strength of 80,000 psi, and Type 304 stainless steel pipe below the vessel with a minimum strength of 75,000 psi. The basic failure considered here is a complete circumferential crack through the housing wall at an elevation just below the J-weld.

Static loads on the housing wall include the weight of the drive and the control rod, the weight of the housing below the J-weld, and the reactor pressure acting on the 6-in diameter cross-sectional area of the housing and the drive.

Dynamic loading results from the reaction force during drive operation.

If the housing were to fail as described, the following sequence of events is foreseen. The housing would separate from the vessel. The CRD and housing would be blown downward against the support structure by reactor pressure acting on the cross-sectional area of the housing and the drive. The downward motion of the drive and associated parts would be determined by the gap between the bottom of the drive and the support structure and by the deflection of the support structure under load. In the current design, maximum deflection is approximately 3 in. If the collet were to remain latched, no further control rod ejection would occur[1], the housing would not drop far enough to clear the vessel penetration, and reactor water would leak at a rate of approximately 180 gpm through the 0.03-in diametral clearance between the housing and the vessel penetration.

If the basic housing failure were to occur while the control rod is being withdrawn (this is a small fraction of the total drive operating time) and if the collet were to stay unlatched, the following sequence of events is foreseen. The housing would separate from the vessel and the drive and housing would be blown downward against the CRD housing support. Calculations indicate that the steady-state rod withdrawal velocity would be 0.3 ft/sec. During withdrawal, pressure under the collet piston would be approximately 250 psi greater than the pressure over it. Therefore, the collet would be held in the unlatched position until driving pressure was removed from the pressure-over port.

4.6.2.3.2.2.2 Rupture of Hydraulic Line(s) to Drive Housing Flange

There are three types of possible rupture of hydraulic lines to the drive housing flange: 1) pressure-under (insert) line break, 2) pressure-over (withdrawn) line break, and 3) coincident breakage of both these lines.

4.6.2.3.2.2.2.1 Pressure-Under (Insert) Line Break

For the case of a pressure-under (insert) line break, a partial or complete circumferential opening is postulated at or near the point where the line enters the housing flange. Failure is more likely to occur after another basic failure wherein the drive housing or housing flange separates from the reactor vessel. Failure of the housing, however, does not necessarily lead directly to failure of the hydraulic lines.

If the pressure-under (insert) line were to fail and if the collet were latched, no control rod withdrawal would occur. There would be no pressure differential across the collet piston and, therefore, no tendency to unlatch the collet. Consequently, the associated control rod could not be withdrawn, but if reactor pressure is greater than 600 psig, it will insert on a scram signal.

The ball check valve is designed to seal off a broken pressure-under line by using reactor pressure to shift the check ball to its upper seat. If the ball check valve were prevented from seating, reactor water would leak to the containment. Because of the broken line, cooling water could not be supplied to the drive involved. Loss of cooling water would cause no immediate damage to the drive. However, prolonged exposure of the drive to temperatures at or near reactor temperature could lead to deterioration of material in the seals. High temperature would be indicated to the operator by the thermocouple in the position indicator probe. A second indication would be high cooling water flow.

If the basic line failure were to occur while the control rod is being withdrawn the hydraulic force would not be sufficient to hold the collet open, and spring force normally would cause the collet to latch and stop rod withdrawal. However, if the collet were to remain open, calculations indicate that the steady-state control rod withdrawal velocity would be 2 ft/sec.

4.6.2.3.2.2.2.2 Pressure-Over (Withdrawn) Line Break

The case of the pressure-over (withdrawn) line breakage considers the complete breakage of the line at or near the point where it enters the housing flange. If the line were to break, pressure over the drive piston would drop from reactor pressure to atmospheric pressure. Any significant reactor pressure (approximately 600 psig or greater) would act on the bottom of the drive piston and fully insert the drive. Insertion would occur regardless of the operational mode at the time of the failure. After full insertion, reactor water would leak past the stop piston seals. This leakage would exhaust to the containment through the broken pressure-over line. The leakage rate at 1,000 psi reactor pressure is estimated to be 1 to 3 gpm, however with the graphitar seals of the stop piston removed, the leakage rate could be as high as 10 gpm, based on experimental measurements. If the reactor were hot, drive temperature would increase. This situation would be indicated to the reactor operator by the drift alarm, by the fully inserted drive, by a high drive temperature annunciated in the main

control room, by sump water level change detected by the high-sensitivity drywell-sump leak detection system, and by operation of the drywell sump pump.

4.6.2.3.2.2.2.3 Simultaneous Breakage of the Pressure-Over (Withdrawn) and Pressure-Under (Insert) Lines

For the simultaneous breakage of the pressure-over (withdrawn) and pressure-under (insert) lines, pressures above and below the drive piston would drop to zero, and the ball check valve would close the broken pressure-under line. Reactor water would flow from the annulus outside the drive, through the vessel ports, and to the space below the drive piston. As in the case of pressure-over line breakage, the drive would then insert (at reactor pressure approximately 600 psig or greater) at a speed dependent on reactor pressure. Full insertion would occur regardless of the operational mode at the time of failure. Reactor water would leak past the drive seals and out the broken pressure-over line to the containment, as described above. Drive temperature would increase. Indication in the main control room would include the drift alarm, the fully inserted drive, the high drive temperature annunciated in the main control room, and operation of the drywell sump pump.

4.6.2.3.2.2.3 All Drive Flange Bolts Fail in Tension

Each CRD is bolted to a flange at the bottom of a drive housing. The flange is welded to the drive housing. Bolts are made of AISI-4140 steel with a minimum tensile strength of 125,000 psi. Each bolt has an allowable load capacity of 15,200 lb. Capacity of the eight bolts is 121,600 lb. As a result of the reactor design pressure of 1,250 psig, the major load on all eight bolts is 30,400 lb.

If a progressive or simultaneous failure of all bolts were to occur, the drive would separate from the housing. The control rod and the drive would be blown downward against the support structure. Impact velocity and support structure loading would be slightly less than that for drive housing failure, because reactor pressure would act on the drive cross-sectional area only and the housing would remain attached to the reactor vessel. The drive would be isolated from the cooling water supply. Reactor water would flow downward past the velocity limiter piston, through the large drive filter, and into the annular space between the thermal sleeve and the drive. For worst-case leakage calculations, the large filter is assumed to be deformed or swept out of the way so it would offer no significant flow restriction. At a point near the top of the annulus, where pressure would

have dropped to 350 psi, the water would flash to steam and cause choke-flow conditions. Steam would flow down the annulus and out the space between the housing and the drive flanges to the drywell. Steam formation would limit the leakage rate to approximately 840 gpm.

If the collet were latched, control rod ejection would be limited to the distance the drive can drop before coming to rest on the support structure. There would be no tendency for the collet to unlatch, because pressure below the collet piston would drop to zero. Pressure forces, in fact, exert 1,435 lb to hold the collet in the latched position.

If the bolts failed during control rod withdrawal, pressure below the collet piston would drop to zero. The collet, with 1,650 lb return force, would latch and stop rod withdrawal.

4.6.2.3.2.2.4 Weld Joining Flange to Housing Fails in Tension

The failure considered is a crack in or near the weld that joins the flange to the housing. This crack extends through the wall and completely around the housing. The flange material is forged, Type 304 stainless steel, with a minimum tensile strength of 75,000 psi. The housing material is seamless, Type 304 stainless steel pipe, with a minimum tensile strength of 75,000 psi. The conventional, full penetration weld of Type 308 stainless steel has a minimum tensile strength approximately the same as that for the parent metal. The design pressure and temperature are 1,250 psig and 575°F. Reactor pressure acting on the cross-sectional area of the drive; the weight of the control rod, drive, and flange; and the dynamic reaction force during drive operation result in a maximum tensile stress at the weld of approximately 5,100 psi.

If the basic flange-to-housing joint failure occurred, the flange and the attached drive would be blown downward against the support structure. The support structure loading would be slightly less than that for drive housing failure, because reactor pressure would act only on the drive cross-sectional area. Lack of differential pressure across the collet piston would cause the collet to remain latched and limit control rod motion to approximately 3 in. Downward drive movement would be small; therefore, most of the drive would remain inside the housing. The pressure-under and pressure-over lines are flexible enough to with- stand the small displacement and remain attached to the flange. Reactor water would follow the same leakage path described above for the flange-bolt failure, except that

exit to the drywell would be through the gap between the lower end of the housing and the top of the flange. Water would flash to steam in the annulus surrounding the drive. The leakage rate would be approximately 840 gpm.

If the basic failure were to occur during control rod withdrawal (a small fraction of the total operating time) and if the collet were held unlatched, the flange would separate from the housing. The drive and flange would be blown downward against the support structure. The calculated steady-state rod withdrawal velocity would be 0.13 ft/sec. Because pressure-under and pressure-over lines remain intact, driving water pressure would continue to the drive, and the normal exhaust line restriction would exist. The pressure below the velocity limiter piston would drop below normal as a result of leakage from the gap between the housing and the flange. This differential pressure across the velocity limiter piston would result in a net downward force of approximately 70 lb. Leakage out of the housing would greatly reduce the pressure in the annulus surrounding the drive. Thus, the net downward force on the drive piston would be less than normal. The overall effect of these events would be to reduce rod withdrawal to approximately one-half of normal speed. With a 560-psi differential across the collet piston, the collet would remain unlatched; however, it should relatch as soon as the drive signal is removed.

4.6.2.3.2.2.5 Housing Wall Ruptures

This failure is a vertical split in the drive housing wall just below the bottom head of the reactor vessel. The flow area of the hole is considered equivalent to the annular area between the drive and the thermal sleeve. Thus, flow through this annular area, rather than flow through the hole in the housing, would govern leakage flow. The CRD housing is made of Inconel 600 seamless tubing (at the penetration to the vessel), with a minimum tensile strength of 80,000 psi, and of Type 304 stainless steel seamless pipe below the vessel with a minimum tensile strength of 75,000 psi. The maximum hoop stress of 9,000 psi results primarily from the reactor design pressure (1,250 psig) acting on the inside of the housing.

If such a rupture were to occur, reactor water would flash to steam and leak through the hole in the housing to the drywell at approximately 1,030 gpm. Choke-flow conditions would exist, as described previously for the flange-bolt failure. However, leakage flow would be greater because flow resistance would be less, that is, the leaking water and steam would not have to flow down the length of the

housing to reach the drywell. A critical pressure of 350 psi causes the water to flash to steam.

There would be no pressure differential acting across the collet piston to unlatch the collet; but the drive would insert as a result of loss of pressure in the drive housing causing a pressure drop in the space above the drive piston.

If this failure occurred during control rod withdrawal, drive withdrawal would stop, but the collet would remain unlatched. The drive would be stopped by a reduction of the net downward force action on the drive line. The net force reduction would occur when the leakage flow of 1,030 gpm reduces the pressure in the annulus outside the drive to approximately 540 psig, thereby reducing the pressure acting on top of the drive piston to the same value. A pressure differential of approximately 710 psi would exist across the collet piston and hold the collet unlatched as long as the operator held the withdraw signal.

4.6.2.3.2.2.6 Flange Plug Blows Out

To connect the vessel ports with the bottom of the ball check valve, a hole of 3/4-in diameter is drilled in the drive flange. The outer end of this hole is sealed with a plug of 0.812-in diameter and 0.25-in thickness. A full-penetration, Type 308 stainless steel weld holds the plug in place. The postulated failure is a full circumferential crack in this weld and subsequent blowout of the plug.

If the weld were to fail, the plug were to blow out, and the collet remained latched, there would be no control rod motion. There would be no pressure differential acting across the collet piston to unlatch the collet. Reactor water would leak past the velocity limiter piston, down the annulus between the drive and the thermal sleeve, through the vessel ports and drilled passage, and out the open plug hole to the drywell at approximately 320 gpm. Leakage calculations assume only liquid flows from the flange. Actually, hot reactor water would flash to steam, and choke-flow conditions would exist. Thus, the expected leakage rate would be lower than the calculated value. Drive temperature would increase and initiate an alarm in the main control room.

If this failure were to occur during control rod withdrawal and if the collet were to stay unlatched, calculations indicate that control rod withdrawal speed would be approximately 0.24 ft/sec. Leakage from the open plug hole in the flange would cause reactor water to flow downward past the velocity limiter piston. A small differential

pressure across the piston would result in an insignificant driving force of approximately 10 lb, tending to increase withdraw velocity.

A pressure differential of 295 psi across the collet piston would hold the collet unlatched as long as the driving signal was maintained.

Flow resistance of the exhaust path from the drive would be normal because the ball check valve would be seated at the lower end of its travel by pressure under the drive piston.

4.6.2.3.2.2.7 Ball Check Valve Plug Blows Out

As a means of access for machining the ball check valve cavity, a 1.25-in diameter hole has been drilled in the flange forging. This hole is sealed with a plug of 1.31-in diameter and 0.38-in thickness. A full-penetration weld, utilizing Type 308 stainless steel filler, holds the plug in place. The failure postulated is a circumferential crack in this weld leading to a blowout of the plug.

If the plug were to blow out while the drive was latched, there would be no control rod motion. No pressure differential would exist across the collet piston to unlatch the collet. As in the previous failure, reactor water would flow past the velocity limiter, down the annulus between the drive and thermal sleeve, through the vessel ports and drilled passage, through the ball check valve cage and out the open plug hole to the drywell. The leakage calculations indicate the flow rate would be 350 gpm. This calculation assumes liquid flow, but flashing of the hot reactor water to steam would reduce this rate to a lower value. Drive temperature would rapidly increase and initiate an alarm in the main control room.

•→10

If the plug failure were to occur during control rod withdrawal (it would not be possible to unlatch the drive after such a failure), the collet would relatch at the first locking groove. If the collet were to stick, calculations indicate the control rod withdrawal speed would be 11.8 ft/sec. There would be a large retarding force exerted by the velocity limiter due to a 35 psi pressure differential across the velocity limiter piston. This event requires multiple failures and is therefore beyond the design basis. The Control Rod Drop Analysis (CRDA) assumes a control rod withdrawal speed of 3.11 ft/sec and this speed is bounding for all single failure events.

10←•

4.6.2.3.2.2.8 Drive/Cooling Water Pressure Control Valve Closure (Reactor Pressure, 0 psig)

The pressure to move a drive is generated by the pressure drop of practically the full system flow through the drive/cooling water pressure control valve. This valve is

either a motor-operated valve or a standby manual valve; either one is adjusted to a fixed opening. The normal pressure drop across this valve develops a pressure 260 psi in excess of reactor pressure.

If the flow through the drive/cooling water pressure control valve were to be stopped, as by a valve closure or flow blockage, the drive pressure would increase to the shutoff pressure of the supply pump. The occurrence of this condition during withdrawal of a drive at zero vessel pressure will result in a drive pressure increase from 260 psig to no more than 2,000 psig. Calculations indicate that the drive would accelerate from 3 in/sec to approximately 7 in/sec. A pressure differential of 1,970 psi across the collet piston would hold the collet unlatched. Flow would be upward, past the velocity limiter piston, but retarding force would be negligible. Rod movement would stop as soon as the driving signal was removed.

4.6.2.3.2.2.9 Ball Check Valve Fails to Close Passage to Vessel Ports

Should the ball check valve sealing the passage to the vessel ports be dislodged and prevented from reseating following the insert portion of a drive withdrawal sequence, water below the drive piston would return to the reactor through the vessel ports and the annulus between the drive and the housing rather than through the speed control valve. Because the flow resistance of this return path would be lower than normal, the calculated withdrawal speed would be 2 ft/sec. During withdrawal, differential pressure across the collet piston would be approximately 40 psi. Therefore, the collet would tend to latch and would have to stick open before continuous withdrawal at 2 ft/sec could occur. Water would flow upward past the velocity limiter piston, generating a small retarding force of approximately 120 lb.

4.6.2.3.2.2.10 Hydraulic Control Unit Valve Failures

Various failures of the valves in the HCU can be postulated, but none could produce differential pressures approaching those described in the preceding sections and none alone could produce a high velocity withdrawal. Leakage through either one or both of the scram valves produces a pressure that tends to insert the control rod rather than to withdraw it. If the pressure in the scram discharge volume should exceed reactor pressure following a scram, a check valve in the line to the scram discharge header prevents this pressure from operating the drive mechanisms.

4.6.2.3.2.2.11 Collet Fingers Fail to Latch

The failure is presumed to occur when the drive withdraw signal is removed. If the collet fails to latch, the drive continues to with- draw at a fraction of the normal speed. This assumption is made because there is no known means for the collet fingers to become unlocked without some initiating signal. Because the collet fingers will not cam open under a load, accidental application of a down signal does not unlock them. (The drive must be given a short insert signal to unload the fingers and cam them open before the collet can be driven to the unlock position.) If the drive withdrawal valve fails to close following a rod withdrawal, the collet would remain open and the drive continue to move at a reduced speed.

4.6.2.3.2.2.12 Withdrawal Speed Control Valve Failure

Normal withdrawal speed is determined by differential pressures in the drive and is set for a nominal value of 3 in/sec. Withdrawal speed is maintained by the pressure regulating system and is independent of reactor vessel pressure. Tests have shown that accidental opening of the speed control valve to the full-open position produces a velocity of approximately 5 in/sec.

The CRD system prevents unplanned rod withdrawal and it has been shown above that only multiple failures in a drive unit and in its control unit could cause an unplanned rod withdrawal.

4.6.2.3.2.3 Scram Reliability

High scram reliability is the result of a number of features of the CRD system. For example:

1. An individual accumulator is provided for each CRD with sufficient stored energy to scram at any reactor pressure. The reactor vessel itself, at pressures above 600 psi, will supply the necessary force to insert a drive if its accumulator is unavailable.

2. Each drive mechanism has its own scram valves and a dual solenoid scram pilot valve; therefore, only one drive can be affected if a scram valve fails to open. Both pilot valve solenoids must be deenergized to initiate a scram.

3. The RPS and the HCUs are designed so that the scram signal and mode of operation override all others.

4. The collet assembly and index tube are designed so they will not restrain or prevent control rod insertion during scram.

5. The scram discharge volume is monitored for accumulated water and the reactor will scram before the volume is reduced to a point that could interfere with a scram.

•→1

6. The Alternate Rod Insertion (ARI) system is designed such that in the event an RPS scram signal is not received, an independate means is available to automatically vent the scram air header.

1←•

4.6.2.3.2.4 Control Rod Support and Operation

As described in the preceding sections, each control rod is independently supported and controlled as required by safety design bases.

4.6.2.3.3 Control Rod Drive Housing Supports

Downward travel of the CRD housing and its control rod following the postulated housing failure equals the sum of these distances: 1) the compression of the disc springs under dynamic loading, and 2) the initial gap between the grid and the bottom contact surface of the CRD flange. If the reactor were cold and pressurized, the downward motion of the control rod would be limited to the spring compression (approximately 2 in) plus a gap of approximately 1 in. If the reactor were hot and pressurized, the gap would be approximately 3/4 in and the spring compression would be slightly less than in the cold condition. In either case, the control rod movement following a housing failure is substantially limited below one drive "notch" movement (6 in). Sudden withdrawal of any control rod through a distance of one drive notch at any position in the core does not produce a transient sufficient to damage any radioactive material barrier.

The CRD housing supports are in place during power operation and when the nuclear system is pressurized. If a control rod is ejected during shutdown, the reactor remains subcritical because it is designed to remain subcritical with any one control rod fully withdrawn at any time.

•→10

At plant operating temperature, a gap of approximately 3/4 in exists between the CRD housing and the supports. At lower temperatures the gap is greater. Because the supports do not contact any of the CRD housing except during the postulated accident condition, vertical contact stresses are prevented. Inspection and testing of CRD housing supports is discussed in Section 4.6.3.2.

10←•