ATTACHMENT 3

Clinton Power Station Setpoint Calculation IP-C-0067

CALCULATION COVER SHEET

DEPT	DIV	CALCULATION NO	REVISION	ADDENDUM	VOLUME
C	NSED	IP-C-0067	0	---	A

TITLE: SETPOINT CALCULATION FOR MAIN STEAM LINE PRESSURE - LOW; TRANSMITTERS 1B21N076A,B,C,D

SIGNATURE BLOCK

PREPARED BY BRUCE A. NICKEL (PRINT) — 7/25/01 (DATE) — Protected for B. Nickel (SIGNATURE)

CHECKED BY STEVE VANDERSLICE (PRINT) — 7/25/01 (DATE) — (SIGNATURE)

REVIEWED BY STEVE VANDERSLICE (PRINT) — 7/25/01 (DATE) — (SIGNATURE)

APPROVED BY BRIAN HAYNES (PRINT) — 7/25/01 (DATE) — FOR BRIAN HAYNES (SIGNATURE)

OWNER'S REVIEW NON-CPS CALC

REVIEWED BY JM ASHCRAFT (PRINT) — 7/31/01 (DATE) — Assignment CARD 2001-05-02 (SIGNATURE)

CORP PREPARED THIS CALC: TTI

QUALITY RELATED: YES [✓] NO [ ]

CONFIRMATION REQUIRED

YES/NO: NO PAGE NO(S): CONFIRMED:

Field Work To Be Performed Per ECN Listed Below

ECN NO	DESIGN RELEASED DATE	CID UPDATED
~~333801~~ cancel 12-2-03		
AR 78522-07		
AR 78721-02		

ECN's listed above shall include "Volume Report" as Affected Documents.

READY FOR INCORPORATION

YES/NO/(N/A): NO ASSIGNED TO: A DATE RFI:

COMMENTS:
AR 78522-07 is tracking ITS revision
AR 78721-02 is tracking ORM revision

NF-161.01-1 R/0 (02/99)

ACN 1/1

CALCULATION BATCH LIST

(May use computer print out and attach it with cover sheet or specify it's location if provided elsewhere in the calculation.)

IS THIS A PARENT CALC: YES [✓] NO [ ]

DEPENDENT CALCULATIONS (Enter either a Parent, Revision, Alias, Addendum or Volume in the relationship column)

#	RELATIONSHIP	DEPT	DIV	CALCULATION NO	REV	ADD	VOL	STATUS BEFORE	STATUS AFTER
1	VOLUME	C	NSED	IP-C-0067	0	---	A	U	A

IMPACTED CALCULATIONS (Enter either an Input, Output, Supplements, or Supersedes in the relationship column)

#	RELATIONSHIP	DEPT	DIV	CALCULATION NO	REV	ADD	VOL	STATUS BEFORE	STATUS AFTER
1	INPUT	C	NSED	IP-C-0089	0	---	---	A	A

REFERENCED CALCULATIONS (Not included as Dependent or Impacted Calculations. Enter Referenced in the relationship column)

ACN 1/1

#	RELATIONSHIP	DEPT	DIV	CALCULATION NO	REV	ADD	VOL

CALCULATION COVER SHEET (Continued)

C	NSED	IP-C-0067	0	---	A
DEPT	DIV	CALCULATION NO	REVISION	ADDENDUM	VOLUME

System Code(s) (or NA): NB, MS

Equipment Identification No. (EINs) (or NA): 1B21N076A,B,C,D; 1B21N676A,B,C,D

Support Number(s) (or NA): NA Location (Bldg/Elev/Area (or NA): NA

Historic ☐ Microfiche Attached: Yes ☐ No ☑ Topic Code: M98

Temporary: ☐

ACN 1/1

NON-CALC INPUTS/OUTPUTS/REFERENCES

(Specify the Location, if provided elsewhere in the calculation)
(Identify in Relationship Column)

#	DOC TYPE	DOC NO	SHT NO	REV NO	DATE	DESCRIPTION	Relationship (I,O,R)
						SECTION 4	I
						SECTION 5	O
						SECTION 6	R

NF-161.01-2 R/0 (02/99)

REVISION HISTORY

C NSED IP-C-0067 0 --- A
DEPT DIV CALCULATION NO REVISION ADDENDUM VOLUME

REVISION OBJECTIVE: ORIGINAL CALCULATION

WHAT INITIATED CHANGE: NA

AFFECTED PAGES: NA

Note: Preparer provide explicit instructions for volume/Addendum Calculations to be Incorporated using "Administrative Revisions".

TABLE OF CONTENTS

CALCULATION COVER SHEET 1

REVISION HISTORY 3

TABLE OF CONTENTS 4

1.0 OBJECTIVE 5

2.0 ASSUMPTIONS 5

3.0 METHODOLOGY 8

4.0 INPUTS 10

5.0 OUTPUTS 13

6.0 REFERENCES 13

7.0 ANALYSIS AND COMPUTATION SECTION(S) 15

8.0 RESULTS 36

9.0 CONCLUSIONS 41

ATTACHMENTS

ATTACHMENT 1, Scaling ..... 8 pgs
ATTACHMENT 2, Results Summary ..... 2 pgs
ATTACHMENT 3, Transmitter Elevations ..... 5 pgs
ATTACHMENT 4, Rosemount Report D8900126, Revision A ..... 20 pgs
ATTACHMENT 5, Heise Digital Pressure Indicator Data ..... 4 pgs

1.0 OBJECTIVE

1.1 To determine the instrument uncertainty, setpoint, and Allowable Value for Main Steam Line Pressure-Low (instruments 1B21N076A-D and 1B21N676A-D).

1.2 This calculation evaluates the adequacy of the current setpoints and allowable values in relationship to the results of 1.1 above.

1.3 The setpoint and Allowable Value for the Main Steam Line Pressure-Low was originally calculated and transmitted in IP-3040 (Input 4.9). GE letter IP-3040 provided CPS specific setpoint information in the absence of a formal CPS calculation. Now that this calculation is in place, these results shall be used in lieu of GE letter IP-3040 results for the parameters covered by this calculation.

2.0 ASSUMPTIONS

2.1 Published instrument vendor specifications are considered to be 2σ values unless specific information is available to indicate otherwise. (Ref. 6.1, Section 4.1.3.4).

2.2 Temperature, humidity, power supply, and ambient pressure errors have been incorporated when provided by the manufacturer. Otherwise, these errors are assumed to be included in the manufacturer's accuracy or repeatability specifications (Ref. 6.1, Section 4.3.1 and Appendix A, Section A.2.1).

2.3 Changes in ambient humidity are assumed to have a negligible effect on the uncertainty of the instruments used in these loops (Ref. 6.1, Appendix I, Section I.2).

2.4 Normal radiation induced errors have been incorporated when provided by the manufacturer. Otherwise, these errors are assumed to be small and capable of being adjusted out each time the instrument is calibrated. Therefore, unless specifically provided, normal radiation errors can be assumed to be included within the instrument drift errors (Ref. 6.1, Appendix I, Section I.1).

2.5 If the manufacturer's instrument performance data does not specify Span, Calibrated Span (CS), Upper Range Limit (URL), etc. the calculation will assume URL because it will result in the most conservative estimate of instrument uncertainty. In all cases the URL is greater than or equal to the CS and it is conservative to use the URL in calculating instrument uncertainties. This is because, by definition, URL is the maximum upper calibrated span limit for the device (Reference 6.1, Section 2.2.92).

2.6 This analysis assumes that the instrument power supply stability (PSS) is within ±5% (±1.2 Vdc) of a nominal 24 Vdc. (Ref. 6.1, App. I, Sect. I.11)

2.7 The Drift Effect will be determined with the assumption of a 30-month calibration interval (24-month nominal plus 25%). Drift will be determined using vendor provided data. Where vendor data is unavailable, drift will be determined in accordance with Reference 6.1.

2.8 It is assumed that the M&TE listed in Section 7.0 of the calibration procedures is calibrated to the required manufacturer's recommendations and within the manufacturer's required environmental conditions. Temperature related errors are based on the difference between the manufacturer's specific calibration temperature and the worst-case temperature at which the device is used (Ref. 6.4 and Ref. 6.1 Appendix H.1).

2.9 Per Reference 6.1, it is assumed that the reference standards used for calibrating M&TE or Calibration tools shall have an uncertainty requirement of not more than ¼ of the tolerance of the equipment being calibrated. A greater uncertainty may be acceptable as limited by "State of the Art". It is generally accepted that the published vendor accuracy of the M&TE or Calibration tool includes the uncertainty of the calibration standard M&TE when the 4:1 accuracy standard is satisfied. Hence, Calibration Standard uncertainty is considered negligible to the overall calibration error term and can be ignored. This assumption is based primarily upon inherent M&TE conservatism built into the calculation.

2.10 Review of historical maintenance work request for the loop indicates the effects associated with EMI and RFI have not resulted in equipment failure or degraded performance during the life of the plant. In addition, vendor performance specifications and qualification test reports do not provide an instrument error specification for the effects of EMI and RFI. As such, any effect related to EMI and RFI are assumed to be negligible. (Ref. 6.1, Section 4.3.1 and Appendix A, Section A.2.1).

2.11 Reference 6.1, Section C.3.14, states, "There are no realistic, identifiable events which would result in a pipe break inside containment of the magnitude required to cause a loss-of-coolant accident coincident with safe shutdown earthquake." Therefore, this calculation considers the effects of a seismic event and loss-of-coolant accident independently to establish the worst-case scenario for the instrumentation being evaluated. Consideration has been given to the accident that this equipment is required to mitigate. As such, this calculation will consider the seismic event as its worst case.

2.12 Per Reference 6.1, Section 4.1.2.2, CPS assumes that functions associated with setpoints will function in their first trip during an event, the point in time when they and they alone, are most relied upon for plant safety. Worst-case environmental conditions, that assume failure of protective equipment, or conditions that would only exist after the point of time where manual operator action is expected, are not applicable to the automatic trip functions that are expected or relied upon to occur in the early part of an event. However, the plant operating conditions under which the automatic trip must be operable should be evaluated. This evaluation must consider the conditions under which the operator depends most on the automatic actions triggered by the setpoint.

For the Main Steam Isolation functions initiated by Main Steam Line Pressure-Low, the protective actions occur within seconds of the event initiation. Per Input 4.9, there is no required accident function time of the Main Steam Line Pressure-Low components. This is a period before reactor power has been significantly reduced and before the operator has had an opportunity to take control of the plant situation. During this early period of the postulated event the core is not uncovered, therefore, no core damage has occurred and no radioactive release would be expected. As such, this calculation assumes the worst rational environmental condition at the time of trip operation will not result in harsh temperature conditions concurrent with high humidity, particularly steam environments, or harsh radiation levels.

Therefore, transmitter errors due to accident radiation effects and the error attributed to insulation resistance accuracy (IRA) are negligible.

In high temperature environments the transmitter errors due to Accuracy Temperature Effect are increased. However, a high temperature environment with a significant impact on transmitter accuracy will not form immediately at the time of reactor scram. Therefore, Accuracy Temperature Effect errors associated with normal operating temperatures are bounding for the Main Steam Line Pressure-Low transmitters.

3.0 METHODOLOGY

This calculation will determine the instrument uncertainty associated with the Main Steam Line Pressure-Low transmitters and trip modules. The evaluation will determine the loop setpoint and Allowable Value for the Main Steam Line Pressure-Low isolation functions. Instrument uncertainty will be determined in accordance with Reference 6.1, CI-01.00, "Instrument Setpoint Calculation Methodology." The evaluation will then compare the current setpoint and Allowable Value with the results determined by this calculation.

However, Per Section 2.1.3 of Reference 6.1, CI-01.00, "Instrument Setpoint Calculation Methodology" states the standard provides flexibility in the precise method in which a setpoint is determined.

As stated in Section 2.1.4 of CI-01.00, the setpoint methodology is based on the industry standard ANSI/ISA S67.04 (Reference 6.7). Recommended Practice ANSI/ISA S67.04.02-2000 (Reference 6.8) provides a detailed methodology for implementing Reference 6.7. CI-01.00 uses Method 1 of Recommended Practice (Ref. 6.8, Section 7), to establish the relationship between the Analytical Limit (AL), Allowable Value (AV) and Nominal Trip Setpoint (NTSP). The Recommended Practice details two other acceptable methods.

Using CI-01.00 standard methodology, AV was calculated as 840.5038 psig and rounded away from the AL to 841 psig. This would require a setpoint change for Main Steam Line Pressure – Low, from 849 to 850 psig. This methodology results in a more conservative approximation of loop uncertainty than Methodology 2 or 3 of Reference 6.8. This extra conservatism comes as a result of effectively algebraically adding the Square Root Sum of the Squares (SRSS) of A_L, PMA & PEA to the SRSS of C_L & D_L, the sum of which, depending upon trip direction, is appropriately added or subtracted from the AL to determine the NTSP.

$$NTSP_{(INC)} = AL - [\,(A_L^2 + PMA^2 + PEA^2)^{1/2} + (C_L^2 + D_L^2)^{1/2}\,].$$

$$NTSP_{(DEC)} = AL + [\,(A_L^2 + PMA^2 + PEA^2)^{1/2} + (C_L^2 + D_L^2)^{1/2}\,].$$

Combining the same error terms entirely by the SRSS method, per Reference 6.8 Methods 2 & 3, yields a smaller error term and an NTSP which demonstrates the current Main Steam Line Pressure – Low setpoint is conservative.

$$NTSP_{(INC)} = AL - (A_L^2 + C_L^2 + D_L^2 + PMA^2 + PEA^2)^{1/2}$$

$$NTSP_{(DEC)} = AL + (A_L^2 + C_L^2 + D_L^2 + PMA^2 + PEA^2)^{1/2}$$

Removing unnecessary conservatism, through use of an alternative industry standard method, will still ensure plant safety as well as maintain the current setpoints.

Method 3 of the Recommended Practice provides for calculation of the Allowable value by summing the uncertainties of drift (D_L), calibration uncertainty (C_L), and "uncertainties during normal operation."

The CI-01.00 method of determining AFT_L determines the SRSS of C_L and D_L.

The methodology used in this calculation to determine AV will be to appropriately sum AFT_L with NTSP.

$$AV_{(inc)} = NTSP + AFT_L$$
$$AV_{(dec)} = NTSP - AFT_L$$

M&TE error will be determined from the results of Calculation IP-C-0089 (Input 4.7.1) which uses building temperature minimum and maximums to develop the uncertainty, and review of the corresponding loop and device calibration procedures (Inputs 4.2.1 through 4.2.7).

Per Reference 6.1, Head Correction is determined by evaluating either drawings, survey data, and/or walk down data as applicable.

4.0 INPUTS

4.1 P&IDs

4.1.1 M05-1002, Sheet 3, Rev. P, "P&ID Main Steam (MS)"

4.2 Calibration Procedures

4.2.1 CPS 9432.03, Rev. 33b,Change 1, "NS4 Main Steam Line Low Pressure B21-N076A (B,C,D) Channel Calibration".
4.2.2 CPS 9432.03D001, Rev. 32, "NSSS Main Steam Line Low Pressure B21-N076A Channel Calibration Data Sheet".
4.2.3 CPS 9432.03D002, Rev. 32, "NSSS Main Steam Line Low Pressure B21-N076B Channel Calibration Data Sheet".
4.2.4 CPS 9432.03D003, Rev. 32, "NSSS Main Steam Line Low Pressure B21-N076C Channel Calibration Data Sheet".
4.2.5 CPS 9432.03D004, Rev. 32, "NSSS Main Steam Line Low Pressure B21-N076D Channel Calibration Data Sheet".
4.2.6 CPS 9030.01, Rev. 31, "Analog Trip Module (ATM) Functional and Calibration Check Instructions".
4.2.7 CPS 9030.01C004, Rev. 24, "NS4 Main Steam Line Pressure B21-N676A(B,C,D) Checklist"

4.3 Technical Manuals

4.3.1 K2801-0091, Tab 2, Rev. 9, "Rosemount Model 1153 Series B Alphaline Pressure Transmitter for Nuclear Service" dated May, 1993.
4.3.2 K2801-0091, Tab 1, Rev. 9, "Rosemount Model 1152 Alphaline Pressure Transmitter for Nuclear Service", dated January 1988.
4.3.3 Rosemount Nuclear Operations Group, "30 Month Stability Specification for Rosemount Model 1152, 1153 and 1154 Pressure Transmitters", Rosemount Report D8900126, Revision A. (provided as Attachment 4)

4.4 System Design Criteria

4.4.1 DC-ME-09-CP, Rev. 11, "Equipment Environmental Design Conditions Design Criteria", (Zone Code H-54, Map Code T.3.1, Turbine Oil Reservoir Room El. 762'; Map Code T.8, Steam Tunnel El. 762'-0" to 796'-0" page 81, and Zone Code M-24, Map Code D.6.2, Main Control Room & Electric Panel Room, El. 800'-0", page 49).

4.5 CPS Drawings

4.5.1 MS-36, Rev. 4E, "Large Bore Isometric, Turbine Building Main Steam", 04/29/85.
4.5.2 MS-909, Rev. 5, "Turbine Building Main Steam Piping"
4.5.3 MS-914, Rev. 5, "Turbine Building Main Steam Piping"
4.5.4 MS-916, Rev. 8, "Turbine Building Main Steam Piping"
4.5.5 MS-913, Rev. 5, "Turbine Building Main Steam Piping"
4.5.6 MS-910, Rev. 10, "Turbine Building Main Steam Piping"
4.5.7 MS-907, Rev. 8, "Turbine Building Main Steam Piping"
4.5.8 M25-1002-17A-K, Rev. U, "Control & Instrument Piping, Turbine Bldg. EL 762'-0""
4.5.9 M25-1002-16A-K, Rev. V, "Control & Instrument Piping, Turbine Bldg. EL 762'-0""
4.5.10 E03-1P661, Sheet 697, Rev. E, "Internal-External Wiring Diagram NSPS Div. 1 Cabinet 1H13-P661"
4.5.11 E03-1P662, Sheet 690, Rev. E, "Internal-External Wiring Diagram NSPS Div. 2 Cabinet 1H13-P662"
4.5.12 E03-1P663, Sheet 667, Rev. D, "Internal-External Wiring Diagram NSPS Div. 3 Cabinet 1H13-P663"
4.5.13 E03-1P664, Sheet 663, Rev. D, "Internal-External Wiring Diagram NSPS Div. 4 Cabinet 1H13-P664"
4.5.14 E02-1NB99 Sheet 214, Rev. C, "Nuclear Boiler System (NB) Nuclear Steam Supply Shutoff System (NSPS) (1B21-1090)".

4.6 Passport (D030), For Information Only

4.6.1 EIN 1B21N076A,C,D; Rosemount Transmitters, Model 1153GB9PC
4.6.2 EIN 1B21N076B; Rosemount Transmitter, Model 1152GP9E
4.6.3 EIN 1B21N676A,B; GE Analog Trip Modules, Model 147D8505G001
4.6.4 EIN 1B21N676C,D; GE Analog Trip Modules, Model 147D8505G005

4.6.5 EIN PG1514, dated 10/15/00

4.7 Calculations

4.7.1 Calculation IP-C-0089, Rev. 0, "M&TE Uncertainty Calculation".

4.8 Equipment Qualification

4.8.1 EQ-CL021, Rev. 35, "Qualification of Rosemount Transmitters Models 1153 Series B and 1154".
4.8.2 SQ-CL001, Rev. 29, Rosemount 1153 Series B and 1154 transmitters.
4.8.3 SQ-CL603, Rev. 15, Qualification for MCR Panels.

4.9 GE Letter, IP-3040, dated January 23, 1987; CPS File Number N55-87(1-23)6 #45123

4.10 Design Specifications/Data Sheets

4.10.1 Design Specification 22A7866, Revision 4, "Analog Trip Module".
4.10.2 DSDS 22A4622AV, Rev. 12, "Nuclear Boiler System, Design Specification Data Sheet."
4.10.3 Design Specification 22A4622, Rev. 7, "Nuclear Boiler System".
4.10.4 PT080, Rev C, "Pressure Transmitters", Data Sheet for 1B21N076B,C
4.10.5 PT047, Rev E, "Pressure Transmitters", Data Sheet for 1B21N076A,D
4.10.6 DL851E381AC, Rev. 19, Nuclear Steam Supply Shutoff System
4.10.7 442X491 Rev.23 "Card Ident List P661"
4.10.8 442X492 Rev.23 "Card Ident List P662"
4.10.9 442X493 Rev.18 "Card Ident List P663"
4.10.10 442X494 Rev.18 "Card Ident List P664"

4.11 NSED Action Plan, GE-99-003, NSED File #077-99(2-17)-6, approved 2/16/99

5.0 OUTPUTS

5.1 Operational Requirements Manual (ORM), Rev. 33

5.1.1 CPS Operational Requirements Manual (ORM), Attachment 2-12, Table 7, "Primary Containment and Drywell Isolation Instrumentation Trip Setpoints", Item 1.b.

5.2 Calibration Procedures

5.2.1 CPS 9432.03, Rev. 33b, Change 1, "NS4 Main Steam Line Low Pressure B21-N076A (B,C,D) Channel Calibration".
5.2.2 CPS 9432.03D001, Rev. 32, "NSSS Main Steam Line Low Pressure B21-N076A Channel Calibration Data Sheet".
5.2.3 CPS 9432.03D002, Rev. 32, "NSSS Main Steam Line Low Pressure B21-N076B Channel Calibration Data Sheet".
5.2.4 CPS 9432.03D003, Rev. 32, "NSSS Main Steam Line Low Pressure B21-N076C Channel Calibration Data Sheet".
5.2.5 CPS 9432.03D004, Rev. 32, "NSSS Main Steam Line Low Pressure B21-N076D Channel Calibration Data Sheet".
5.2.6 CPS 9030.01, Rev. 31, "Analog Trip Module (ATM) Functional and Calibration Check Instructions".
5.2.7 CPS 9030.01C004, Rev. 24, "NS4 Main Steam Line Pressure B21-N676A(B,C,D) Checklist"

5.3 CPS Technical Specifications, Amendment 140

5.3.1 Table 3.3.6.1-1, "Primary Containment and Drywell Isolation Instrumentation", Item 1.b, "Main Steam Line Pressure - Low"

6.0 REFERENCES

6.1 CI-01.00, Rev. 2, Instrument Setpoint Calculation Methodology

6.2 CPS USAR, Rev. 9

6.2.1 CPS USAR Section 7.3.1.1.2.4.1.5, "Main Turbine Inlet- Low Steam Pressure".
6.2.2 Figure 3.11-1, "Environmental Zone Map, Turbine Building Floor Plan El. 762'-0"".
6.2.3 Figure 3.11-13, "Environmental Zone Map, Control Building, Main Floor Plan El. 800'-0"".

6.2.4 Table 7.3-7, "Instrument Channel Required for Containment and Reactor Vessel Isolation Control System."

6.3 CPS Technical Specifications, Amendment 140

6.3.1 Table 3.3.6.1-1, "Primary Containment and Drywell Isolation Instrumentation", Item 1.b, "Main Steam Line Pressure - Low".

6.3.2 Bases Section 3.3.6.1, "Primary Containment and Drywell Isolation Instrumentation"

6.4 CPS 1512.01, Rev. 17c, "Calibration and Control of Measuring and Test Equipment".

6.5 NEDC-31336, General Electric Instrument Setpoint Methodology, October 1986

6.6 Meyer, C. A., McClintock, R. B., Silvestri, G. J., Spencer, Jr., R. C., "Thermodynamic and Transport Properties of Steam Comprising Tables and Charts for Steam and Water", The American Society of Mechanical Engineers, New York, New York, 1967.

6.7 ANSI/ISA-67.04.01-2000, Reaffirmation of ANSI/ISA-67.04, Part I-1994 "Setpoints for Nuclear Safety-Related Instrumentation" February 29, 2000

6.8 ANSI/ISA-67.04.02-2000, Recommended Practice "Methodologies for the Determination of Setpoints for Nuclear Safety-Related Instrumentation" January 1, 2000

7.0 ANALYSIS AND COMPUTATION SECTION(S)

7.1 LOOP FUNCTION

The Main Steam Line Pressure - Low provides signals for closure of the Main Steam Isolation Valves (MSIVs) in the event of a steam line pressure regulator failure. The Main Steam Line Pressure - Low function ensures that the RPV temperature change limit of 100°F per hour is not reached.

Main steam line low pressure is monitored by four pressure transmitters that sense pressure on the main steam line header downstream of the outboard main steam isolation valves. The 1B21N076A-D transmitter signal outputs are input to the ATM circuits 1B21N676A-D. The trip outputs of the ATMs are transmitted to a 2-out-of-4 logic Primary Containment and Drywell MSIV circuitry (Ref. 6.3.2). These instrument loops satisfy the CPS Technical Specification requirements listed in Table 3.3.6.1-1 Item 1b (Ref. 6.3.1). The Allowable Value and instrument setpoint are selected to be high enough to prevent excessive RPV depressurization in the event of a pressure regulator failure.

Refer to the USAR sections listed under Reference 6.2 for additional details regarding the discussion above.

7.2 LOOP DIAGRAM

Inputs 4.4.1, 4.5.8-14, and References 6.2.2 and 6.2.3

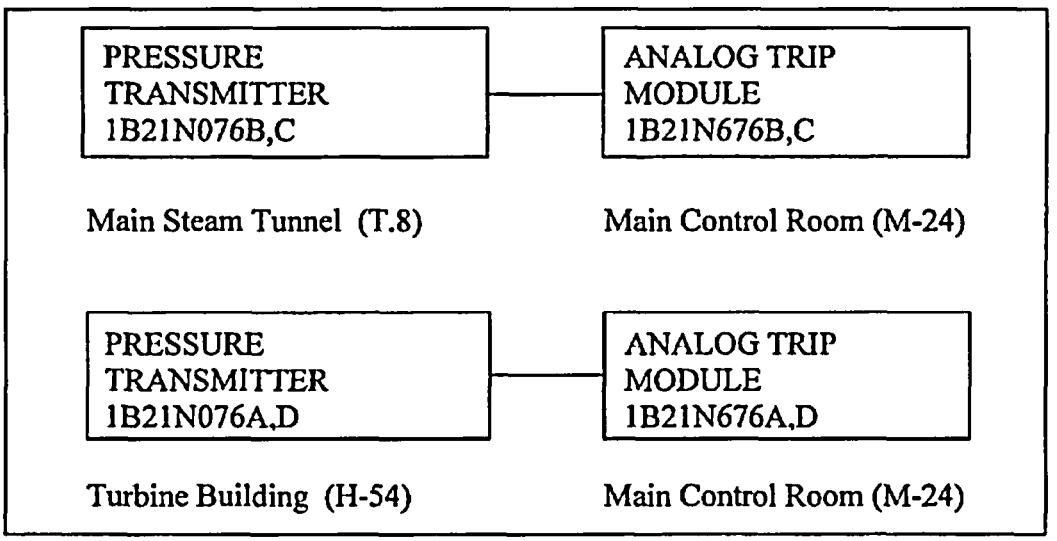

1B21N076B,C

Environmental Zone	Main Steam Tunnel T.8
Normal Temperature	65 to 122° F
Normal Humidity	5 to 90% RH
Normal Radiation	1×10^6 Rads
Accident Temperature	Not Controlled
Accident Humidity	Not Controlled
Accident Radiation	Not Controlled
Seismic	SQ-CL001

1B21N076A,D

Environmental Zone	Turbine Oil Reservoir H-54
Normal Temperature	65 to 104° F
Normal Humidity	5 to 90% RH
Normal Radiation	1×10^4 Rads
HELB Temperature	65 to 328° F
Accident Humidity	100%
Accident Radiation	N/A
Seismic	SQ-CL001

1B21N676A-D

Environmental Zone	MCR M-24
Normal Temperature	65 to 104 °F
Normal Humidity	35 to 100% RH
Normal Radiation	1×10^3 Rads
Accident Temperature	65 to 104 °F
Accident Humidity	35 to 100% RH
Accident Radiation	1×10^3 Rads
Seismic	SQ-CL603

From Inputs 4.4.1, 4.5.8, 4.5.9, and 6.2.2, the 1B21N076B,C transmitters are in the environmental zone for the Main Steam Tunnel (Map Code T.8) and 1B21N076A,D transmitters are in the environmental zone H-54 for the Turbine Oil Reservoir Room at the 762-foot elevation (Map Code T.3.1). From Inputs 4.4.1, 4.5.10, 4.5.11, 4.5.12, 4.5.13 and Ref. 6.2.3 the 1B21N676A-D ATM(s) are in the Main Control Room on H13-P661, H13-P662, H13-P663, and H13-P664 panels (Zone Code M-24, Map Code D.6.2), respectively.

7.3 EQUATIONS

The equations for NTSP (Section 7.3.4) and AV (Section 7.3.5) are taken from Section 3.0, Methodology. All remaining equations in this section are taken from the table in CI-01.00 (Reference 6.1, Section 4.5.4).

7.3.1 Loop Accuracy (A_L):

Derived from the SSRS combination of loop components, where error attributed for each loop component is evaluated by:

$$A_1 = \pm N\sqrt{\left(\frac{VA_1}{n}\right)^2 + \left(\frac{ATE_1}{n}\right)^2 + \left(\frac{OPE_1}{n}\right)^2 + \left(\frac{SPE_1}{n}\right)^2 + \left(\frac{SE_1}{n}\right)^2 + \left(\frac{RE_1}{n}\right)^2 + \left(\frac{HE_1}{n}\right)^2 + \left(\frac{PSE_1}{n}\right)^2 + \left(\frac{REE_1}{n}\right)^2} \pm B \qquad (2\sigma)$$

A_L is defined as:

$$A_L = \pm\sqrt{A_1^2 + A_2^2 + A_3^2 + \ldots} \pm B \qquad (2\sigma)$$

7.3.2 Loop Calibration Error (C_L):

$$C_L = \pm N\sqrt{\sum\left(\frac{ALT_i}{n}\right)^2 + \sum\left(\frac{C_i}{n}\right)^2 + \sum\left(\frac{C_iSTD}{n}\right)^2} \qquad (2\sigma)$$

7.3.3 Loop Drift (D_L):

$$D_L = \pm N\sqrt{\left(\frac{D_1}{n}\right)^2 + \left(\frac{D_2}{n}\right)^2 + \ldots + \left(\frac{D_n}{n}\right)^2} \qquad (2\sigma)$$

7.3.4 Nominal Trip Setpoint Calculation

The Nominal Trip Setpoint (NTSP) should be calculated using the equations below depending on the direction of process variable change when approaching the Analytical Limit.

For process variables that increase to trip.

$$NTSP = AL - \left(\frac{1.645}{2}\right)\sqrt{A_L^2 + C_L^2 + D_L^2 + PMA^2 + PEA^2} - B$$

For process variables that decrease to trip.

$$NTSP = AL + \left(\frac{1.645}{2}\right)\sqrt{A_L^2 + C_L^2 + D_L^2 + PMA^2 + PEA^2} + B$$

Note: An (1.645/N) adjustment is applicable to setpoints that have a limit approached in one direction (single sided interest).

7.3.5 Allowable Value Calculation

The Allowable Value may be calculated for an increasing trip as follows:

$$AV_{(INC)} = NTSP + AFT_L$$

The Allowable Value may be calculated for a decreasing trip as follows:

$$AV_{(DEC)} = NTSP - AFT_L$$

7.3.6 Calculation of As-Found Values

The device As-Found Tolerance will be determined via the Square-Root-Sum-of-the-Squares (SRSS) of the device's As-Left Tolerance, its drift, and the M&TE error used to calibrate the device.

$$AFT_i = \pm(N)\sqrt{\left(\frac{ALT_i}{n}\right)^2 + \left(\frac{D_i}{n}\right)^2 + \left(\frac{C_i}{n}\right)^2} \qquad (2\sigma)$$

Where:

ALT_i = device's As-Left Tolerance
D_i = device's drift value
C_i = errors of M&TE used to calibrate the device

The loop As-Found Tolerance (AFT) will be calculated as follows:

$$AFT_L = \pm(N)\sqrt{\left(\frac{C_L}{n}\right)^2 + \left(\frac{D_L}{n}\right)^2} \qquad (2\sigma)$$

Where:

D_L = Loop devices' drift value, as defined in Section 7.3.3
C_L = Loop devices' calibration effect, as defined in Section 7.3.2

However, since the transmitter and trip module are calibrated as a string per Input 4.2.1, the As Found Tolerance determined by this calculation will be applicable to the string.

7.3.7 Calculation of As-Left Values

The loop As-Left Tolerance (ALT) will be calculated as follows:

$$ALT_L = \pm(N)\sqrt{\left(\frac{ALT_1}{n}\right)^2 + \left(\frac{ALT_2}{n}\right)^2 + \ldots + \left(\frac{ALT_n}{n}\right)^2} \qquad (2\sigma)$$

Where:

$$ALT_i = \pm VA_i \qquad (2\sigma)$$

7.4 Determination of Uncertainties

7.4.1 Rosemount Transmitters 1B21N076A-D

- From Input 4.10.5, EIN 1B21N076A,C,D are Rosemount 1153GB9P transmitters. From Input 4.10.4, EIN 1B21N076B is a Rosemount 1152GP9E transmitter. Per Input 4.10.4, an acceptable replacement transmitter for the 1152GP9E is the 1153GB9P. For conservatism, the 1153GB9P is analyzed, since it has a larger seismic effect and accuracy temperature effect (all other specifications are the same).
- From Input 4.3.1, Vendor Accuracy = ± 0.25% of Calibrated Span
- From Inputs 4.10.4 and 4.10.5, Calibrated Span = 0-1200 psig
- From Inputs 4.3.1, 4.10.4 and 4.10.5, Upper Range Limit = 0-3000 psig

7.4.1.1 Vendor Accuracy of pressure transmitters (VA_{PT}) – Per Input 4.3.1, Vendor Accuracy is ± 0.25% of Calibrated Span. Therefore:

$$\mathbf{VA_{PT} = \pm 0.25\%\ Span} \qquad (3\sigma)$$

7.4.1.2 Accuracy Temperature Effect

7.4.1.2.1 Normal Accuracy Temperature Effect ($ATE_{PT(Normal)}$) – Per Input 4.3.1, the ATE is calculated by ± (0.75% URL + 0.5% Span) per 100 °F ambient temperature change. Per Input 4.4.1 and Section 7.2, the maximum ambient temperature change equals 57 °F (122°-65°F) during normal operations. Per Section 7.4.1 above, URL is 3000 psig and calibrated span is 1200 psig. Therefore:

$$ATE_{PT(Normal)} = \pm\ (0.75\%\ URL + 0.5\%\ Span) * (57\ °F / 100\ °F)$$

$ATE_{PT(Normal)} = \pm$ (0.75% URL * (3000 psig/1200 psig) + 0.5% Span) * (57 °F /100 °F)

$ATE_{PT(Normal)} = \pm$ (1.875 % Span + 0.5% Span) * 0.57

$ATE_{PT(Normal)} = \pm$ 1.3538% Span (3σ)

7.4.1.2.2 Accident Accuracy Temperature Effect ($ATE_{PT(Accid)}$) – Per Assumption 2.12, the transmitters are not required to function when exposed to harsh accident / post-accident temperature profiles. Thus, it is assumed that the Accuracy Temperature Effect errors associated with normal operating temperatures are bounding for the Main Steam Line-Low Pressure transmitters. Therefore:

$ATE_{PT(Accid)} = ATE_{PT(Normal)} = \pm$ 1.3538% Span (3σ)

7.4.1.3 Humidity Effect (HE_{PT}) – The vendor does not provide any specification for this effect (Input 4.3.1). Therefore, per Assumption 2.3, Humidity Effects are negligible.

$HE_{PT} = 0$

7.4.1.4 Radiation Effect

7.4.1.4.1 Normal Radiation Effect ($RE_{PT(Normal)}$) – Per Assumption 2.4, normal Radiation Effects are not distinguishable from Drift. Therefore:

$RE_{PT(Normal)} = 0$

7.4.1.4.2 Accident Radiation Effects ($RE_{PT(Accid)}$) – Per Input 4.9, the subject transmitters have a post-accident operating time of 0 (zero) seconds. Per Assumption 2.12, this first trip occurs at the time of event initiation, and therefore the accident radiation effect is considered negligible. Therefore:

$RE_{PT(Accid)} = 0$

7.4.1.5 Power Supply Effects of pressure transmitters (PSE_{PT}) – Per Input 4.3.1, PSE is "less than ± 0.005% Span per Volt". Per Assumption 2.6, PSS is ± 1.2 Vdc. Therefore:

$PSE_{PT} = \pm$ (0.005% Span/Vdc) *PSS

$PSE_{PT} = \pm$ (0.005% Span/Vdc)*1.2 Vdc

$PSE_{PT} = \pm$ 0.006 % Span **(3σ)**

7.4.1.6 Static Pressure Effect (SPE_{PT}) – Per Reference 6.1, A.2.1.a.(1).(c), Static Pressure Effect is only applicable to differential pressure transmitters.

$SPE_{PT} = 0$

7.4.1.7 Overpressure Effect (OPE_{PT}) – Per Reference 6.1, Section C.3.8, the Overpressure Effect is not applicable for instruments that are not over ranged by process pressure.

$OPE_{PT} = 0$

7.4.1.8 Seismic Effect

7.4.1.8.1 Normal Seismic Effect ($SE_{PT(Normal)}$) – Seismic activity is not considered when determining instrument uncertainty under normal conditions. Therefore:

$SE_{PT(Normal)} = 0$

7.4.1.8.2 Accident Seismic Effect ($SE_{PT(Accid)}$) – Per Assumption 2.11, Seismic Effect is not considered to occur concurrent with a postulated LOCA event.

$SE_{PT(Accid)} = 0$

7.4.1.8.3 OBE/SSE Seismic Effect ($SE_{PT(Seismic)}$) - Per Input 4.3.1, Seismic Effect is ± 0.5% URL during and after a seismic disturbance defined by a required response spectrum with a ZPA of 4 g's. Per Section 7.4.1 above, URL is 3000 psig and calibrated span is 1200 psig. Therefore:

$SE_{PT} = \pm$ (0.5% URL) * (3000 psig/1200 psig)

$SE_{PT} = \pm$ (0.5%) * 2.500

$SE_{PT} = \pm$ 1.250% Span **(2σ)**

7.4.1.9 RFI/EMI Effect (REE_{PT}) – Per Assumption 2.10, the effects of RFI/EMI are considered negligible.

$REE_{PT} = 0$

7.4.1.10 Bias (B_{PT}) – From Appendix C of Reference 6.1, Bias is defined as a systematic or fixed instrument uncertainty that is predictable for a given set of conditions because of the existence of a known direction (positive or negative). The only known uncertainty identified is insulation resistance error. Per Assumption 2.12, insulation resistance error effects are considered negligible for instrument setpoint actions that occur prior to or very early in a postulated LOCA event. This assumption is applicable to the subject of this analysis. Therefore:

$B_{PT} = 0$

7.4.1.11 Pressure Transmitter Accuracy - Per Section 7.3.1, device accuracy is calculated using the following equation:

$$A_i = \pm N\sqrt{\left(\frac{VA_i}{n}\right)^2 + \left(\frac{ATE_i}{n}\right)^2 + \left(\frac{OPE_i}{n}\right)^2 + \left(\frac{SPE_i}{n}\right)^2 + \left(\frac{SE_i}{n}\right)^2 + \left(\frac{RE_i}{n}\right)^2 + \left(\frac{HE_i}{n}\right)^2 + \left(\frac{PSE_i}{n}\right)^2 + \left(\frac{REE_i}{n}\right)^2} \pm B$$

7.4.1.11.1 Normal Pressure Transmitter Accuracy ($A_{PT(Normal)}$)

From above:

VA_{PT}	= ± 0.2500% Span	(3σ)	Section 7.4.1.1
$ATE_{PT\ (Normal)}$	= ± 1.3538 % Span	(3σ)	Section 7.4.1.2.1
OPE_{PT}	= 0		Section 7.4.1.7
SPE_{PT}	= 0		Section 7.4.1.6
$SE_{PT\ (Normal)}$	= 0		Section 7.4.1.8.1
$RE_{PT\ (Normal)}$	= 0		Section 7.4.1.4.1
HE_{PT}	= 0		Section 7.4.1.3
PSE_{PT}	= ± 0.006% Span	(3σ)	Section 7.4.1.5
REE_{PT}	= 0		Section 7.4.1.9
B_{PT}	= 0		Section 7.4.1.10

Substituting:

$$A_{PT(Normal)} = \pm 2\sqrt{\left(\frac{0.25\%span}{3}\right)^2 + \left(\frac{1.3538\%span}{3}\right)^2 + (0)^2 + (0)^2 + (0)^2 + (0)^2 + (0)^2 + \left(\frac{0.006\%span}{3}\right)^2 + (0)^2 + 0}$$

$A_{PT(Normal)}$ = ± 0.9178 % Span (2σ)

7.4.1.11.2 Accident Pressure Transmitter Accuracy ($A_{PT(Accid)}$)

From above:

VA_{PT}	= ± 0.2500% Span	(3σ)	Section 7.4.1.1
$ATE_{PT\ (Accid)}$	= ± 1.3538 % Span	(3σ)	Section 7.4.1.2.2
OPE_{PT}	= 0		Section 7.4.1.7
SPE_{PT}	= 0		Section 7.4.1.6
$SE_{PT\ (Accid)}$	= 0		Section 7.4.1.8.2
$RE_{PT\ (Accid)}$	= 0		Section 7.4.1.4.2
HE_{PT}	= 0		Section 7.4.1.3
PSE_{PT}	= ± 0.006% Span	(3σ)	Section 7.4.1.5
REE_{PT}	= 0		Section 7.4.1.9
B_{PT}	= 0		Section 7.4.1.10

Substituting:

$$A_{PT(Accid)} = \pm 2\sqrt{\left(\frac{0.25\%span}{3}\right)^2 + \left(\frac{1.3538\%span}{3}\right)^2 + (0)^2 + (0)^2 + (0)^2 + (0)^2 + (0)^2 + \left(\frac{0.006\%span}{3}\right)^2 + (0)^2 + 0}$$

$$\mathbf{A_{PT(Accid)} = \pm\ 0.9178\ \%\ Span} \qquad (2\sigma)$$

7.4.1.11.3 Seismic Pressure Transmitter Accuracy ($A_{PT(Seismic)}$)

From above:

VA_{PT}	= ± 0.2500% Span	(3σ)	Section 7.4.1.1
$ATE_{PT\ (Normal)}$	= ± 1.3538 % Span	(3σ)	Section 7.4.1.2.1
OPE_{PT}	= 0		Section 7.4.1.7
SPE_{PT}	= 0		Section 7.4.1.6
$SE_{PT\ (Seismic)}$	= ± 1.250 % Span	(2σ)	Section 7.4.1.8.3
$RE_{PT\ (Normal)}$	= 0		Section 7.4.1.4.1
HE_{PT}	= 0		Section 7.4.1.3
PSE_{PT}	= ± 0.006% Span	(3σ)	Section 7.4.1.5
REE_{PT}	= 0		Section 7.4.1.9
B_{PT}	= 0		Section 7.4.1.10

Substituting:

$$A_{PT(Seismic)} = \pm 2\sqrt{\left(\frac{0.25\%span}{3}\right)^2 + \left(\frac{1.3538\%span}{3}\right)^2 + (0)^2 + (0)^2 + \left(\frac{1.250\%span}{2}\right)^2 + (0)^2 + (0)^2 + \left(\frac{0.006\%span}{3}\right)^2 + (0)^2 + 0}$$

$$\mathbf{A_{PT(Seismic)} = \pm\ 1.5508\%\ Span} \qquad (2\sigma)$$

7.4.1.11.4 Pressure Transmitter Accuracy (A_{PT})

Based on the above, the largest uncertainty is expected under seismic conditions. Therefore:

A_{PT} = $A_{PT(Seismic)}$

$$\mathbf{A_{PT} = \pm\ 1.5508\ \%\ Span} \qquad (2\sigma)$$

7.4.2 Analog Trip Module (ATM) 1B21N676A-D

- Per Inputs 4.10.7, 4.10.8, 4.10.9 and 4.10.10, EINs 1B21N676A,B are GE Analog Trip Modules, Model Number 147D8505G001; alternate Model Number 147D8505G006.
- Per Inputs 4.10.7, 4.10.8, 4.10.9 and 4.10.10, EINs 1B21N676C,D are GE Analog Trip Modules, Model Number 147D8505G005; alternate Model Number 147D8505G006.
- Per Input 4.10.1, the input range for the ATM is 4-20 mA.
- Per Input 4.10.1, the vendor accuracy is ± 0.25% Full Scale (Span).
- Per Section 7.2, these ATMs are located in a mild environment and therefore accident conditions need not be considered.

7.4.2.1 Vendor Accuracy (VA_{ATM}) –Per Input 4.10.1, the vendor accuracy is ± 0.25% Span. Therefore:

$$\mathbf{VA_{ATM} = \pm\ 0.25\%\ Span} \qquad (2\sigma)$$

7.4.2.2 Accuracy Temperature Effect (ATE_{ATM}) – The vendor does not provide any specification for this effect (Input 4.10.1). Therefore, per Assumption 2.2, the Accuracy Temperature Effect is considered to be included in the vendor accuracy.

$$\mathbf{ATE_{ATM} = 0}$$

7.4.2.3 Overpressure Pressure Effect (OPE_{ATM}) – OPE is not applicable to Analog Trip Modules.

$$\mathbf{OPE_{ATM} = 0}$$

7.4.2.4 Static Pressure Effect (SPE_{ATM}) – SPE is not applicable to Analog Trip Modules.

$$\mathbf{SPE_{ATM} = 0}$$

7.4.2.5 Seismic Effect (SE_{ATM}) – Analog Trip Modules have been seismically qualified using the manufacturer's published accuracy requirements (Input 4.8.3). Based on a review of Input 4.8.3, there are no additional error considerations which must be considered for seismic conditions. Therefore:

$$SE_{ATM} = 0$$

7.4.2.6 Radiation Effect (RE_{ATM}) – The 1B21N676A-D ATMs are located in a mild environment (Section 7.2), and therefore, not subject to any significant radiation exposure. Therefore, the Radiation Effect is considered negligible.

$$RE_{ATM} = 0$$

7.4.2.7 Humidity Effect (HE_{ATM}) – The vendor does not provide any specification for this effect (Input 4.10.1). Therefore, per Assumption 2.2, the Humidity Effect is considered to be included in the Vendor Accuracy.

$$HE_{ATM} = 0$$

7.4.2.8 Power Supply Effect (PSE_{ATM}) - The vendor does not provide any specification for this effect (Input 4.10.1). Therefore, per Assumption 2.2, the Power Supply Effect is considered to be included in the Vendor Accuracy.

$$PSE_{ATM} = 0$$

7.4.2.9 RFI/EMI Effect (REE_{ATM}) – Per Assumption 2.10, the effects of RFI/EMI are considered negligible.

$$REE_{ATM} = 0$$

7.4.2.10 Bias (B_{ATM}) – From Appendix C of Reference 6.1, Bias is defined as a systematic or fixed instrument uncertainty that is predictable for a given set of conditions because of the existence of a known direction (positive or negative). No such error was identified for the ATMs used for measurement of the Main Steam Line Pressure – Low function. Therefore:

$$B_{ATM} = 0$$

7.4.2.11 From Section 7.3.1, A_{ATM} is calculated by:

$$A_i = \pm N\sqrt{\left(\frac{VA_i}{n}\right)^2 + \left(\frac{ATE_i}{n}\right)^2 + \left(\frac{OPE_i}{n}\right)^2 + \left(\frac{SPE_i}{n}\right)^2 + \left(\frac{SE_i}{n}\right)^2 + \left(\frac{RE_i}{n}\right)^2 + \left(\frac{HE_i}{n}\right)^2 + \left(\frac{PSE_i}{n}\right)^2 + \left(\frac{REE_i}{n}\right)^2} + B$$

From above:

VA_{ATM}	= ± 0.25% Span	(2σ)	Section 7.4.2.1
ATE_{ATM}	= 0		Section 7.4.2.2
OPE_{ATM}	= 0		Section 7.4.2.3
SPE_{ATM}	= 0		Section 7.4.2.4
SE_{ATM}	= 0		Section 7.4.2.5
RE_{ATM}	= 0		Section 7.4.2.6
HE_{ATM}	= 0		Section 7.4.2.7
PSE_{ATM}	= 0		Section 7.4.2.8
REE_{ATM}	= 0		Section 7.4.2.9
B_{ATM}	= 0		Section 7.4.2.10

Substituting:

$$A_{ATM} = \pm 2\sqrt{\left(\frac{0.25\%\text{span}}{2}\right)^2 + (0)^2 + (0)^2 + (0)^2 + (0)^2 + (0)^2 + (0)^2 + (0)^2 + (0)^2 + 0}$$

A_{ATM} = ± 0.25% Span **(2σ)**

7.4.3 Loop Accuracy (A_L)

From Section 7.3.1:

$$A_L = \pm\sqrt{A_1^2 + A_2^2 + A_3^2 + \ldots} \pm B$$

For the 1B21N076A-D and 1B21N676A-D loop:

A_{PT}	= ± 1.5508% Span	(2σ)	Section 7.4.1.11.4
A_{ATM}	= ± 0.25% Span	(2σ)	Section 7.4.2.11

Substituting:

$$A_L = \pm\sqrt{1.5508\ \%\ span^2 + 0.25\ \%\ span^2} \pm 0 \pm 0$$

$$A_L = \pm\sqrt{A_{PT}^2 + A_{ATM}^2} \pm B_{PT} \pm B_{ATM}$$

$A_L = \pm 1.5708$ % Span (2σ)

7.5 Loop Calibration Error (C_L)

Loop Calibration Error is determined by the SRSS of As-Left Tolerance (ALT_i), Calibration Tool Error (C_i), and Calibration Standards Error ($C_{i\,STD}$) for the individual devices in the loop. The equation below is used to calculate this effect.

From Section 7.3.2:

$$C_L = \pm N\sqrt{\sum\left(\frac{ALT_i}{n}\right)^2 + \sum\left(\frac{C_i}{n}\right)^2 + \sum\left(\frac{C_i STD}{n}\right)^2}$$

7.5.1 As-Left Tolerance (ALT_L)

From Section 7.3.7, loop As-Left Tolerance (ALT) will be calculated as follows:

$$ALT_L = \pm(N)\sqrt{\left(\frac{ALT_1}{n}\right)^2 + \left(\frac{ALT_2}{n}\right)^2 + \ldots + \left(\frac{ALT_n}{n}\right)^2} \qquad (2\sigma)$$

Where:

$$ALT_i = \pm VA_i \qquad (2\sigma)$$

Determining the ALT for the transmitter (ALT_{PT}):

VA_{PT} = ± 0.25% Span (Section 7.4.1.1)

Therefore;

ALT_{PT} = ± 0.2500% Span (2σ)

Determining the ALT for the Analog Trip Module (ALT_{ATM}):

$VA_{ATM} = \pm 0.25\%$ Span (Section 7.4.2.1)

Therefore;

$ALT_{ATM} = \pm 0.2500\%$ Span **(2σ)**

Determining the ALT for the Main Steam Line Pressure – Low loops (ALT_L). Substituting ALT_{PT} and ALT_{ATM} into the equation from Section 7.3.7:

$$ALT_L = \pm(N)\sqrt{\left(\frac{ALT_{PT}}{n}\right)^2 + \left(\frac{ALT_{ATM}}{n}\right)^2}$$

$$ALT_L = \pm(2)\sqrt{\left(\frac{0.25\%Span}{2}\right)^2 + \left(\frac{0.25\%Span}{2}\right)^2}$$

$ALT_L = \pm 0.3536\%$ Span **(2σ)**

Converting ALT_L to psig:

Per Inputs 4.10.4 and 4.10.5, process span = 1200 psig.

$ALT_L = \pm 0.3536\%$ Span
$ALT_L = \pm 0.3536\%$ Span * 1200 psig / 100%Span
$ALT_L = \pm 4.2432$ psig (2σ)

Per Inputs 4.2.2, 4.2.3, 4.2.4 and 4.2.5, As-Left Tolerance for Loop calibration is -0 psig to +8 psig, or a difference of +8 psig.

Per Section 4.4.2 of Reference 6.1, "ALT_L selected for use in the calibration procedure should be used to calculate C_L and AFT_L." Non-symmetric uncertainties such as this one shall be taken as the span of a tolerance evenly distributed around the nominal setpoint. Therefore:

$ALT_L = \pm 8.0$ psig / 2
$ALT_L = \pm 4.0$ psig (2σ)

The calculated tolerance (± 4.2432 psig) is greater than the calibration procedure tolerance (± 4 psig). However, when the calculated tolerance is rounded to the precision of the calibration procedure per Ref. 6.1, the calculated tolerance and the procedure tolerance are the same. Therefore:

$$\mathbf{ALT_L = \pm 4\ psig} \qquad (2\sigma)$$

7.5.2 Calibration Tool Error (C_I)

7.5.2.1 Transmitter Calibration Tool Error (C_{PT})

The 1B21N076A,B,C,D transmitters are calibrated with a DC voltmeter that is capable of measuring 1-5 Vdc (currently specified as a Fluke 45) and a test gauge with a range of 0-1500 psig. A 250-ohm precision resistor is required, accurate to ± 0.02 ohms. This information is from Section 7.0 of Input 4.2.1.

The test gauge to be used for the calibration should be a temperature compensated Digital Heise Model ST-2H Indicator Assembly with the HQS-2 1500 psig module installed.

From Attachment 5:

$$VA_{PG} = \pm 0.025\%\ Span$$
$$ALT_{PG} = \pm 0.9\ psig$$
$$= \pm 0.9\ psig / 1500\ psig$$
$$= \pm 0.06\%\ Span$$

Per Attachment 5, the HQS-2 indicator is temperature compensated over a range of 20°F to 120°F, therefore:

$$ATE = 0$$

$$C_{PG} = \pm (VA^2 + ATE^2 + ALT^2)^{1/2}$$
$$= \pm (0.025\%\ Span^2 + 0^2 + 0.06\%\ Span^2)^{1/2}$$
$$= \pm 0.065\%\ Span$$

Converting to the span of the process instruments:

$$C_{PG} = \pm 0.065\%\ Span * (1500\ psig/1200\ psig)$$
$$\mathbf{C_{PG} = \pm 0.0813\%\ Span} \qquad (3\sigma)$$

The voltmeter to be used for the calibration should be a Fluke 45, using the slow resolution to monitor the 1-5 Volt DC span.

The M&TE error for the voltmeter (C_{VM}) is therefore:

$C_{VM} = \pm 0.097\%$ Span (3σ)

$C_{VM} = \pm 0.004$ Vdc (max temp band of 22°C) (Input 4.7.1)

The M&TE error for the precision resistor (C_{PR}) is therefore:

$C_{PR} = \pm 0.02/250 * 100$
$C_{PR} = \pm 0.008\%$ Span (3σ)

Substituting terms for the 1B21N076A-D and 1B21N676A-D loop:

$$C_{PT} = \pm\sqrt{C_{PG}^2 + C_{VM}^2 + C_{PR}^2}$$

$$C_{PT} = \pm\sqrt{0.0813\%span^2 + 0.097\%span^2 + 0.008\%span^2}$$

$C_{PT} = \pm 0.1268\%$ Span (3σ)

Converting to psig:

$C_{PT} = \pm 0.1268\%$ Span * 1200 psig

$C_{PT} = \pm 1.5216$ psig (3σ)

7.5.2.2 ATM Calibration Tool Error (C_{ATM})

The ATM's are calibrated using a DAC. The DAC accuracy has been evaluated in Input 4.7.1. Per Input 4.7.1, the DAC accuracy for the ATM is ± 0.151% span. Therefore:

$C_{ATM} = \pm 0.151\%$ span (3σ)

Converting to psig:

$C_{ATM} = \pm 0.151\%$ Span * 1200 psig

$C_{ATM} = \pm 1.8120$ psig **(3σ)**

7.5.3 Calibration Standard Error (C_{STD}):

Per Assumption 2.9, Calibration Standard Error is considered negligible for the purposes of this analysis.

$C_{STD} = 0$

7.5.4 Loop Calibration Error (C_L):

Per Section 8.2 of Input 4.2.1, the loop calibration for 1B21N076A-D and 1B21N676A-D is performed using a pressure gauge only. Therefore, from Section 7.5.2.1, C_i for the loop will be C_{PG}. From Section 7.3.2:

$$C_L = \pm N\sqrt{\sum\left(\frac{ALT_i}{n}\right)^2 + \sum\left(\frac{C_i}{n}\right)^2 + \sum\left(\frac{C_iSTD}{n}\right)^2}$$

Where:

ALT_i = As-Left Tolerance for Loop or ALT_L
C_i = Calibration Error
C_iSTD = Calibration Standard Error

From above:

ALT_L	$= \pm 4.0$ psig	(2σ)	Section 7.5.1
C_{PG}	$= \pm 0.0813\%$ span * 1200 psig		
	$= \pm 0.9756$ psig	(3σ)	Section 7.5.2.1
C_iSTD	$= 0$		Section 7.5.3

Substituting terms for the 1B21N076A-D and 1B21N676A-D loop:

$$C_L = \pm 2\sqrt{\left(\frac{4.0\ psig}{2}\right)^2 + \left(\frac{0.9756\ psig}{3}\right)^2 + 0^2}$$

$C_L = \pm 4.0525$ psig **(2σ)**

7.6 Loop Drift

7.6.1 Pressure Transmitter Drift (D_{PT}):

Per Input 4.3.3, Drift (Stability) is ± 0.20% of URL for 30 months for the Rosemount 1152GP9E transmitters. Per Input 4.3.1, Drift is also ± 0.20% of URL for 30 months for the Rosemount 1153GB9P transmitters. Drift will be determined based on a nominal 24-month calibration interval (Assumption 2.7). Technical Specifications allow for the surveillance to be delayed for up to 1.25% of the required interval, or 30 months (24*1.25=30). Inputs 4.10.4 and 4.10.5 show the calibrated span as 0 – 1200 psig. Inputs 4.3.1 and 4.3.2 show the URL as 3000 psig. Therefore:

$D_{PT} = \pm 0.20\% * \text{URL}$
$D_{PT} = \pm 0.20\% * 3000 \text{ psig}/1200 \text{ psig}$
$D_{PT} = \pm 0.50\% \text{ span}$

Converting to psig:

$D_{PT} = \pm 0.50\% \text{ span} * 1200 \text{ psig}$
$\mathbf{D_{PT} = \pm 6.0000 \text{ psig}}$ **(2σ)**

7.6.2 Analog Trip Module Drift (D_{ATM}):

Per Input 4.10.1, Drift is ± 0.25% of Span for a period of 30 days. Per the calibration procedure (Output 5.2.6), the calibration frequency is 92 days. Technical Specifications allow for the surveillance to be delayed for up to 1.25% of the required interval, or 115 days (92*1.25=115). Therefore, per Eqn. 2 of Ref. 6.1:

$D_{ATM} = \pm 0.25\% * (115 \text{ days}/30 \text{ days})^{1/2}$

$\mathbf{D_{ATM} = \pm 0.4895\% \text{ Span}}$ **(2σ)**

Converting to psig:

$D_{ATM} = \pm 0.4895\% \text{ Span} * 1200 \text{ psig}$

$\mathbf{D_{ATM} = \pm 5.8740 \text{ psig}}$ **(2σ)**

7.6.3 Loop Drift (D_L):

From Section 7.3.3, Loop Drift is calculated:

$$D_L = \pm N \sqrt{\left(\frac{D_1}{n}\right)^2 + \left(\frac{D_2}{n}\right)^2 + \ldots + \left(\frac{D_n}{n}\right)^2} \qquad (2\sigma)$$

Substituting terms for the 1B21N076A-D and 1B21N676A-D loop:

$$D_L = \pm N \sqrt{\left(\frac{D_{PT}}{n}\right)^2 + \left(\frac{D_{ATM}}{n}\right)^2}$$

$$D_L = \pm 2 \sqrt{\left(\frac{6.0\ psig}{2}\right)^2 + \left(\frac{5.8740\ psig}{2}\right)^2}$$

$D_L = \pm 8.3967$ psig (2σ)

7.7 Process Measurement Accuracy (PMA):

The Main Steam Line Pressure-Low process is sensed through instrument lines connected to the main steam line header. Because of the steam pressure process being measured, the PMA effects associated with these transmitters are negligible. The change in density of the steam within the sensing lines is insignificant as compared to the high pressures being monitored. The instrument lines are installed with a slope that drains back into the transmitters. The slope keeps the sensing line full of water/condensate, which would therefore minimize PMA effects. This is consistent with Input 4.9, which assumes the PMA to be zero. Therefore, the PMA is considered negligible.

PMA = 0

7.8 Primary Element Accuracy (PEA):

The transmitter associated with this loop is in direct contact with the process. There is no primary measurement element such as a flow orifice. This is consistent with Input 4.9, which assumes the PEA to be zero. Hence, PEA is not included in the transmitter error evaluation. Therefore:

PEA = 0

8.0 RESULTS

8.1 Calculation of the Nominal Trip Setpoint (NTSP)

From Section 7.3.4;

For process variables that increase to trip.

$$NTSP_{INC} = AL - \left(\frac{1.645}{2}\right)\sqrt{A_L^{\,2} + C_L^{\,2} + D_L^{\,2} + PMA^2 + PEA^2} - B$$

For process variables that decrease to trip.

$$NTSP_{DEC} = AL + \left(\frac{1.645}{2}\right)\sqrt{A_L^{\,2} + C_L^{\,2} + D_L^{\,2} + PMA^2 + PEA^2} + B$$

From Input 4.10.2, this function has an Analytical Limit of 825 psig. The Main Steam Line Pressure - Low Analytical Limit ensures that the RPV temperature change limit of 100°F per hour is not reached, and that excessive RPV depressurization will not occur in the event of a pressure regulator failure

Substituting into the equation for $NTSP_{(DEC)}$ where:

AL	= 825 psig		Input 4.10.2
Calibrated Span	= 1200 psig		Section 7.4.1
A_L	= ± 1.5708% Span	(2σ)	Section 7.4.3
	= ± 1.5708% Span * 1200 psig		
	= ± 18.8496 psig		
D_L	= ± 8.3967 psig	(2σ)	Section 7.6.3
C_L	= ± 4.0525 psig	(2σ)	Section 7.5.4
PMA	= 0		Section 7.7
PEA	= 0		Section 7.8
B	= 0		Section 7.4.1.10

$$NTSP_{(DEC)} = AL + \left(\frac{1.645}{N}\right)\sqrt{A_L^{\,2} + C_L^{\,2} + D_L^{\,2} + PMA^2 + PEA^2} \pm B$$

$$NTSP_{(DEC)} = 825\,psig + \left(\frac{1.645}{2}\right)\sqrt{\begin{array}{l}18.8496\,psig^2 + 8.3967\,psig^2 + 4.0525\,psig^2 \ldots \\ +0^2 + 0^2\end{array}} \pm 0$$

$$NTSP_{(DEC)} = 842.2967\,psig$$

The current setpoint in the CPS Operational Requirements Manual (Output 5.1.1) Table 7 (Item 1.b), is ≥ 849 psig, which is more conservative than the setpoint calculated above. Thus, the recommendation is to utilize an NTSP of 849 psig and delete the "≥" sign. Therefore:

NTSP = 849 psig

8.2 Calculation of As-Found Values

From Section 7.3.6:

$$AFT_i = \pm(N)\sqrt{\left(\frac{ALT_i}{n}\right)^2 + \left(\frac{D_i}{n}\right)^2 + \left(\frac{C_i}{n}\right)^2} \qquad (2\sigma)$$

Where:

ALT_i = device's As-Left Tolerance
D_i = device's drift value
C_i = errors of M&TE used to calibrate the device

The loop As-Found Tolerance (AFT) will be calculated as follows:

$$AFT_L = \pm(N)\sqrt{\left(\frac{C_L}{n}\right)^2 + \left(\frac{D_L}{n}\right)^2} \qquad (2\sigma)$$

Where:

D_L = Loop devices' drift value, as defined in Section 7.3.3
C_L = Loop devices' calibration effect, as defined in Section 7.3.2

8.2.1 As-Found Tolerance (AFT_{PT}) for Transmitters 1B21N076A-D

From above:

Calibrated Span	= 1200 psig		Section 7.4.1
ALT_{PT}	= ± 0.25% span	(2σ)	Section 7.5.1
D_{PT}	= ± 0.50% span	(2σ)	Section 7.6.1
C_{PT}	= ± 0.1268% span	(3σ)	Section 7.5.2.1

Substituting:

$$AFT_{PT} = \pm N\sqrt{\left(\frac{ALT_{PT}}{n}\right)^2 + \left(\frac{D_{PT}}{n}\right)^2 + \left(\frac{C_{PT}}{n}\right)^2}$$

$$AFT_{PT} = \pm 2\sqrt{\left(\frac{0.25\%span}{2}\right)^2 + \left(\frac{0.50\%span}{2}\right)^2 + \left(\frac{0.1268\%span}{3}\right)^2}$$

AFT_{PT} = ± 0.5654% span (2σ)

8.2.2 As-Found Tolerance (AFT_{ATM}) for ATMs 1B21N676A-D

From above:

Calibrated Span	= 1200 psig		Section 7.4.1
ALT_{ATM}	= ± 0.25% span	(2σ)	Section 7.5.2.2
	= ± 0.2500% span * 1200 psig		
	= ± 3.0000 psig		
D_{ATM}	= ± 5.8740 psig	(2σ)	Section 7.6.2
C_{ATM}	= ± 1.8120 psig	(3σ)	Section 7.5.2.2

Substituting:

$$AFT_{ATM} = \pm N\sqrt{\left(\frac{ALT_{ATM}}{n}\right)^2 + \left(\frac{D_{ATM}}{n}\right)^2 + \left(\frac{C_{ATM}}{n}\right)^2}$$

$$AFT_{ATM} = \pm 2\sqrt{\left(\frac{3.0\,psig}{2}\right)^2 + \left(\frac{5.8740\,psig}{2}\right)^2 + \left(\frac{1.8120\,psig}{3}\right)^2}$$

AFT_{ATM} = ± 6.7055 psig (2σ)

Per Ref. 6.1, AFT is rounded to the procedure precision. Therefore:

$$\mathbf{AFT_{ATM} = \pm 6\ psig} \qquad (2\sigma)$$

8.2.3 As-Found Tolerance (AFT_L) for the 1B21N076A-D and 1B21N676A-D Loop

From Section 7.3.6, the loop As-Found Tolerance (AFT) will be calculated as follows:

$$AFT_L = \pm(N)\sqrt{\left(\frac{C_L}{n}\right)^2 + \left(\frac{D_L}{n}\right)^2}$$

From above:

Calibrated Span	= 1200 psig		Section 7.4.1
D_L	= ± 8.3967 psig	(2σ)	Section 7.6.3
C_L	= ± 4.0525 psig	(2σ)	Section 7.5.4

Substituting:

$$AFT_L = \pm(2)\sqrt{\left(\frac{8.3967\ psig}{2}\right)^2 + \left(\frac{4.0525\ psig}{2}\right)^2}$$

AFT_L = ± 9.3235 psig (2σ)

Per Ref. 6.1, AFT is rounded to the procedure precision. Therefore:

$$\mathbf{AFT_L = \pm 9\ psig} \qquad (2\sigma)$$

8.3 Calculation of the Allowable Value (AV)

The Allowable Value may be calculated for an increasing trip as follows:

$$\mathbf{AV_{(INC)} = NTSP + AFT_L}$$

The Allowable Value may be calculated for a decreasing trip as follows:

$$\mathbf{AV_{(DEC)} = NTSP - AFT_L}$$

Where:

$NTSP_{(DEC)}$	= 849 psig	Section 8.1
AFT_L	= ± 9 psig	Section 8.2.3

Substituting into the equation for a decreasing setpoint:

$AV_{(DEC)} = NTSP - AFT_L$
$AV_{(DEC)} = 849 \text{ psig} - 9 \text{ psig}$
$AV_{(DEC)} = 840 \text{ psig}$

The current AV documented in Input 4.10.2 and Reference 6.3.1 is ≥ 837 psig, which is less conservative than the value calculated in this section. Thus, the recommendation is to utilize an AV of ≥ 840 psig. Therefore:

AV ≥ 840 psig **(2σ)**

8.4. Calculation of Reset Value

The trip reset value is selected to prevent overlap with the acceptable NTSP tolerance band, and also to prevent interference with normal plant operations. The maximum reset value is calculated as follows for the Main Steam Line Pressure - Low function:

Reset ≥ NTSP + AFT_L

Reset ≥ 849 psig + 9 psig
Reset ≥ 858 psig

A review of Inputs 4.2.2, 4.2.3, 4.2.4 and 4.2.5 document the existing reset value is 885 psig, which is 36 psig above the NTSP (849 psig). This is a difference of +3%, which equals the standard differential used for ATMs at CPS. The minimum reset differential derived from AFT_L is 858 psig; the 36 psig existing differential is greater and therefore conservative.

Reset = 885 psig

9.0 CONCLUSIONS

This calculation determined a NTSP of 842.2967 psig for Main Steam Line Pressure - Low function. The existing ORM setpoint of ≥ 849 psig is more conservative than the calculated setpoint. Therefore, the recommendation is to retain the setpoint at:

NTSP = 849 psig **(2σ)**

The Allowable Value determined by this calculation is ≥ 840 psig. The existing AV of ≥ 837 psig is less conservative than the calculated AV. Therefore, the recommendation is to establish the AV at:

AV ≥ 840 psig **(2σ)**

The scaling for Main Steam Line Pressure Low is addressed in Attachment 1 to this calculation. A "Results Summary" is included in Attachment 2 to this calculation to provide a summary. Documentation of the transmitter elevations for scaling purposes is included in Attachment 3.

FIGURE 1 – MAIN STEAM LINE PRESSURE-LOW FUNCTION

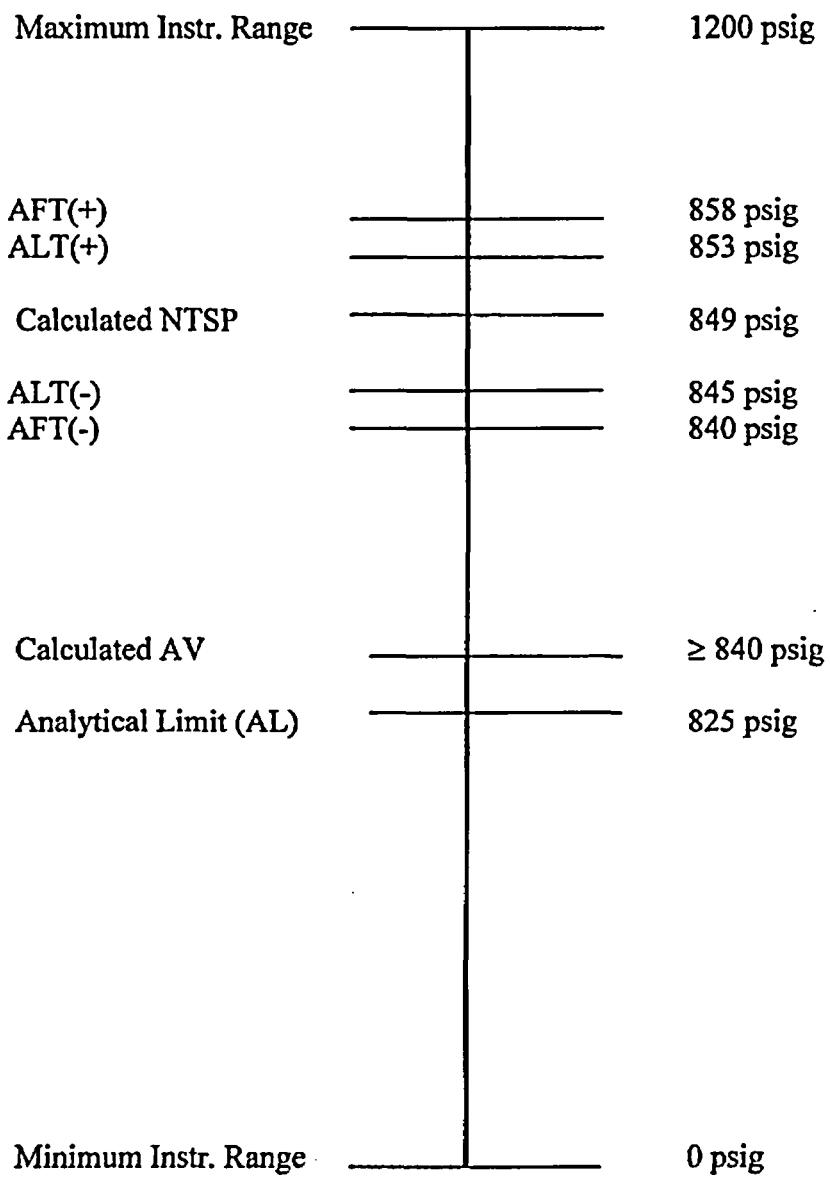

SCALING OF THE MAIN STEAM LINE PRESSURE LOW INSTRUMENT LOOP

1 **Transmitters**

1B21N076A-D

Manufacturer: Rosemount Inc.
Model No.: 1152GP9E/1153GB9P
Input: 0-1200 psig
Output: 4-20 mAdc; (1-5 Vdc measured across precision 250 Ω resistor)

Process Range

Min (p)	Max (P)	Units
p= 0	P= 1200	psig

Transmitter Output Range

Min (o)	Max (O)	Units
o=1	O=5	Vdc

There is a head correction that must be accounted for given the transmitter elevation and the elevation of its associated pressure tap. Per Inputs 4.5.1, 4.5.2, 4.5.3, 4.5.4, 4.5.5, 4.5.6, 4.5.7 and Attachment 3, the following are the elevations of the pressure taps and transmitter diaphragms:

<u>1B21N076A:</u>

Transmitter Taps	Elevation =	793.885' (PT1)
Transmitter in Turbine Building	Elevation =	774.020' (XT1)

<u>1B21N076B:</u>

Transmitter Taps	Elevation =	794.250' (PT2)
Transmitter in Turbine Building	Elevation =	766.660' (XT2)

1B21N076C:

Transmitter Taps Elevation = 793.302' (PT3)

Transmitter in Turbine Building Elevation = 766.630' (XT3)

1B21N076D:

Transmitter Taps Elevation = 794.698' (PT4)

Transmitter in Turbine Building Elevation = 774.020' (XT4)

The specific volume of the condensate in the transmitter sense lines is determined by the normal ambient temperature limits in the Turbine Building environmental areas (65°F - 104°F for 1B21N076A,D and 65°F - 122°F for 1B21N076B,C). A review of the Steam Tables (Ref. 6.6) determined the change in condensate specific volume, between the maximum and minimum environmental limits, results in a head correction variation of approximately 0.1 psi. Therefore, due to the minimal impact of the head variations, this analysis will utilize the median ambient Turbine Building temperature of 86°F (1B21N076A,D) and 94°F (1B21N076B,C) to determine the specific volume of the condensate in the Main Steam Line Pressure -Low transmitter sense lines.

"SV1" and "SV2" are the specific volumes of water in the instrument sensing lines based on Main Steam Line normal operating pressure (1025 psig) and Turbine Building temperature (86°F and 94°F). The specific volumes of water at 86°F and 1025 psig and 94°F and 1025 psig are obtained by interpolating information found in Steam Tables (Ref. 6.6). Since 1025 psig is approximately 1040 psia (1025 psig + 14.7 psi = 1039.7 psia), from Steam Tables for Superheated Steam and Compressed Water (Ref. 6.6, Table 3);

Volume, SV, ft^3/lbm		
Press, psia	1000	1050
Temp, F		
100	0.01608	0.01608
90	0.01605	0.01605
80	0.01602	0.01602

By inspection of the information from the steam tables, volumes for 100°F, 90°F and 80°F are constant (within the precision of the steam tables) for pressures between 1000 and 1050 psia. Therefore, interpolating for the volume at 86°F:

$$SV1 = ((86^{o}F-80^{o}F)/(90^{o}F-80^{o}F) * (0.01605\ ft^3/lbm - 0.01602\ ft^3/lbm)) + 0.01602\ ft^3/lbm$$
$$SV1 = 0.01604\ ft^3/lbm$$

Similarly, interpolating for the volume at 94°F:

$$SV2 = ((94^{o}F-90^{o}F)/(100^{o}F-90^{o}F) * (0.01608\ ft^3/lbm - 0.01605\ ft^3/lbm)) + 0.01605\ ft^3/lbm$$
$$SV2 = 0.01606\ ft^3/lbm$$

Therefore, this calculation will utilize a conservative specific volume of 0.01604 ft^3/lbm for 86°F water and a conservative specific volume of 0.01606 ft^3/lbm for 94°F water.

The head difference is determined as follows:

<u>1B21N076A:</u>

(PT1 – XT1)/SV/144

$$\frac{(793.885 - 774.02)/0.01604}{144}$$

1B21N076A head = 8.6005 psig

<u>1B21N076B:</u>

(PT2 – XT2)/SV/144

$$\frac{(794.250 - 766.66)/0.01606}{144}$$

1B21N076B head = 11.9301 psig

<u>1B21N076C:</u>

(PT3 – XT3)/SV/144

$$\frac{(793.302 - 766.63)/0.01606}{144}$$

1B21N076C head = 11.5331 psig

1B21N076D:

(PT4 – XT4)/SV/144

$$\frac{(794.698 - 774.02)/0.01604}{144}$$

1B21N076C head = 8.9524 psig

The 8.6005 psig and 8.9524 psig head corrections are rounded for readability to 9 psig, and the 11.9301 psig and 11.5331 psig head corrections are rounded for readability to 12 psig. Thus, when the main steam line pressure is actually 0, the 1B21N076A,D transmitters will "see" 9 psig of head, and the 1B21N076B,C transmitters will "see" 12 psig of head. Similarly, when the actual main steam line pressure reaches the upper span of 1200 psig, the 1B21N076A,D transmitters will "see" 1209 psig of head, and the 1B21N076B,C transmitters will "see" 1212 psig of head. Thus, the corrected range of the 1B21N076A,D transmitters is 9 to 1209 psig, and the corrected span of the 1B21N076B,C transmitters is 12 to 1212 psig.

2 **Analog Trip Modules (ATMs)**

1B21N676A,B

Manufacturer: General Electric
Model: 147D8505G001

1B21N676C,D

Manufacturer: General Electric
Model: 147D8505G005

Input: 4-20 mAdc; (1.000 - 5.000 Vdc measured across precision 250 Ω resistor)
Output: discrete trip signal

3 Main Steam Line Pressure- Low Setpoint

From above:

NTSP	= 849 psig	(Section 8.1)
AV	= ≥840 psig	(Section 8.3)
Reset	= 885 psig	(Section 8.4)
Maximum Process Range (P)	= 1200 psig	(Attachment 1)
Minimum Process Range (p)	= 0 psig	(Attachment 1)
Head Correction (HC)	= 9 psi (1B21N076A,D)	
	= 12 psi (1B21N076B,C)	
Minimum Transmitter Output (o)	= 4mA = 1 Vdc	
Maximum Transmitter Output (O)	= 20 mA = 5 Vdc	

Tolerances:

ALT_{PT}	= ± 0.2500% (4 Vdc/100% Span) = ± 0.010 Vdc	(Section 7.5.1)
ALT_{ATM}	= ± 3 psig	(Section 7.5.1)
ALT_L	= ± 4 psig	(Section 7.5.1)
AFT_{PT}	= ± 0.5654% (4 Vdc/100% Span) = ± 0.023 Vdc	(Section 8.2.1)
AFT_{ATM}	= ± 6 psig	(Section 8.2.2)
AFT_L	= ± 9 psig	(Section 8.2.3)

1B21N076A,D - Transmitter Calibration

Cal. Pt.	Input	Output (volts DC)	
	psig	AFT ±0.023 Vdc	ALT ±0.010 Vdc
0%	9	1.000 (0.977 to 1.023)	1.000 (0.990 to 1.010)
25%	309	2.000 (1.977 to 2. 023)	2.000 (1.990 to 2.010)
50%	609	3.000 (2.977 to 3. 023)	3.000 (2.990 to 3.010)
75%	909	4.000 (3.977 to 4. 023)	4.000 (3.990 to 4.010)
100%	1209	5.000 (4.977 to 5. 023)	5.000 (4.990 to 5.010)

1B21N076B,C - Transmitter Calibration

Cal. Pt.	Input	Output (volts DC)	
	psig	AFT ±0.023 Vdc	ALT ±0.010 Vdc
0%	12	1.000 (0.977 to 1.023)	1.000 (0.990 to 1.010)
25%	312	2.000 (1.977 to 2. 023)	2.000 (1.990 to 2.010)
50%	612	3.000 (2.977 to 3. 023)	3.000 (2.990 to 3.010)
75%	912	4.000 (3.977 to 4. 023)	4.000 (3.990 to 4.010)
100%	1212	5.000 (4.977 to 5. 023)	5.000 (4.990 to 5.010)

1B21N676A, B, C, D - ATM Calibration

Cal. Pt.	Input	Output (psig)	
	psig	AFT	ALT
		(± 6 psi)	(± 3 psi)
Allow. Value	≥ 840	≥ 840 psig	≥ 840 psig
Setpoint	849	849 psig (843 to 855)	849 psig (846 to 852)
Reset	885	885 psig (879 to 891)	885 psig (882 to 888)

1B21N076A,D & 1B21N676A,D - Loop Calibration

Cal. Pt.	Input	Output (psig)	
	psig[1]	AFT	ALT
		(± 9 psi)	(± 4 psi)
Allow. Value	≥ 849	≥ 849 psig	≥ 849 psig
Setpoint	858	858 psig (849 to 867)	858 psig (854 to 862)
Reset	894	894 psig (885 to 903)	894 psig (890 to 898)

[1]Inclusive of 9-psig head correction.

1B21N076B,C & 1B21N676B,C - Loop Calibration

Cal. Pt.	Input	Output (psig)	
	Psig[2]	AFT	ALT
		(± 9 psi)	(± 4 psi)
Allow. Value	≥ 852	≥ 852 psig	≥ 852 psig
Setpoint	861	861 psig (852 to 870)	861 psig (857 to 865)
Reset	897	897 psig (888 to 906)	897 psig (893 to 901)

[2]Inclusive of 12-psig head correction.

RESULTS SUMMARY

The following tables list the applicable results of this calculation:

Primary Sensor Scaling/Calibration					
Primary Sensor	Calibration Span				
	0%	25%	50%	75%	100%
1B21N076A,D	9 psig	309 psig	609 psig	909 psig	1209 psig
1B21N076B,C	12 psig	312 psig	612 psig	912 psig	1212 psig

Individual Component Setting Tolerances (Device Settings Only)		
Component EIN	As-Found	As-Left
1B21N076A-D	± 0.023 Vdc	± 0.010 Vdc
1B21N676A-D	± 6 psig	± 3 psig

Trip Setpoint and Loop Setting Tolerances (Loop Settings Only – Inclusive of Head Correction)			
Component EIN	Setpoint/Reset (psig)	As-Found	As-Left
1B21N676A,D	858 psig – setpoint	± 9 psig	± 4 psig
1B21N676B,C	861 psig – setpoint	± 9 psig	± 4 psig
1B21N676A,D	894 psig - reset	± 9 psig	± 4 psig
1B21N676B,C	897 psig - reset	± 9 psig	± 4 psig

Loop Calibration - Allowable Value (inclusive of Head Correction)	
Component EIN	Allowable Value
1B21N676A,D	≥ 849 psig
1B21N676B,C	≥ 852 psig

M&TE Used In Calculation (if specified in calculation)			
Manufacturer	Model Number	Range	Total Accuracy (Eng. Units)
1B21N076A-D and 1B21N676A-D			
Heise	Digital Heise Model ST-2H Indicator Assembly with the HQS-2 1500 psig module installed (or equivalent)	0 - 1500 psig	±0.9750 psi Temp band of (20°F to 120°F)
Fluke	45 (or equivalent)	Range appropriate to measure 1-5 Volts (slow resolution)	±0.004 Vdc
Precision Resistor	NA	250 Ω	0.02 Ω

FSAR/Technical Specification Setpoints		
Component EIN	Allowable Value/ Design Setpoint	FSAR/Technical Specification Section
1B21N076A-D 1B21N676A-D	≥ 840 psig / 849 psig	Tech. Spec. Table 3.3.6.1-1 Item 1.b ORM Table 7, Item 1.b

Letter CPS-TTI-0069
File No. B99-00(12-21)-L
December 21, 2000

Tabulation of Pressure Transmitter Elevations
(4 Pages Attached)

Ameren
Clinton Power Station

December 21, 2000
CPS-TTI-0069
B99-00(12-21)-L

Mr. Brian M. Haynes
Terran Technologies, Inc.
1901 So. 6th Street
Omaha, NE. 68108

Subject: Walk Down Information

Dear Mr. Haynes:

The purpose of this correspondence is to formally transmit CPS walk down information for the attached transmitters. This walk down information was obtained to support development of the following calculations:

IP-C-0087 (First Priority)	IP-C-0094
IP-C-0062 (First Priority)	IP-C-0071
IP-C-0084 (First Priority)	IP-C-0073
IP-C-0070 (First Priority)	IP-C-0066
IP-C-0067 (First Priority)	IP-C-0060
IP-C-0076	IP-C-0064 (Previously Provided)
IP-C-0058	IP-C-0077 (Previously Provided)
IP-C-0059	IP-C-0083 (Previously Provided)

Construction Work Requests (CWR) 12330 and 12339 provide specific transmitter centerline elevation data in instrument racks 1H22P004, 1H22P027, 1H22P005 and 1H22P026. Transmitter centerline data obtained in each CWR was verified using known benchmark elevations. The majority of transmitters in the attached listing were not included in either CWR.

The transmitters on the attached listings are annotated as being in the upper or lower row of the rack. Each instrument rack's row elevation is assumed to be equivalent to the centerline elevation of the individual transmitters recorded in the CWRs. In the cases where several transmitter elevations from the same row were recorded in the CWRs, the elevations were averaged and these values were used to specify the transmitter centerline elevation. This assumption is valid since the walk downs performed in support of this letter confirmed that all transmitters in the same row for a given rack, are very close to the same elevation. Any differences in elevation were not discernable by inspection or by measuring from floor or grating elevation to transmitter centerline. The transmitters that were included in the CWR survey are listed by the CWR they were surveyed in.

This approach will provide the most accurate means of providing transmitter centerline elevation data. In this regard, the information previously provided by letter CPS-TTI-0057 is superceded by this letter.

Some of the transmitters walked down were not included in the surveys conducted by the CWRs. In these cases, centerline measurements were recorded and added to the top of floor or grating elevations to derive the transmitter centerline elevations.

If you have any questions regarding this matter please feel free to contact myself at extension 3442 or Steve Kolelf at extension 4031.

John W. Smith

J.W. Smith, Project Manager
NSED C&I Design Engineering

Transmitter Walk Down Data (Racks 1H22P004, P027, P005 and P0026)

Transmitter	Engineers Performing Walkdown	Building	Instrument Location	Floor Elev.	Height of center line above floor or rack row	Transmitter Centerline Elevation
1B21N078A	WK/WW	Containment	1H22P004	755'	Upper Row	758.93'
1B21N097A	WK/WW	Containment	1H22P004	755'	Upper Row	758.93'
1B21N080A	WK/WW	Containment	1H22P004	755'	Lower Row	756.96'
1B21N095A	N/A	Containment	1H22P004	755'	CWR 12330	CWR 12330
1B21N081A	WK/WW	Containment	1H22P004	755'	Upper Row	758.93'
1B21N091A	WK/WW	Containment	1H22P004	755'	Lower Row	756.96'
1B21N091E	WK/WW	Containment	1H22P004	755'	Lower Row	756.96'
1E12N062A	WK/WW	Containment	1H22P004	755'	Lower Row	756.96'
1E12N062C	WK/WW	Containment	1H22P004	755'	Lower Row	756.96'
1B21N094A	WK/WW	Containment	1H22P004	755'	Upper Row	758.93'
1B21N094E	WK/WW	Containment	1H22P004	755'	Upper Row	758.93'
1C71N050A	WK/WW	Containment	1H22P004	755'	Upper Row	758.93'
1B21N078B	WK/WW	Containment	1H22P027	755'	Upper Row	758.86'
1B21N097B	N/A	Containment	1H22P027	755'	CWR 12330	CWR 12330
1B21N080B	WK/WW	Containment	1H22P027	755'	Lower Row	756.93'
1B21N095B	N/A	Containment	1H22P027	755'	CWR 12339	CWR 12339
1B21N081B	WK/WW	Containment	1H22P027	755'	Upper Row	758.86'
1B21N091B	WK/WW	Containment	1H22P027	755'	Lower Row	756.93'
1B21N091F	WK/WW	Containment	1H22P027	755'	Lower Row	756.93
1E12N062B	WK/WW	Containment	1H22P027	755'	Upper Row	758.86'
1E12N062D	WK/WW	Containment	1H22P027	755'	Upper Row	758.86'
1B21N094B	WK/WW	Containment	1H22P027	755'	Upper Row	758.86'
1B21N094F	WK/WW	Containment	1H22P027	755'	Upper Row	758.86'
1C71N050B	WK/WW	Containment	1H22P027	755'	Upper Row	758.86'
1B21N078C	WK/WW	Containment	1H22P005	754'2"	Lower Row	756.81'
1B21N080C	N/A	Containment	1H22P005	754'2"	CWR 12330	CWR 12330
1B21N073C	WK/WW	Containment	1H22P005	754'2"	Upper Row	758.77'
1B21N073G	N/A	Containment	1H22P005	754'2"	CWR 12330	CWR 12330
1B21N081C	WK/WW	Containment	1H22P005	754'2"	Upper Row	758.77'
1B21N067C	N/A	Containment	1H22P005	754'2"	CWR 12339	CWR 12339
1B21N067G	WK/WW	Containment	1H22P005	754'2"	Lower Row	756.81'
1C71N050C	WK/WW	Containment	1H22P004	754'2"	Lower Row	756.81'
1B21N078D	WK/WW	Containment	1H22P026	755'	Lower Row	756.91
1B21N080D	N/A	Containment	1H22P026	755'	CWR 12330	CWR 12330
1B21N073D	N/A	Containment	1H22P026	755'	CWR 12339	CWR 12339
1B21N073H	WK/WW	Containment	1H22P026	755'	Upper Row	758.88
1B21N081D	WK/WW	Containment	1H22P026	755'	Upper Row	758.88
1B21N067D	WK/WW	Containment	1H22P026	755'	Lower Row	756.91
1B21N067H	WK/WW	Containment	1H22P026	755'	Lower Row	756.91
1C71N050D	N/A	Containment	1H22P026	755'	CWR 12330	CWR 12330

Transmitter Walk Down Data (Remaining Instruments)

Transmitter	Engineers Performing Walkdown	Building	Instrument Location	Floor Elev.	Height of center Line above floor or CWR row	Transmitter Elevation
71B21N400A	WK/WW	Containment	SPS-100	755'	27.75"	757.31'
1B21N400B	N/A	Containment	SPS-101	754'2"	CWR 12339	CWR 12339
1B21N400E	WK/WW	Containment	SPS-102	755'	28.25"	757.35'
1B21N400F	WK/WW	Containment	SPS-103	755'	28"	757.33'
1C71N052A	WK/WW	Turbine	N-104	762'	36.25"	765.02'
1C71N052B	WK/WW	Turbine	K-122	762'	56.25"	766.69'
1C71N052C	WK/WW	Turbine	N-104	762'	56.25"	766.69'
1C71N052D	WK/WW	Turbine	K-122	762'	56.25"	766.69'
1B21N076A	WK/WW	Turbine	N-112	769.5'	54.25"	774.02'
1B21N076B	WK/WW	Turbine	N-119	762'	55.88"	766.66'
1B21N076C	WK/WW	Turbine	M-106	762'	55.5	766.63'
1B21N076D	WK/WW	Turbine	N-109	769.5'	54.25	774.02'
1E22N055C	WK/WW	Fuel	AH-116	737'	48.75	741.06'
1E22N055G	WK/WW	Fuel	AH-116	737'	48.75	741.06'

Revised Walk Down Data (Previously Provided by CPS-TTI-0067)

Transmitter	Engineers Performing Walkdown	Building	Instrument Location	Floor Elev.	Height of center Line above floor or CWR row	Transmitter Elevation
1E12N055A	WK/WW	Aux. Bldg	1H22P018	707' 6"	46.25"	711.35'
1E12N055C	WK/WW	Aux. Bldg	1H22P055	707' 6"	22.5"	709.38'
1B21N068A	WK/WW	Containment	1H22P004	755'	CWR 12330	CWR 12330
1B21N068E	WK/WW	Containment	1H22P004	755'	Upper Row	758.93'
1B21N401A	WK/WW	Containment	SPS-100	755'	48.75"	759.1'
1B21N401B	WK/JB	Containment	SPS-101	754'2"	32.25"	756.85
1B21N068B	WK/JA	Containment	1H22P027	755'	Upper Row	758.86'
1B21N068F	WK/JA	Containment	1H22P027	755'	Upper Row	758.86'
1B21N401E	WK/JA	Containment	SPS-102	755'	49"	759.08'
1B21N401F	WK/JA	Containment	SPS-103	755'	48.75"	759.06'

Walk downs performed by:

W.S. Koleff [signature] / 12/21/00 J. Brannon [signature] / 12/01/2000

W. White Warren C. White / 12/21/00 J. Ashcraft [signature] / 12/21/00
for J. Ashcraft
per Telecon.

ATTACHMENT 4
Rosemount Report D8900126, Revision A

(19 Pages Attached)

JAN-15-2001 10:22 ROSEMOUNT NUCLEAR 6128288200 P.01

ROSEMOUNT INC.
12001 Technology Drive
Eden Prairie, MN 55344 U.S.A.
(612) 941-5560
TWX: 4310012 or 4310024
FAX: (612) 828-3088

Rosemount

NUCLEAR OPERATIONS GROUP

30 MONTH STABILITY SPECIFICATION FOR
ROSEMOUNT MODEL 1152, 1153 AND 1154
PRESSURE TRANSMITTERS
ROSEMOUNT REPORT D8900126
REVISION A.

Originated By Ian Baldry Date 1/18/90
Ian Baldry - Design Engineer

Approved by Eng. Mark W Rasong Date 2/23/90
Mark Rasong - Nuclear Operations Manager

Approved by Q.A. Jim Hanshaw Date 2/13/90
Jim Hanshaw - Quality Assurance

Post-it® Fax Note 7671	Date	# of pages ▶
To Jim Brannen	From Bob Cleveland	
Co./Dept. Clinton NPS	Co. RMII	
Phone #	Phone # 8255	
Fax # 217-935-3191	Fax # 952-828-8280	

JAN-16-2001 10:22 ROSEMOUNT NUCLEAR 6128288444 P.02

REVISION STATUS

ROSEMOUNT REPORT D8900128

30 MONTH STABILITY SPECIFICATION FOR ROSEMOUNT MODEL 1152, 1153 AND 1154 TRANSMITTERS

REV	PAGE	PARAGRAPH	CHANGE DESCRIPTION	ENG APP	ENG SUPV APP	QA APP	MKTG APP	EFFECTIVE DATE
A	1-15	All	Original Release	1/18/90	2/23/90	2/12/90	1/31/90	2/26/90

JAN-16-2001 10:23 ROSEMOUNT NUCLEAR 6128288280 P.03

REVISION STATUS SHEET

DOCUMENT NUMBER D8900126

DOCUMENT TITLE 30 Month Stability Specification for Rosemount Model 1152, 1153 and 1154 Pressure Transmitters

REVISION	CHANGE/DESCRIPTION	PAGE/PARAGRAPH	APPROVED BY.	DATE
A	See following page			

Form No. 60122 Rev. A

TABLE OF CONTENTS

		PAGE
1.0	SCOPE	1
2.0	REFERENCES	1
3.0	TEST DESCRIPTION	1
4.0	CONCLUSION	15

30 MONTH STABILITY SPECIFICATION FOR

ROSEMOUNT MODEL 1152, 1153 AND 1154 PRESSURE TRANSMITTERS

ROSEMOUNT REPORT D8900126

REVISION A

1.0 SCOPE

This report documents the testing that was performed to demonstrate the new stability specification of ±0.2% URL for 30 months for Rosemount Model 1152, 1153 and 1154 transmitters. The former specification of ±0.25% URL for 6 months, including accuracy, was based on test results from the Model 1151 (Ref. 2.1). The new specification does not include accuracy.

2.0 REFERENCES

The revision level of the reference listed below were current at the time of release of this report.

2.1 Rosemount Report 78223, Revision A. "Long Term Test Results for Pressure Transmitters Rosemount Model 1151."

3.0 TEST DESCRIPTION

Test units consisted of four 1153 Series B transmitters, model number 1153GB6PA and serial numbers 402720, 402721, 402722, 402723, all calibrated 0 to 100 psig.. The transmitters were powered with 34 V and output voltage of the transmitter was measured over a 500 ohm resistor. Response of the transmitter to an input pressure of 50 psi ±3 psi was recorded daily for the first week of the test, weekly for the next six months, and monthly for the duration of the test. Ambient temperature was also recorded. Calibration checks at 20% span increments were made between 0 and 100% span at the beginning and end of the test.

The test was originally scheduled to run 18 months. Input pressure was removed after 18 months and a calibration check performed. A request was made to extend the test out to 30 months so another calibration check was performed prior to pressurizing the transmitters to 50 psi again. No adjustment was made to the calibrations of the test units during the test interruption. Calibration data was recorded again after the test was over.

Transmitter output voltages measured during the first 18 months of the test are shown in Table 1 along with the output shifts. Output shifts are referenced to the output voltage measured at the beginning of the test. All of the output shifts are within the new stability specification of ±0.2% URL (±.016 V). Ambient temperatures ranged from 70 to 82°F

Results from the extension of the test to 30 months are shown in Table 2. Output shifts again are referenced to the output voltage measured at the beginning of the test. However, the shifts are adjusted for the change in output observed between the last measurement before the extension and the first measurement of the extension due to shut-down and start-up of pressure source.

For example, the output measured after 18 months for S/N 402720 was 5.990 V. After the pressure source was reapplied to the transmitter, the output was 5.996 V. The output shift referenced to the beginning of the test is +0.006 V (5.996 - 5.990 V). To determine the output shift due to drift, this value is adjusted by subtracting the 0.006 V output shift due to the change in pressure, resulting in an output drift of 0.000 V (0.006 - 0.006V).

All of the output shifts in Table 2 are within the new stability specification of ±0.2% URL (±.016 V). A graph of the output drift is shown in Figure 1. Ambient temperature ranged from 67-76°F.

The calibration checks made at the beginning of the test are shown in Table 3 and meet the accuracy specification ±0.25% span (±0.020 V). Calibration checks made after 18 months are shown in Table 4, prior to the extension to 30 months in Table 5, and after 30 months in Table 6. All meet the combined effects of accuracy (±0.25% span) and drift (±0.2% URL).

Original data is stored in Engineering Test File ETF.24.0.

TABLE 1 - TRANSMITTER OUTPUT DRIFT 0-18 MONTHS

	OUTPUT (V) OUTPUT SHIFT (V)			
TIME	S/N 402720	402721	402722	402723
DAY 1	5.990 .000	6.000 .000	5.992 .000	5.990 .000
DAY 2	5.990 .000	6.000 .000	5.993 +.001	5.990 .000
DAY 3	5.990 .000	6.000 .000	5.993 +.001	5.991 +.001
DAY 4	5.990 .000	6.000 .000	5.993 +.001	5.991 +.001
DAY 5	5.990 .000	6.000 .000	5.993 +.001	5.989 -.001
DAY 8	5.992 +.002	6.001 +.001	5.995 +.003	5.991 +.001
WEEK 2	5.993 +.003	6.001 +.001	5.997 +.005	5.992 +.002
WEEK 3	5.991 +.001	6.001 +.001	5.996 +.004	5.991 +.001
WEEK 4	5.994 +.004	6.002 +.002	5.997 +.005	5.989 -.001
WEEK 5	5.991 +.001	5.999 -.001	5.994 +.002	5.990 .000
WEEK 6	5.992 +.002	6.000 .000	5.994 +.002	5.989 -.001
WEEK 7	5.993 +.003	6.000 .000	5.995 +.003	5.991 +.001
WEEK 8	5.994 +.004	6.001 +.001	5.997 +.005	5.992 +.002
WEEK 9	5.993 +.003	5.999 -.001	5.996 +.004	5.990 .000
WEEK 10	5.994 +.004	5.999 -.001	5.996 +.004	5.990 .000
WEEK 11	5.992 +.002	6.000 .000	5.995 +.003	5.990 .000

TABLE 1 (CONT'D) - TRANSMITTER OUTPUT DRIFT 0-18 MONTHS

TIME	S/N 402720	OUTPUT (V) / OUTPUT SHIFT (V) 402721	402722	402723
WEEK 12	5.992 +.002	5.999 -.001	5.997 +.005	5.990 .000
WEEK 13	5.993 +.003	5.999 -.001	5.997 +.005	5.990 .000
WEEK 14	5.993 +.003	5.999 -.001	5.997 +.005	5.990 .000
WEEK 15	5.993 +.003	5.999 -.001	5.997 +.005	5.990 .000
WEEK 16	5.994 +.004	6.000 .000	5.998 +.006	5.991 +.001
WEEK 17	5.993 +.003	6.000 .000	5.998 +.006	5.991 +.001
WEEK 18	5.993 +.003	6.000 .000	5.997 +.005	5.990 .000
WEEK 19	5.993 +.003	6.000 .000	5.996 +.004	5.990 .000
WEEK 20	5.993 +.003	6.000 .000	5.997 +.005	5.990 .000
WEEK 21	5.993 +.003	5.999 -.001	5.997 +.005	5.990 .000
WEEK 22	5.993 +.003	5.999 -.001	5.997 +.005	5.990 .000
WEEK 23	5.993 +.003	5.999 -.001	5.997 +.005	5.989 -.001
WEEK 24	5.993 +.003	5.999 -.001	5.997 +.005	5.989 -.001
WEEK 25	5.993 +.003	5.999 -.001	5.998 +.006	5.990 .000
MONTH 7	5.992 +.002	5.998 -.002	5.997 +.005	5.989 -.001
MONTH 8	5.992 +.002	5.998 -.002	5.996 +.004	5.986 -.004

TABLE 1 (CONT'D) - TRANSMITTER OUTPUT DRIFT 0-18 MONTHS

TIME	OUTPUT (V) / OUTPUT SHIFT (V) S/N 402720	402721	402722	402723
MONTH 9	NR	NR	NR	NR
MONTH 10	5.992 +.002	5.996 -.004	5.997 +.005	5.987 -.003
MONTH 11	5.993 +.003	5.997 -.003	5.998 +.006	5.988 -.002
MONTH 12	5.993 +.003	5.994 -.006	5.996 +.004	5.986 -.004
MONTH 13	5.996 +.006	5.995 -.005	5.998 +.006	5.988 -.002
MONTH 14	5.994 +.004	5.996 -.004	5.996 +.004	5.986 -.004
MONTH 15	5.992 +.002	5.996 -.004	5.996 +.004	5.986 -.004
MONTH 16	6.003 +.013	5.995 -.005	6.000 +.008	5.988 -.002
MONTH 17	NR	NR	NR	NR
MONTH 18	5.990 .000	5.994 -.006	5.999 +.007	5.986 -.004

JAN-16-2001 10:24 ROSEMOUNT NUCLEAR 6128286280 P.10

TABLE 2 - TRANSMITTER OUTPUT DRIFT EXTENSION TO 30 MONTHS

	OUTPUT (V) OUTPUT SHIFT (V)			
TIME	S/N 402720	402721	402722	402723
DAY 1	5.996 .000	5.990 -.006	5.995 +.007	5.979 -.004
DAY 2	5.995 -.001	5.989 -.007	5.995 +.007	5.977 -.006
DAY 3	NR	NR	NR	NR
DAY 4	5.993 -.003	5.987 -.009	5.992 +.004	5.977 -.006
MONTH 19	5.994 -.002	5.998 +.002	5.993 +.005	5.978 -.005
MONTH 20	5.995 -.001	5.991 -.005	5.995 +.007	5.979 -.004
MONTH 21	5.994 -.002	5.997 +.001	5.998 +.010	5.982 -.001
MONTH 22	NR	NR	NR	NR
MONTH 23	5.993 -.003	5.998 +.002	6.000 +.012	5.988 +.005
MONTH 24	5.992 -.004	5.998 +.002	6.000 +.012	5.988 +.005
MONTH 25	5.988 -.008	5.995 -.001	5.996 +.008	5.985 +.002
MONTH 26	5.992 -.004	5.997 +.001	6.000 +.012	5.987 +.004
MONTH 27	NR	NR	NR	NR
MONTH 28	5.993 -.003	5.997 +.001	6.002 +.014	5.988 +.005
MONTH 29	5.984 -.012	5.992 -.004	5.994 +.006	5.981 -.002
MONTH 30	5.991 -.005	5.996 .000	5.999 +.011	5.988 +.005

TABLE 3 - INITIAL ACCURACY CHECK

INPUT, % SPAN	0%	20%	40%	60%	80%	100%
IDEAL OUTPUT (V)	2.000	3.600	5.200	6.800	8.400	10.000
S/N 402720						
INCREASING INPUT						
ACTUAL OUTPUT (V)	1.995	3.592	5.188	6.785	8.383	9.986
VOLTAGE SHIFT	-.005	-.008	-.012	-.015	-.017	-.014
DECREASING INPUT						
ACTUAL OUTPUT (V)	1.996	3.595	5.192	6.789	8.386	9.986
VOLTAGE SHIFT	-.004	-.005	-.008	-.011	-.014	-.014
INCREASING INPUT						
ACTUAL OUTPUT (V)	1.995	3.593	5.190	6.787	8.385	9.988
VOLTAGE SHIFT	-.005	-.007	-.010	-.013	-.015	-.012
S/N 402721						
INCREASING INPUT						
ACTUAL OUTPUT (V)	1.995	3.592	5.196	6.797	8.393	9.990
VOLTAGE SHIFT	-.005	-.008	-.004	-.003	-.007	-.010
DECREASING INPUT						
ACTUAL OUTPUT (V)	1.997	3.596	5.199	6.800	8.395	9.990
VOLTAGE SHIFT	-.003	-.004	-.001	.000	-.005	-.010
INCREASING INPUT						
ACTUAL OUTPUT (V)	1.997	3.594	5.197	6.799	8.395	9.991
VOLTAGE SHIFT	-.003	-.006	-.003	-.001	-.005	-.009
S/N 402722						
INCREASING INPUT						
ACTUAL OUTPUT (V)	1.997	3.593	5.191	6.791	8.390	9.993
VOLTAGE SHIFT	-.003	-.007	-.009	-.009	-.010	-.007
DECREASING INPUT						
ACTUAL OUTPUT (V)	1.998	3.596	5.194	6.794	8.391	9.993
VOLTAGE SHIFT	-.002	-.004	-.006	-.006	-.009	-.007
INCREASING INPUT						
ACTUAL OUTPUT (V)	1.998	3.595	5.193	6.793	8.392	9.998
VOLTAGE SHIFT	-.002	-.005	-.007	-.007	-.008	-.002

TABLE 3 (CONT'D) - INITIAL ACCURACY CHECK

INPUT, % SPAN	0%	20%	40%	60%	80%	100%
IDEAL OUTPUT (V)	2.000	3.600	5.200	6.800	8.400	10.000
S/N 402723						
INCREASING INPUT						
ACTUAL OUTPUT (V)	1.996	3.592	5.189	6.786	8.386	9.992
VOLTAGE SHIFT	-.004	-.008	-.011	-.014	-.014	-.008
DECREASING INPUT						
ACTUAL OUTPUT (V)	1.998	3.595	5.191	6.789	8.388	9.992
VOLTAGE SHIFT	-.002	-.005	-.009	-.011	-.012	-.008
INCREASING INPUT						
ACTUAL OUTPUT (V)	1.997	3.594	5.192	6.788	8.388	9.994
VOLTAGE SHIFT	-.003	-.006	-.008	-.012	-.012	-.006

JAN-16-2001 10:24 ROSEMOUNT NUCLEAR

TABLE 4 - ACCURACY CHECK AFTER 18 MONTHS

INPUT, % SPAN	0%	20%	40%	60%	80%	100%
IDEAL OUTPUT (V)	2.000	3.600	5.200	6.800	8.400	10.000
S/N 402720						
INCREASING INPUT						
ACTUAL OUTPUT (V)	2.000	3.594	5.190	6.787	8.382	9.984
VOLTAGE SHIFT	.000	-.006	-.010	-.013	-.018	-.016
DECREASING INPUT						
ACTUAL OUTPUT (V)	2.001	3.599	5.194	6.789	8.385	9.984
VOLTAGE SHIFT	+.001	-.001	-.006	-.011	-.015	-.016
INCREASING INPUT						
ACTUAL OUTPUT (V)	2.001	3.597	5.192	6.787	8.383	9.984
VOLTAGE SHIFT	+.001	-.003	-.008	-.013	-.017	-.016
S/N 402721						
INCREASING INPUT						
ACTUAL OUTPUT (V)	1.997	3.592	5.194	6.794	8.387	9.983
VOLTAGE SHIFT	-.003	-.008	-.006	-.006	-.013	-.017
DECREASING INPUT						
ACTUAL OUTPUT (V)	1.997	3.594	5.197	6.797	8.390	9.983
VOLTAGE SHIFT	-.003	-.006	-.003	-.003	-.010	-.017
INCREASING INPUT						
ACTUAL OUTPUT (V)	1.997	3.593	5.195	6.794	8.389	9.984
VOLTAGE SHIFT	-.003	-.007	-.005	-.006	-.011	-.016
S/N 402722						
INCREASING INPUT						
ACTUAL OUTPUT (V)	2.007	3.602	5.197	6.795	8.390	9.992
VOLTAGE SHIFT	+.007	+.002	-.003	-.005	-.010	-.008
DECREASING INPUT						
ACTUAL OUTPUT (V)	2.007	3.603	5.199	6.797	8.393	9.992
VOLTAGE SHIFT	+.007	+.003	-.001	-.003	-.007	-.008
INCREASING INPUT						
ACTUAL OUTPUT (V)	2.007	3.602	5.198	6.795	8.391	9.992
VOLTAGE SHIFT	+.007	+.002	-.002	-.005	-.009	-.008

JAN-16-2001 10:25 ROSEMOUNT NUCLEAR

TABLE 4 (CONT'D) - ACCURACY CHECK AFTER 18 MONTHS

INPUT, % SPAN	0%	20%	40%	60%	80%	100%
IDEAL OUTPUT (V)	2.000	3.600	5.200	6.800	8.400	10.000
S/N 402723						
INCREASING INPUT						
ACTUAL OUTPUT (V)	1.995	3.593	5.187	6.783	8.382	9.987
VOLTAGE SHIFT	-.005	-.007	-.013	-.017	-.018	-.013
DECREASING INPUT						
ACTUAL OUTPUT (V)	1.995	3.593	5.187	6.786	8.384	9.987
VOLTAGE SHIFT	-.005	-.007	-.013	-.014	-.016	-.013
INCREASING INPUT						
ACTUAL OUTPUT (V)	1.995	3.592	5.187	6.784	8.383	9.987
VOLTAGE SHIFT	-.005	-.008	-.013	-.016	-.017	-.013

JAN-16-2001 10:25 ROSEMOUNT NUCLEAR

TABLE 5 - ACCURACY CHECK BEFORE TEST EXTENSION

INPUT, % SPAN	0%	20%	40%	60%	80%	100%
IDEAL OUTPUT (V)	2.000	3.600	5.200	6.800	8.400	10.000
S/N 402720						
INCREASING INPUT						
ACTUAL OUTPUT (V)	2.001	3.600	5.198	6.796	8.383	9.985
VOLTAGE SHIFT	+.001	.000	-.002	-.004	-.017	-.015
DECREASING INPUT						
ACTUAL OUTPUT (V)	1.999	3.596	5.193	6.788	8.385	9.985
VOLTAGE SHIFT	-.001	-.004	-.007	-.012	-.015	-.015
INCREASING INPUT						
ACTUAL OUTPUT (V)	1.999	3.595	5.198	6.786	8.382	9.984
VOLTAGE SHIFT	-.001	-.005	-.002	-.014	-.018	-.016
S/N 402721						
INCREASING INPUT						
ACTUAL OUTPUT (V)	1.999	3.597	5.202	6.803	8.390	9.985
VOLTAGE SHIFT	-.001	-.003	+.002	+.003	-.010	-.015
DECREASING INPUT						
ACTUAL OUTPUT (V)	1.996	3.593	5.197	6.796	8.390	9.985
VOLTAGE SHIFT	-.004	-.007	-.003	-.004	-.010	-.015
INCREASING INPUT						
ACTUAL OUTPUT (V)	1.996	3.592	5.195	6.793	8.388	9.984
VOLTAGE SHIFT	-.004	-.008	-.005	-.007	-.012	-.016
S/N 402722						
INCREASING INPUT						
ACTUAL OUTPUT (V)	2.008	3.605	5.203	6.802	8.390	9.991
VOLTAGE SHIFT	+.008	+.005	+.003	+.002	-.010	-.009
DECREASING INPUT						
ACTUAL OUTPUT (V)	2.006	3.601	5.198	6.795	8.391	9.991
VOLTAGE SHIFT	+.006	+.001	-.002	-.005	-.009	-.009
INCREASING INPUT						
ACTUAL OUTPUT (V)	2.006	3.600	5.196	6.792	8.398	9.990
VOLTAGE SHIFT	+.006	.000	-.004	-.008	-.002	-.010

JAN-16-2001 10:25 ROSEMOUNT NUCLEAR

TABLE 5 (CONT'D) - ACCURACY CHECK BEFORE TEST EXTENSION

INPUT, % SPAN	0%	20%	40%	60%	80%	100%
IDEAL OUTPUT (V)	2.000	3.600	5.200	6.800	8.400	10.000
S/N 402723						
INCREASING INPUT						
ACTUAL OUTPUT (V)	1.994	3.591	5.188	6.785	8.373	9.976
VOLTAGE SHIFT	-.006	-.009	-.012	-.015	-.027	-.024
DECREASING INPUT						
ACTUAL OUTPUT (V)	1.991	3.588	5.182	6.777	8.374	9.976
VOLTAGE SHIFT	-.009	-.012	-.018	-.023	-.026	-.024
INCREASING INPUT						
ACTUAL OUTPUT (V)	1.991	3.586	5.180	6.775	8.372	9.975
VOLTAGE SHIFT	-.009	-.014	-.020	-.025	-.028	-.025

TABLE 6 - ACCURACY CHECK AFTER 30 MONTHS

INPUT, % SPAN	0%	20%	40%	60%	80%	100%
IDEAL OUTPUT (V)	2.000	3.600	5.200	6.800	8.400	10.000
S/N 402720						
INCREASING INPUT						
ACTUAL OUTPUT (V)	2.000	3.597	5.193	6.788	8.385	9.986
VOLTAGE SHIFT	.000	-.003	-.007	-.012	-.015	-.014
DECREASING INPUT						
ACTUAL OUTPUT (V)	1.999	3.598	5.195	6.791	8.387	9.986
VOLTAGE SHIFT	-.001	-.002	-.005	-.009	-.013	-.014
INCREASING INPUT						
ACTUAL OUTPUT (V)	1.999	3.597	5.193	6.788	8.386	9.987
VOLTAGE SHIFT	-.001	-.003	-.007	-.012	-.014	-.013
S/N 402721						
INCREASING INPUT						
ACTUAL OUTPUT (V)	1.995	3.592	5.195	6.798	8.391	9.986
VOLTAGE SHIFT	-.005	-.008	-.005	-.002	-.009	-.014
DECREASING INPUT						
ACTUAL OUTPUT (V)	1.995	3.594	5.198	6.797	8.393	9.986
VOLTAGE SHIFT	-.005	-.006	-.002	-.003	-.007	-.014
INCREASING INPUT						
ACTUAL OUTPUT (V)	1.995	3.592	5.196	6.795	8.392	9.987
VOLTAGE SHIFT	-.005	-.008	-.004	-.005	-.008	-.013
S/N 402722						
INCREASING INPUT						
ACTUAL OUTPUT (V)	2.007	3.603	5.200	6.798	8.397	9.998
VOLTAGE SHIFT	+.007	+.003	.000	-.002	-.003	-.002
DECREASING INPUT						
ACTUAL OUTPUT (V)	2.007	3.604	5.202	6.800	8.398	9.998
VOLTAGE SHIFT	+.007	+.004	+.002	.000	-.002	-.002
INCREASING INPUT						
ACTUAL OUTPUT (V)	2.007	3.603	5.200	6.798	8.397	9.999
VOLTAGE SHIFT	+.007	+.003	.000	-.002	-.003	-.001

JAN-16-2001 10:25 ROSEMOUNT NULLBNK

TABLE 6 (CONT'D) - ACCURACY CHECK AFTER 30 MONTHS

INPUT, % SPAN	0%	20%	40%	60%	80%	100%
IDEAL OUTPUT (V)	2.000	3.600	5.200	6.800	8.400	10.000
S/N 402723						
INCREASING INPUT						
ACTUAL OUTPUT (V)	1.994	3.591	5.188	6.786	8.386	9.992
VOLTAGE SHIFT	-.006	-.009	-.012	-.014	-.014	-.008
DECREASING INPUT						
ACTUAL OUTPUT (V)	1.998	3.592	5.190	6.788	8.388	9.992
VOLTAGE SHIFT	-.002	-.008	-.010	-.012	-.012	-.008
INCREASING INPUT						
ACTUAL OUTPUT (V)	1.998	3.591	5.188	6.786	8.386	9.992
VOLTAGE SHIFT	-.002	-.009	-.012	-.014	-.014	-.008

4.0 CONCLUSION

Based on the test results documented in this report and the similarity in design between the Model 1152, 1153, and 1154 transmitters, it has been demonstrated that the Rosemount Model 1152, 1153, and 1154 transmitters will meet a new stability specification of ±0.2% URL.

ATTACHMENT 5

Heise Digital Pressure Indicator Data

(3 pages attached)

11/03/99 10:21 ☎1 800 287 4000 THERMO CENSE 004/005

LIST PRICES APPLYING TO BULLETIN ST2H-1

HEISE®

DIGITAL PRESSURE INDICATORS

Effective June 15, 1999

ST2H/PP9-1A/99
Page 3 of 4

HQS-2: QUICK SELECT PRESSURE MODULES

Gauge and Absolute (All ranges include 316SS isolation, except where indicated by "*")

psi	Inches Water	Inches Mercury	mm Mercury	kPa	Bar KgCm²	mBar cmH₂O	mmH₂O	Accuracy† ±0.025%	±0.05%	±0.1%
								Gauge Pressure		
5*	100*	10*	250*	25*	1	250*	3000*			
10	150*	20	500	40*	1.8	300*	5000*	650.00	600.00	550.00
15	250	30	750	60	2.5	400*	10,000	[2]	[1]	[1]
30	300	60	1000	100	4	500*				
50	500	100	1500	160	6	600				
60	1000	200	3000	250	10	1000				
100		300	5000	400	16	1600				
150		500		600		2000				
200				1000		2500				
250						4000			Absolute Pressure	
300						5000		725.00	675.00	625.00
				mPa		6000		[2]	[1]	[1]
				1		10,000				
				1.6						
500		1000		2.5	25				Gauge Pressure	
600				4.0	40			750.00	700.00	650.00
1000				6.0	60			[2]	[1]	[1]
1500				10	100					
2000				16	160					
2500				25	250					
3000				40	400				Absolute Pressure	
5000				60	600			825.00	775.00	725.00
6000								[2]	[1]	[1]
7500										
10,000								–	–	790.00
psi	**Inches Water**	**Inches Mercury**	**mm Mercury**	**kPa**	**Bar kg/cm²**	**mBar cmH₂O**	**mmH₂O**	**Accuracy† ±0.025%**	**±0.05%**	**±0.1%**
Vacuum										
5*		10*	250*	25*	0.25*	250*	3000*			
10		20	500	40*	0.4*	400*	5000*	725.00	675.00	625.00
15		30	750	60	0.6	600		[2]	[1]	[1]
				100	1.0	1000				
Compound										
±5	±100*	±10	±300	±25*	±0.25*	±250*	±3000*			
±10	±250	±20	±500	±40*	±0.40*	±400*	±5000			
±15	±400	±30	±750	±60	±0.60	±600	±10,000	725.00	675.00	625.00
–15/30		–30/60	–750/1500	±100	±1.0	±1000		[2]	[1]	[1]
–15/60		–30/100	–750/3000	–100/200	–1/2	–1000/2000				
				–100/400	–1/4	–1000/4000				

*Non-isolated; for clean dry gas only.

†Maximum includes nonlinearity, nonrepeatability and hysteresis.

HQS-2 OPTIONS

Enhanced Calibration (no additional temperature error throughout operating range of 20-120°F) 100.00
Non-Standard Ranges 115.00
G ¼ British Standard Fitting 30.00
Flush Port (isolated sensors only) 95.00
Welded VCR Connection (with standard finish on gland) 85.00
Oxygen Cleaning (isolated sensors only) 115.00

© Instrument Division, Dresser Industries, Inc. 1996

DRESSER INSTRUMENT
A Halliburton Company

10" 150 1000
30 psi 200 1500
50 psi 500 10"
300"

HEISE MODEL ST-2H INDICATOR SPECIFICATIONS

Standard Display: Alphanumeric LCD, 0.37-inch height, 2 lines, 16 characters/line.
Optional Display: Backlit LCD alphanumeric with 2 lines and 16 characters/line.
Display Resolution: ±0.002% of span with damping 1 part in 50,000 (max).
Display Update Rate: 100 ms.
Engineering Units: psi, in.H_2O, in.Hg, ftSW, bar, mbar, kPa, MPa, mmHg, cmH_2O, mmH_2O and kgcm² and any single user-programmable engineering unit.
Damping: Programmable averaging from zero through 16 consecutive readings.

TEMPERATURE SPECIFICATIONS

Standard Operating Range: 32° to 120°F (0 to 49°C).

Compensated Range: 20° to 120°F (−7° to +49°C).
Reference Temperature: 70 ±3°F.
Standard Temperature Effect: ±0.004% of span per degree Fahrenheit over the compensated range.
Optional: Quick-Select modules are available calibrated to maintain rated accuracy over the 20° to 120°F (−7° to +49°C) compensated temperature range.
Storage Limits: −4°F to +158°F (−20° to +70°C).

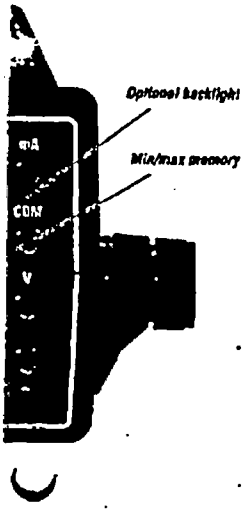

ELECTRICAL SPECIFICATIONS

Electrical Sourcing Specification: 24 Vdc at 25mA.
Electrical Measurement Specification:

Input (volts)	Accuracy
0/10 Vdc	±0.025% F.S.
0/30 Vdc	±0.10% F.S.
Input (mA)	**Accuracy**
0/20 mA	±0.03% F.S.
0/50 mA	±0.05% F.S.

Auto-ranging 10/30 Vdc & 20/50mA
Temperature Effects Electrical Measurement: ±0.001% of span per °F over the compensated range.

INTERFACE AND DATA LOGGING

RS232 Serial Interface: with 9-pin D type at 300, 1200, 2400, 9600 baud.
Field Calibration: Calibration module and proper pressure and electrical standards are required.
Optional Data Logging capacity:
Standard measurements: 714 records.
Date/time stamped measurements: 384 records.
Optional Certification Generation Firmware: Stores 10 complete sets of calibration data including 10 "as found" and 10 "as left" data sets.

MECHANICAL SPECIFICATIONS

Weight: ST-2H Base unit: 3.0 lb (1.4 kg).
Housing: Molded, high-impact ABS case.
Electrical Connections: Standard banana jacks.
Optional Battery Power Supply: 5 "AA" nicads with built-in charger.
External Power Supply: AC adaptor 9 Vdc, 500mA.
Portable Operation: 20 hours with optional backlight off, 2 hours with backlight on.
Warm-up: 5 minutes for rated accuracy (maximum), 30 minutes for complete stability.

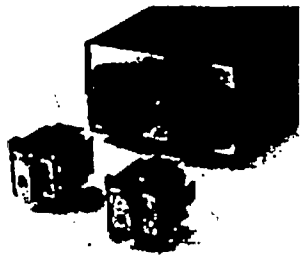

HQS Modular Sensor System

ACCESSORIES

AC Adaptors: provide 9 Vdc output.

Part Number	Adapts from
831X016-01	110 Vac, 60Hz
831X016-02	100 Vac, 50 Hz
831X016-03	230 Vac, 50 Hz

Calibration Quick-Select Module: For calibration of base unit electronics.
Part Number: CQS.
System Protection Module: Protects base unit when only one measurement module is required.
Part Number: HQS-XS.
Cable Assembly: Connects base unit to 9-pin female serial port on computer.
Part Number: 838X011-01.
Adapter 9-pin to 25-pin: Serial port connector on computer.
Part Number: 838X012-01.
Hoses: provide ½-20 UNF internal fittings. For use with pumps and general process connections.
3 ft hose, *Part Number:* 840X007-01.
5 ft hose, *Part Number:* 840X007-02.
⅛ NPT external fitting adaptor to convert hose connector from ½-20 to NPT.
Part Number: 840X006-01.

FOR MORE INFORMATION

Request the following documents.
Temperature Module: HQS-1
Pressure Modules: PTE-1
Pumps: HACC-P
Voltage Adapter: HACC-SM
How to Order: See Price Sheet ST-2H-1 for ordering information.
Contact us at: 203-426-3115.

ST-2H Dimension Drawings

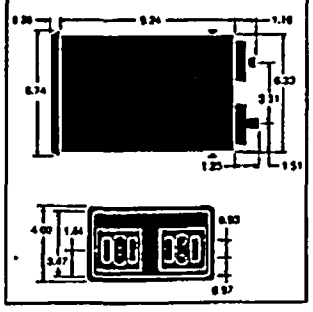

* Fieldlink is a registered trade name of AutoCotch Corporation.

MIN:	PM1914
NOUN NAME:	Digital Pressure Module
MANUFACTURER:	Heise
MODEL NO.:	HQS-2
SERIAL NO.:	18367
RANGE:	0 to 1500 PSIG
ACCURACY:	± 0.9 PSIG
ENVIRONMENTAL LIMITATIONS:	Operating ambient temperature is limited to 20°F to 120°F without corrections. Contact the Cal Lab for corrections if ambient temperature is outside the above specified range.
NOTE:	This pressure module must be used in a Heise Digital Indicator assembly, model number ST-2H, or equivalent. The assembly supplies operating power and a digital readout for the pressure module. The Digital Indicator Assembly has voltage and current functions which are not certified for use for quantitative data.

Approved by: [signature] 10/15/00