ORIGINAL

UNITED STATES
NUCLEAR REGULATORY COMMISSION

IN THE MATTER OF: DOCKET NO:

ADVISORY COMMITTEE ON REACTOR SAFEGUARDS

310TH GENERAL MEETING

LOCATION: WASHINGTON, D. C. PAGES: 1 - 364

DATE: FRIDAY, FEBRUARY 14, 1986

ACRS OFFICE COPY
Do Not Remove from ACRS Office

ACE-FEDERAL REPORTERS, INC.

Official Reporters
444 North Capitol Street
Washington, D.C. 20001
(202) 347-3700

NATIONWIDE COVERAGE

8602240120 860214
PDR ACRS
T-1489 PDR

PUBLIC NOTICE BY THE

UNITED STATES NUCLEAR REGULATORY COMMISSIONERS'

ADVISORY COMMITTEE ON REACTOR SAFEGUARDS

FRIDAY, FEBRUARY 14, 1986

The contents of this stenographic transcript of the proceedings of the United States Nuclear Regulatory Commission's Advisory Committee on Reactor Safeguards (ACRS), as reported herein, is an uncorrected record of the discussions recorded at the meeting held on the above date.

No member of the ACRS Staff and no participant at this meeting accepts any responsibility for errors or inaccuracies of statement or data contained in this transcript.

UNITED STATES OF AMERICA

NUCLEAR REGULATORY COMMISSION

* * *

ADVISORY COMMITTEE ON REACTOR SAFEGUARDS

310TH GENERAL MEETING

Nuclear Regulatory Commission
Room 1046
1717 H Street, N.W.
Washington, D. C.

Friday, February 14, 1986

The 310th General Meeting reconvened at 8:30 a.m., Mr. David A. Ward, chairman, presiding.

ACRS MEMBERS PRESENT:

MR. DAVID A. WARD
MR. JESSE C. EBERSOLE
DR. MAX W. CARBON
MR. HAROLD ETHERINGTON
DR. WILLIAM KERR
DR. HAROLD W. LEWIS
DR. CARSON MARK
MR. CARLYLE MICHELSON
DR. DADE W. MOELLER
DR. DAVID OKRENT
MR. GLENN A. REED
DR. FORREST J. REMICK
DR. PAUL G. SHEWMON
DR. CHESTER P. SIESS
MR. CHARLES J. WYLIE

1 DAVbw

1 P R O C E E D I N G S

2 MR. WARD: The meeting will now come to order.

3 This is the second day of the 310th meeting of

4 the Advisory Committee on Reactor Safeguards.

5 During today's meeting the Committee will first

6 hear a briefing by representatives of the Office of

7 Inspection and Enforcement.

8 Second, hear about and discuss proposed changes

9 in the NRC regulations regarding potential sabotage by

10 insiders.

11 Third, hear a report of the ACRS Subcommittee

12 regarding proposed resolution of USI A-46.

13 Mr. Wylie is not available to give that report.

14 Fourth, we will discuss the check operator method

15 for requalification of reactor operators.

16 Fifth, hear a report by a representative from DOE

17 on the high level radioactive waste program.

18 Sixth, hear about and discuss recent operating

19 experiences at nuclear facilities.

20 And seventh, discuss further ACRS activities.

21 The schedule for Saturday is posted on the

22 bulletin board outside this meetint.

23 This meeting will be conducted in accordance with

24 the provisions of the General Advisory Committee Act.

25 This meeting will be conducted in accordance with

DAVbw

1 the provisions of the General Advisory Committee Act and the
2 Government in the Sunshine Act.
3 Mr. R. F. Fraley is the designated federal
4 official for the initial portion of the meeting.
5 Portions of the meeting may be closed to protect
6 proprietary information related to the topic being
7 discussed.
8 A transcript of portions of the meeting is being
9 kept, and I request that each speaker use one of the
10 microphones, identify herself or himself and speak with
11 sufficient clarity and volume, so that she or he can be
12 readily heard.
13 We have received no written statements, no
14 requests to make oral statements from members of the public
15 regarding today's session.
16 We will begin with our first agenda item.
17 I believe Mr. Jim Konklin of I&E will present
18 it.
19 Mr. Konklin.
20 MR. PARTLOW: Good morning. I am Jim Partlow
21 from the Office of Inspection and Enforcement.
22 Periodically, I&E likes to get on your busy agenda to come
23 down and tell you some of the things that we're trying to do
24 with our basic reactor inspection program. This is the
25 opportunity to do that. We are going to discuss with you

1 this morning our first starts at what we call the safety
2 systems outage modification inspection program. It is being
3 done currently in headquarters with our I&E staff and with
4 consultants.
5 We are entering into this program, first, because
6 of events that plants tell us that there is reason to be
7 concerned about plants as they age, as they are modified to
8 go through significant changes during outages over the
9 years, and there is a need to watch what this does to the
10 original safety basis of the plant, as changes are
11 designed, as they are implemented in the plant, the quality
12 of that implementation and in the full testing of that
13 plant, as it finishes its modification.
14 The second thing we're trying to do with this is
15 really looking for ways to become more effective in carrying
16 out our inspection program in the future, to try to take our
17 program and turn it more into an in-depth look at what is
18 really happening to systems in plants more, as opposed to
19 what we tend to call the programmatic inspections that we
20 conduct on an individual basis by regional inspectors who go
21 out and look at such things as design change areas or
22 quality insurance, and so forth. We are tending more and
23 more to believe in the periodic focused team inspection that
24 goes in depth and looks at safety system.
25 So that is what this program is about. We are

2 DAVbw

1 happy to be here this morning to do this with you.

2 We have Mr. Brian Grimes, Division Director in

3 I&E, who will be talking to you.

4 The main speaker will be Mr. Jim Konklin, our

5 Section Chief that is handling this program for us.

6 Jim?

7 (Slide.)

8 MR. KONKLIN: The purpose of this briefing, as

9 Jim Partlow said -- he actually covered quite a few points.

10 I will try to connect those as I go along -- is to discuss

11 the status of the trial inspection program, which is

12 presently underway as part of the development of a new

13 program for inspection of modifications made during outages

14 at operating plant

15 I will discuss the background and makeup of the

16 trial program, and then we will describe the present status

17 of the program. Then we have three other gentlemen, who

18 will describe the actual team inspections that have been

19 done to date, the results of those inspections and the

20 findings from those inspections.

21 (Slide.)

22 The aim of the inspection program is to determine

23 whether plant safety has been degraded or has been partially

24 compromised by modifications made during plant outages.

25 This is done through review of the licensee's program and

DAVbw

1 through inspection of selected work packages to verify that
2 adequate systems and procedures are in place for control of
3 design and procurement and for the work activities involved
4 in the installation of testing modifications, to verify
5 that the activities are performed in accordance with
6 procedures and methods and in accordance with the design
7 bases for the plant, the approved design bases.
8 The completed modifications should have been
9 properly designed, installed, inspected and tested.
10 MR. EBERSOLE: At that bullet there, when you go
11 into a plant the very first time, you go to start it up or
12 you go to approve its operation, is the closure completed on
13 bullet too that the plant has been adequately designed,
14 installed, inspected and a closure made back to the design
15 process to say yes, that is the way we want it?
16 MR. KONKLIN: You are talking about original
17 construction and preoperational and startup testing?
18 MR. EBERSOLE: I am thinking of such places as
19 Browns Ferry, where no such closure was made.
20 MR. KONKLIN: I guess from the standpoint of this
21 program, we do go in with the assumption that the original
22 design basis did close, that they were approved by the NRC.
23 MR. EBERSOLE: But now we know that they didn't.
24 MR. GRIMES: May I contribute to that? Brian
25 Grimes, I&E. I think it is only since the Diablo Canyon

DAVbw

1 mirror image problem that we've really put substantial
2 resources on trying to determine whether the design was
3 implemented as planned at the FSAR level information. NRR,
4 in the past, had looked at the design of certain safety
5 systems in some detail, but as far as the whole design
6 process, we'd never been out in the field looking at the
7 actual things until after the Diablo Canyon incident. After
8 that, we tried to write EBP or independent design
9 inspections or some other way before we grant a license to
10 give confidence that the design process has appropriately
11 been carried out.
12 In the older plants, we're finding there was a
13 control, a fairly well-controlled process in most instances
14 at the time of design or at the time of initial operation,
15 and most of the problems we've seen, I believe, are coming
16 out of the modifications. We haven't looked in detail at
17 Browns Ferry yet from that standpoint.
18 MR. MICHELSON: Let me ask, are you looking at
19 the modifications to the design process or just a design
20 product?
21 MR. GRIMES: We are looking at the product in the
22 design aspect of this inspection.
23 MR. MICHELSON: You are not going back and
24 looking at the process by which it was producted?
25 MR. GRIMES: We are looking at the process as a

DAVbw

1 contributor to problems we may have in the design product.

2 MR. MICHELSON: That kind of confuses the

3 answer.

4 Are you looking at the design process, or are you

5 looking at the product of the design and then looking to see

6 how it is implemented?

7 MR. WARD: I suspect this might come out in

8 Mr. Konklin's talk.

9 MR. GRIMES: We will speak to that.

10 MR. KONKLIN: Mr. Grimes' people did the design

11 part of the inspections, but part of it was review of design

12 and control systems.

13 MR. WARD: Are you going to address that later,

14 Brian?

15 MR. GRIMES: Yes.

16 MR. KONKLIN: He wil describe that later in

17 detail.

18 MR. WARD: Well, then go ahead.

19 MR. KONKLIN: The bottom line for this slide was

20 that we would hope to have some verification of the

21 equipment of the systems affected by the modifications that

22 we looked at. We don't have the ability to say that the

23 entire plant is safe, based on these expressions. The

24 equivalent systems affected by the modifications are ready

25 for safe startup and operation following the outage. Like

DAVbw

all NRC inspection programs, this is a sampling program?.

(Slide.)

The need for this program was identified sometime ago by Jim Taylor and others at that level and above in I&E, who looked at the large number of safety problems that were being reported by operating plants, problems which could be clearly tied back to work that was done on modifications during outages. These included design problems, installation problems, procurement problems and testing problems.

Another factor is that the routine inspection program has clearly not been identifying the root causes of these problems. We have no guarantee that this inspection program will identify all the root causes of all the problems, but we are trying to come up with a program which will look at the way modification are handled. We will look at the design, the four factors -- the design, procurement, installation and testing on modifications on a sampling basis to see if we can find some root causes.

DR. KERR: You refer several times to safety problems.

What do you mean by a "safety problem"?

MR. KONKLIN: I am talking about many of the operating incidents that are reported -- the Davis-Besse loss-of-feedwater event, which involved inadequate

DAVbw

1 engineering and checkout of modifications. Inadequate
2 testing. I am not an expert on all these reactor
3 operating.
4 MR. REED: Let me point out one that we all know
5 about.
6 DR. KERR: Well, I want to know whether they are
7 talking about a violation of tech specs, a violation of
8 regulations, or if there is -- that is what is meant by
9 safety problems. Are they identifying it in some different
10 fashion?
11 MR. KONKLIN: Right. During the period of the
12 past year we have been listing problems only from morning
13 reports, preliminary notifications, published event notices
14 like this.
15 DR. KERR: In effect, you are talking about LERs
16 or violations of tech specs?
17 MR. PARTLOW: Excuse me. This is Jim Partlow.
18 I think we are talking about any "problem," which
19 might raise questions about the ability of a safety-related
20 system to function when challenged.
21 DR. KERR: Excuse me. How do you identify those
22 systems?
23 MR. PARTLOW: The systems or those problems?
24 DR. KERR: You said any problem. I say how do
25 you identify them?

DAVbw

1 MR. PARTLOW: We are going to go through the
2 process here.
3 MR. KONKLIN: The process we were going to go
4 through is the inspections we do.
5 MR. PARTLOW: That is how we identify the
6 problems.
7 MR. REED: I am certainly very sympathetic to a
8 better review of modifications, not only the implementation
9 of modifications, but the reasons for, and whether they
10 should have been -- I have said for many years that the
11 basic modifications that have been proposed on the built
12 plants are probably the most serious problem in the overall
13 safety of the plants, and certainly there should be some way
14 in which modifications ought to be justified.
15 We have got something on that backfit area now,
16 and there should be a very careful approach to modification,
17 because you are dealing with a live animal. But one of my
18 problems is going to be, is this another paper chase, or are
19 competent people going to be involved in this review of the
20 modification and its implementation and requalification.
21 MR. KONKLIN: That is a good question, because
22 there is very much a lack, particularly in the regions of
23 deign backgrouns. Brian, when he gets to the design
24 inspection, for example, will describe the types of
25 inspectors that were used on that. This program leans

heavily on consultants. The trial program has -- for example, the design inspection had an NRC team leader who had been one of the IDI team leaders.

You had four basic consultants on the mechanical systems, mechanical components, electrical and I&C areas. People who had a great deal of experience during outages, or at least experience under the design process, I should say.

MR. REED: Well, I really worry about paper chases, all they do is add to the confusion.

MR. KONKLIN: I realize that.

MR. REED: And make them less safe. If there is a cadre of people who are confident to perform this activity, then all right.

DR. MOELLER: Does the review include any check on occupational dose estimates?

MR. KONKLIN: So far we have pretty much stayed away from all of those considerations. We are looking at specific modification packages from the standpoint of just these four areas, the design, the procurement, the actual installation, work activities and the testing and modifications. We have tried to keep out some of the other areas, a lot of which the regions are doing now as part of their routine inspection program.

The regions, for example, of these plants, have inspectors out doing ISI, welding, NDE, health physics,

DAVbw

1 security and other inspections of that type on an individual
2 inspector type basis, going out and looking in those areas.
3 We feel this is an attempt to get a team approach to look at
4 the overall four areas on modifications which hasn't been
5 really done to date.
6 MR. WARD: Jim, let me interrupt just a minute.
7 There are to be four presentations. I don't know if you had
8 planned to equally divide the time among those four or not.
9 MR. KONKLIN: Okay. I am trying to go.
10 MR. WARD: If you will tell me, is yours the
11 longest -- intended to be the longest one?
12 MR. KONKLIN: Slightly the longest, but not a
13 great deal longer.
14 MR. WARD: I think we'd better ask the members to
15 cooperate here. Let's hear what you have to say.
16 (Slide.)
17 The development of an inspection program -- I'll
18 run through this very quickly. We took the obvious steps to
19 review the existing NRC inspection programs. We found there
20 are many individual inspection procedures -- construction,
21 preops, operations, I&E and CAT inspection areas that could
22 be use. In some areas, there is no comprehensive or
23 integrated program.
24 We then took visits, setting up a team, using a
25 consultant with a lot of outage experience, residents at

DAVbw

1 four operating sites and various stages of outages, either
2 finishing major outages, going into them or in the middle of
3 them to study their approaches to outage modifications.
4 We then did the next obvious step, which is the
5 review of upcoming outages, and from that using factors,
6 giving two different types of outages.
7 Oe selected Fort Calhoun and Dresden 3 for the
8 trial program. Right now we are halfway through the trial
9 program at Dresden. Let me say first that the Fort Calhoun
10 outage was an 11-week outage, from September to December
11 1985 time period. The Dresden outage was an eight-month
12 outage during November '85, scheduled to be completed in
13 June 1986.
14 And for each of the outages, we are doing
15 inspections in those four areas that we talked about.
16 The Fort Calhoun trial outage program was
17 completed in late December of '85 and the design and
18 procurement parts of the Dresden 3 trial outage have been
19 completed in January, except for some individual vendor
20 business which still have to be done. The installation and
21 testing parts of the Dresden trial program are scheduled for
22 the April to June 1986 time period, based on whether the
23 utility meets their expected June completion date.
24
25

DAVbur

(Slide.)

I will try to go fast from this point on.

This slide is the obvious four inspection areas. It describes those areas or lists those areas, and although -- I have a separate slide on each one -- but prior to the outage we do a pre-outage review at which we gain information. We obtain as much detail as we can on the modification packages for the safety-related modifications that are being done during the outage.

MR. MICHELSON: Does your design inspection mean that you go back to the design organization or just whatever happens to be going on onsite?

MR. KONKLIN: No. It means in fact that it meets onsite.

MR. REED: Mr. Chairman, may I ask for a clarification on the path here?

I have the word here, "outage," modification in the inspection program, and I believe I have been seeing words in the last few months on refueling outage inspection programs.

Are these one and the same, or is this a subpart of the refueling outage inspection plan or whatever?

MR. KONKLIN: I am unaware of anything entitled refueling outage inspection program. I have never heard of it.

DAVbur

MR. PARTLOW: We have not used those words, as I recall.

MR. REED: Good.

MR. KONKLIN: The outage design inspection -- this is, like all NRC inspection programs, based on a sampling process. We select a number of interesting work packages.

Brian Grimes will describe this design in detail with what they did and the findings.

I can just say that the design has been a team approach, using the NRC team leader and the consultants, in the four basic technical areas.

The specific aims of the design discussion are to verify that the regulatory requirements and design bases specified in the FSAR correspondence to the NRC and documented in NRC safety evaluations are being implemented in the specifications, drawings, calculations, and procedures, verifying that the correct design information has been provided to the responsible design organizations involved with the modifications and verifying the design controls as applied to the original design have also been applied to the design changes, including field changes.

Brian Grimes will give a lot more detail about the design inspections at the two plants, including a discussion of the findings at these plants later in the

DAVbur

1 presentation.

2 (Slide.)

3 We also have an outage vendor inspection. The

4 purpose of this inspection is to determine whether the

5 services and products applied to support the outage are in

6 accordance with the commitment to requirements.

7 The inspection includes the review of services

8 and products provided by vendors, the review of known

9 hardware or service deficiencies for certain vendors

10 involved in the outage, review of past vendor audit findings

11 and examination of those vendor activities most likely to

12 affect the design integrity.

13 In addition, the utility's procurement practices

14 and procedures are examined. Now, this involves both

15 looking at things at the site, at the utility's offices, and

16 vendor trips to subcontractors.

17 John Craig of the Vendor Branch will discuss both

18 of the vendor inspections, including the findings, in a few

19 minutes.

20 (Slide.)

21 The outage installation inspection has an

22 objective of verifying through inspection of selected work

23 activities, first, design changes and other technical

24 requirements that have been properly incorporated into the

25 work packages, with adequate material controls, including

1 DAVbur

1 traceability.

2 Equipment qualification, shipping/receipt

3 inspection, storage and handling are implemented, proper

4 work controls, such as qualification of craftsmen and

5 inspectors, use of appropriate work and inspection

6 procedures, control of special processes, and control of

7 temporarily removed equipment.

8 And basically, the work activities are performed

9 in accordance with the procedural requirements. This is

10 very similar to the inspections that are done on the sites

11 under construction.

12 DR. OKRENT: Excuse me. I came in late.

13 Is there something special that makes you feel

14 that this is something that you need to do that you cannot

15 rely on the operator to do properly without your

16 supervision?

17 MR. KONKLIN: By operator, do you mean the

18 utility or the actual reactor plant operators?

19 DR. OKRENT: I mean the utility.

20 MR. KONKLIN: It is the same approach as is used

21 on the construction inspection program and the pre-op

22 program and the startup program. The NRC is inspecting on a

23 sampling basis to verify that the utility is doing what they

24 are committed to do and that they are meeting the

25 requirements.

1 That is really all this is. We found that the
2 routine NRC inspection program, which basically involves
3 individual inspections by specialists in specialist areas,
4 has not been looking at the overall approach and handling of
5 modifications during outages by the utilities. This is an
6 attempt to do that.
7 DR. OKRENT: And you have reason to think this is
8 not being done properly all the time without the benefit of
9 your program?
10 MR. GRIMES: This is Brian Grimes.
11 I think we mentioned earlier we have concerns
12 related from Davis-Besse, design and testing problems. We
13 mentioned the Haddam Neck seal failure on the vessel and
14 various changes which have been made which have resulted in
15 conditions which have resulted in safety systems not being
16 able to perform their intended function, and we believe
17 there is a number of challenges in the operating event
18 information which indicate that there may be problems in
19 this area.
20 This program is an attempt to take an engineering
21 look at design, testing, and so forth, and performance of
22 work.
23 We think there is cause for concern, and we tried
24 to bring to bear some fairly high level expertise to try to
25 see if this type of indefinite inspection would pay off.

DAVbur

DR. OKRENT: What I am getting at, is it disturbing to you that there should be cause for concern? If it is, is this the way to best deal with the situation?

MR. GRIMES: We have tried various things over the years, and as long as there continue to be events which show that the present system is not assuring with a high degree of confidence that things are going fine, I think we need to keep looking to see if there are better ways to oversee the process.

DR. OKRENT: Why are the licensees not, in your opinion, doing it properly?

MR. GRIMES: I think many licensees probably are doing it properly. I think there is a spectrum of performance in the utility industry. I think probably some of the problems we have seen are a result of that spectrum of utility resources and management expertise across the industry.

DR. OKRENT: What bothers me is I have to assume you are relating it to the spectrum that isn't doing it right. Everything the management touches or most of the management touches isn't going to turn out that there is a potential for a similar problem.

I am bothered by --

MR. WARD: He said resources. There is a spectrum of performance and there is a spectrum of

DAWbar

1 resources available for doing these sorts of things.

2 Do you see a correlation there?

3 MR. GRIMES: I think in our study for Congress of

4 the construction quality regs, NUREG-1055, there is a

5 definite correlation to the ability of various utilities and

6 the different approaches used, which resulted in some cases

7 in very bad construction.

8 DR. OKRENT: I am sure that must have had some

9 outliers. I know some problems that ran at the bad sites

10 where they had nominally highly qualified, well qualified

11 AEs and so forth.

12 MR. GRIMES: And we found a spectrum within AE

13 offices and technical overview by the utilities was a key

14 function.

15 DR. OKRENT: All right. I am wondering, is

16 anyone trying to see is there a way of starting back earlier

17 in this chain?

18 MR. GRIMES: Do you mean earlier in time or

19 earlier in the management?

20 DR. OKRENT: Earlier in the management chain?

21 MR. GRIMES: Jim Partlow may be able to say

22 something about the fact that INPO appears to be developing

23 a program in that area.

24 DR. OKRENT: I like what INPO is doing, but I

25 don't see them having quite that --

DAVbar

MR. GRIMES: I guess the problem I see in dealing with the problem conceptually is that everybody can look at it and come up with a somewhat different answer, and it is very difficult to treat things on a theoretical basis when dealing with a large number of variously qualified individuals in a specific situation.

It is hard to theoretically come up with what the one best way of doing this is. I think if we look at the specific results of the various processes and when we find acceptable results, then I would adduce that that is an acceptable process.

When we find unacceptable results, then that process needs to be changed.

DR. OKRENT: What fraction do you audit?

MR. GRIMES: It is hard to say.

Of the total process? Very, very small, less than 1 percent.

This is an effort to look in-depth at the particular.

MR. KONKLIN: Brian will be describing and the other two will be describing in some detail. I think you can get a lot more meat in that area when they talk about the actual inspections.

I only have two slides. I will go through them very fast.

DAVbur

MR. WARD: Just take two more minutes.

MR. KONKLIN: Two more minutes.

The last inspection we had tied in with this trial program is the preoperations inspection, which is done late in the outage. It is based on trying to factor in the results of the design, the vendor and installation inspections to determine what to look at.

In this part of the inspection at Fort Calhoun, we ended up finding out that since it was a fairly short outage we had to do the design and installation -- I mean, the installation and the pre-ops inspections together. It became one inspection because everything got shoved out to the end of a short outage. There was nothing to look at until the last week or so of the outage.

This inspection includes examinations of the controls and procedures for close-outs, turnover packages, sampling of the packages to verify the design. Repair, installation of testing requirements have been met. Verification on a sampling basis of the effect of plant procedures have been modified to account for system changes or additions and that operators or maintenance personnel have been trained in the revised procedures.

There have also been some as-built verifications by walkdowns of accessible systems, and we observe selected tests as we can, including structural, flushing and flow

DAVbur

1 tests, hydros, leak tests, functional tests, and then we
2 review test records to verify that the testing was done in
3 accordance with the procedures.
4 MR. MICHELSON: You are reviewing the test
5 itself, also, to see if it is a valid test?
6 MR. KONKLIN: That is right. The whole thing is
7 based on functionality.
8 MR. MICHELSON: I didn't notice that on your
9 listing, but I heard that.
10 MR. KONKLIN: Yes, the words are different than
11 that.
12 DR. OKRENT: If I can come back to the point I
13 was belaboring?
14 MR. WARD: Dave, you are talking primarily about
15 design?
16 DR. OKRENT: No, I am talking about whether or
17 not the licensee does a good job. It seems to me one or
18 another of the Commissioners was emphasizing
19 accountability. I put accountability and reputation
20 together all in the same bunch.
21 It seems to me that if you could establish that
22 the utility had accountability and reputability, and so
23 forth, tied to what was being done here -- you know, like
24 sometimes the accountability in Japan is so sufficient that
25 it ends up in hara-kiri. That is probably a personal

DAVbur

1 decision, but the pressure is pretty great.

2 Maybe you wouldn't have to do 1 percent

3 auditing.

4 MR. PARTLOW: This is Jim Partlow.

5 We are trying to take real steps with our

6 inspection program, where the theory would be that those

7 utilities, those sites which have that accountability, there

8 will be good inspection results. We will not find a lot of

9 problems.

10 So then we are taking definite steps to move our

11 inspection program to where it is using the resources that

12 we have and to reduce our routine inspection coverage at

13 those plants until such time as events show to us that they

14 are not remaining accountable and to use those resources

15 where the problems have been identified.

16 So IE has a responsibility to monitor performance

17 across the spectrum, outages, any of those places, under our

18 charter, monitor the performance of facilities.

19 The only answer I can give to you at this point

20 is that we are cognizant that there is differing performance

21 and differing performance should be recognized in our own

22 inspection program, and that is what we are trying to do.

23 DR. OKRENT: You can't require accountability?

24 MR. PARTLOW: No.

25 DR. OKRENT: Maybe we need a new rule.

DAVbur

(Slide.)

MR. KONKLIN: The remaining activities in the trial program -- and this is my last slide -- involve getting the Fort Calhoun final report and the Dresden design report out in February.

The Dresden procurement report, which is shown as being out in February, may be later than that because of these vendor inspections which still need to be done.

The Dresden installation and testing inspections, as I said before, are scheduled for the April to June time frame, depending on the schedule of the outage.

The next step after issuing the final Dresden report on this trial program would normally be to finish writing and issue a new inspection program. However, as of now we have been told that the resources which passed the Dresden inspection are devoted to the TVA effort until we hear different. So I can't give any kind of date on that.

MR. WARD: A quick question.

MR. REED: This is a trial program, and it seems to me that trial programs sometimes move into established routine rather quickly without testing of the trial program itself.

I said earlier that I am beginning to detect another paper chase, but do we really have the competence to abot serious incidents?

DAVbur

1 MR. WARD: I thought this was going to be a quick
2 question.
3 I am sorry.
4 MR. REED: I never say anything quickly because I
5 can't communicate that way.
6 DR. OKRENT: The question will be quick, but
7 there is a long comment.
8 (Laughter.)
9
10
11
12
13
14
15
16
17
18
19
20
21
22
23
24
25

DAVbur

MR. REED: San Onofre, the incident we just heard about, a very serious incident, was a modification of five check valves. There could be the best damn paper chase in the history of mankind and we can go through all your trial program paper chase, but if there is not competence on the part of the individual who has looked at the check valves to see that those were lousy check valves to begin with, then everything will fail.

Now, I would like to let your trial program simmer for five years and let Fort Calhoun start up and Dresden 3 start up and after five years see how many check valves fail. Then you would know how good your trial program and what your paper chase will accomplish and whether it really will add anything meaningful or just go to another plateau, another layer of paper activities in this already over-papered situation.

Now, quite frankly, the Japanese might have a system --

DR. KERR: What is the question?

MR. REED: I never really got there.

DR. OKRENT: Well...

DR. KERR: I just didn't want you to forget your question.

MR. WARD: Maybe I could ask one question: what sort of burden does this program put on the licensee?

DAVbur

How many man-months of activity are created for the licensee because of this program?

MR. KONKLIN: Fort Calhoun is the only one that we have a final result on. They didn't give us man-months of activity. They told us frequently early in the program that we were going to impact them significantly, and at the final exit interview we made the point that there's is slippage, they had about a two and a half slippage in an 11-week outage.

Their slippage could be attributed to problems they had in two particular areas, some control element assemblies that they had some major problems with and in another area.

MR. WARD: Did your inspection program create those problems?

MR. KONKLIN: No.

MR. WARD: That is my question.

MR. KONKLIN: We found some problems that they agreed to correct before they went back up. They essentially told us that they felt the major part of their slippage -- they would never admit that we had no impact. I don't think we can send teams of people in, especially to a small utility like Fort Calhoun, and not have some impact. There is no way we can figure out the exact number of days impact that we had on the outage, if at all.

DAVbur

MR. WARD: Of course, I wasn't exactly asking for exact, just approximately.

MR. KONKLIN: I don't think we had any impact on it. I said that, and they did not disagree with it.

MR. WARD: Let me ask Jim Partlow, if you have got 17 minutes left now, I will leave it to you how best want to use those.

MR. PARTLOW: Brian is going to quickly go through the design area. Then we will show you some examples of other findings and see if you have any questions on them.

MR. WARD: Okay. We won't have time for any questions. Obviously, we are interested, but I really need to keep on schedule today.

MR. GRIMES: Let me briefly address the qualifications issue.

The design team functioned by having an NRC team leader and some highly expert consultants in the four technical areas that Jim Konklin mentioned. Three of the four principal consultants had been architect engineer supervisors. They all had had architect engineer NSSS direct design experience. They had all participated in some of our earlier design inspections. So they were familiar with design inspection techniques.

The cumulative years of nuclear experience were

DAVbur

1 63 among the four individuals, and cumulative years of
2 architect engineering experience were 41 among the
3 individuals.
4 I think I quoted Cordell Reed at the Dresden exit
5 as saying he had received periodic reports from his staff
6 during the inspection and at no time had anyone questioned
7 the expertise of the design inspectors.
8 MR. REED: And this will be standard as you move
9 from trial to regular?
10 MR. GRIMES: We are not ready to move from trial
11 to regular yet. I think that poses one of the main problems
12 in doing that in the design area, the need for highly expert
13 people in the design area and the lack of those people in
14 the region.
15 So it is not clear how we would move the design
16 portion of this to the regions unless we provided consultant
17 assistance to them or somehow staffed them with more highly
18 qualified engineers in some disciplines than we now have in
19 the design area.
20 (Slide.)
21 There are two to three weeks of direct inspection
22 in these Fort Calhoun and Dresden design inspections. I
23 think I just briefly emphasized three main points.
24 One was our concern with the failure to assure
25 that the original design margins were not inadvertently

abrogated during the modification process. I will just say we found several examples of that, one of which we are still looking at whether it needs to be corrected or not. That was at Dresden.

You may be aware that boiling water reactors have a once-one out of two-twice trip system. The trip system was being changed from a mechanical to an electrical trip system.

It had previously had four separate channels. Through a long series of events in the design process two of the channels, one of which was required for a trip -- in other words, two A channels were grouped in the same cabinet without specific separation barriers; two B channels were grouped in the same cabinet without specific separation barriers.

Whether in the actual configuration we decide there is enough separation or not remains to be seen, but there is a 20-page GE 1969 design document which had not been consulted by the contractor who did the design work, evidently, because there was very specific guidance that in the original design criteria on the need for separation of the various channels.

Another example is the need for post-modification testing of the modifications that are installed.

We found one system at Fort Calhoun where their

DAVbur

1 accumulators were being put in to assure that certain valves
2 would operate during emergencies, certain valves that
3 normally relied on the instrument air would operate from a
4 safety source.
5 There was no provision planned at the time to
6 have the nitrogen accumulators drive these valves closed
7 during the post-modification testing. So we found that to
8 be a significant deficiency and something which tends to be
9 characteristic of situations where you don't have the design
10 engineers necessarily involved in specifying all of the
11 tests that must be done to assure system operability.
12 The third area of concern, which we did not find
13 any specific design faults in, was the handling of 5059
14 reviews.
15 In one case the utility had not considered 5059
16 reviews necessary for nonsafety-related systems. 5059
17 reviews are required for systems whose failure could impact
18 safety-related systems as well as the safety-related systems
19 of SALPs.
20 So we found several process-related failures
21 there.
22 To speak to an earlier point, the design-related
23 review itself is done by a specific look at the calculations
24 and methodologies used in the design process. Naturally, a
25 number of errors are found during this review. Those are

DAVbur

1 sorted for significance and whether they impact the actual
2 design or not.
3 Then we look across the disciplines also to see
4 if there is a generic problem with the design process. So
5 we start with the engineering, using highly expert
6 individuals, and look at the adequacy of specific
7 engineering design packages and then try to derive the root
8 cause process implications from that look.
9 I think that is all I will say due to the
10 shortness of time unless there are questions.
11 MR. WARD: Thanks.
12 A quick one, Carl.
13 MR. MICHELSON: I hope it is a quick one.
14 This process you have been describing is
15 obviously a resource intensive process of necessity. What
16 bothers me a little bit is if I have limited resources,
17 which you do have, is it better to hit a large number of
18 projects with the more obvious or is it better to hit one or
19 two projects and try to look in-depth?
20 The assumption is that the obvious is going to
21 take care of itself and you can begin to look at that at the
22 next level down, and I am not sure that our processes are
23 not other than obvious in many of these other cases.
24 Therefore, I would rather spread my resources out and hit
25 around a number of project than to expend them all on one

DAVbur

1 or two.

2 I would invite your comment.

3 MR. GRIMES: Our inspection process over the

4 years has been that top level look.

5 MR. MICHELSON: It has not been by team

6 necessarily. I would rather take one team of highly skilled

7 people and spread them around hit and miss throughout the

8 industry rather than sitting down and going through all this

9 agonizing detail on one or two projects.

10 But it is a matter of judgment.

11 MR. GRIMES: We are also looking at other types

12 of design inspections. PAT teams are now being supplemented

13 by some of these same individuals, at least in mechanical

14 and electrical, and we are looking at also possibly the I&C

15 area, to put them onsite maybe a week before the PAT team to

16 get into the actual design.

17 That was done at Turkey Point, for example.

18 There are some fairly significant findings there.

19 MR. MICHELSON: Don't let me be misunderstood. I

20 think the idea is good, but I would use that type of

21 approach, a hit team, and not going into such in-depth.

22 MR. GRIMES: We are still groping.

23 MR. WARD: Dr. Moeller had a question.

24 DR. MOELLER: I had a comment. It may be

25 unjustified, but it seems to me reflecting on what Glenn

1 Reed and others have said.

2 When an LER is reported, the urgings of this

3 committee have been to discover the root cause and try to

4 get back and correct it. It seems to me I don't hear that

5 here. Maybe this inspection is indeed trying to get to the

6 root cause so that it doesn't happen again, but that isn't

7 coming through.

8 MR. GRIMES: I am sorry if that didn't come

9 through. Indeed, we are looking for the process faults

10 which may have caused the individual design deficiencies

11 that we did find, and we are very concerned with root

12 causes at this time.

13 MR. PARTLOW: Mr. Chairman, the rest of the

14 presentation has to do with some examples of findings. So

15 far they are a mix of paper chase -- although often that is

16 where the problems are, in the paper -- and the hardware.

17 I would suggest you have those. It appears that

18 you are rightfully more interested in the long term general

19 program than the specific findings so far. So I would

20 suggest that we just use the rest of our time to answer any

21 of your questions.

22 MR. WARD: You might say a word about the vendor

23 inspection.

24 Were you just going to do that by example? Is

25 that the idea?

DAVbur

1 MR. PARTLOW: My suggestion was -- yes -- you
2 have the results of the vendor inspection and installation
3 and testing inspections.
4 MR. WARD: Okay, that is fine. Why don't we just
5 have questions?
6 Dr. Kerr.
7 DR. KERR: If you do incorporate this into your
8 system, do you anticipate selecting sites at random, or
9 would you try to select those which have had great
10 difficulty and emphasize those?
11 MR. GRIMES: We try to pick out who we believe
12 might have poor performance. In this case we did not
13 necessarily do that because we wanted to conduct the trial
14 program in a certain time frame, and we picked outages which
15 appeared that we could fit into.
16 But in general, in these other design
17 inspections, for example, associated with the PAT team, we
18 tried to focus on which plants we believed might need the
19 attention.
20 MR. ETHERINGTON: Are the regional inspectors
21 monitoring major repairs like replacement of steam
22 generators?
23 MR. GRIMES: Yes, the regional inspection program
24 has always looked at the specific acts in a lot of the
25 refueling outages and has, for example, looked at the

DAVbur

1 welding program.

2 In fact, on the Dresden plant I believe there is

3 a Region 3 inspection going on concerned with the

4 recirculation piping and specifically looking at some of the

5 work there.

6 We did not focus on that particular piece because

7 the region was already doing it, but we looked at the other

8 modifications to the plant which might have system

9 implications.

10 DR. SIESS: Brian, could you say again just what

11 your objective is and how you will know when you have

12 achieved it?

13 MR. GRIMES: The overall objective was to find a

14 process which would contribute to reactor safety by looking

15 at an area that we believe has a significant potential for

16 introducing safety problems; in other words, the

17 modification process.

18 We varied our approach a little bit at the two

19 facilities, and we are trying a couple of different

20 techniques.

21 For example, in the vendor area we took the

22 vendor people onsite at Dresden, looked at the vendor

23 interface and information rather than just going to the

24 vendor shops for the modifications that we made.

25 I guess what we learned out of this, we will try

DAVbur

to see how we can best use in the overall inspection program.

One thing I already think we have learned is that from the design standpoint it doesn't really have to be connected with a particular outage. It could have just as well gone in between outages and looked at three previous -- the packages associated for three previous modifications. That might have less impact on the utility, for example.

DR. SIESS: I have another question as to why this was tied to outages, but there was a statement made earlier that the need for the program was based on a series of safety problems. That suggested to me that the objective was to eliminate safety problems.

That is once removed from the objective you stated. You stated it in operational terms and not in safety terms.

MR. GRIMES: I don't think it is realistic to believe that we can eliminate all safety problems. I think we can try to put pressure on those points of the system which are not working as well.

DR. SIESS: You can't eliminate it. Can you reduce it?

MR. GRIMES: I believe we can.

DR. SIESS: Can that be taken as a measure of the success of this program?

DAVbur

MR. GRIMES: Yes.

DR. SIESS: When you try something new, it is always a trial program. There has to be some way of evaluating to see if it is accomplishing something. That is why I asked first what are you trying to accomplish. To eliminate safety problems?

Then you will know it works when you have eliminated safety problems.

MR. GRIMES: I guess my measure is did we find anything of significance in the inspection. In both cases I believe that the design team did find items of significant safety significance which, if left uncorrected, could potentially have caused problems in the future if combined with other operational or maintenance or other problems. No one problem is going to cause a core meltdown.

But at Davis-Besse, the operations, the maintenance, and the design all lined up together to give us a problem.

DR. SIESS: That has inherent in it the assumption that any deficiency applied to the regulations can lead to a potential hazard.

MR. GRIMES: I think we are talking about a level of deficiencies which would cause the safety system not to work under certain conditions, for example.

DR. SIESS: Well, paper certainly doesn't come in

that category. Paper comes in at the level of assurance.

MR. GRIMES: Right. What we are trying to do is look at the actual engineering with independent experts to try to see if the design modification process is being carried out in a sophisticated enough way to avoid those problems.

DR. SIESS: I think you made a very important point. This does not have to be done in connection with an outage.

MR. GRIMES: The design part does not. Some of the actual work in testing would have to be done in connection with the outage.

DR. SIESS: That would minimize your impact on the outage?

MR. GRIMES: Yes, it would.

DAVbw

1 MR. WARD: I guess I am troubled. I mean, the
2 test is when they find something. Your sampling is probably
3 far less than 1 percent. If in fact you found some problems
4 and fixed those specific problems, that doesn't mean much,
5 unless you pick something broader in the process.
6 MR. GRIMES: We picked a substantial number of
7 the outage modification packages at these plants to look at,
8 so we believe we have a very representative sample of the
9 work going on in connection with these outages. The 1
10 percent, I was referring to the overall inspection process,
11 much less than 1 percent, when you look at all the
12 activities that go on in all the plants all the time.
13 DR. KERR: Do you anticipate, on the basis of
14 your experience so far, for these glitches to be eliminated,
15 that a team almost has to be on site or that these kinds of
16 mistakes are unlikely to be repeated.
17 MR. GRIMES: That is going to depend on the
18 actions taken by the utility in response to our findings.
19 We put out a report to the Fort Calhoun facility January
20 21st and asked for a response in 60 days, before we took
21 further action on our findings, in terms of any violations
22 or anything like that. They have already told us that there
23 have been some short-term fixes of some things that are
24 obviously needed to be fixed, and they had some process
25 improvements that are going to have to take place in the

DAVbw

1 longer term.

2 Of course, they have indicated their intent to

3 implement, so I believe that there will be substantial

4 improvement in that particular case.

5 DR. KERR: If they follow through on this one,

6 you will assume that you won't need to go back in four or

7 five years, X years or something?

8 MR. GRIMES: It will depend on performance and

9 resources and a number of other things. We have a very

10 limited amount of resources, and we can't sit on the same

11 plant.

12 DR. KERR: I was trying to find out whether you

13 felt that the process was one which would do more than

14 correct errors associated with a particular outage or the

15 process is one that is likely, if followed through by the

16 utility, to make it unnecessary to do this thing on the next

17 or the next outage.

18 MR. GRIMES: I can't guarantee that, but that is

19 my hope, yes.

20 MR. PARTLOW: If and when this is fully into our

21 regional inspection program, it will clearly not be a team

22 inspection at every plant every outage.

23 DR. KERR: I recognize that it is impossible.

24 MR. PARTLOW: But we do take the results of

25 something like this. It is only looking at specific

1 modifications or specific systems, and we find problems that
2 we believe may be applicable for other systems and other
3 procedures in the plant. We ask the utility to address
4 that, and we take their response, and they do address it on
5 a plantwide basis normally, and we assume that it does
6 become a part of their ongoing program.
7 MR. WARD: Jesse, Carl and Glenn.
8 MR. EBERSOLE: You just said that it will not
9 develop into every plant and every outage. What percent of
10 the plants and what percent of the work at the plants are we
11 talking about? Is it so small that it is hard to get a feel
12 for what might be the worst end of the performance spectrum?
13 MR. GRIMES: At a particular plant?
14 MR. EBERSOLE: Yes.
15 MR. GRIMES: It depends on the design process.
16 We have two different situations. Fort Calhoun is a small
17 utility that does its own design work in-house, so there we
18 picked about 15 packages, modification packages, I believe,
19 and it looks to us to be representative of their design
20 process, and we looked at those. We think we've got a
21 representative sample from their design process.
22 At Dresden, it is a large utility that primarily
23 right now is contracting out to smaller design organizations
24 where we tried to pick samples which were representative of
25 those smaller design organizations and looked at each of

DAVbw

1 those modifications, and we drew some conclusions on the
2 adequacy of the Commonwealth technical overview of those
3 contracted design efforts, which we found deficient in some
4 cases.
5 MR. EBERSOLE: What would you have found at
6 Davis-Besse and SONGS, had you gone there?
7 MR. GRIMES: I guess I can't forecast. I hope we
8 would have picked up some problems at Davis-Besse. SONGS,
9 if you are speaking of the check valve aspect of SONGS, it
10 may have been a maintenance testing rather than
11 modification.
12 MR. WARD: Carl?
13 MR. REED:
14 MR. MICHELSON: I realize you didn't have an
15 opportunity to go through your examples, so if you could
16 tell me, would any of these examples which you would think
17 would be truly safety significant, if so, would they have
18 been found or could they have been found by a higher level
19 overview, or did it take the in-depth approach?
20 MR. GRIMES: In my view, the things we found took
21 an in-depth approach to find.
22 MR. MICHELSON: And they were truly safety
23 significant?
24 MR. GRIMES: I think they were, and they had
25 substantial safety significance.

MR. REED: I am sympathetic to the fact that modifications are probably being made that are appropriate; however, I worry about the proliferation of committees -- I'll call them committees of inspectors after committees of inspectors after committees of inspectors.

I recall that Yankee Rowe was built with no regulatory -- NRC regulatory inspections or inspectors.

It has always appeared -- like welfare, you keep pouring money into welfare, and you never cure the problem.

It seems to me, we are proliferating committees, and we never get through to the problems. Now we have hear a lot in the last few years about how the Japanese do this. I don't think they proliferate committees to do inspections. I think they utilize responsibility and competence in their top-level people. I worry about all these committees, because they dilute the activities on the job site, and pretty soon, we will have one worker and 1000 overseers.

DR. SHEWMON: Maybe only 100.

MR. WARD: Okay, Mr. Grimes. Thank you very much. Mr. Partlow and Mr. Konklin, thank you.

Let's go on to our next topic, which is security provisions at nuclear facilities.

Dr. Mark? I guess Mr. McCorkle is to lead off.

DR. MARK: I would like to make a few comments.

DAVbw

1 MR. WARD: Gentlemen, Dr. Mark has some comments
2 he would like to make.
3 DR. MARK: We need, I think, to be looking today
4 for any comments we feel appropriate on the insider package
5 rule, which is about to come forth from the Commission.
6 This topic is not new. It has been going on since about
7 1977. We have met on it several times. We've seen a fair
8 amount on the nature of the things which are prepared by the
9 Staff to be forwarded to the Commission.
10 I believe we have generally approved the range
11 of provisions that are still the main provisions being
12 offered.
13 There are a few questions on which we wish to
14 comment again, such as the failure to identify what it is
15 that one does, in the event that a nonnational is employed
16 for the five-year background investigation. In fact, the
17 proposal doesn't even say a five-year background
18 investigation is required.
19 There are a couple of things on which we might
20 wish to comment.
21 The main thing, however, the Staff has proposed
22 and has made some arguments that this should be the draft of
23 a rule, and some representatives of industry say that they
24 have provisions which would serve the same purpose, were
25 the Commission to go ahead with a policy statement.

DAVbw

I think that is the main thing that we need ot prepare ourselves to comment on in today's review.

Right now, I would like to have Mr. McCorkle tell us what they have in mind in that package. This was heard by the subcommittee over a month ago, but not by the full committee.

There are three items: the access authorization component, the search requirement, and some miscellaneous features such as vital areas and provisions to suspend regulations during emergencies.

I believe on those things, Mr. McCorkle, you need say rather little.

The main focus of our attention, I think, will be on the access authorization.

Would you go ahead.

MR. MC CORKLE: Thank you very much.

Recognizing that we have fairly substantial number of items to cover, I have scaled down the information occurring on the Vugraphs and recognizing the familiarity of most people here with the major portions of the rule.

(Slide.)

As Dr. Mark said, the rule is comprised of three main components. They are all interrelated. The search requirements rule, the miscellaneous amendments rules and the access authorization rule.

DAVbw

1 The search requirements and the access
2 authorization program of this package are more or less
3 interrelated, since the time of 1977. At that time, the
4 Commission responded to a petition from the industry to
5 forebear the institution of pat-down searches. It indicated
6 that instruments' searches would be good. They evaluated
7 protection against the insider as adequate. Pending the
8 Staff's development of a truthworthiness program. The
9 truthworthiness program is the access authorization rule.
10 That is important to bear in mind for subsequent portions of
11 the presentation.
12 The Commission clearly stated at the time, that
13 the purpose of the truthworthiness program was to decrease
14 the degree of assurance that would be provided against the
15 insider threat at power reactors.
16 (Slide.)
17 I'll spend a very brief time on the search
18 requirements as they are proposed, and as we now propose to
19 publish them to the Commission and miscellaneous
20 amendments.
21 The search requirements engendered very few
22 comments. It seems that those we did have ranged from one
23 extreme to the other. That is, no searches should be
24 required, and the other end of the scale, searches should
25 not only be required by instrument, but a percentage of

DAVbw

1 people should be subjected to pat-down search.

2 In the absence of any compelling reason for the

3 latter, and not being convinced that suitable argument had

4 been presented for abandoning search altogether, we stayed

5 with our proposal, that is, a 100 percent equipment search,

6 except for on-duty law officers who are permitted on site in

7 connection with their official duties. Then a pat-down

8 search would be utilized only for cause. That is, if the

9 instrument search indicates that there is some question as

10 to whether or not further search is required, then a

11 pat-down search would be instituted, or if the equipment

12 fails, then a 100 percent pat-down search.

13 DR. LEWIS: Why do you except on-duty law

14 officers? Surely, there is no reason for them to carry

15 their weapons on site, if the site has previously been

16 sterilized for weapons. Does that mean that they can carry

17 a bomb, in addition to their weapons, in a briefcase and go

18 through without search?

19 Why do you except them? They are people who have

20 no stake in the plant, and very often, you don't even know

21 them.

22 MR. MC CORKLE: On-duty law officers are

23 generally known to the site. We say "on duty." They are

24 there for some purpose. I think in the general scheme of

25 things, part and parcel of the uniform of the law

1 enforcement officer, whether it is an FBI man who is on the
2 site, or whether it is from the local or state police, that
3 part of their uniform is their weapon. To take their weapon
4 from them, I believe is an unreasonable thing. Also, law
5 officers generally object to that quite violently, because
6 they are there to support the site.
7 DR. LEWIS: I understand that part of their
8 uniform is their weapon and part of their lore is keeping
9 their weapon, but part of your job is to protect the site.
10 And I can't see the argument for letting on-duty law
11 officers, generally known to you but not always known to you
12 -- you know, they carry an ID that anyone can make an idea.
13 And at the same time, searching the vice president of the
14 goddamn company, who feels he owns the place too. I really
15 don't see the rationale for that. In many of the military
16 losses, the people involved had been the people in the
17 security apparatus. They are uniquely possessed of wide
18 access and uniquely also not committed to the product.
19 So I don't see that at all.
20 MR. MC CORKLE: It is a judgment call, and there
21 is obvious reason to debate, I think, some rationale on most
22 sites.
23 DR. LEWIS: Can a D.C. cop walk into EOB with his
24 gun? Never mind.
25 MR. REED: I am not opposed to that in small

DAVbw

1 rural areas, certain officers are well known, but a frequent
2 visitor, I guess you would call him a law officer is the
3 game warden, who carries a weapon. Would you say a game
4 warden and his weapon are perfectly all right to go in to
5 inspect the intake structures and the fish kill and these
6 kinds of things?
7 MR. MC CORKLE: I had not contemplated game
8 wardens, but in a general sense, if we are talking about the
9 traditional law enforcement officer --
10 DR. SHEWMON: There is an older tradition against
11 poaching.
12 MR. MC CORKLE: We hadn't thought of the game
13 warden, but I know the area you came from, Mr. Reed, I guess
14 they would have a game warden up there. But we did not
15 contemplate that. I would say, no.
16 MR. WARD: When you say in performance of
17 official duty, did you mean that he's been called in to
18 react to something that is going on in the plant, or that he
19 is attending a briefing?
20 MR. MC CORKLE: It could be either. We encourage
21 the police to have law enforcement officers come by for
22 briefings and for site indoctination tours. And I believe
23 that when a law enforcement officer is involved in a
24 situation of that type, his expected visit for the local
25 enforcement, I think it is logical not to subject him to

DAVbw

1 the search.

2 DR. MARK: How about senior resident inspectors

3 of the NRC?

4 MR. MC CORKLE: Senior resident inspectors don't

5 carry weapons, I don't believe.

6 DR. MARK: A week ago Sunday, in the Rancho

7 Seco.

8 MR. MC CORKLE: But was he supposed to have the

9 weapon?

10 DR. MARK: Apparently, he was picked up.

11 MR. MC CORKLE: And subjected to a search. NRC

12 personnel are subjected to the initial search on entry to

13 the site like any employee.

14 MR. REED: I think that was a very desirable

15 change, that NRC people have to go through searches.

16 MR. MC CORKLE: The equipment used in the

17 search -- in other words, the equipment to detect metal or

18 explosives --

19 DR. REMICK: When you say 100 percent equipment

20 search, what is the definition of equipmemt?

21 MR. MC CORKLE: Everybody goes through the

22 equipment. In other words, they are required to pass

23 through the detector. In the event of failure, then it is a

24 100 percent pat-down search.

25 DR. SHEWMON: We wondered whether you were taking

radios. It was a misunderstanding.

DR. REMICK: In here somewhere, is there looking at any package or briefcase?

MR. MC CORKLE: Yes, there is a package search. They are subjected to x-ray, when they go in.

MR. BURNETT: George, I would like to add something. I would like to address Harold Lewis' question about the on-duty law enforcement officer.

According to our rules and the contingency plans that are submitted to the NRC, law enforcement agencies up to and including state response and FBI response, is part of the protection system of a reactor. As such, these officers visit the sites and become familiar and get into a working relationship with each site. That is reviewed by several groups within NRC. So when they respond, they are expected to respond with weapons. So I just want to make it clear that they are part of the protection system.

1 MR. MICHELSON: It is quite evident that those
2 kinds of people would be well-known already and would be
3 announced.
4 The one that bothers me a little bit is the
5 unknown, unannounced presence suddenly of an FBI agent at
6 the door.
7 Why should he be let in with a weapon? Nobody
8 knows him. Nobody knew he was even coming.
9 MR. BURNETT: I am unaware that that has
10 happened.
11 MR. MICHELSON: Why not put it in the rule then,
12 that an announced and unidentified, in the sense if nobody
13 knows you --
14 MR. BURNETT: It could very well be that that
15 should be tidied up. We ran into the problem, particularly
16 with the FBI, because they have rules and regulations that
17 they must stay armed "at all times."
18 That was the motivation for this particular part
19 of the rule.
20 MR. MICHELSON: That is the part that bothered me
21 a little bit.
22 MR. MC CORKLE: We can certainly look at that
23 aspect on the unannounced and unidentified unknown.
24 DR. MARK: The word is presumably supposed to
25 be covered by "on duty" in part.

1 MR. MC CORKLE: Yes.

2 DR. MARK: There is no clarification as to how do
3 you know if this guy is on duty or he is just a policeman
4 out for a walk.

5 MR. MC CORKLE: In connection with the official
6 duties, it is difficult for me to presume that the local law
7 enforcement people would be expected to drop by on their
8 rounds.

9 Some do, incidentally, on their rounds. They
10 drop by to have a cup of coffee or something, which we think
11 is very desirable. You have the others who come by for
12 indoctrination. That is part of the licensee/law
13 enforcement relationship where they are encouraged to do
14 so.

15 So we would consider that all of these things are
16 encompassed by the phrase "on duty."

17 I would like to move on to the miscellaneous
18 amendments.

19 As a result of public comment, we have made one
20 change. Almost all of the comments concern the vital island
21 concept.

22 The main change that we made was to drop the
23 vital island concept the way it went to the Commission. The
24 primary reason for that involves the fact that the
25 Commission had a vital area committee which was restudying

1 the identification of vital equipment and the assumptions
2 that would be used to identify such equipment.
3 We felt that it would not be appropriate to come
4 out with a rule that might drive changes in configuration
5 without having final action on the committee's
6 deliberation.
7 These are fairly well along. They may come out
8 before too long. It may be some time before they could be
9 implemented.
10 At that time we plan to reintroduce the vital
11 island concept. Even barring that, we would have made some
12 changes in the supporting guidance because there was some
13 confusion as to exactly what the vital island concept was,
14 whether or not it was required to go to it and make changes
15 in plant configuration or whether it was optional.
16 We always felt it was optional, and that will be
17 clarified at such time as we reintroduce the concept.
18 I would like to move on then to the access
19 authorization portion of the rule package --
20 (Slide.)
21 -- which we think is of course the most
22 controversial and the most subject to discussion.
23 Just to remind you, it has three principal
24 components -- background investigation, psychological
25 assessment, and behavioral observation.

1 (Slide.)

2 Now, I was asked to discuss current industry

3 practice regarding these before I went into an analysis of

4 public comment and changes we may have made as a result of

5 public comment.

6 You will note that the first bullet indicates

7 that most licensees have screening, psychological

8 assessment, and behavioral observation.

9 Now, the question, therefore, could logically be

10 asked: why do we need the rule?

11 One word describes that: standardization. There

12 is a lack of it.

13 When they commit to a screening, an analysis of

14 the plans show that in some instances that does not include

15 a criminal records check of any type, either locally or with

16 the state police.

17 Some licensees call screening a so-called "good

18 guy" letter, indicating that the individual had been

19 employed with a good employment record for a period of three

20 years.

21 Other facilities have a good screening program

22 that goes through reference checks, credit, right on through

23 education, past employment.

24 So there is a total lack of standardization,

25 which would indicate that there is a need for a rule and

1 supporting criteria.

2 Some of the plants describe in some detail the

3 extent of their programs for each of these components.

4 Those are generally the ones that have the better programs.

5 Some only make a general commitment to follow

6 ANSI-1817 or 3.3, with no indication as to what extent these

7 suggestions or guidelines set forth in the ANSI standard are

8 followed.

9 So again we are not in a position to say that

10 there is any standardization on any of these.

11 MR. MICHELSON: Along the lines of current

12 industry practice, you have a practice of differentiation

13 between employees onsite and vendor personnel, contractor

14 personnel, et cetera.

15 MR. MC CORKLE: There is just as wide a variance

16 as to how they treat those as to how they treat their own

17 employees.

18 MR. MICHELSON: Is that a source of even more

19 concern?

20 MR. MC CORKLE: Yes, it is a source of concern.

21 In some instances the only thing they have for vendor

22 personnel or temporary employees is a letter from the

23 union.

24 Yes, it is of concern. That is one of the things

25 that the rule addresses.

MR. MICHELSON: The union presumably is the good guy, is that it?

MR. MC CORKLE: Yes, sir.

DR. MARK: If someone were following ANSI 3.3, would he then, would you suppose, be meeting the requirements that you would be proposing?

MR. MC CORKLE: The criteria we are proposing are a little more stringent than those of 3.3. They parallel each other in many respects.

DR. MARK: In what way do they differ?

MR. MC CORKLE: I think the discussion we will have here when we analyze the NUMARC guidelines compared to what we propose, it will generally reflect the difference. So I think that will handle that.

But 3.3 comes close. I won't say that it doesn't, but there are differences in the criteria that are applied to the criteria as to how you apply them.

If you commit to anywhere from one to three of the components of the program -- some say we will do psychological assessment and some say we will do behavioral observation, some say both. It is interesting -- I didn't put it on the chart -- that we have two licensees who submit their employees to a polygraph in addition to other elements of the program.

One licensee, of course, is very unique. He has

1 no program at all.

2 DR. LEWIS: That is another matter.

3 Could I just be sure I understand?

4 After the first hire, though, the only component

5 that is active is behavioral observation?

6 MR. MC CORKLE: Yes, that is absolutely correct.

7 DR. LEWIS: So a man who becomes embittered

8 because he has not been promoted fast enough after 20 years,

9 it is only a question of having the supervisor notice that

10 he is embittered. That is the only connection.

11 I just wanted to be sure.

12 MR. MC CORKLE: Again, the bottom bullet here

13 really says it: no standardization. That is the problem

14 that is out there today. That is why we feel that a program

15 is needed, a formal program.

16 (Slide.)

17 Public comment. We had a tremendous number of

18 comments. We had 143, to be exact.

19 As to be expected, each letter of comment might

20 cover as many as seven to eight issues. Some were

21 relatively simple and straightforward, but the majority of

22 the comments were of such a nature that it was obvious that

23 we had to clarify some of our regulatory requirements and

24 the supporting guidance.

25 They were not so much substantive in nature as

they were requiring clarification as to the access authorization program.

It was quite clear from the comments received that many licensees already had one, two, or all three components of the program, and their comments ranged from enthusiasm for all portions of it, some felt that we could perhaps modify or slack off. There was a broad range. It is hard to characterize exactly how they went.

The NUMARC proposal. We call it the NUMARC proposal for a reason I will get to later, but essentially that called for an industry oversight of the program based on a policy statement to be issued by the Commission endorsing some guidelines. I will again discuss that in more detail later.

I think I have already covered the search requirements and other miscellaneous amendments.

(Slide.)

I would like to go on to some of the major issues that were brought up by public comment and some of the changes we made in the rule as a result of those comments.

Now, these items are not all inclusive. There are many small changes. But we felt these were somewhat more significant and worthy of note.

First of all, grandfathering. We have always had the grandfathering provision in, and as it went out for

1 public comment, we suggested that everyone be grandfathered
2 who is an employee on the effective date of the rule. There
3 were numerous commenters who felt this was too lax.
4 We adopted one suggestion which seemed to hit a
5 good middle ground and gave the staff some assurance, and
6 that is that we grandfather everyone who was employed in a
7 location where their physical protection plan committed to a
8 screening program consistent with one of the industry
9 standards, 1817 or 3.3. All such people in that category
10 would be grandfathered the way the rule has presently been
11 revised and forwarded to the Commission.
12 MR. MICHELSON: Could you clarify what you mean
13 by grandfathered?
14 MR. MC CORKLE: Grandfathering means anybody that
15 is on board.
16 MR. MICHELSON: Grandfathered from what, from any
17 behavioral observation?
18 MR. MC CORKLE: No, no, grandfathered as far as
19 the psychological assessment and the training program is
20 concerned. Behavior observation would still pertain.
21 Psychological assessment -- I should have stated,
22 but it is to be expected -- numerous comments, I would say
23 the great majority of them concerned psychological
24 assessment. They ranged from psychological assessment is
25 the worst thing that ever happened to it is great. That is

1 to be expected.

2 But people in the behavioral science field all

3 endorse it heavily. Some licensees felt it was a great

4 preemployment screening tool and are very much in favor of

5 it. Others were just the opposite.

6 Some of the comments and suggestions were that

7 there be two psychological tests, separate and apart.

8 Others said that the rule with its guidance was overkill and

9 we should only have one test.

10 Based on information that we obtained from

11 studies that had been accomplished for the Commission, it

12 indicated that there was a need for two tests, one to

13 compensate for the blank areas and the other vice versa,

14 that we stay with that.

15 We had other suggestions that said in all cases,

16 even when the evaluation of the results of the test would

17 not indicate a problem that a clinical interview should be

18 conducted. We felt that was overkill. We stayed with the

19 clinical interview only when it was indicated by the

20 professional evaluation of the test results.

21 Interim clearance. One provision in the rule, as

22 it went out, called for an interim clearance providing all

23 other elements of the screening program were conducted up to

24 six months without obtaining results of the criminal check.

25 It was recognized that the criminal checks sometimes take

1 time.

2 Commenters suggested that they also ran into

3 similar problems with the military history check. So we

4 added that to the criminal check as appropriate for a lag of

5 up to six months in granting clearance.

6 DR. MARK: On what basis was six months

7 specified?

8 MR. MC CORKLE: I think experience generally with

9 the time between request and response. In connection with

10 criminal history checks, I know that some of those responses

11 are administrative in nature. For instance, you might have

12 delays because the fingerprint card was improperly

13 accomplished. The law enforcement agency checking their

14 files as a result of that will have to send it back. Then

15 you also have backlogs on investigations, and they cannot

16 put it on the front burner.

17 We told them that six months was a reasonable

18 period providing all other elements of the check had been

19 conducted; that is, credit, education, previous employment,

20 and references, which would include of course a throw-off.

21 DR. MARK: An alternative approach would perhaps

22 be to ask that the employer have filed requests for a

23 response within some time and get the response when it

24 comes.

25 It seems to me that nobody can guess whether six

1 months is going to get an answer from one or another
2 military or criminal authority.
3 MR. MC CORKLE: Of course, we anticipate that
4 this is a central check. Military history is checked from
5 one place.
6 DR. MARK: Do they guarantee to get them out in
7 six months?
8 MR. MC CORKLE: Nobody will guarantee it, but
9 generally speaking, six months is a reasonable period of
10 response from the Military Records Center in St. Louis.
11 DR. MARK: I vaguely understand that, but the
12 responsibility for getting the answer back can't be
13 controlled by the employer. It is controlled by the
14 St. Louis office or controlled by the Dade County Police
15 Department in Florida, or wherever.
16 MR. MC CORKLE: I would certainly believe that if
17 I was a licensee and were faced with that problem of a delay
18 up to six months I would be able to say that I had made a
19 good faith effort and that I had made follow-ups to it.
20 DR. MARK: And is it then guaranteed to say okay?
21 MR. MC CORKLE: We don't say it in every
22 instance, but the licensee on his own initiatives may say,
23 hey, this guy is all right, anyway. I mean, he can come in
24 and ask for an extension. There is nothing that would
25 prohibit that.

But I would judge this would be the exception rather than the rule, and I think quite a rare exception, to extend this beyond six months under present circumstances.

Now, if experience were to prove and it shows a pattern across the industry that the FBI, for instance, if we finally wind up, which I believe we will or there is a good possibility we will, to have a central criminal records check. If they get backlogged to eight months, then we will have to change that to eight months.

DR. MARK: Clearances are running close to a year now.

MR. MC CORKLE: That is for a full background investigation.

DR. MARK: For the full background check, and it used to be reasonable to assume that they would come on in three months.

MR. MC CORKLE: But we are not talking about a full background check.

DR. SHEWMON: It has gone up by a factor of four.

MR. MC CORKLE: I just recently checked on it in the last couple of days, in fact yesterday, in connection with another matter and was told that the check of the criminal files could be conducted on the average in about 60 days.

1 That may be subject to change. If it is subject
2 to change, I think this provision has to be altered.
3
4
5
6
7
8
9
10
11
12
13
14
15
16
17
18
19
20
21
22
23
24
25

1 Certainly, we should not expect people to have a
2 requirement that is impossible to fulfill.
3 MR. WARD: But if you say, if the provision is
4 altered, does that have to be a change in the rule?
5 MR. MC CORKLE: I think it could probably be
6 handled through an I&E publication.
7 Could that be handled on a case basis?
8 VOICE: I wuld think so.
9 MR. WARD: I think that is what Carson is
10 suggesting. There ought to be some flexibility with rules
11 to permit accommodating what real experience indicates.
12 MR. MC CORKLE: Perhaps we could consider
13 altering the guidance to suggest that if it looks like we
14 are not going to end it in a six-month period, a good faith
15 effort should be enough for an alternative, should be
16 enough. We could look at that.
17 DR. MARK: The employer, the utility, can, in
18 fact, control this, when they file the proper papers and
19 requests. They cannot control when they get the answer.
20 MR. MC CORKLE: I agree. Yes, sir.
21 DR. SHEWMON: Has a poor credit rating,
22 correlated with psychological instability or criminal
23 tendencies, or is it just a number that is easy to get?
24 MR. MC CORKLE: You mean the credit? Oh, credit
25 is merely a part of the screening program.

DR. SHEWMON: Why, is my question?

MR. MC CORKLE: I think a trend of bad credit shows a certain degree of unreliability. And when I say I think that, I am merely parroting what experts in the field think. A credit rating is an integral part of background investigations and has been accepted as such and an reliable indication over a period of years by other government agencies.

I would presume that most prospective employers would look at employees who had a consistently bad rating, before they put them in a sensitive position. I don't think that it would disqualify somebody for a one-time entry in their credit file for an overdue payment.

Again, we are looking at a trend. We are not looking at individual cases here.

DR. MARK: Would they take a thing signed by the president of Old Colony Savings & Loan Association?

MR. MC CORKLE: That is, if you can get to him.

DR. LEWIS: How would you handle somebody who, in exercising his civil rights, belongs to all the antinuclear organizations in the country, but whose credit is in good shape?

MR. MC CORKLE: Again, I am not in a position to respond to that, because the criteria for consideration by the licensee in granting access, are spelled out. It's a

DAVbw

1 judgment on the part of the licensee.

2 I do not -- I would not expect that our criteria

3 that we publish would indicate that a member of an

4 antinuclear outfit, who says I am a member of it would be

5 disqualified from employment, but that would a judgment call

6 on the part of the prospective employer, nor do we indicate

7 on there that it's a disqualification to be a card-carrying

8 member of the Communist Party.

9 DR. LEWIS: I have strayed away from politics and

10 gone into antinuclear things and created an individual who

11 is a member of all antinuclear organizations in the country,

12 who is dedicated, vocal, determined, but within his civil

13 rights. You have a problem.

14 MR. MC CORKLE: Well, this is pre-employment;

15 right? As I say, this is a judgment call on the part of the

16 prospective employer. I don't think it is appropriate for

17 the NRC to make that determination.

18 MR. FONNER: My name is Robert Fonner. I am

19 Deputy Director of the Regulations Division. I am going to

20 talk about the field procedure a little bit later on, but I

21 think I can answer this question. The way the rule is

22 structured, if, to take your case, a person who belongs to

23 every antinuclear organization in the country and the

24 employer says, I don't want that person in the plant, the

25 access rule has nothing to do with the employer's decision

in that case; however, the employer may not say, if the person is an employee already, you can't have access because you are antinuclear, unescorted access, and then cite the rule. He does it on independent grounds.

DR. LEWIS: So it's in preemployment screening.

MR. FONNER: The rule does not reach into that area of behavior.

DR. LEWIS: So all these things that we are talking about are post-employment screening.

MR. FONNER: That is correct.

MR. MICHELSON: I misinterpreted that. I thought these were screening techniques for potential new employees, as well.

MR. FONNER: I can answer that, as well. We do answer that particular comment as it was made, and we point out that while the rule is addressed to employees, it is not intended by the Commission as a preemployment screening device. Nonetheless, the rule does not prevent an employer from making the ability of a prospective employee to pass the rules criteria as a condition of employment.

MR. MICHELSON: But you remain silent on whether it is a requirement.

MR. FONNER: That is correct. The licensee would have the option of saying I will hire you, if you can pass these road blocks.

MR. MICHELSON: What you do is require that immediately after employment that you then have a criminal check.

MR. FONNER: He doesn't grant the access authorization until after the person is employed.

MR. MICHELSON: Okay. It's a fine point.

MR. MC CORKLE: On the point of access authorization, I misspoke. It is pregranting of access.

MR. BURNETT: You can be an employee at the licensee and not have access to vital areas and never have to go through this process.

DR. LEWIS: You know, I don't want to stretch this out, but many organizations that saw we are working on real classified things, hire people before they send in the request for clearance. There is an understanding that if the request for clearance is denied, which, although it takes much longer, happens less often these days, you know, they can't do the job they were hired for, and they will be put off in some other job, and their employment will not be terminated, but certainly the contract of employment will not have been fulfilled, and that's kind of understood among people. It works if you have an organization which does some classified work and some unclassified work. So there is slots for them that don't run into trouble.

But when you are running a nuclear plant, in

which it is true there are grades of sensitivity of access, it is a little bit harder, if you hire a guy as a prospective reactor operator, and it turns out you can't let him near the reactor.

MR. WARD: Let's see. I don't think there are grades of sensitivity of access, are there?

DR. LEWIS: There are vital areas and nonvital areas.

MR. MICHELSON: Unescorted, though, versus escorted.

MR. BURNETT: The rule applies to entrance into the protected area.

MR. WARD: Unescorted access.

MR. BURNETT: As you know, the protected area is usually a smaller -- when we wrote the rule, we had thought, vital, but the industry indicated to us that they didn't want to have two standards on site. They wanted one standard. So we drew the line at the protected area, but at most sites -- I can't think for them all, but at a lot of sites, you have a protected area, which is a smaller portion of the licensee reservation -- you follow me -- and they may have administrative people -- I don't know what all -- outside the protected area.

If they never were intending to enter the protected area, unescorted, this rule does not apply to

1 them.

2 DR. LEWIS: I am glad you clarified that. Glenn

3 was shaking his head back and forth.

4 MR. REED: I couldn't quite see the protected

5 area as a smaller portion.

6 MR. BURNETT: I am just saying, talking about the

7 licensee reservation, many that you visit in, they will have

8 a visitor's center on their reservation, on the

9 owner-control property.

10 MR. REED: I've never used the term

11 "reservation."

12 MR. BURNETT: I'm sorry. Owner-controlled

13 property.

14 MR. MC CORKLE: I believe I fell into a trap by

15 saying "preemployment." Preemployment is on my mind,

16 because quite a few licensees in the public comment period

17 commented that they believed that the psychological

18 assessment was a valuable preemployment tool and is used as

19 such by many. That's right.

20 DR. MARK: I'm still a little bit alarmed or

21 concerned.

22 Protected area, I think is defined in CFR --

23 MR. MC CORKLE: 10 CFR 73.

24 DR. MARK: 73. And the protected area is where

25 you first have to show your entry card.

1 MR. MC CORKLE: That is exactly right, but there
2 is another controlled area in some facilities around that.
3 There is a difference. Some facilities keep their
4 administrative offices outside of the protected area, so
5 they don't have a problem.
6 DR. MARK: That is a possibility in the visitors'
7 center, for sure. But the vital area we are concerned with
8 is the place where you need to have a key or a card or
9 something. So I am worried a little bit about Burnett's use
10 of "protected area."
11 MR. WARD: What they are saying is, the same
12 clearance criteria are used for both protected and the
13 smaller vital area.
14 Isn't that what you are saying?
15 MR. MC CORKLE: That is exactly right. The same
16 criteria.
17 MR. MC CORKLE:
18 DR. LEWIS: Carson, what you said was closer to
19 what I now understand, is that this is an administrative
20 definition for the purpose of this role. There are still
21 degrees of sensitivity in the areas which is as it should
22 be.
23 MR. MC CORKLE: Appeal procedures, we had a broad
24 scale of comments on. As far as the recommended rule is
25 concerned, we left them in. I will discuss some of the

1 ramifications of this later after my introduction.
2 Mr. Fonner is going to discuss those.
3 I promised earlier to talk about industry
4 self-regulation, which we call the NUMARC initiative.
5 Actually, several groups came in with similar suggestions
6 for industry self-regulation. NUMARC made a formal
7 presentation concerning this to the Commission, and since
8 that time, for the purpose of simplicity, we call it the
9 NUMARC initiative.
10 As a result of the Commission meetings, the Staff
11 is directed to work with the NUMARC working group to develop
12 a set of guidelines which could possibly be used to replace
13 the regulation with the guidelines to be endorsed and a
14 policy statement to be issued by the Commission
15 At that time, it is our understanding that INPO
16 would provide oversight to those guidelines to see if they
17 were being properly followed and enforce them. This was to
18 encompass a two-year trial period, at which time
19 determination would be made as to whether or not the policy
20 statement approach was working or whether a regulation at
21 that time then should be issued.
22 I will get down to a little more on this point in
23 a few minutes.
24 I think now it is appropriate to look at the
25 differences we wound up with on the guidelines versus the

1 rule. These guidelines have been worked out with the NUMARC
2 working group in several meetings held in Silver Spring.
3 MR. WARD: George, can I interrupt just a minute?
4 We have a little bit of a schedule problem.
5 MR. MC CORKLE: I'll go through this as fast as I
6 can.
7 DR. REMICK: Clarification. I am not sure I
8 understand "guidelines." Guidelines is what NUMARC is
9 proposing?
10 MR. MC CORKLE: What NUMARC calls. I really
11 don't believe that these are the significant parts of the
12 appeal procedures the guidelines have no provisions for.
13 The rules says there is. We wind up with a question mark,
14 asd a result of the last meeting with NUMARC in Inspection
15 and Enforcement, if the guidelines were used, and I will get
16 to an alternative to that in a moment, as opposed to a rule
17 which, of course, provides for NRC regional inspection and
18 enforcement.
19 (Slide.)
20 Okay. The Staff has two alternatives. It
21 presented two alternatives to the Commission for their
22 consideration. One, you can adopt the policy statement
23 approach or the rule. The Staff recommended the rule fdor
24 several reasons. The last two of these are the most
25 important. I just will touch very lightly on those

DAVbw

1 procedures. Consideration of the union views were presented
2 at a meeting in December of '83 to the Commission, although
3 the alternative for the NUMARC approach was not in effect at
4 the time. The IBW, which I understand speaks for a large
5 number of employees in the industry, made the statement that
6 they preferred any program of this type to be run by the
7 Nuclear Regulatory Commission and not by industry. That is
8 paraphrasing it very briefly. That is what they wanted. We
9 believe the rule provides a consistency with other required
10 safeguards programs.
11 It would appear to be somewhat anomalous to us,
12 to pull out this one segment of the entire safeguards
13 security approach and say, this should be industry run,
14 whereas all the rest are handled by the NRC. We believe it
15 provides consistency with responses we have made to the
16 congressional inquiries in the past. We have had several
17 expressions of concern concerning the insider problem on the
18 Hill. We are working on a program for access authorization
19 to increase our confidence in our ability to protect against
20 the insider. It provides a standardized transferrable
21 program for reciprocity between utility.
22 As I said, the last two are the most important.
23 The oversight word is the key word here in my mind. And as
24 I indicated at the last meeting of NUMARC, they had
25 indicated that they did no plan to exercise oversight over

DAVbw

1 the program. That would be totally unacceptable with no
2 oversight and enforceable, so far as the NRC is concerned,
3 but as an alternative to the suggestion that the policy
4 statement could be issued, that the number of utilities
5 could be directed to amend their physical protection plans
6 to incorporate the guidelines, and that as part of the plan,
7 they would be inspectable and enforceable by the NRC.
8 At this point, I'd just like to make a couple of
9 observations.
10 First of all, I am not too certain that I would
11 be totally comfortable with oversight by INPO, if they came
12 back into that posture. I base this only on the observation
13 made and the difficulties which apparently have been
14 experienced in exercising oversight of a relatively simple
15 program, relatively speaking, insofar as the access
16 authorization of programs is concerned, and by that I mean
17 fitness for duty.
18 There have been some problems, and I'm not saying
19 they couldn't be resolved.
20 The second portion that presents problems to the
21 Staff. If we incorporate the guidelines by reference into
22 our protection plan, then perforce, it would be necessary
23 from the legal perspective to again institute an appeal
24 proceeding.
25 I am not competent to discuss this. That brings

DAVbw

me up to Mr. Fonner, who is going to handle the comments concerning the appeal proceeding.

MR. MICHELSON: You must have mentioned it, I must have missed it. INPO has apparently backed off from wanting to provide the oversight.

MR. MC CORKLE: That was what I was told.

MR. MICHELSON: So right now NUMARC suggests no oversight?

MR. MC CORKLE: They suggest oversight through incorporation of the guidelines in the plants.

MR. MICHELSON: Not on their part, I guess I should say. You'd have to come back to NRC for oversight.

MR. MC CORKLE: Yes.

DR. MARK: A slightly tangential question.

Supposing you have a rule which provides oversight with prompt, effective remedial action exercised, I presumed by either I&E or NMSS Staff.

MR. MC CORKLE: It would be I&E.

DR. MARK: How many FTEs would be required, as compared to working it the other way?

MR. MC CORKLE: We do have the FTE requirements in a paper. Do you recall?

MR. BUSH: I am Loren Bush from I&E. The rule states that the access authorization rule would require 1.0 Staff years for current plans and another 1.0 Staff years

DAVbw

for plants coming on line within the next five years, for a total of 2.0 Staff years.

DR. SHEWMON: That is one per plant, not one for the whole system?

MR. BUSH: The whole system.

DR. MARK: Two employees could do the whole thing -- all this probably effective, remedial, et cetera -- whereas if the NUMARC initiative were adopted it would require about three or five?

MR. BUSH: Are you talking impact on NRC resources?

DR. MARK: Yes, clearly.

MR. BUSH: It would probably take close to 1.0 staff-years for the NRC to monitor the INPO and to sample those.

DR. MARK: So you are saying at a maximum you might say one man-year per year if you went with NUMARC or if you went with INPO?

MR. BUSH: That is correct.

DR. CARBON: Why does INPO not want to have the old standard?

MR. WARD: We are going to hear a presentation from NUMARC in a few minutes. So perhaps we will get that answer.

MR. REED: I question that the oversight hasn't been in place very ambitiously and aggressively right along. In my experience, the most aggressive, zealous

1 inspectors have been the security regional inspectors. They
2 pass out citations like traffic cops pass out parking
3 tickets.
4 So I don't quite understand that you are going to
5 get an improvement by a rule that is going to provide
6 oversight above effective remedial action.
7 I wish I had known those guys didn't have any
8 power. I would have never paid any attention to all the
9 citations they were giving me out there.
10 MR. MC CORKLE: Right now there are not many
11 citations being given out in the area of access
12 authorization because there is no standardized program and
13 there is no rule requirement.
14 As I indicated early on, the plans are in many
15 cases silent on many aspects of this program. We do not
16 have a program.
17 DR. KERR: Mr. Reed's program must have been in
18 very bad shape to have all those citations.
19 (Laughter.)
20 MR. WARD: I didn't know which plant it was that
21 didn't have a program.
22 (Laughter.)
23 MR. REED: But the security inspectors focus
24 from ignition keys being left in vehicles inside the
25 protected area to access authorization and proceed with the

same zeal.

Quite frankly, I think it has been a very effective program out there already, and I think it is borne out by the fact that inside security problems have not been nearly as large as the other areas.

MR. MC CORKLE: I think that the problem we are faced with here, of course, is to come up with a program that provides the Commission with the increased assurance that they have directed the staff to provide them. We feel that is one of the more important programs in the entire safeguards area.

MR. REED: I applaud them.

MR. MC CORKLE: And we feel when it comes out that it needs good oversight and prompt effective action. That is something I agree with.

MR. REED: I applaud the clarification on the betterment of policy, but I don't see that making a rule will change anything with respect to the zeal of implementation.

MR. MC CORKLE: If there is not a rule, then they cannot inspect against the requirements. These requirements are new.

MR. REED: You mean to say that all of these things they have been doing with respect to policy and ANSI and A&S have been out of order?

MR. MC CORKLE: The things licensees have admitted to in the plants have been on a voluntary basis. Some of the plans are so loosely ordered that there is in effect no inspection. There is no rule requiring any programs.

MR. REED: I am trying to be constructive here. A policy statement would do the same thing, and the NRC security forces would just perhaps be more clear in what they wanted to focus on, access authorization versus keys in ignition, things like that.

MR. MC CORKLE: Perhaps Mr. Bush would like to comment. He is from the Inspection and Enforcement Office.

MR. BUSH: The fact is that we enforce what the licensees have committed to in their security plans, and if there are no commitments, then there is nothing to enforce.

DR. REMICK: One question before you leave. I can never understand why fitness for duty wasn't the heart of this. The best I understood is that there is more than one staff office, that one has the responsibility for fitness for duty and the other has responsibility for the insider safeguards.

But that being the fact, the fact that the Commission decided to defer on the fitness for duty industry initiative, I have to disagree with your bullet which says that this new rule provides consistency with other required

1 saeguards programs.

2 I have to argue that there is a precedent for

3 allowing industry here to be consistent.

4 MR. MC CORKLE: Although there may be some

5 overlap, I am not too certain that fitness for duty is per

6 se a safeguards requirement.

7 DR. REMICK: It goes to trustworthiness, I

8 believe.

9 MR. MC CORKLE: I agree there could be some

10 overlap.

11 As I indicated, one of the problems from the

12 staff's viewpoint is that the exercise of surveillance over

13 fitness for duty programs, even though their policy

14 statement has not been issued yet, a commitment has been

15 made to oversee that. They have had problems having

16 enforcement and oversight on it, and that is a relatively

17 simple program.

18 In the absence of a positive oversight on that,

19 it begs the question. I mean, could they then exercise

20 effective oversight over a more complicated program?

21 DR. REMICK: I guess it depends on what you mean

22 by exercise of oversight.

23 MR. MC CORKLE: We feel that exercising oversight

24 means to ensure compliance and in the absence of compli nce

25 effective enforcement. Remedial actions will be taken.

DR. REMICK: What is the basis of the difference in the NRC staff on something that I&E could come in and check this and basically enforce fines if they don't comply with it?

MR. MC CORKLE: I have indicated early on the potential existence of satisfactory surveillance over this program using either method. I am merely stating the staff preference based on our experience.

But another thing I neglected to mention, somehow or other policy statements have a tendency to wither up and go away; whereas, regulations don't. They don't have the permanent stature of regulations. They kind of get lost in the shuffle.

DR. REMICK: The important thing is are they effective?

MR. MC CORKLE: That is exactly right, and in the staff's view, the more effective way to go is the rule. I would certainly agree that these things are very subjective.

MR. WARD: I think we had better get on to due process.

Mr. Fonner, if you can volunteer to take less than your 20 minutes?

MR. FONNER: Yes, I will in the interest of time. In the interest of time, I will be fairly quick

1 here.

2 Again, my name is Robert Fonner, Deputy Director

3 of the Regulations Division in the Office of Inspections.

4 I have been invited here to address specifically

5 one item. My remarks will cover three areas: why there is

6 an appeal procedure in the rule; what it is in the rule;

7 that is, how it will operate as we see it; and, thirdly, its

8 relationship to the so-called NUMARC proposal.

9 To go back to the beginning, why is there an

10 appeal procedure?

11 There are two main reasons why there is such a

12 procedure in the rules.

13 First, the Commission requested in its adoption

14 of the Hearing Board recommendations in 1980 it adopted one

15 of those recommendations, which was an appeal procedure, and

16 it included that in its order that it issued in 1980 to the

17 staff.

18 The staff proceeded to prepare a rule which at

19 all times had an appeal procedure. The form of the

20 procedure has been modified over the years to what you saw

21 in the proposal and the final rule package.

22 Secondly, and I think more importantly, because

23 of the comments and because of our own prior concerns, we

24 did an extensive bit of research into the case law that

25 would seem to be applicable when you have a regulation that

1 requires certain forms of actions by a private party which
2 have a high potential for intrusion into rights of privacy
3 and potentially could infringe upon First Amendment rights.
4 This is, as you recognize, a very sensitive area
5 in Constitutional law in this country today. There have
6 been at least two Supreme Court decisions that have dealt
7 with this question, numerous lower court decisions.
8 The court is divided on the question. There is
9 no uniformity in the Supreme Court at all.
10 Our reading of those cases -- and I will be the
11 first to admit that other counsel serving other clients
12 might come to different conclusions -- but our conclusion is
13 that in the context of the access authorization rule with
14 its requirements placed upon the licensee, its criteria, its
15 formulation of standards that the licensee must apply if he
16 is to operate under the rule bring it within that class of
17 actions which the Supreme Court, in our opinion, has
18 indicated should be accompanied by a procedure which gives a
19 person adversely affected a right of review of the adverse
20 employment action.
21 As I say, other counsel may take different
22 views. I am not going to go into an elaboration of the
23 legal aspects of it unless you are interested in that,
24 simply to say that we have elaborated this in great detail
25 in the package before you in Appendix A, and if you want to

1 spend more time and you have more patience, to look at that
2 description of our activities.
3 DR. MARK: Question there.
4 I am in favor, of course, of a person who is
5 being penalized by some decision having an appeal, but the
6 requirement for an appeals procedure results only if you
7 have a rule and would not be required legally of a private
8 employer.
9 MR. FONNER: That is correct in this particular
10 context.
11 DR. MARK: Because a federal agency dictates the
12 requirement, then there must be an appeal procedure?
13 MR. FONNER: That is correct. It is related to
14 the closeness of the government to the private action which
15 the rule requires, and that is a flexible idea. You can go
16 from one extreme to another extreme, and it is going to be a
17 question of judgment where on that spectrum your particular
18 situation is.
19 Our conclusion is that on that spectrum we fall
20 on that side of the line that says have an appeal
21 procedure.
22 DR. MARK: If one were following the industry
23 proposal, the appeal procedure, while desirable, fair and
24 recommendable, would not be required by the Supreme Court;
25 whereas, if you do it, it would?

MR. FONNER: That is our view, but I want to caveat that by an observation that the way in which the industry proposal is implemented may bear upon and impact that conclusion.

I will get to that in a moment. I want to briefly say just a few words about the procedure itself as in the rule.

First of all, we try to make it as simple as possible.

Secondly, it is not prescriptive. We think the door is wide open to the licensees and their counsel to frame a procedure which can meet the requirements of the rule and get to the greatest degree of flexibility.

We think that is specifically in response to comments which we received even before the proposal was published.

Thirdly, we have opened the door to a utility to use a grievance procedure that it might have in a collective bargaining agreement, a procedure which they would already be familiar with in a labor relations context.

We have said if you are satisfied with that you may adopt that as your procedure for the purpose of this rule.

There were comments which said that many plants have such union agreements, and since they do have a

1 grievance procedure why do we need the appeal procedure at
2 all, since that remedy is already available?
3 We are not certain in our minds that the
4 collective bargaining agreements would automatically include
5 an employment action based upon the rule as a grievance
6 under the collective bargaining agreement, so that we felt
7 that we couldn't remove the appeal procedure for those
8 plants simply because they had that. We still felt it was
9 necessary to apply in that circumstance.
10 With respect to the NUMARC proposal -- and I am
11 getting back to the point here, and I am doing that very,
12 very quickly -- first, would you show that slide?
13 (Slide.)
14 As I understand the NUMARC proposal, in the first
15 proposal which we received on which we had information, this
16 question mark was not there. It would have said something
17 like oversight by NUMARC, INPO, or some other industry
18 committee.
19 We were specifically asked by the staff what
20 would your position be with respect to an appeal proposal if
21 that were the situation. We said under that circumstance we
22 saw no need for an appeal provision if the enforcement
23 situation was like that.
24 The second proposal which we understood -- and I
25 was not present at those meetings, so I am speaking really

1 from hearsay -- would have put this in here with NRC.

2 We said, well, if you are going to go to that

3 type of inspection and enforcement where the proposal would

4 be to incorporate the NUMARC guidelines into the security

5 plan and the security plan is by license condition a fully

6 inspectable and fully enforceable commitment of the

7 licensee, then we are back again over that line of the

8 relationship between the government and the private party,

9 the private party doing a private program with the full

10 force of the United States behind it in terms of inspection

11 and enforcement.

12 Under those circumstances, we felt that an appeal

13 procedure was the better advised course of action.

14 That, in a nutshell, is my presentation.

15 MR. REED: I don't see why you have a question

16 mark there.

17 MR. FONNER: That is Mr. McCorkle's slide, not

18 mine.

19 MR. REED: When I see guidelines, I don't think

20 of NUMARC guidelines. I think of the fact that you create a

21 policy statement, and you are going to produce guides,

22 supporting guides, isn't that correct?

23 MR. FONNER: The gentlemen over there are shaking

24 their heads "no."

25 MR. REED: Well, if we go to the policy

1 statement, it would have all the aspects of the rule.

2 MR. FONNER: Let me refer to something else. I

3 have seen a draft of a policy statement dealing with the

4 fitness for duty rule, and while it has some aspects that

5 the NRC staff will review and evaluate industry performance,

6 there is no inspection and enforcement in the traditional

7 sense that those words are understood at the NRC.

8 MR. REED: I don't see why it doesn't work out

9 the way it does now. You are saying like a volunteer

10 program up there now, and you are out there enforcing it and

11 citing people.

12 MR. FONNER: The volunteer program, if you go

13 back into the history of this, came about in 1977 and 1978

14 when the Commission, in ruling upon 7355, this concurrent

15 core safeguards rule, stated that there was an open

16 question. That open question was access authorization.

17 However, th , felt there were still going to be

18 adequate protection of the plants with 7355, on the

19 understanding that the industry was already at that time,

20 many of them, using ANSI 1817, and they felt that as an

21 interim measure that was acceptable.

22 At that same time the Commission was proceeding

23 with a rulemaking which would amend Part 11 of our rules,

24 which would have a program for clearance of people for

25 unescorted access in nuclear power reactors based upon

1 10 CFR, Part 10, which is the same, exact kind of clearance
2 that you see for your Q clearance.
3 That they referred to a hearing board. The
4 hearing board advised against a program based upon Part 10,
5 and the Commission adopted the hearing board's
6 recommendation.
7 So when you look at it in the historical context
8 with reference to the ANSI standard, it was at that time
9 viewed as an interim measure that would not be long in
10 effect because it was an ongoing proceeding which would
11 handle the access authorization, and I think all of us fully
12 anticipated by 1979 we would have an access authorization
13 ruling.
14 So we didn't feel it was essential or imperative
15 to get into some of these other provisos.
16 Loren Bush has something to add.
17 MR. WARD: I think we had better hear Mr. Bush's
18 comment and then go to the next speaker.
19 MR. BUSH: I just wanted to make a comment of the
20 oversight on the fitness for duty.
21 The staff does plan oversight activities in two
22 areas. One is to review reports, documents, and things of
23 that nature provided to the staff through INPO and through
24 the event reports, and so forth.
25 The other is a number of inspections. Currently,

we are figuring at least somewhere between six and eight per year, and we are figuring probably eight man-days onsite.

I might emphasize that is a considerable quantum greater than what INPO is currently doing. That is the level of effort we feel is appropriate for our oversight.

DR. REMICK: Mr. Chairman, could you allow one more question?

I think to help you understand, it seems like there is an inconsistency in the staff position on the appeal process, and I am not against the concept of an appeal process but you have a program now where people commit, and if they commit and you are inspecting against that commitment and you don't insist upon an appeal process, I think what you are saying is if you went to the industry initiative and somebody provided guidelines and people who didn't meet these guidelines, why do you feel there should be an appeal process?

MR. FONNER: I can respond to that on two different levels. I am speaking in large part now from memory of ANSI 1817 and the current set of industry guidelines, which are attached in the final attachment in this package.

There is quite a world of difference between those two in what they would require under NRC enforcement and inspection. We haven't analyzed the situation with

DAVbur

1 regard to 1817, frankly because we view that as in the
2 federal program, always have. I don't know where we would
3 come out and where it would fall under this spectrum that I
4 referred to.
5
6
7
8
9
10
11
12
13
14
15
16
17
18
19
20
21
22
23
24
25

DR. REMICK: You did say under guidelines there.

MR. FONNER: Under the guidelines that have been presented, attached to the comment letter from, I believe, PEPCO, which is the only thing we really have on this issue.

DR. REMICK: Yo don't see that inconsistency in the current position?

MR. FONNER: As I say, we have not yet evaluated where we would come out on an appeal procedure vis-a-vis ANSI 1817. We feel it's an exercise which is not needed because it's going to be replaced either by this or by the rule -- either by the guidelines or by the rule.

DR. REMICK: Your reference to the ANSI standard, I don't quite understand in the context of my question. Is that the guideline?

MR. FONNER: No. The ANSI standard is what the licensees may have committed to back in 1977, that might currently be in their license.

DR. REMICK: I see. Thank you.

MR. WARD: Bill, a real short one.

DR. KERR: This is the end of the NRC's presentation?

MR. WARD: Yes, it is.

DR. KERR: How much reduction in insider sabotage do you expect this rule will achieve?

MR. BURNETT: I don't know that that can ever be quantified. But I can tell you about some instances that have happened.

DR. KERR: I'm more interested in the change that will occur. Do you expect a reduction to zero?

MR. BURNETT: Again, let me just see if I can give you some data. We have had people that have impersonated other people. They weren't the identity that they claimed to be. They were in the process of becoming a guard at the site, and were in the process of being issued a gun.

It was found out that they were wanted for felony in another state. This rule, of course, will make that type of data available.

DR. KERR: Do you consider that an act of sabotage?

MR. BURNETT: No. It's a potential. The problems this rule will address is that it will make that data available.

DR. KERR: I don't see that that has anything to do with insider sabotage.

MR. BURNETT: We've never had an act of insider sabotage. We've stated that publicly.

DR. KERR: So you continue to have none. And you will conclude that the rule must be successful because of...

DAV/bc

1 and if you have some, will you conclude that the rule is
2 unsuccessful?
3 MR. BURNETT: If we have some and if we can find
4 out what went wrong, I think we would have to modify the
5 rule, like any other analysis on any process, be it security
6 or safety.
7 DR. KERR: If you haven't had any when you didn't
8 have a rule and you now have a rule and you have some, it
9 might lead you to conclude that the rule caused it.
10 MR. WARD: Okay. I think our next speaker has
11 asked if he could give the first part of his presentation
12 before we take a break. I hope it's short. The first part.
13 DR. SHEWMON: Do you mean he's going to give half
14 his presentation?
15 MR. WARD: No. He's just going to give a very
16 few minutes, we hope.
17 MR. KENYON: Good morning. I've been asked to
18 make two presentations, the first being an overview of
19 NUMARC. My intention will be to make that presentation;
20 then we would go to the break.
21 My name is Bruce Kenyon, Senior Vice President,
22 Nuclear, for the Pennsylvania Power and Light Company.
23 (Slide.)
24 I'm senior vice president of Nuclear for the
25 Pennsylvania Power and Light Company. As such, I'm

1 responsible for the operation, maintenance and support of
2 our two Susquehanna nuclear units that were brought into
3 commercial operation in June of 1983 and February 1985.
4 As an additional comment on my background, I'm a
5 former nuclear plant superintendant. I have previously
6 licensed as a senior operator on both a boiling water
7 reactor and a pressurized water reactor, as well as
8 operationally-qualified on three Navy nuclear plants at a
9 senior level; and in varying management capacities, I have
10 started up and operated four commercial plants
11 I appreciate the opportunity to meet with you and
12 briefly discuss the Nuclear Utility and Management Resources
13 Committee, commonly known as NUMARC.
14 NUMARC represents a very significant milestone
15 for the nuclear industry, that all 55 nuclear utilities have
16 committed to work through NUMARC for the purpose of
17 collectively managing our nuclear-related activities.
18 (Slide.)
19 During the course of this presentation, I'd like
20 to review with you the events that led to the formation of
21 NUMARC and major activities since its formation. I also
22 want to discuss some founding principles which are really
23 essential to the understanding of this organization.
24 I'll mention to you briefly how NUMARC is
25 organized and how it functions, and also discuss some

1 initiatives undertaken and what's been accomplished.

2 Two particular initiatives, I'll review in a

3 little more detail. The first concerns technical issues.

4 This is in recognition of the fact that NUMARC was

5 originally established to address management and people-

6 related issues.

7 So I also want to address the recent formation of

8 the Technical subcommittee. I also will address efforts

9 towards Congressional education.

10 As a very important topic, I want to mention

11 those attributes of NUMARC that really set this organization

12 apart from other industry organizations.

13 And, finally, I'd like to review the overall

14 results achieved.

15 (Slide.)

16 This slide shows significant events from this

17 perspective that took place in 1983 and early 1984. This

18 slide points to events which represent a considerable shift

19 in regulatory emphasis. By that, I mean from a

20 concentration on design approval from plants under

21 construction to a much greater emphasis on operating plant

22 considerations.

23 Early in 1983, the NRC approved a human factors

24 program plan. This addressed the areas of staffing

25 qualification, training procedures, man-machine interface,

DAV/bc

1 management, organization, and so on. That summer, the NRC
2 approved the concept of pursuing a general operating
3 criteria for roughly 12 operational areas.
4 Then, in the fall of 1983, the NRC presented its
5 proposed regulations on training and qualifications. This
6 was prepared in response to Section 306 of the Nuclear Waste
7 Policy Act.
8 The regulations, the associated prescriptive
9 guidance and the analysis comprised over 300 pages, and this
10 represented just one of the proposed general operating
11 criteria areas.
12 This proposed training and qualification
13 regulation included most of what the industry through INPO
14 was endeavoring to accomplish.
15 In January of 1984, the NRC issued a policy and
16 planning guidance for the current calendar year. This
17 guidance instructed the staff to continue its efforts in the
18 Human Factors Program Plan, to pursue the development of
19 alternative regulatory approaches with respect to
20 maintenance activities, to investigate the need for and
21 benefits of the general operating criteria, and to pursue
22 additional requirements for assuring the inadequate level of
23 experience and competence in licensing management.
24 (Slide.)
25 So through 1983 and into 1984, there was a strong

DAV/bc

1 trend towards substantially increasing regulation and
2 management operational areas. This potential posed
3 considerable impact on plant operations. Thus, it was cause
4 for concern for several reasons.
5 The first is that it represented the potential of
6 a substantial encroachment into historical management
7 prerogatives of utilities.
8 Second, it represented potential regulations
9 developed by those having little, if any, operating power
10 plant experience.
11 Third, it had the high likelihood of undermining
12 INPO and utility efforts to pursue excellence.
13 These concerns were expressed to the
14 Commissioners by utility leaders at a meeting in early
15 1984. Also at that meeting was Dennis Wilkinson, then
16 president of INPO, and he made a strong request that the NRC
17 delay and rethink the proposed training rule. He summed up
18 the industry's concern on the trend toward prescriptive
19 regulations in these areas as follows, and I'm now quoting:
20 "If this occurs, the management attention to
21 technical competence and resources of the industry will be
22 diverted from improving the safety of operations and
23 directed toward meeting additional requirements. A
24 continuing paper chase." End quote.
25 The utilities have acknowledged both strengths

1 and weaknesses within these various management areas.
2 They've also acknowledged that there is considerable
3 variation among utilities and, thus, we do recognize there
4 are problems to be solved.
5 However, we strongly believe that the best
6 approach in these areas is for utilities to take the
7 initiative and use our expertise to identify and resolve
8 these problems.
9 In further discussions, the Commission expressed
10 a willingness to consider alternative regulatory concepts
11 and a receptiveness to recognize the contributions of
12 industry self-initiated programs.
13 Consequently, industry leaders determined a new
14 approach was needed to address these emerging issues. An
15 initial step was taken in February 1984, when several
16 utility executives met with NRC Commissioners and staff and
17 presented an industry proposal which had to do with how to
18 formulate experience requirements for NTOL's.
19 At the same time, these executives asked that the
20 NRC delay rulemaking in several areas to allow time for the
21 industry to make a comprehensive, integrated review of
22 management and people-related issues, and then to respond to
23 the NRC with proposals.
24 To be effective, industry leaders recognized that
25 nuclear utilities needed to be more cohesively organized.

DAV/bc

Thus, in early March, a group of senior utility executives met to develop a plan for an organization to deal with these issues. This organization eventually came to be known as NUMARC.

(Slide.)

The NUMARC effort was founded on three fundamental principles. The first is that the nuclear power industry must pursue excellence in all of its activities to ensure the highest level of plant safety and reliability.

The second principle is that, in its pursuit of excellence, the nuclear utility industry must have the flexibility to manage its resources to achieve the best possible results.

We believe that overall detail to prescriptive regulations detract from excellence in that the regulations drive you toward minimums.

We believe that the utility industry is best-qualified in management areas to identify existing problems, best qualified to determine appropriate solutions and best equipped to implement the corrective actions.

(Slide.)

To implement these principles it was necessary to obtain broad-based, high level industry support. All 55 nuclear utilities have committed to NUMARC. Each nuclear utility has designated a senior executive with line

DAV/bc

1 management responsibility for nuclear matters. This is
2 typically at the vice president's level or higher, to form
3 the NUMARC executive group.
4 This is the group that approves NUMARC
5 commitments. A subset of the executive group is a steering
6 committee. This meets more frequently. Overseas policy and
7 strategy. Identifies and prioritizes issues and reviews
8 proposed NUMARC positions.
9 The slide shows a technical committee that was
10 not formed until August of 1985. This has been delegated to
11 work on technical issues. I'll talk about it a little later
12 in the presentation. The backbone of NUMARC is the working
13 groups. These have been formed to address specific issues.
14 Each working group is typically headed by a vice president.
15 The working group recommends commitments to deal with
16 issues, and these commitments are made and forwarded to the
17 executive group through the steering committee for
18 approval.
19 Later, I will be addressing you as chairman of
20 the NUMARC working group on security. The role of NUMARC
21 has been recognized and supported by the various nuclear
22 industry organizations. In particular, INPO provides staff
23 support; AIF, ANEC, EEI and EPRI have also supplied
24 significant assistance and all are represented at steering
25 committee meetings.

DAV/bc

(Slide.)

NUMARC has been in existence for about two years and there have been substantial accomplishments. There have been numerous meetings with NRC Commissioners and senior staff personnel.

In these meetings it's been emphasized that the nation's nuclear utilities are taking the initiative in key areas related to plant operations, that we are setting goals and that we are monitoring and evaluating performance.

The Commission has been urged to support our initiatives and to refrain from publishing regulations which would undermine these efforts.

We've also asked for time to allow NUMARC to demonstrate results. In October 1984, the Commissioners, in meeting with senior NRC staff, agreed to hold off on regulations in the training, fitness for duty and senior manager on shift areas and to allow NUMARC approximately two years to get programs in place to deal with various issues, and to follow through on commitments.

We view the Commissioners' decision as a very important and bold step. It's a turning point in the industry's crucial efforts to achieve a proper balance between regulation and preserving management's initiative and flexibility, which we believe is essential to the achievement of excellence in the operation of our power

DAV/bc

1 plants.

2 Another important commitment was that each

3 nuclear utility would exercise its best efforts to have all

4 designated training programs ready for accreditation by the

5 end of this year.

6 In response to the NUMARC request, INPO has

7 agreed to enhance its corporate assistance visits by

8 converting them to corporate evaluations with follow-through

9 and recommendations.

10 Also, each utility will contribute to

11 strengthening the INPO corporate and plan evaluations by

12 providing senior managers and SRO's to augment the

13 evaluation teams.

14 The utilities have reviewed training programs on

15 shift operating personnel to upgrade diagnostic abilities.

16 We've placed greater emphasis on increasing the nuclear

17 expertise of managers in key nuclear positions.

18 We are endeavoring to share existing qualified

19 personnel with utilities having less experience to help them

20 get started.

21 We are pursuing efforts to increase management

22 effectiveness. This includes efforts by each utility to

23 develop goals that reflect the commitment to excellence, and

24 the use of performance indicators to monitor progress.

25 Each utility also agreed to develop fitness for

1 duty programs by January 1985 and, of course, we're still
2 waiting for the Commissioners to issue a policy statement
3 endorsing this action.
4 And we have confirmed the industry's commitment
5 to reduce the number of unplanned automatic trips.
6 (Slide.)
7 Due to the success of initial activities in these
8 management-related areas, NUMARC agreed on an interim basis
9 to apply the NUMARC process to selected technical issues;
10 so, in August 1985, the technical issues subcommittee was
11 formed. The initial issues being undertaken are station
12 blackout, which is the issue we have furthest along and
13 we're actively working with the NRC in that regard; decay
14 heat removal, which is an effort that's just getting
15 started; and safety goals, and really a subset of that
16 issue, which is of particular importance, is the averted
17 cost issue. We have a draft position paper on that.
18 So, utilities are aggressively endeavoring to
19 address significant issues affecting plant operation.
20 (Slide.)
21 Another significant initiative is our efforts to
22 communicate with Congress this Congressional interaction we
23 view as an educational process. It's our intention to
24 review what has been accomplished, what is being worked on.
25 We present information. This is not a lobbying effort. We

DAV/bc

do have a fulltime project manager in Washington to facilitate this activity.

The objectives of the program are to foster improved Congressional confidence in nuclear power, to develop support for self-management, and to recognize and support industry initiatives for self-improvement.

We asked that NUMARC executive group members to the maximum extent practical participate in face to face discussion with their Congressional representatives.

(Slide.)

It's important to understand the unique features of NUMARC. The first is that it represents the personal involvement of the senior utility individual with line management responsibility for nuclear plants. As I said earlier, it's typically at the vice president or above. They, in many cases, include presidents to address these very important issues.

Second, a very important capability is a unique capability to obtain a solid utility commitment. All 55 nuclear utilities are members of NUMARC. An affirmative vote by at least 80 percent of the utilities means the action being taken is a commitment for all utilities. And they will live by it.

Third is that NUMARC has regularly met with the Commissioners and senior NRC personnel to discuss issues,

DAV/bc

provide information and obviously to advocate positions. Thus, NUMARC has provided a means to coalesce the utility nuclear industry into a much higher degree of action; unlike previous organizations.

MR. REED: I'd like just to make a comment. In your opening remarks, you mentioned your qualifications. I'm not so sure that you destroyed your credibility or enhanced it by talking about the fact you'd been an SRO, and so on and so forth, and a plant superintendant and now vice president.

I have been bothered a bit by the NUMARC organization being principally officers of companies. And I worry over the years -- not many years, since I haven't been here that long -- but I'm worried that they might be de-coupled from the workplace.

Now you are here as an example of the coupled person who is walking the trenches in the workplace, and you're now representing NUMARC. I'm pleased with that, although I take a lot of flack here, as I consider myself an operator. I take a lot of flack.

(Laughter.)

DAVbur

1 MR. REED: Could you state whether or not the
2 other 53 people who make up NUMARC are well-coupled to the
3 workplace, or are they MBA fast tracks?
4 (Laughter.)
5 MR. KENYON: It is not an either/or, Glenn. I
6 understand the concern, and it is a concern that was more
7 and more valid.
8 As I view the industry today, there are more and
9 more people at the officer level with backgrounds like
10 myself. Certainly not all 55 representatives are former
11 operators, but the percentage is increasing, and I find that
12 more and more of these senior executives do have a good
13 understanding of plant concerns.
14 That is not unanimous at this point in time, but
15 I think the individuals who have the operating background
16 are more and more carrying the day in terms of what
17 positions are taken.
18 MR. REED: What you are saying -- and I am
19 pleased to hear that -- is that finally those people who
20 have served in the trenches are rising up. I am glad to
21 hear that.
22 DR. SHEWMON: I was more interested in something
23 you went over, and I would like you to have to say it
24 again.
25 As a preamble, my concern is not with what I will

1 call the top quartile of the class who often are sent in
2 here to give presentations but the bottom quartile of the
3 class, who I think the regulations are usually built to
4 force to do things.
5 If I understood you correctly, you said that
6 NUMARC and all the utilities have agreed that if 80 percent
7 voted on something all would accept it, is that correct?
8 MR. KENYON: That is right.
9 DR. SHEWMON: If we, for example, agreed on a
10 screening criterion for the employment of people, this
11 wouldn't have to be accepted by all.
12 How is it checked out whether or not this is
13 agreed to any more than the guy who happened to be at the
14 meeting?
15 MR. KENYON: First of all, it has already been
16 accepted as a NUMARC amendment. Therefore, it is a
17 commitment for all utilities with respect to how it is
18 enforced.
19 I would prefer to address that question when I
20 get into the access authorization.
21 Yes?
22 DR. CARBON: Does NUMARC include public agencies
23 like TVA?
24 MR. KENYON: It includes -- yes, it does.
25 DR. CARBON: All power plant operators?

MR. KENYON: All nuclear power plants are represented through their organizations to NUMARC, yes.

MR. MICHELSON: This so-called NUMARC commitment, is it a document that I can sit down and read? Does it define what the program is?

I don't recollect seeing it.

MR. KENYON: There is a NUMARC charter that describes it, its organization.

MR. MICHELSON: No, the safeguard specifically.

MR. KENYON: Access authorization?

MR. MICHELSON: Yes. Is there a document I can read that describes this NUMARC commitment?

MR. KENYON: The guideline is part of the SECY package. The fact that the utilities have committed to incorporate the guideline elements, to meet or exceed the guideline elements in their security plan is a commitment that was made by NUMARC Utilities on January 30th.

That commitment has been communicated to Stello by a letter from the Chairman of NUMARC.

MR. MICHELSON: But there must be much more than those basic guidelines in the program in addition already.

Are they described somewhere that one can read about it?

MR. WARD: We are going to hear more about the security program.

MR. MICHELSON: So the speaker at that time can answer my question.

MR. WARD: This is giving us a general introduction to NUMARC, which we probably ought to wrap up.

MR. EBERSOLE: One question. I at least see NUMARC as another potential avenue of integration of utilities, but it is not as well organized as the original American Indians.

I want to say this in the context of the loss of what we will call the nuclear option. I don't see any plants I can identify in which the nuclear units, with their penchant for individualized designs and so forth, have not really contributed at all towards standardization of the product of what we can say will be the nuclear work force.

Is there anything in the scope of NUMARC that will cope with this sort of problem?

MR. KENYON: NUMARC was created as an interim organization to recognize a set of problems in existence and without a commitment that this would be a permanent approach.

There is a study going on now which looks at the results achieved by NUMARC, the various activities of all the other nuclear-related organizations, and the purpose of this study is to answer the question: how might this whole process be organized in a better way?

DAVbur

So NUMARC, I don't believe -- this is a personal opinion, obviously -- I don't believe NUMARC as it is presently structured is the permanent answer to the issue you are raising. I think it is a very good step in the right direction, with other steps to be taken.

MR. WARD: Does that wind up your introduction?

MR. KENYON: There are some statistics on this slide.

MR. WARD: I think we can read those.

MR. KENYON: I will skip over that, and let me just go to a final slide.

(Slide.)

As a result of NUMARC, I think there is a much greater utility awareness of management issues and the impact of NRC actions on plant operations. We have established communication lines among -- collectively among utility managers and with the NRC, and we are aggresssively dealing with key issues related to safety reliability.

I really view this as just a very introductory presentation to the ACRS regarding NUMARC. NUMARC would be happy to periodically give you updates on the progress as you desire.

Your recognition and support of these initiatives would be appreciated.

MR. WARD: Thank you very much.

1 Let's take a break until 11:30.

2 (Recess.)

3 MR. WARD: We will reconvene.

4 I would like to call the committee's attention to
5 the fact that we have got a rather tight schedule this
6 afternoon. So I think we will have to plan on returning
7 from lunch at 1:00 o'clock. So I guess that means we are
8 flexible as to when we leave for lunch, but we will return
9 at 1:00.

10 Before we go back to Mr. Kenyon, Bob Burnett has
11 a brief statement he would like to make for the record.

12 MR. BURNETT: I want to make sure that the staff
13 and the ACRS are communicating when I answered Mr. Kerr's
14 question associated with sabotage.

15 This word "sabotage" is very difficult to
16 understand. There are various opinions in different
17 quarters.

18 The staff has taken the position that we do not
19 have a case of radiological sabotage. That is sabotage that
20 would violate the Part 100 standards at the boundary of the
21 facility.

22 I know that seems -- I don't know why I am doing
23 this, but there are strong positions in various places and a
24 lot of debate on what acts of sabotage are. So we have had
25 incidences of vandalism and damage, but we have had no acts

DAVbur

of radiological sabotage.

MR. WARD: Thank you, Mr. Burnett.

Mr. Kenyon, go ahead.

MR. KENYON: I would now like to address the subject of access authorization.

(Slide.)

I am doing so in the capacity of Chairman of the NUMARC Working Group on Security. There are two other industry attendees supporting this presentation.

First is Chuck Sprunk, who is Pennsylvania Power & Light's Director of Corporate Security, who has provided considerable staff support to this working group. He has been in the security profession for 21 years, which involves both military and nuclear power plant security experience. I may call on him to address some more detailed questions.

Also, I have in attendance Jay Silber, of the law firm of Shaw, Pittman, Potts & Trowbridge, who has done considerable licensing support work for nuclear utilities. In particular, he has done considerable analysis for the KMC Physical Security Coordinating Group on the need for a specified appeal process.

(Slide.)

Through NUMARC, all utilities have agreed to implement the access authorization guideline if it is endorsed by the Commissioners in lieu of the proposed rule.

DAVbur

AIF has endorsed the guideline. EEI endorses the guideline. In particular, the EEI Nuclear Security Subcommittee, in a meeting in August 1985, unanimously endorsed the guideline. KMC's Physical Security Coordinating Group endorses the guideline.

Th s, there is solid nuclear industry support for the guideline.

By contrast, the NRC acknowledges the guideline as an acceptable alternative but prefers the rule for certain reasons that have been discussed. I will comment on that later.

(Slide.)

The fundamental purpose of this presentation is to provide you with some information and hopefully convince you that considering both the needs for an effective access authorization program and the need to balance the benefits of potential program requirements against the practicalities and impacts of implementation. I hope to show you that in balancing these somewhat competing objectives, the NUMARC program is the superior choice.

Reviewing the agenda, I will give you some background as to how the guideline was developed. It is important to understand how and when the guideline was developed because much of the rationale as to why the guideline is a better document has to do with how it was

1 developed.

2 With respect to guideline elements, I will spend

3 very little time discussing the similarities between the

4 guideline and the rule. Thus, much of the presentation will

5 deal with the differences and why these differences exist.

6 I must say that I am constrained to make these

7 comparisons to the rule versus the guideline based on the

8 rule as it was published for comment in August 1984. I have

9 not seen the finalized rule. But based on the presentations

10 that have been made, I believe most of what the industry is

11 concerned about is still in the rule.

12 Two significant issues have been previously

13 identified.

14 The first is a need for a viable means to ensure

15 compliance.

16 I have to correct something that Mr. McCorkle

17 stated, and that is that NUMARC has not argued for industry

18 oversight. NUMARC has never done that. There was an

19 internal NUMARC position, which was not approved, that

20 talked about industry oversight. But that was disapproved.

21 Thus, the issue of INPO providing oversight to

22 the guideline for a two-year trial period, as was stated, is

23 just not correct.

24 We believe this question of enforcement has been

25 solved, and I believe the NRC agrees with that, although it

1 wasn't real clear from what was stated. I will describe the
2 resolution shortly.
3 The second significant issue concerns whether or
4 not a specified appeal procedure with due process
5 considerations is required.
6 In our opinion, it is not only not required, it
7 is disadvantageous, and I will discuss the reasons for that
8 shortly.
9 Then in summarizing, I will recap the benefits of
10 the guideline.
11 (Slide.)
12 Discussing the background, I am going to be
13 discussing the activities of two NUMARC working groups.
14 There was one on access authorization, and I was not a
15 member of that group. There was one on security in general,
16 which I chaired, and that group succeeded the access
17 authorization group.
18 The NUMARC Working Group on Access Authorization
19 was formed in January 1985. It was a somewhat belated
20 undertaking inasmuch as the access authorization issue was
21 not clearly within the scope of issues envisioned by those
22 who formed NUMARC.
23 However, based on the impact of the proposed
24 rule, which we viewed as substantial, we agreed to undertake
25 an effort at a time when it was very well into the comment

1 period.

2 That working group had 14 utilities

3 participating. A very early decision of that group was that

4 it would be very difficult to successfully address the

5 numerous problems with the rule through comments. Thus,

6 that group viewed the best approach would be, one, to

7 develop a guideline as an alternative.

8 Now, an obvious issue at that time was how to

9 enforce the guideline, and that working group proposed that

10 the utility industry enforce the guideline through INPO or

11 perhaps NUMARC. That proposal was presented, but neither

12 NUMARC nor INPO believed it was appropriate for it to

13 undertake an enforcement responsibility.

14 Consequently, that guideline was not adopted by

15 NUMARC. Therefore, it was not submitted by NUMARC during

16 the rule comment period.

17 A few utilities and EEI used the unapproved

18 guideline as the basis for their comments on the proposed

19 rule. That is why the industry's comments at the conclusion

20 of the comment period do not really recognize and strongly

21 support the guideline, because that guideline had not been

22 adopted by NUMARC at that time.

23 That left NUMARC in a position of arguing against

24 the rule without an alternative proposal. Based on

25 subsequent meetings between NRC senior management and

DAVbur

1 NUMARC leadership, again recognizing the significance of the
2 issues involved, NUMARC agreed to try again, and in April
3 1985 a new working group was formed. It was broadly
4 chartered to deal with the entire subject of security, and
5 it promptly met with the NRC five times over the next two
6 months.
7 Now, it is important to understand the nature of
8 these meetings. We asked the NRC why certain proposed
9 access authorization provisions were necessary, and we got a
10 range of answers. They ranged from security provisions to
11 legal requirements to other concerns.
12 In contrast, the NRC asked us what are the
13 implementation problems; why can't you do that?
14 We would explain how we perceived the benefit,
15 the cost, and other implementation concerns. There was
16 considerable give and take. We sincerely worked with the
17 staff to agree on those elements which we mutually believed
18 were important to a good access authorization program, and
19 they sincerely worked with us to eliminate or modify those
20 provisions which appeared to be particularly onerous or of
21 less value.
22 This led to agreement on many changes to what is
23 required in the rule. I will be discussing these
24 differences.
25 But the process led to the process of a much

1 better product.

2 It was a process that involved considerable

3 interaction between NUMARC and the NRC, considerable

4 discussion and an understanding of the objectives and

5 concerns of each side, and thus that process did a much

6 better job of balancing the concerns of the NRC with those

7 of the industry.

8 We achieved the guideline. NRC has said it is

9 acceptable. It is strongly endorsed by the industry, and at

10 an executive meeting in August of 1985 -- this is a NUMARC

11 executive meeting -- NUMARC Utilities overwhelmingly

12 endorsed the guideline.

13 The NRC submitted the rule package with the

14 guideline in late November 1985.

15 MR. ETHERINGTON: Your meetings with NRC, was

16 that with the staff?

17 MR. KENYON: Staff.

18 (Slide.)

19 Now, both the rule and the guideline have the

20 same major elements: a five-year background investigation,

21 psychological testing with clinical evaluation of

22 questionable testing results, and an observation program.

23 But there are significant differences. These

24 differences exist for two major reasons.

25 The first were changes to eliminate or favorably

1 modify the proposed rule provisions of lesser or marginal
2 value.
3 The second major category of change had to do
4 with adding provisions to address the implementation
5 difficulties.
6 I emphasize that all of these changes have been
7 judged acceptable to the NRC.
8 I want to begin with some of the more significant
9 differences on major program elements.
10 The first difference is that the NUMARC program
11 is consent based, meaning that an individual's permission is
12 required to conduct the background investigation. The rule
13 does not require the individual's consent.
14 We view this as a plus in terms of individual
15 rights.
16 With regard to the background investigation,
17 there are several significant differences. The rule
18 requires employment verification over a five-year
19 retroactive period.
20 This is particularly difficult in the case of
21 transient workers. There are significant gaps. The
22 individual can't remember all the employment that he has
23 had, and in these cases the guideline requires going to the
24 five years but accepting not less than three to recognize
25 this difference.

DAVbur

1 The NRC program requires verifying all claimed
2 employment. The guideline does not require verifying
3 employment which is older than five years. We just don't
4 see that as being very valuable.
5 The rule requires verifying all employment of any
6 duration, one day or longer. The guideline does not require
7 verifying employment of less than 30 days.
8 The rule requires verifying all education within
9 a five-year period. The guideline goes further. It
10 requires verifying the highest level of post-high school
11 education obtained. Regardless of how long ago, we think it
12 is important to verify the length of education.
13 The NRC program requires a military history
14 verification by a records check at the National Personnel
15 Records Center in St. Louis. That has already been
16 discussed that this cannot be done in a very timely way.
17 This requirement is there even if the individual claims no
18 military service or if the claimed military service is older
19 than five years.
20 The guideline, in contrast, requires verification
21 of military service only within the past five years and will
22 accept -- or if there is a discharge which is other than
23 honorable now -- we accept a DB-214 as evidence of an
24 honorable discharge. Thus, what I am saying is that the
25 guideline requires pursuing the records check from the

DAVbur

1 personnel center in St. Louis only if there is a
2 dishonorable discharge or only if there is adverse character
3 information. We just feel this is a more reasonable
4 approach.
5
6
7
8
9
10
11
12
13
14
15
16
17
18
19
20
21
22
23
24
25

DAV/bc

1 The regulatory guide requires only two developed
2 character references. The guideline goes further. It
3 requires checking with two listed references as well as two
4 developed references for the purpose of establishing
5 character and reputation.
6 The second area is psychological testing. The
7 rule requires the administration of two different tests
8 where the guideline requires just one test. Or, other
9 clinically acceptable procedures.
10 Whether or not there are blank areas because you
11 only do one test is a debatable issue. Our reasoning is
12 that the psychological test is just one element of an access
13 authorization program. The MMPI has been used extensively
14 within the industry. We believe it's effective. It may not
15 be foolproof. We're not claiming that it is. We just
16 believe it's one part of a program. Thus, we believe one
17 test is sufficient backed up by clinical evaluation, if
18 required.
19 A second test requires another couple of hours
20 and it's just that much more of a delay before you can get
21 an individual into the plant to begin work.
22 So we see little if any benefit. The NRC
23 accepted our reasoning in the guideline. Thus, we were a
24 little surprised and disappointed to hear that the two tests
25 are still in the rule requirement.

DAV/bc

1 DR. OKRENT: Sometime back, you mentioned
2 optional, I think, with regard to whether this evaluation
3 need be done, about the individual's rights.
4 MR. KENYON: It was necessary to get the
5 individual's consent to do the background investigation.
6 DR. OKRENT: If you did not receive consent?
7 MR. KENYON: Well, then we wouldn't proceed with
8 an access authorization qualification process; therefore,
9 the individual would not be given access.
10 DR. SHEWMON: I don't see how the NRC's rule
11 would be any different if it was required and they said no,
12 we won't comply. You wouldn't be hired under the NRC rule
13 either.
14 MR. KENYON: I agree that the individual would
15 not be hired under the NRC rule. But an individual does not
16 necessarily understand what's happened. The guideline
17 explains to the individual what this process is about. He
18 signs a form saying it's okay to do that; whereas, in the
19 NRC case, you just don't do it if the individual has asked
20 for employment.
21 DR. CARBON: You could still do that. Most of
22 the utilities do.
23 MR. KENYON: That's correct. But the guideline
24 says that all utilities will do this.
25 The next item concerns continual behavioral

DAV/bc

1 observation. The NRC program mandates several days of
2 supervisory training. This is a time requirement, not a
3 performance-based requirement. In consequence, the
4 guideline requires training as necessary such that
5 supervisors are able to detect aberrant behavior.
6 A subset of this particular program in the rule
7 has to do with a self-reporting provision. Some refer to it
8 as a self-incrimination provision. By that, I mean the
9 individual is required to report to the company subsequent
10 occurrences such as convictions or hospitalizations that may
11 have a bearing on individual's continued access
12 authorization.
13 This is a significant problem for utilities.
14 Most utilities have employee assistance programs. By that,
15 I mean employees with drug problems, alcohol problems,
16 psychological problems, and so forth, can refer themselves
17 to the assistance program and get help. And they are not
18 required to inform management. In fact, the program
19 provisions prohibit the administrators of this program in
20 informing management as to who is in the program.
21 Requiring employees to self-report or to
22 incriminate themselves, we believe, will be a significant
23 detriment to these employees to seek help. Therefore, we're
24 likely to have a worse situation by this requirement in that
25 we would have employees hiding their problems and, thus,

DAV/bc

1 not seeking help. Therefore, the guideline limits self-
2 incrimination to just reporting any arrests which may impact
3 on trustworthiness.
4 DR. OKRENT: I must say, it seems to me one can
5 argue both sides of that point.
6 MR. KENYON: I agree that you can argue both
7 sides of the point.
8 DR. OKRENT: I mean, the professional athletic
9 groups are in the midst of this problem and it's not at all
10 clear that the absence of a requirement for reporting has
11 helped.
12 MR. KENYON: But that's not the only answer to
13 the question. If you have an employee with a problem, if
14 you're able to detect that through the behavior observation
15 program, then you require the individual to get help and you
16 may remove his access authorization in the process. If you
17 don't know that there is a problem, the question is:
18 Are you better off by providing a program that
19 the employee can refer himself to without tipping his hand
20 that he has a problem? Or are you better off by saying you
21 must tell us you have a problem as a prerequisite to getting
22 into the program?
23 Now, I argue the former, but I agree, it's
24 debatable. An example of a highly prescriptive nature of
25 the rule and reg guide is that the regulatory guide requires

1 an annual continual behavior observation report for each
2 individual who has access authorization. A very
3 administrative and cumbersome process. We think it has
4 little value and it's not required by the guideline.
5 (Slide.)
6 There are other implementation differences. The
7 first concerns the types of clearances; both the rule and
8 the guideline recognize the need for a licensee to bring
9 workers to the site and grant unescorted access on
10 relatively short notice. This is to deal with outages, and
11 so forth.
12 The rules approach involves an interim clearance
13 which requires a complete background check, except criminal
14 and military history checks, which must be completed within
15 six months. As such, that provision is virtually useless in
16 addressing this problem.
17 The guideline, in contrast, has a temporary
18 clearance process based on a psychological test, a credit
19 check and one-developed character reference. It is limited
20 to 180 days; it cannot be transferred.
21 But this we believe is essential to deal with
22 unancitipated plant problems. It provides a reasonable
23 balance between assurance of trustworthiness, a balance
24 between the benefits and risk. And the NRC has concurred
25 with this in the guideline.

DAV/bc

With respect to transfer of clearances, the guideline provides many more options on how a clearance might be transferred. It is required that the information be cross-checked to ensure identity.

The guideline permits transferring all valid clearances except temporary clearances, whereas, the rule and reg guide limits transfer of clearances to nonlicensee employees.

The guideline permits a utility to reinstate unescorted access authorization if it has not been interrupted for more than 365 days, and if it was previously terminated under favorable circumstances.

There is no reinstatement provision in the rule. The guideline permits grandfathering all individuals who have valid access authorization at the time the guideline is effective; whereas, the rule, based on the presentations that have been made, limits grandfathering to personnel previously cleared under an industry standard program, which I guess means ANSI 3.3 or maybe ANSI 18.17.

This would require rescreening of many individuals who had access authorization for years without problems. The rule requires periodic, which we understand to mean, annual audits of contractors. The guideline agrees with that. But the guideline goes one step further in that it commits that each utility will have its own program

DAV/bc

1 independently evaluated every two years with the first
2 evaluation taking place within 12 months.
3 DR. MARK: Evaluated by whom?
4 MR. KENYON: Independently by other than those
5 who run the program. That could be done internal to the
6 utility or external to the utility, and by anybody whose
7 independent.
8 DR. MARK: Not by NUMARC, not by INPO?
9 MR. KENYON: Not by any particular organization,
10 just an independent evaluation. A significant advantage of
11 the guideline is that it provides some common audit
12 criteria. This permits sharing of audit results.
13 The significance of this is that a contractor
14 doing clearance work for 15 utilities does not have to be
15 audited 15 times.
16 Without going into a lot of examples, the rule,
17 and particularly the implementing regulatory guide, is far
18 more prescriptive than is necessary. There are many
19 arbitrary approaches. They do not accommodate reasonable
20 utility differences in organization philosophy or cost-
21 effective methods.
22 Finally, in contrast to the rule, the guideline
23 does not have an appeal process. We don't believe one is
24 required. We have many reasons why a prescriptive, due
25 process appeal procedure is undesirable, and I will talk

DAV/bc

about that.

(Slide.)

The two unresolved issues are compliance and appeal process. Let me first address compliance.

DR. OKRENT: Excuse me. Before you address that, you sort of went through rather quickly the grandfathering question. How good is our knowledge base that the costs prior to this, that this of itself is sufficient?

MR. KENYON: Knowledge of base varies between utilities. We're not saying it's a foolproof situation and that this is the only provision to prevent radiological sabotage.

What we are saying is that collectively we feel that the risks associated by grandfathering individuals who have been working at your plant for some period of time, obviously, some of them going a long way back, is not worth the effort to look through a background check on these individuals and psychological testing.

It's a risk/benefit judgment.

DR. OKRENT: Not even the psychological testing?

MR. KENYON: Not even the psychological testing.

DR. MARK: The rule doesn't require that either.

MR. KENYON: That's right.

DR. OKRENT: I don't particularly care at the moment whether either of them do. I'm a little curious that

DAV/bc

1 nothing is thought to be needed. I can look into another
2 area that used to be a set of chemicals known as "grass",
3 generally recognized as safe. I haven't looked at that for
4 some period of time because they're looking at others. But
5 it turned out that that wasn't quite true.
6 And it ended up being necessary to look.
7 DR. KERR: Have you talked to psychologists about
8 the ability to pick out potential saboteurs?
9 DR. OKRENT: No, I haven't.
10 DR. KERR: I haven't found one yet who says that
11 there exists a test.
12 DR. OKRENT: I'm sure you're right.
13 Nevertheless, what we seek here apparently is a blanket
14 grandfathering.
15 DR. REMICK: Dave, would they be subject to
16 observation?
17 MR. KENYON: That's right. Frankly, they've been
18 observed for a long time. I'm not arguing it's risk-free,
19 but we view the risk as very low.
20 MR. ETHERINGTON: In the decision guideline, are
21 you rather inflexible in these?
22 MR. KENYON: The guideline was something that we
23 worked out with the NRC staff. We were not at all
24 inflexible as to how we arrived at the guideline. The NRC
25 accepted what we had as a package. Therefore, the issue

1 wasn't pursued further.

2 What we have in the guideline is acceptable to

3 the NRC. There's the outstanding issue of enforcement and

4 the appeal process, which I'm about to address.

5 DR. MARK: To get to Okrent's question though, it

6 was my understanding there's really no serious difference

7 between the guideline and the rule with respect to

8 grandfathering.

9 MR. KENYON: The difference between the two is

10 that the NRC limits grandfathering to those who have been

11 granted access authorization under a program. It may not be

12 exactly the words, but an industry standard program. Thus,

13 they are taking issue not so much with grandfathering but

14 how good was that initial program way back when.

15 DR. MARK: Whereas, you say if it's not access

16 now, he keeps it?

17 MR. KENYON: Yes.

18 MR. MICHELSON: Even if there were no program,

19 you could screen him?

20 DR. MARK: Right.

21 MR. MICHELSON: That's the criterion.

22 DR. MARK: There could be a question about

23 grandfathering.

24 MR. KENYON: That's right.

25 MR. EBERSOLE: Let me ask a question about this

DAV/bc

1 grandfathering business. I recall an old movie where the
2 old man who had worked for the diamond company for years and
3 years was going to get cheated out of his pension. And the
4 fact that he'd been there a long time only augmented his
5 animosity to the company when he learned of that.
6 And he became -- he'd been there, you know, for a
7 number of years -- he became very potent in doing a lot of
8 damage.
9 Is there any activity wherein you examined
10 company practice which might legitimately raise a degree of
11 anger and concern on the part of an employee so that he is
12 now a different man than he was 20 years ago?
13 MR. KENYON: I think there are two aspects to the
14 answer. Are utilities concerned about changes in policy and
15 program that would anger employees? Most definitely. We're
16 very concerned about the morale of our people.
17 MR. EBERSOLE: On an individual basis.
18 MR. KENYON: Both collectively and individually.
19 Thus, if we did something collectively, which we would do
20 our darndest not to, or if we did something individually,
21 that's a flag. The employees are observed by their
22 supervisor as part of their continual behavioral
23 observation. So we have a reasonable possibility of
24 detecting a disgruntled employee and, on the basis of
25 observing changes in behavior, we have the mechanisms to

DAV/bc

1 act on that and have the employee tested, or referred to
2 counseling, or whatever.
3 MR. EBERSOLE: Would he be shrewd enough to see
4 it?
5 MR. KENYON: Perhaps. Perhaps not. I'm not
6 arguing that this is a risk-free situation. I believe we
7 have a reasonable chance of detecting that. Let me first
8 address the compliance issue.
9 Since the inception of the NUMARC involvement in
10 access authorization, we have had agreement with the NRC
11 that there must be a viable means to ensure compliance with
12 the guideline. The guideline does contain the following
13 compliance-related commitments as previously stated.
14 This is the independent evaluation of the utility
15 program within 12 months of the effective date and every two
16 years thereafter. And to the extent that contractors and
17 vendors are utilized in the access authorization program,
18 the utility or its designee will conduct an annual audit.
19 Now, also, a part of this issue, obviously, is
20 inspection and enforcement. We have always agreed with the
21 NRC that the NRC must have the right to inspect for
22 compliance. That's not been the issue.
23 I've previously stated that we've always felt
24 that there must be a viable means for enforcement.
25 Consequently, on January 30th, as I mentioned previously,

DAV/bc

1 NUMARC utilities committed to amend their security plans as
2 necessary to meet or exceed all guideline elements. If the
3 guideline is accepted in lieu of the rule, this is made in
4 the belief that such an amendment would be classified as an
5 upgrade to their security plans in accordance with the
6 provisions of 10 CFR 5054(P).
7 Now it's our understanding that this approach
8 makes the access authorization program enforcible by the
9 NRC. So it's our belief that this satisfactorily resolves
10 the compliance issue and, as I stated, a letter to this
11 effect has been sent to Stello.
12 (Slide.)
13 The other issue is the appeal process. We do not
14 agree with the NRC position as expressed by Mr. Fonner. And
15 the disagreement is based on three principles as shown on
16 this slide.
17 The first is that the licensee must have full
18 authority to decide who works at his nuclear plant within
19 the constraints of anti-discrimination laws. We believe
20 there's no constitutional right for employment at a nuclear
21 facility, and we believe that there are sufficient existing
22 means for an individual to seek redress for claimed wrongs.
23 Let me discuss each of these in some detail.
24 It's essential for a licensee to be able to decide who works
25 at his facilities. By that, I mean both direct employees

and craft personnel employed by contractors. I want to give you an illustration.

Most utilities have what's called the GPA contract. GPA stands for General Presidents Agreement. This agreement, which has been worked out with the international construction trades, provides craft workers to supplement plant maintenance and modification forces. It's done under a master agreement. And this agreement has a number of advantages, one of which is the ability to selectively hire personnel from the union halls by name.

Stated another way, this allows the utility or the contractor using this agreement to not hire those whose past performance shows poor productivity, poor workmanship, they're a trouble-maker, unreliable, and so forth.

Licensees are responsible for both the quality and the cost of their operations and whatever errors are made. There must be good workmanship. There must be adherence to procedures. There must be high productivity. These are essential.

DAVbw

1 Thus we must maintain the right for ourselves and
2 our contractors to set high standards regarding who works at
3 our facilities. It is unconscionable that we would be
4 relieved of this responsibility in favor of a third-party
5 arbitrator. It is not a right for employment at a nuclear
6 facility, therefore, there is no right for a bridge. It is
7 acknowledged that we must comply with all federal and state
8 laws concerning discrimination, and there are sufficient
9 existing means to address perceived wrongs. These include
10 Equal Employment Opportunity Commission, state human
11 relation commissions and, obviously, the courts.
12 In no sense do we think that there should be an
13 appeal process for contractor employees. With respect to
14 utility employees, if we do pull a clearance, the employee
15 is relocated within the company. We are not talking about
16 firing the individual or loss of pay. We will put him
17 through a rehabilitaiton program, and if it is appropriate
18 we will bring him back.
19 So there is, normally, not a loss of employment.
20 The NRC argues that we ought to have this appeal process,
21 because the Commission requested it, and because of an
22 acknowledged debate over the meaning of case law. I don't
23 find these reasons particularly compelling, particularly
24 considering the onerous nature of the appeal process, not so
25 much as described in the rule, but particularly as

1 DAVbw

1 described in the very prescriptive regulatory guide. Union
2 agreements are not the appropriate way to do this for most
3 utilities. Consequently, we believe another appeal
4 procedure is not required.
5 I think it is interesting to note that security
6 guards have to go through qualification requirements which
7 are very similar to these access authorization provisions,
8 and they don't have to have an appeal process for what they
9 go through and how those matters are settled. So I am not
10 sure why we have to have one for access authorization.
11 There are lots of utilities out there with access
12 authorization programs without an appeal process mandated by
13 the NRC.
14 DR. MARK: Is there a bit of experience, if
15 people apply for a job in a security outfit, they're not
16 necessarily accepted. They don't have an appeal, if they
17 are not accepted.
18 MR. KENYON: That is correct.
19 DR. MARK: Can you finish this in a very few
20 minutes? I think you have covered things pretty well.
21 MR. KENYON: Yes, I can.
22 Let me recap why we believe the guideline is the
23 best way to go.
24 DR. OKRENT: Excuse me. We are not free of
25 complaints. People have tried to point out poor practice

DAVbw

1 and ended up with no job. In fact, I have seen that
2 practice occur within the NRC. So I know that it is not a
3 make believe complaint.
4 I have to assume that to some extent the appeal
5 process is intended to provide some protection for this sort
6 of event. What protection do you have for that sort of
7 event, in what you are proposing? If I understand it
8 correctly, if you lift someone's clearance, he is stuck. He
9 can't do a certain type of job anymore.
10 MR. KENYON: Are you talking about an employee?
11 DR. OKRENT: I am talking about, let's say, a
12 contractor.
13 MR. KENYON: A contractor employee, if we feel
14 that that contractor employee should not work in our nuclear
15 facility, there is no appeal process for that individual,
16 unless he feels he wants to try and make a discrimination
17 case, in which case, he can go to the EEOC process or make a
18 court case out of it. It's not that there's no appeal
19 process. It is just that there is not one required by the
20 guideline, over and above existing mechanisms.
21 MR. SILBER: Bruce, if I might just add
22 something. Questions of harrassment and intimidation are
23 covered by a totally different set of laws. There is a
24 statute on the books, Section 206, I believe, of the Energy
25 Reorganization, which establishes civil and criminal

DAVbw

1 penalties. It is a totally different issue than the
2 question of security clearances. If someone believes that
3 they have been intimidated or harassed or are raising safety
4 complaints, there are established procedures before the
5 Department of Labor, which are appealable to the courts.
6 That is a different set of problems.
7 MR. MICHELSON: What prevents this guidance being
8 used as an excuse to get rid of an individual, really as the
9 basis for some other act? This is well-guarded,
10 semi-secretive as to the basis. It can be used as an excuse
11 to get rid of someone.
12 MR. SILBER: If a person believes he has been
13 intimidated or harassed for raising safety complaints, he is
14 free at any time, regardless of whether some other
15 "pretext" was ysed ti terminate him, to file an appropriate
16 proceeding with the Department of Labor. He is entitled to
17 a hearing. He is entitled to judicial review. The fact
18 that that may have been in the context of some other
19 requirement, whether it is a health physics tests or a
20 quality assurance certification or an access authorization,
21 it is irrelevant.
22 MR. KENYON: If it is an access authorization
23 denial, the guidline provides that the employee may look at
24 the material to know the basis.
25 So in recapping, the guideline provides the

DAVbw

1 guideline provides the necessary program elements for a good
2 access authorization program. It's been strongly endorsed
3 by the industry. It does provide a sufficient degree of
4 standardization, and it provides much better implementation
5 provisions. It allows us to go with less than five years of
6 employment history, but no less than three, which is
7 necessary to deal with the transient worker problem, who is
8 unable to provide a complete employment history for five
9 years. It prevents undermining the employee assistance
10 program by limiting self-reporting requirements. It
11 provides a viable temporary clearance program. It responds
12 to needs associatied with unanticipated problems.
13 This is in contast to the NRC's interim
14 clearance program, which is virtually useless to address
15 that issue. It provides a better means to transfer
16 clearances, and this is important to a computerized employee
17 data system being developed by six utilities in the
18 Northeast that allows you to exchange this information
19 through a linking of computers. That system is called the
20 nuclear employee data system, as I mentioned That will be
21 operational June 1st. It provides a means to reinstate
22 clearances which have been terminated under favorable
23 circumstances. It provides a reasonable grandfathering
24 provision. It permits sharing of audits, and it provides
25 for self-monitoring.

DAVbw

The guidelines provides far more flexibility. It is far less prescriptive than the rule. It permits tailoring to individual utility situations, and it allows more initiative. It is cost-effective. The strength of the guideline is that it has been developed by the industry, not as a mandate, but as a viable program. The guideline concepts are proven concepts. They are in effect at many utilities, and this has been done in a way where we are endeavoring to be as sensitive as we can to concerns of the morale of employees, which we believe is very important.

The guideline is enforceable. I have described how that can be achieved with the utility commitment to incorporate the guideline elements in the security plan. It is not even obvious to me that a policy statement is needed with that commitment.

So I have discussed the many advantages of the guideline. The guideline is acceptable to the NRC, with the possible caveat of this legal concern on the appeal process, but for all of these reasons, we recommend your endorsement of the NUMARC guidelines.

DR. MARK: We must cut it off there, unless there is something you feel is essential. You didn't mention anything at all about nonnationals. What is their situation?

MR. KENYON: For most nonnationals, we have

DAVbw

1 experience in conducting background investigations outside
2 the United States. It is difficult to do in some
3 countries. It is reasonable to achieve in others.
4 DR. MARK: You mean the three-year plus
5 background to apply to them?
6 MR. KENYON: That is right.
7 DR. MARK: If someone comes from Mexico, across
8 the Rio Grande, and rides on.
9 MR. KENYON: There are no exceptions to deal with
10 this issue. It is more reasonable to do through the
11 guideline, in our opinion, but we do not waive elements to
12 do that. If it turns out that it is impossible to clear the
13 individual and we really need him, then we will escort him.
14 DR. MARK: Other questions?
15 DR. REMICK: I have quick observation and then a
16 question.
17 In the Staff's slide, they referred to the NUMARC
18 initiative as industry self-regulation. I observe that
19 nowhere did you refer to it as self-regulation,
20 self-management and industry initiative. I think the
21 self-regulation is a red herring, but one question I would
22 have of Staff, Mr. Kenyon, I think his worries were that the
23 Staff acknowledges the guidances as an acceptable
24 alternative to the rule.
25 I would appreciate the Staff responding, if they

DAVbw

agree with that, or to what extent they agree with it.

MR. MC CORKLE: Yes. We acknowledge the fact that the guidelines -- and I said this is in my presentation -- would present an acceptable alternative, provided that we had assurance of the effective oversight, including inspection and enforcement, that the legal aspects of it were satisfied to the satisfaction of the Commission in regard to the appeal procedures.

DR. REMICK: Would you find that his commitment to upgrade security plans, which would then be enforceable, is that an acceptable means of enforcement?

MR. MC CORKLE: That was fine for I&E to do this, but the question then got into the legal aspects of it. It is a double-barreled question. And then it becomes part and parcel of the physical protection of the plant, and then, as Mr. Fonner says, if I understand you correctly, Bob, then it becomes a government-endorsed program. An adverse action could occur. Therefore, the question of appeal has to be settled.

Is that correct, Bob?

MR. FONNER: That is correct.

DR. REMICK: I would see that is no different than the current situation. People have committed, and you are enforcing, based on the commitment, and there is no appeal.

DAVbw

1 MR. MC CORKLE: The commitments in the plans are
2 very general in nature at the present time. As to the
3 difference on enforcement, I wou'd have to ask Mr. Fonner to
4 comment on that?
5 DR. SHEWMON: Well, they're flexible now, but all
6 utilities have committed that they will agree to these rules
7 under the NUMARC rules. ?
8 MR. MC CORKLE: As I understand the suggestion
9 that Mr. Kenyon made, and this came out in our meeting last
10 year, they suggested that oversight be exercised by having
11 physical protection plans amended to incorporate the
12 guidelines and a commitment to follow the guidelines. It
13 was suggested that since they were then part and parcel of
14 the plan, that they wouldn't be subject to inspection and
15 enforcement by the inspection organization. That led to the
16 next question on the appeal.
17 DR. OKRENT: I have a tangential question.
18 Did NUMARC do any work of its own on the
19 identification of vital areas, where that stands?
20 MR. KENYON: No, we have not.
21 DR. MARK: I think I have a question now for the
22 committee, if I may.
23 MR. WARD: Thank you, Mr. Kenyon.
24 DR. MARK: We do need to send some comment to the
25 Commission, because they, I believe, are in the course of

DAVbw

1 receiving Staff recommendations, and they have been held up
2 to wait for our comment. I have three questions.
3 I would like a show of hands or a nod or a
4 complaint. Let's leave the complaint until we sort the rest
5 of this out.
6 We need a letter in which I would propose that we
7 say the general nature of the provisions being imposed seem
8 to us to be reasonable. That is, the behavioral observance,
9 the background check. I am speaking only of the access
10 authorization.
11 Is it the committee's feeling that some statement
12 to that effect should be in our letter?
13 DR. LEWIS: Would we be buying the Reg Guide, if
14 we wrote such a thing, in your view? Would be going for the
15 whole packet?
16 DR. MARK: No. The general nature of the
17 provisions.
18 DR. LEWIS: Okay. Very good. I just want to be
19 clear.
20 MR. WARD: And those are essentially common to
21 both rule and guidelines.
22 DR. MARK: Yes. That would be one thing. There
23 is nothing specific in the rule about five-year background
24 for nonnationals. That is left to some Reg Guide.
25 MR. MC CORKLE: The package has been altered to

DAVbw

1 indicate that in the event that we are unsuccessful in
2 obtaining information from the country of origin, that the
3 investigation will be conducted to the maximum extent
4 possible. If it is less than five years, that we will then
5 require the development of additional references and true
6 identity.
7 MR. WARD: That is true, but it is not in the Reg
8 Guide.
9 DR. MARK: Wait a minute. The Reg Guide is not a
10 legal thing. The rule is --
11 MR. MC CORKLE: I realize, but the rule is
12 written in relatively nonprescriptive language. The Staff
13 reviews the plan. The Staff can dispose either through
14 approval or disapproval, if it does not meet the regulatory
15 criteria spelled out in the Reg Guide. I mean, our
16 regulations are not specific to that extent.
17 DR. MARK: The rule doesn't even include the five
18 year phase.
19 MR. MC CORKLE: The rule requires five years for
20 everybody.
21 DR. MARK: That is the Reg Guide, not the rule.
22 MR. MC CORKLE: I am sorry; yes.
23 DR. LEWIS: This is a classic problem.
24 DR. SIESS: They are going to inspect against the
25 Reg Guide.

1 DAVbw

1 MR. MC CORKLE: No, I disagree. Inspect against
2 the approved plan.
3 DR. MARK: I don't see why they have to go
4 blindly into it again.
5 DR. LEWIS: Because they don't listen. We have
6 complained bitterly.
7 MR. MC CORKLE: If you would listen, we inspect
8 against the approved plan. We do not inspect against the
9 rule, nor do we inspect against the Reg Guide. I have I&E
10 here, who I think will affirm that statement.
11 DR. KERR: Doesn't the approved plan have to
12 follow the rule?
13 MR. MC CORKLE: The rule is a general statement.
14 DR. KERR: You can't answer my question?
15 MR. BURNETT: Of course, the plan has to follow
16 the rules.
17 DR. KERR: Then you inspect against the rules.
18 MR. BURNETT: No, because the rule is broad.
19 MR. WARD: It is not detailed enough.
20 DR. SIESS: When they cite a violation, they will
21 quote from the approved plan, and say that in spite of this
22 statement, they did not do such-and-such.
23 DR. KERR: No until we got to your division, the
24 special category, we used to be told that the Regulatory
25 Guide represented one way of satisfying the rule.

MR. BURNETT: They still do. The language is very clear.

DR. KERR: It is not the only way, so presumably one could have a rule plan that would not follow the Reg Guide.

MR. BURNETT: Absolutely correct.

MR. MC CORKLE: That is very clear, both in the rule and in the Reg Guide.

DR. SIESS: Possible, but highly unlikely.

MR. BUSH: You could have the rule. The licensee could commit to implementing the rule with the industry guide and their security plan, and that is what we would inspect and enforce what they have committed to in their plan. You can have it any way you want it, really.

DR. MARK: I don't know why the rule doesn't have a five-year backgorund in it, when it says it must have background check in it.

Well, all right. Then we wil need to make some comments on the position we recommend with respect to going by rule or by going by the industry, as far as guidelines. I don't know.

What is your feeling, Mr. Chairman? Do we want to op for one or the other, or do we want to say that they should consider whichever they wan?

MR. WARD: I think if there is a consensus on the

1 DAVbw

1 committee in one direction or another, we should express
2 it.
3 DR. SIESS: We don't have a consensus yet.
4 MR. WARD: We don't know whether there is or not,
5 but we have a process for finding out, I guess.
6 DR. MARK: Do you want to do that here and now?
7 MR. WARD: I suggest it might be better to do it
8 in our discussion on the letter.
9 DR. MARK: Okay. That is all I have.
10 DR. OKRENT: It is not clear to me that the plan
11 is all that well-thought-through.
12 DR. SHEWMON: You mean grandfathering?
13 DR. OKRENT: Sorry. We can talk about it
14 tomorrow.
15 MR. WARD: All right. Thank you very much,
16 gentlemen.
17 Let's break and return from lunch at 1:00
18 o'clock.
19 (Whereupon at 12:20 p.m., the meeting was
20 adjourned, to reconvene at 1:00 p.m., this same day.)
21
22
23
24
25

DAVbur 1 AFTERNOON SESSION (1:05 p.m.)

2 MR. WARD: Gentlemen, let me just give a brief
3 introduction.
4 Remember, sometime back the committee expressed
5 interest in the check operator concept, and all that meant
6 and probably still means various things to various people.
7 The committee did about a year ago recommend to the
8 Commission that they have the staff consider whether the
9 concept might be useful in safety regulation of nuclear
10 power.
11 We understood over the past year or so that the
12 staff hasn't really pursued anything there very actively,
13 but that the industry has through NUMARC.
14 So today there isn't particular action indicated
15 to be necessary for the committee today, but we have asked
16 for some briefings to bring us up to date on what is going
17 on with regard to the concept of the check operator.
18 First, we will have Mr. Bruce Boger of the staff
19 tell us what they are doing.
20 Next, we will have the benefit of a presentation
21 from Mr. Thomas Penland of the FAA, who will describe to us
22 the check pilot concept as used by the FAA and may have
23 some concepts on the applicability of that concept, as he
24 sees it, to nuclear power operation.
25 Then finally, Mr. John Griffin is here,

1 DAVbur

1 representing NUMARC. He will describe the NUMARC program in
2 this area.
3 Let's go ahead with Mr. Boger.
4 (Slide.)
5 MR. BOGER: Good afternoon. My name is Bruce
6 Boger. I am the Chief of the Operator Licensing Branch.
7 As Dave indicated, I am here to provide some
8 information on staff efforts with respect to the check
9 operator concept.
10 We actually started working on this about 1984.
11 So it has been really two years. That is an indication of
12 how time flies.
13 My presentation will cover basically the check
14 operator concept as we derived it back in about April of
15 1984, and at that time we identified that the check operator
16 concept was perhaps one means of changing what we are doing
17 in requalification.
18 We were requested by the Commission to do it, and
19 we came up with a SECY paper, 84-167, but in that paper we
20 recognized that there were other changes that were probably
21 going to have to be made as a result of Section 306 of the
22 waste disposal bill.
23 So I will also address some of the changes that
24 have taken place since the original staff paper with respect
25 to NRC changes in requalification.

DAVbur

(Slide.)

In SECY 84-167, we performed a comparison, or at least an analysis, of what the FAA does in their system of designated representatives.

Tom Penland, as Dave indicated, is here to present some information on how the FAA implements their check pilot program and probably, with a little prodding, will tell you how the FAA interacts with the airlines in a comprehensive checking of pilots.

As the name suggests, check operator was modeled after the check pilot concept used by the FAA. The scope of the check operator, as we saw it, was solely to perform requalification exams only; in particular, with regard to requalification exams, only the operating portion. That is the simulator exam or the oral exam, depending on the facility.

The candidates would be selected by the utility from the people available that had an SRO license, a current SRO license, and about two years of experience as an SRO. The NRC would then choose from a list that the facilities had provided us.

The NRC would then establish training criteria. To prepare the check operators for examinations, we provide them training on how to implement those criteria. Then we would certify them by watching them give a check exam.

1 DAVbur

1 As far as auditing goes, we intended on auditing
2 the check operator during the conduct of a check exam
3 sometime during each year. We would also require that the
4 check operator attend a refresher training course provided
5 by the NRC, also that the check operator would maintain his
6 own proficiency in the facility's requalification
7 facilities control program.
8 At the time that we looked into the program, we
9 identified several issues of concern.
10 First and foremost was the industry support that
11 we did not see supporting the program. Basically, this was
12 the time when facilities were expanding their licensing
13 staffs from five shifts to six shifts. They were going from
14 one SRO on shift to two SROs on shift. So this demand that
15 was being placed on SROs was even more critical.
16 I think everyone recognizes that the
17 qualifications of the senior reactor operators, with several
18 years of operator experience, are invaluable in the
19 operation of the plant, and so everybody wanted a piece of
20 these same people.
21 We also originally had the idea that the check
22 operator would not be used in the same facility that he was
23 licensed on, and that was to avoid a conflict of interest.
24 We subsequently rethought that issue and decided it would be
25 best to go ahead and have the check operator examine people

1 DAVbur

1 on his own facility. However, we would have to come up with
2 some way to grapple with the conflict of interest concern,
3 especially at small facilities that had a few operating
4 people that would know each other because of their shift
5 operations.
6 Finally, our legislative authority does not
7 permit us really to give to the check operator the ability
8 to sign a license or sign a renewal certifying that that
9 person has a new current license.
10 We would have to look into that. That was one of
11 the areas that ELD, our legal department, would look into.
12 What we would have to do until then would be to accept the
13 facility's certification that someone had received a check
14 operator examination.
15 That is similar to what we do now with the Senior
16 VP for Nuclear certifying that people have completed
17 requalification.
18 DR. REMICK: I am not quite sure why the staff
19 would limit a check operator just to administering the oral
20 part of the exam when in the past still 90 percent of the
21 utilities are conducting requal exams with somebody in the
22 organization writing the exam. If this person is the
23 appropriate person, I certainly would not exclude them.
24 If it is a question of conflict of interest, it
25 is nothing new either because somebody at the utility right

1 DAVbur

now in 90 percent of the cases is conducting the examination.

I don't see those as new issues that are impediments. I think they are things we have to take into consideration, but they exist.

MR. BOGER: We felt that the writing and the written exam would entail a lot more of a person's time as far as a couple of weeks to prepare it, then to grade, and things like that.

DR. REMICK: I would mandate that that was appropriate first to do within the utility. I wouldn't exclude it. Somebody from the utility has to do that.

MR. BOGER: That is correct.

DR. LEWIS: Could I just ask? You said, I believe, that you felt that you didn't have the authority to delegate or you didn't have the legal authority to delegate to somebody else the authority to actually sign off on an operator.

Is there something defective in the NRC enabling legislation which does that?

Because FAA does it all the time?

MR. BOGER: I don't know if you consider it a defect in ours or something they have to enhance theirs.

DR. LEWIS: There is something they have that you don't have?

1 MR. BOGER: I believe so.

2 MR. WARD: We are going to hear from

3 Mr. Penland.

4 DR. LEWIS: Very well, excuse me. I am jumping

5 the gun.

6 DR. REMICK: Once again, I wouldn't see that as

7 an impediment.

8 I am not certain if the person would have to sign

9 the relicensing. All he can say is that this person has

10 satisfactorily passed the relicensing exam that I have

11 administered.

12 That is what you get now. It was a certified

13 facility, and he has had the training, and so forth. I

14 don't see any need for a change.

15 MR. BOGER: We were looking for ways, if we were

16 going to model our program after the FAA program, that it

17 could be like it in as many ways as possible. That is one

18 way that it would be different.

19 (Slide.)

20 Since April of 1984, there have been several

21 changes that have taken place with respect to proposed

22 changes, Part 55.

23 Back in December, when we addressed the full

24 committee on Part 55 changes, we identified several aspects

25 that would change in the proposed rule.

1 Basically, one change is that we would go from an
2 annual written exam to a biennial written exam, so that we
3 would cut the written exam in half or the frequency of it in
4 half.
5 We redefined the annual operating evaluation to
6 make sure that it was consistently applied by all people.
7 We extended the license period from two years to
8 six years. That is important because that means we don't
9 see any applications or certifications of people every two
10 years like we do now with people every six years.
11 Finally, in some respects most importantly, we
12 identified that we would use facility learning objectives as
13 the primary source of information for our examinations.
14 That is important because of the second aspect of our
15 efforts, which have been our exam development efforts, which
16 have been aimed at producing a content-valid, job-related
17 examination. We want to make sure that the exam we give has
18 a good relationship to the job.
19 That is where our efforts have been in the past
20 two years.
21 Basically, the way we have tried to do that is to
22 establish this knowledge and abilities catalog. This
23 catalog is one where we use the INPO job task analysis and
24 have it condensed into an examination version of the task
25 analysis, came up with the knowledges and abilities that

1 would be obtained by SROs or ROs during their training.

2 We had the catalog rated by SROs and added

3 similar qualifications to the check operators that we are

4 talking about. That is going to serve as the basis for

5 the examination test domain.

6 The examiner handbook uses the facility learning

7 objectives along with this knowledge and abilities catalog

8 to come up with examinations and examination questions that

9 are job related and content valid. So that is part of the

10 link back to making the examination more operationally

11 oriented and better related to the job from the operator or

12 senior operator.

13 That is about where we stand on check operators

14 and qualification changes.

15 MR. WARD: Thanks.

16 Any questions for Mr. Boger?

17 MR. REED: So you have a concept that is alive.

18 You are studying whether you are going to move forward with

19 it or not.

20 Meanwhile, I thought I saw some sort of

21 announcement just recently that you were considering going

22 up from 10 percent to 20 percent NRC-conducted

23 reexaminations.

24 So this is a concept that may never fly. The

25 continuing NRC involvement in doing the exams is there.

MR. BOGER: I think what we have done is we have tried to incorporate in the rule change the ability to stick in the check operator concept. That opportunity exists in the new rule.

MR. REED: Is that in addition to another activity, or does it displace the government-conducted percent of the exams?

MR. BOGER: The percentage is budget driven, and as far as I know, it is still at 20 percent of 50 percent of the facilities, which is the 10 percent number.

MR. REED: But I thought it was going from 10 percent to 20 percent of the 50 percent. It is something I just read recently.

I heard at the outset that originally that finally the objective is 100 percent.

MR. BOGER: That was the original concept back in 1979. As a matter of fact, when the Commission first told us to start giving requalification exams, they told us to examine everyone, and then we arrived at the 20 percent and 50 percent based on resources.

MR. REED: I guess I have to go back again. Is the check operator a replacement for that, or is it in addition?

MR. BOGER: It was a substitute for the NRC examination. If someone -- if you went to the check

DAVbur

1 operator concept, we would be checking the check operators
2 rather than checking the operators.
3 DR. REMICK: Bruce, my understanding of what you
4 are saying of what you are saying about the proposed changes
5 in 1055 mean that you would incorporate the provision that
6 the staff could administer requal exams if you wanted them
7 to or the check operator concept was also a possibility.
8 But neither would be mandated.
9 Basically, the Commission would have to decide
10 what they wanted to do.
11 MR. BOGER: It says that we would administer the
12 examination, including that we would accept the facility's
13 certification.
14 DR. REMICK: So either would be a possibility
15 under the rule?
16 MR. BOGER: Right, and we understand that the
17 industry does have something. We have not moved forward
18 because we have not seen the industry support for the
19 program.
20 MR. REED: One other question: there was a
21 meeting between the Commissioners and NUMARC about six
22 months ago or something, where the Commissioners put a
23 surprise question to NUMARC, asking NUMARC to answer it
24 within a week or so, with respect to whether they favored
25 the check operator program, did they have an interest in it,

and what would they do?

As I recall, I sat at that meeting upstairs, and NUMARC said they favored it and they were going to look into it and they were going to get back to the Commissioners.

Has that ever happened?

MR. BOGER: You will have to ask them.

MR. WARD: We will hear a presentation on it.

Thank you very much, Bruce.

Our next speaker is Mr. Thomas Penland, who is with the FAA. We appreciate your coming today, Mr. Penland, to describe the check pilot concept.

MR. PENLAND: Thank you, Bruce.

Earlier this year, a request was made to the Agency to provide information with reference to our present system and a little bit of history as to how it has worked through the years as far as the Agency's ability to provide check pilots, check airmen.

Several of these terms are going to be used synonymously. They all come to one thing, though, that at some point in time we have established specific goals and requirements that aviators have to be evaluated, and in that evaluation process, whether it is conducted by the Agency or our representatives, my particular area -- I am with the FAA. As indicated, I am in the Technical Standards and Training Area and within the division which is Air

1 DAVbur

1 Transportation.

2 I have primary responsibility for aircraft that

3 operate in air commerce or, for most of us, the aircraft

4 that you fly on a daily basis to transport yourself back and

5 forth between Point A and Point B, such as California and

6 New York, or whatever.

7 However, our system is so wide in scope that

8 whether our office has specific responsibility, we also are

9 in a posture where anybody who has a pilot's license, a

10 mechanic's rating, works in the system and takes a written

11 examination also falls under our direct jurisdiction and

12 possibly by one of our representatives.

13 To give you a little bit of background, the

14 Federal Aviation Act of 1958 came about primarily as a

15 result of some major accidents that had occurred during that

16 timeframe. Congress felt it was necessary to try to develop

17 a system and a check and balance. Of course, the Federal

18 Aviation Act of '58 basically promulgated that.

19 DR. MOELLER: Who do you train?

20 You were saying you have training in your title.

21 MR. PENLAND: We provide the guidance which is

22 currently used in the field by our regions and also our

23 district offices to the standards, and we have specific

24 Delta Airlines, United, and American.

25 I will use names like that.

1 DAVbur

Also, during my presentation -- I know we are both in very technical areas -- if I get into acronyms, please stop me. I am not as familiar with your acronyms, and I know you are not as familiar with mine. I will try to stay away from them.

I am still not sure -- as I look around the room, the ACR and some of the other terms don't mean much, but I will do the same.

Basically, what we found was that every aspect of the Agency could be looked at by a representative, and the FAR-183 established the Administrator -- or gave him the capability -- I think this is what you were alluding to earlier -- to establish representatives in the field that are not working for the Agency from the standpoint of employment, however who perform duties and responsibilities that the Administrator finds acceptable.

An example of those, just to read down through the list, are aviation medical examiners. There are people out there who have that responsibility to provide the medical exams.

Pilot examiners, which you are most interested in, since it is associated with the NRC.

Technical personnel examiners that might get into inspecting parts and materials before returning to service aircraft.

1 Design aircraft maintenance inspectors, who are
2 people who would look at the actual building of the Boeing
3 747 and make recommendations to us and actually stamp and
4 approve it.
5 However, at any time it would also fall under the
6 Agency to review that process.
7 And engineering representatives, who design the
8 aircraft, and manufacturing inspector representatives, who
9 actually physically build the aircraft on an ongoing basis.
10 MR. REED: They all fall under the general
11 category of "designated representative"?
12 MR. PENLAND: That is exactly right. As the
13 regulation says, kinds of designation privileges. Those are
14 the people whom the Administrator has the capability to
15 authorize that authority to.
16 So if you were to look at one broad spectrum,
17 what we are really saying is the FAA works off of a
18 designated examiner program.
19 There are two programs and two main points that
20 foster that, one of which is policy and lack of funds, and
21 when there were only one or two aircraft in the system we
22 didn't have the problem. Now that there are 200,000, there
23 is no way that you can have that many inspectors out there.
24 DR. MOELLER: Excuse me. You were talking about
25 medical exams. In a sense, that is like a check operator.

1 I presume you don't have the M.D.'s employed by
2 the FAA, but you authorize M.D.'s to do the exams?
3 MR. PENLAND: That is correct. What would
4 transpire there is we have within the region a medical
5 examiner. We also have within headquarters a medical
6 examiner.
7 They have a program whereby they designate,
8 train, and accept doctors from the outside who have attended
9 schools and programs. Then they go out and perform the same
10 functions.
11 DR. MOELLER: Are these doctors pilots
12 themselves?
13 MR. PENLAND: No. That is not a prerequisite.
14 The main thing is that they are familiar with aviation
15 medicine and some of the restrictions associated with flying
16 and its peculiarities.
17 What will usually happen in that situation, if
18 you want to talk about the doctors, is if they identify
19 something that looks like a potential problem that is
20 brought to the attention of the Agency, and it is through
21 the Agency, if there is a problem, that it has to be
22 corrected and cleared.
23 The doctor may make a ruling and say, well, it is
24 not important, and they would sign off a form, and it would
25 go no further. But if he indicates there is a problem, it

DAVbur

1 behooves the individual who had the medical problem to get
2 it corrected.
3
4
5
6
7
8
9
10
11
12
13
14
15
16
17
18
19
20
21
22
23
24
25

DR. LEWIS: There's a slight extra thing in the case of doctors which doesn't apply to the others. If I understand correctly, when the doctor signs it off and gives you your certificate, it really isn't final. It's good for 90 days.

It has to go to Oklahoma City and then the final certificate arrives from FAA.

MR. PENLAND: Okay. Each area in the medical, be it the medical, be it the engineering, has some strings attached. The thread of commonality there is that you're provided the certificate and you continue to do what you were doing. Each one has a timetable. In some cases, there are no timetables, but there is a review process.

And to add on to that, I'll add one more phase. There's what we call 609 of the Federal Aviation Act, which allows any inspector at any time to go in and make sure that you meet the original requirements of whatever it is -- be it the certificate, be it the aircraft, engineering -- that it meets the requirements. So we have the capability to go back into the program that we deem necessary.

Now, in the case that you're talking about there is the review process, correct. However, that review process is looking at a form that doesn't have anything out of the norm. So if the doctor has sent that form through, unless there's an error, chances are there wouldn't be

DAV/bc

1 anything at all. Yes, sir?

2 DR. OKRENT: Do you check maintenance personnel?

3 MR. PENLAND: Yes, sir. Every phase of operation

4 that we conduct at some point has a designated

5 representative. In fact, what I did today was I brought

6 along some of the orders, which I will leave here, that

7 control, that provide the guidance.

8 This is not all of them. This is just a few that

9 I could grab. Anything from the conduct of airmen, written

10 tests. We have people who conduct those. A pilot examiner

11 handbook. This is for what we think of as the smaller type

12 aircraft, air carrier operations. The inspector's handbook,

13 Part 135. Here, again, smaller pilot flight instructor

14 examiner programs. It just goes on and on and on.

15 So we find ourselves in a posture of providing a

16 lot of guidance out there for these people. Okay.

17 That's the general concept. I get a little

18 specific in the letter. A couple of areas that you

19 requested that I tried to comment on, a brief description of

20 the system used for initial licensing and for the periodic

21 requalifications as pilots of commercial airplanes.

22 The letter indicated you were looking more at the

23 larger aircraft because, of course, the larger airplane is

24 the one that gets the most interest. The 747 is more

25 complex.

1 What I'd also like to call your attention to the
2 fact is don't get lost in the larger aircraft. I'm saying
3 that if I check airmen, it equates a nuclear reactor to the
4 747. Our program is so large, we're checking so many
5 different phases, that as you look at it, check airmen, look
6 at the specific individual.
7 That's fine, but we look at so many different
8 parts of that -- from the maintenance, from the design of
9 the aircraft, to the actual written examination, to the
10 oral, to the flight test, to the training that recovering
11 may be one point, maybe 50 points. So we have a chance to
12 test each one of those areas.
13 DR. LEWIS: If our letter had emphasized large
14 aircraft, you should ignore it.
15 MR. PENLAND: Okay. The 121 program, I'll talk a
16 little bit about that, is an efficiency check, basically.
17 Every six months our pilots are looked at. This is
18 something they grew up with in the system. They were tested
19 the day they got the license. They're reevaluated on what
20 we call a biannual flight review. And if they go into a
21 major carrier, such as 121, they're looked at at a minimum
22 every six months.
23 That six months, we have the ability to move it
24 either 30 days before or 30 days after the month in which it
25 occurs, but they're still looked at.

1 Are they looked at by a designated
2 representative? In most cases, yes. However, our
3 inspectors have what we call a work program that mandates
4 that they get out and specifically look at a certain number,
5 so we're always testing the system for weaknesses. And in
6 that test for weaknesses, if they're identified, then we
7 allocate more time and more resources in order to go further
8 and further into the program.
9 And as you read in the newspapers and comments,
10 some of the airlines have had problems. This is what
11 usually generates that: the need for indepth inspection;
12 the initial licensing.
13 DR. OKRENT: Excuse me. I want to pursue that a
14 bit. You said something that suggested something that had
15 occurred that indicated an airline needed more indepth
16 inspection. Of course, we recently had the case of Arrow
17 Airlines, where it was late in the game sort of. It seems
18 that the more indepth inspection occurred -- what I'm trying
19 to understand is how does your system work, particularly in
20 the area of maintenance, which strikes me as a more diffuse
21 thing than checking the pilot?
22 Maybe I'm wrong. And why did the practices of
23 American Airlines creates difficulties, and why did the
24 practices of Eastern occur and not get picked up by check
25 maintenance? Is it just too much to expect of check

1 maintenance? Your comments on that?

2 MR. PENLAND: I can comment, but I'll have to

3 draw a parallel here and at least point out that I'm not a

4 maintenance inspector.

5 In the agency, I do hold a maintenance

6 certificate so I'm qualified, although I don't function in

7 that capacity. I'll give you as much insight as I can

8 without getting myself into trouble and overstepping my

9 boundaries.

10 But, basically, what transpires here is that your

11 interest in Arrow, of course, which is the most recent to

12 get in the news, we have an ongoing inspection program.

13 That is at a field level. That inspection is generally

14 quite good and will identify problems.

15 In other words, each air carrier sitting out

16 there has what we call a principal maintenance inspector

17 totally responsible for that airline, looking over its

18 shoulders in all cases and making sure that he has adequate

19 checks and procedures.

20 The checks and procedures of course are only as

21 good as the time and the place when he looked at it and the

22 person looking at it. And to say that everything is going

23 to be 100 percent efficient and there will never be a

24 problem, we just wouldn't do that in the agency.

25 In Arrow's case, you're saying now that the

1 agency has gone back in. They've gone back in with a team
2 that might consist of 20 or 30 people. A lot of manhours.
3 And so they're able to take a program apart effectively.
4 In doing so, of course, you're going to get a
5 more indepth inspection. American Airlines, you were
6 interested in. You commented on. American Airlines has
7 gone to computerization.
8 DR. OKRENT: They had a DC-10 overall problem.
9 MR. PENLAND: Basically, instead of removing the
10 engine, they removed the pylon, okay? In the removal of the
11 pylon, they didn't realize that over a period of time it
12 would actually weaken certain points.
13 This is something that the average inspector, you
14 can say he should have caught that. He's not necessarily an
15 engineer. It's beyond the scope generally. And,
16 unfortunately, the redundancy built within the aircraft
17 under Part 25, you hope that type of thing would never
18 occur. But, yes, sir.
19 MR. EBERSOLE: In the matter of redundancy, in
20 the case of Eastern Airlines out of Miami and the overage, I
21 guess it must have been 15 or 20 years ago, Ernest Gann
22 wrote about the evil of maintaining all your resources at
23 one point in time.
24 Has it taken that long for this lesson to be
25 picked up by the FAA? What is there now in place that says

1 don't touch all your resources at one point in time?

2 MR. PENLAND: You're getting into an area of

3 maintenance that I don't know what specific correction was

4 taken from that standpoint. Operationally, I can talk to

5 pilot training and everything, so I can't really discuss

6 that area with any credibility.

7 MR. EBERSOLE: Is it still true also, well, it's

8 only a few gallons, I believe, of oil per engine, but that

9 progressive loss is not monitored.

10 MR. PENLAND: I have a little problem in

11 understanding this.

12 MR. WARD: Jessie, you're outside of this area.

13 MR. EBERSOLE: I'm trying to ask that in the

14 context of what we have in our problem set here.

15 MR. PENLAND: I can acknowledge if you take all

16 the oil out of the engine that it quits running. I have to

17 go that simple, unfortunately.

18 MR. WARD: Maybe we ought to try to keep on the

19 subject. Could I ask...you said that the inspectors, FAA

20 employees, inspectors, do they do that just by auditing?

21 Or, for example, do they sometimes do the task that is

22 primarily done by a designated rep as a means of auditing?

23 Or, do they just audit?

24 MR. PENLAND: No. The inspector at any time has

25 the authority to step in and perform all functions. In

DAV/bc

1 fact, the designated representative is working in
2 conjunction with that TMI or TMI, who is the principal
3 maintenance inspector, or principal operations inspector.
4 He is performing a duty for us. As if you sent someone out
5 to perform a function for you. If, at any time, you wanted
6 to step in and perform that function, that's your
7 authority. Or to monitor and to observe.
8 We refer to those as spotchecks, ramp checks,
9 annual base inspections.
10 MR. WARD: In a sense, these designated reps are
11 working under the fairly direct supervision of FAA
12 employees.
13 MR. PENLAND: Yes. A good example of that would
14 be your air crew program managers. They are the people who
15 are directly responsible from the agency's standpoint for
16 running a check airmen program for an air line. And that
17 individual would function as the responsible party, but the
18 designees would always be discussing.
19 So, in other words, any problems they have when
20 they go out to give a check, they would get back to their
21 FAA representative. He would look at the paperwork. He
22 would observe a specific number of flight checks which are
23 given. He would observe training to make sure the level of
24 training is at such a standard that it supports the final
25 check. Yes, sir?

DR. SHEWMON: Is a flight attendant an airman? What is an airman?

MR. PENLAND: Normally, who we're talking about here is the flight crew that are on the flight deck -- the pilot, the co-pilot, the flight engineer.

DR. SHEWMON: Those are all three airmen?

MR. PENLAND: Those are airmen.

DR. SHEWMON: Thank you.

MR. PENLAND: When you get into the definition of "airmen", if we stay within the flight crew concept, we'll be a little better off.

MR. REED: When a designated rep finds something wrong or has a problem, does he first go to the airline management to seek satisfaction? Or would he go to the FAA?

MR. PENLAND: The principal operations inspector, you're talking about. The representative, I can't tell you. I can tell you what his course of action should be. When you say does he go to the specific company, let's say he finds a deficiency in the individual who is taking the flight check.

What would transpire there is the individual would be given additional training in order to bring him up to the standard.

Now, bringing him up to that standard, there would be no point there that he would find it necessary to

1 really go back to the company as such. And it could be just
2 the deficiency of one individual at one time.
3 Now you're alluding to the fact that this has
4 become symptomatic and is more indepth and needs looking at
5 a little more. He could very easily through his own records
6 and comments, which are placed on those check forms,
7 indicate that. As such, it would get back to the FAA and
8 the FAA might look at the training program and say that this
9 program needs a little bit more --
10 MR. REED: He has an open avenue of reporting in
11 either direction and he has a responsibility to make sure --
12 MR. PENLAND: That he uses, that's correct. And
13 he uses it effectively that way.
14 DR. SHEWMON: But to get the additional training,
15 he has to talk to the man's supervisor first off, I assume.
16 MR. PENLAND: What would happen is, it's like you
17 went out to get a driver's license on your car and you
18 failed. Okay?
19 The program itself has built into it additional
20 training standards.
21 DR. SHEWMON: Don't make it too simple. His
22 question was do they go to the management of the FAA. And
23 they have to go to the management to get the additional
24 training implemented.
25 MR. PENLAND: Okay. Once it reaches, as I said,

DAV/bc

1 a higher level than one person, if it gets on to a higher
2 level, for one person failing a check, it would not be
3 symptomatic of an entire airline's training program in any
4 way, form or fashion.
5 DR. REMICK: But how does this person who shows
6 the deficiency get the additional training? Is it through
7 his company, that provides the training?
8 MR. PENLAND: That's correct. What they have
9 built into their training is what we call recurrency. It
10 could be just recurrent training. It could be additional
11 training. An additional five hours is automatically given
12 to someone who fails a check. Their training program is so
13 self-inclusive that it automatically absorbs this type of
14 problem. And if it's not, there is when we're talking about
15 stepping outside the normal boundaries. You might have to
16 go forward to the agency or to the company and say let's
17 increase the training, or change the training program.
18 DR. REMICK: I hate to belabor this but to make
19 sure I understand, the check pilot, if he finds somebody
20 didn't pass the examination he gave them, does he just tell
21 that person? Or does he go to this person's training
22 manager and say this person, I think he needs some more of
23 your training before I'll check him again.
24 MR. PENLAND: He would make the recommendation
25 and the recommendation, someone is going to authorize that

1 additional training. Yes.

2 DR. REMICK: So he does go to the company? The

3 training manager?

4 MR. PENLAND: Through the training manager,

5 whatever it is. There's different names for these people

6 out there. In small companies, it could be a matter of an

7 additional two hours that he comes back and needs another

8 check.

9 Or we do authorize...let's say that he fails a

10 specific objective. We allow them to stop the check at that

11 point, provide training on the spot and recheck him. This

12 could be nothing more than an individual, you know, getting

13 simple here, but he drives past the stoplight that says that

14 you won't go within this boundary or past that point. We

15 look at it.

16 An example of this would be making an ILS

17 approach. He is allowed to go to one dot out of the circle

18 and he goes a dot and a half. So he may say let's go ahead

19 and shoot one for practice and make sure your proficiency is

20 there.

21 Yes, sir?

22 MR. MICHELSON: What's the relationship between

23 the check pilot and the company and his operators?

24 MR. PENLAND: We require that the check pilot be

25 a company employee, of the same company. In fact, we will

1 not let them cross boundaries.

2 MR. MICHELSON: Is there a reason for that?

3 MR. PENLAND: Usually, because the company itself

4 is specific and there is a training program that he has to

5 take in order to be --

6 MR. MICHELSON: Why don't the regulations allow

7 it?

8 MR. PENLAND: Okay. An American Airlines pilot

9 to give a check to let's say a Pan American pilot, Pan

10 American is flying different equipment, different training

11 techniques, different physical locations and instruments.

12 MR. MICHELSON: Suppose the equipment's the same?

13 MR. PENLAND: We can't assume that. There are

14 training procedures --

15 MR. MICHELSON: I thought a check pilot had to be

16 familiar with the equipment that he was checking the person

17 out on.

18 MR. PENLAND: He has to be familiar with the

19 mechanics of the equipment, the systems of the equipment.

20 However, you're going to find that different airlines have

21 different procedures. And in the different procedures,

22 because of you coming in, the procedures in themselves, not

23 being familiar with them.

24 MR. MICHELSON: That answers that aspect of the

25 question. The other aspect is do you have any requirements

DAV/bc

1 concerning the possible relationship between the person
2 doing the checking and the pilot?
3 MR. PENLAND: In other words, the friends?
4 MR. MICHELSON: The area of the country that he's
5 doing his flying.
6 MR. PENLAND: We haven't found that to be
7 necessary. We usually have a ratio. We don't have a
8 minimum of five to 20 pilots.
9 MR. MICHELSON: No requirement concerning whether
10 or not they're a relative or a friend?
11 MR. PENLAND: That has never really posed a
12 problem. We've been fortunate. You know, here's your
13 problem. We check in so many different areas. For a
14 check airman to have a friend and pass one check, he's
15 riding with FAA inspectors and route spotchecks are being
16 conducted. Ramp checks are being conducted. This is one
17 small facet.
18 We're checking so many other areas of this. The
19 other aspect is, if he was a check airman giving a final
20 check, if the training program was effective, then there
21 wouldn't be any problem in the final evaluation. Say you've
22 got somebody else doing the training. Say you've got two
23 people possibly right there. In that one situation --
24 MR. MICHELSON: You're depending upon the fact
25 that there are large crews and who are not in contact with

1 each other except on a working basis.

2 MR. PENLAND: That plays a part in it. But even

3 your crews, chances are, if you're working for a company

4 over a long period of time and that the same check pilot

5 will give you a check more than once.

6 DR. KERR: So you're depending on the fact that

7 these guys have the right stuff.

8 MR. MICHELSON: Whatever. I'm just trying to

9 determine the similarity to the nuclear case where your

10 shift crews, to what extent do you want them checking each

11 other as opposed to the situation in the airlines.

12 MR. PENLAND: What we usually find is that if a

13 person is elevated to the level of check airman, generally,

14 that in itself is looked on quite highly as far as he is now

15 standard. On occasion, if he picked that up in a couple of

16 newspapers, there are a couple of airlines where there's

17 been a problem with the check airman concept. It's usually

18 identified quite quickly.

19 And, usually, one of the pilots within the system

20 themselves will call the agency.

21 MR. ETHERINGTON: The check airman qualifies as

22 an active pilot?

23 MR. PENLAND: He continues as an active pilot.

24 He's qualified to the same extent as the crew members and

25 he's flying the same equipment.

MR. ETHERINGTON: Is he checked also?

MR. PENLAND: He is in turn, yes. His check would generally be by the agency. When we talk about air crew program managers, one person has been designated for a company to provide the qualifications. And also in that area he is usually working only with one aircraft, maybe two at the most. Not very high diversification as far as equipment is concerned.

1 Now, those qualifications, of course, of that
2 individual who is to be designated as a checker, the fact
3 that he is representing the Agency or the company in essence
4 recommends him. Also, he is highly looked at by the Agency,
5 and usually his years of experience.
6 One of the other questions that came up is the
7 effectiveness of the system compared to other members of
8 recertification of the licensed pilot. There are no other
9 systems as such when we talk about a person at a given time
10 provides a check.
11 The only system, if you might want to think of it
12 as such, is, is it provided through a company or is it
13 provided through the Agency?
14 Whatever the check is, it will be given under the
15 same standards, and we have pretty exacting standards.
16 Whoever gives the check goes out and complies with those
17 standards, so that systematically it is just a matter of who
18 is actually performing the check, whether it is a
19 representative or the Agency.
20 Any questions there?
21 Yes, sir.
22 DR. SHEWMON: You said a man would only work
23 probably with one airplane.
24 Is the 747 one airplane, or is that stretch and
25 long range and other things? Are these separate?

DAVbur

1 MR. PENLAND: We have a system in place where we
2 issue what we call type ratings. A type rating, in essence,
3 is a qualification to perform and fly one particular
4 aircraft. That qualification, such as the 747, is one.
5 There is the SP, which is the sort of version
6 that you would have some system changes. There are always
7 updates and modifications taking place. He is expected to
8 remain proficient on those modifications.
9 Some aircraft, the 767, the 757, have been found
10 now to be so similar in nature that those two were put
11 together. If you are qualified on one, you are also
12 qualified on the other.
13 The next one is to what degrees are methods such
14 as examination by the FAA itself or the airline personnel
15 responsible for the training for the airline pilot?
16 I think we have gone around that one quite
17 effectively, but to recap it, the Agency at any time can
18 step in and do the check. Our requirements are the same.
19 We require the pilot to be qualified who is performing it,
20 as an FAA inspector.
21 That is an option we will leave open at any time
22 from the standpoint of inspections and spot inspections,
23 that we will step in and actually give the check if we want
24 to or monitor it. That is not unusual. Probably monitoring
25 is done more so than actually giving the check because we

DAVbur

1 have found over the years that we can perform a better
2 evaluation when we are sitting behind observing what is
3 taking place in the aircraft than the actual performance of
4 the check itself and manipulating the controls. You can
5 actually see two people and how they are interacting and
6 working together.
7 Okay. You asked if it is of particular interest
8 for us to know to what degree the FAA is directly or
9 indirectly involved in the licensing and recertification of
10 pilots.
11 I get the feeling that you were looking at a
12 percentage of how many of the checks we do as opposed to how
13 many checks are being conducted by industry. Those figures
14 are not readily available, and the reason being that we
15 don't keep track of that as such because many times those
16 checks are being observed.
17 In the observation of it, it is a separate system
18 of records that we keep. It can be gotten, but it has to go
19 down to each particular office, and it just wasn't available
20 within the time frame.
21 Although what we do do, we direct out of
22 headquarters or we have as work program guidelines. This is
23 a small little book that is provided the inspectors. This
24 one happens to be for operations.
25 Any time a particular function is taking place,

1 such as a certification, a type rating, it is annotated and
2 computerized and sent into the system.
3 The system is just now coming online. So it will
4 be available in the near future so you can readily check
5 it.
6 The inspections then, as we look at them through
7 the year, we find out what is happening in the system. Then
8 we go back out to what we call the work program. We may
9 indicate to the field that we want a minimum of 25 percent
10 of the inspections observed. Based on that, then they will
11 base their yearly work program on that and perform those
12 functions, and the guidelines versus the actual
13 accomplishment are put together at the end of the year to
14 see how they are accomplished.
15 An example of how this works -- and you may be
16 familiar with this, NATI -- NATI is another acronym. We
17 look at all our computer operators and all our 121 operators
18 of our larger aircraft, and looking at those operators,
19 identical inspections were conducted throughout the whole.
20 We went into a Phase 1 and Phase 2 and we found there was an
21 area we wanted to look deeper into, and they were given what
22 we call a Phase 2 inspection.
23 That information is now being used to determine
24 what we want to do as far as future inspections and changes
25 to our policies.

DAVbur

1 Another one that is currently ongoing and is
2 actually just about to be wrapped up is GASA. That was the
3 general aviation inspection, where we went out and did all
4 of our general aviation operators. That is one of the ways
5 in which we do find out where problem areas are and what we
6 should do to get into those areas.
7 To give you a feel for what might transpire
8 within operator main base inspections, which are conducted
9 on an annual basis, some base inspections where we look at
10 places where they land, line stations where they go in but
11 don't necessarily fuel or anything but passengers are
12 unloaded and offloaded.
13 Ramp checks is another form of inspection that we
14 are subject to on an annual basis.
15 Site inspections and training inspections.
16 So within that gamut, there is interest in four
17 or five areas where people performed an inspection on an
18 annual basis of a major carrier and looked at each part of
19 his operation.
20 Now, to kind of cover what happens with that
21 information, once that information is put together it is
22 sent to that principal operations inspector. So if you were
23 to take a good look at this, every inspector in the field at
24 some point may touch base with American Airlines. When he
25 finds something, he writes up a piece of paper, and it is

1 sent back to a focal point to the principal operations
2 inspector.
3 The principal operations inspector reviews all
4 that paperwork to ascertain if they were performing to the
5 standards everybody should be.
6 So a lot of people are looking at an airline, to
7 include the public, which is many times a source of
8 complaints and things that generate certain thoughts for us
9 to go into or certain areas where we should be looking.
10 Yes, sir?
11 MR. REED: So what I hear -- and I have heard it
12 before -- is that the FAA as an agency has performed since
13 1958 a very cooperative arrangement with the most skilled
14 people in and around the aircraft, be they designers, be
15 they pilots, be they whatever.
16 On the other hand, it seems to me that this
17 agency, the NRC, has gone to rather the opposite
18 arrangement, an adversarial type, where we don't take the
19 most skilled people, the people that have been licensed
20 nuclear plant operators, and put them out as inspectors.
21 So from your cooperative arrangement, I guess you
22 would feel that you elicit the best information, the best
23 flow, the best interchange, rather than in our case we might
24 not get the best exchanges where we send out people with
25 inspector stamps on their chests, to burden perhaps and

1 annoy the pilots, the mechanics, and so on.

2 And in this case I think the people we send out

3 don't have the right qualifications.

4 Could you comment on that?

5 MR. PENLAND: Let's see, it is going to snow this

6 afternoon.

7 (Laughter.)

8 MR. MICHELSON: It already is snowing.

9 MR. PENLAND: I will do my best. That was a

10 broad subject. Let me try to take that apart.

11 I got the feeling you were indicating something

12 that the inspectors who go out in the field are highly

13 qualified and as a result they are highly respected by the

14 people receiving them, and as a result it makes it easier to

15 perform either the check pilot or inspections or things that

16 occur on an everyday normal basis.

17 MR. WARD: In the course of answering, I have got

18 a couple specific questions.

19 MR. PENLAND: Any help is appreciated.

20 MR. WARD: You said that the check pilot position

21 or the check mechanic or designated rep are highly respected

22 and apparently sought after positions.

23 What are the incentives for a pilot to become a

24 check pilot or an engineer at Boeing to become a designated

25 rep?

DAVbur

MR. PENLAND: Usually the prestige. There can be additional money involved with it.

MR. WARD: How would there be additional money?

MR. PENLAND: The company may find through their contractual arrangements within the union that if you assume these positions, that there is additional funds available, travel, prestige associated with being one who does provide the checks.

Most of us in the field who have functioned for a period of time have assumed one of these roles. Also, it is career development, to move up within a company's structure. If you are trying to work with the Agency or become an Agency employee, it always helps to have been a check air pilot.

MR. WARD: How long are employees in that position?

MR. PENLAND: We don't have time limits associated with it. In some areas you actually charge the individual you are given the check to.

In other words, we started to establish a system years ago whereby if you were going to take an ATP check there would be a monetary value associated with it.

So there are pilots out there giving checks for the money that they charge the individuals receiving it.

MR. WARD: Are the officers of any major air

DAVbur

1 transport companies ex-check pilots?

2 MR. PENLAND: There are occasions, yes.

3 When you say "officers," you are talking about

4 presidents, vice presidents?

5 I couldn't answer that. I would be a little bit

6 amiss if I did. I might say that people who move up within

7 the structure sometimes assume these roles, whether they are

8 presidents or not, you know.

9 Iacocca could come over and become president of

10 American Airlines, but he might not even be a pilot.

11 MR. WARD: I am just trying to find out if it is

12 a pattern.

13 DR. REMICK: They might know of a former 747

14 captain who was an FAA check pilot becoming a vice

15 president.

16 MR. PENLAND: It could happen. I don't want to

17 draw a parallel that every check airman moves up in the

18 ranks in that manner.

19 MR. WARD: You know, with the acrimonious

20 relationship or the adversarial relationship that Glenn was

21 talking about, how can that be avoided between the noncheck

22 pilots and check pilots?

23 Mr. Siess just commented a few minutes ago that

24 his understanding of the way that is dealt with is the check

25 pilots don't have any friends.

1 Is that true?

2 MR. PENLAND: I don't believe that is true at

3 all. I was a check pilot for years in the industry before I

4 came with the Agency.

5 MR. WARD: Did you get your friends back yet?

6 (Laughter.)

7 MR. PENLAND: No problem at all.

8 What you find in most cases, if they have been

9 provided the training necessary there is no problem in the

10 checks.

11 We do have a percentage of failure rates. It can

12 be as high as 15 or 20 percent, depending on which company

13 it is, or it can go down as low as 1 percent.

14 Usually, if you look at the in-depth training

15 provided by the company, there is a check and balance

16 system. We are very much into training in the Agency. If

17 the training is good, the checks usually are no problem.

18 Only when you get into poor training do you find yourself

19 getting into a posture where the checks cause trouble.

20 MR. REED: Isn't it easier to respect the person

21 who has been in the trenches and walked the path and

22 demonstrated his ability than to respect a person who has

23 read a comment on a piece of paper who has never walked the

24 trenches?

25 MR. PENLAND: I think your comment speaks for

1 itself.

2 MR. EBERSOLE: Dave mentioned the Boeing

3 designated rep.

4 How do you rationalize the apparent conflict of

5 interest when this man who is an employee of Boeing finds a

6 place in the airplane which he considers to have

7 insufficient safety factors or whatever you are going to

8 find?

9 He goes back to the company and says you have got

10 to beef this up and make it more reliable, and the

11 company -- well, it certainly may not agree with that. It

12 would appear they would always be at odds.

13 How do you know that doesn't take place and

14 follow the career of such designated reps and find that they

15 really never make it anywhere in the company on account of

16 their just built-in needles to management?

17 MR. PENLAND: What you will find is that the

18 system provides enough avenues that this type of information

19 can be identified through the individual coming directly to

20 the Agency.

21 MR. EBERSOLE: We will be hearing some of this on

22 the rocket program now.

23 DR. SHEWMON: He doesn't have to go to the

24 management. He can go to the FAA.

25 MR. PENLAND: Well, let's look at the system.

1 The system allows us to check it at any time.

2 A call to the FAA inspectors will say, I think it

3 would be worth your time. He has a path whereby a call to

4 the inspector saying that I think maybe you ought to take a

5 look at a specific aspect of this engineering document. The

6 inspector comes down, and then of course the inspector finds

7 it and identifies it.

8 So there are avenues which you can use.

9 MR. WARD: But is the culture such that he really

10 wouldn't be considered a disloyal Boeing employee?

11 MR. PENLAND: No. We are in such a position out

12 there, I think the technical standards are such that

13 individuals recognizing deficiencies can identify them and

14 not be considered other than an employee with Boeing doing

15 the job the way they should.

16 This is not an area where you can be flag waving,

17 where I have found the deficiency and I am going to the

18 Agency.

19 MR. EBERSOLE: You know, with the Shuttle ring

20 question, the flavor this is coming out right now.

21 MR. PENLAND: There is probably a little bit more

22 than that, but I am prepared here to comment on that area.

23 MR. WARD: I think Harold and then Chet had

24 questions.

25 MR. ETHERINGTON: My question goes to

maintenance.

Can you say whether the designated maintenance man would be a mechanic doing the work or would he be a supervisor?

MR. PENLAND: When you say a supervisor, he could be a supervisor very easily in charge of and responsible for the people doing the work. The pilots are required to be line pilots, out flying. The maintenance people are qualified maintenance people.

In other words, they hold the certificates, they have passed the written examinations, they have taken the orals, they have demonstrated their proficiency to make judgment calls in the field, and they are highly recognized by the Agency.

DR. SIESS: I am back on the check pilot now. How many FAA people are involved in administering and overseeing how many check pilots and how many pilots?

MR. PENLAND: In other words, you are asking for one inspector, how many people would he be monitoring?

DR. SIESS: How many FAA in the total group, in administration and overseeing?

MR. PENLAND: You are asking about the total number of employees the Agency has then?

MR. WARD: Let me try to ask it -- there are X number of pilots in the major trunk airlines. There are Y

DAVbur

1 number of those who are check pilots, and then there is Z,
2 which is the number of FAA employees who are involved in
3 that program?
4 MR. PENLAND: What will happen here, rather than
5 give you a number, let me tell you how we systematically
6 approach it.
7 You have the major carrier that has 300
8 aircraft. With the 300 aircraft, they have, say, 10
9 different types. With 10 different types, one inspector
10 cannot maintain generally more than two specific ratings,
11 type ratings.
12 DR. SIESS: By inspector, that is FAA?
13 MR. PENLAND: Correct, because we only keep our
14 inspectors proficient on two aircraft at a time. In other
15 words, we limit the number they are supposed to be
16 knowledgeable on and that they are currently or continually
17 taking training on.
18 So now what you have is a position where we have
19 ACIs, air carrier inspectors, that are specific to an
20 aircraft. That company might need two, three, four, five
21 ACIs in order to cover all the aircraft that company has
22 because each aircraft is unique and he cannot maintain
23 proficiency on all the different ones.
24 Now, this entity of people, whatever that number
25 may be, will be talking to the principal inspector, the

principal operations inspector. He will be making the judgment call.

So throughout the whole of the United States, let's say that we have 20 or 30 747 FAA-qualified people that are constantly giving check rides. They may be working and looking at several different companies performing those functions and may sign a certain number of those companies.

DR. SIESS: So a company that had 10 different aircraft there are five inspectors. Those five inspectors would not necessarily be full time on that company?

MR. PENLAND: They might not. They might have several other companies they are responsible for.

DR. SIESS: Of that company, how many pilots would be involved, with how many checks?

MR. PENLAND: That is where I can't give you a number. There could be anywhere from 10,000 down to as little as 20.

But whatever the number of pilots is, the supply and demand automatically takes care of itself because we designate that you will do 25 percent of the inspections. When you figure out those numbers -- or 10 percent or whatever the work program for that particular year indicates is necessary for that company -- whatever that number comes out. Then if you have to get additional support from within the region or outside of the regional boundaries, you

DAVbur

will be provided the people to perform those checks.

DR. SIESS: Let me pursue it just a little further.

How many pilots are there in the U.S.

DR. LEWIS: 733,000.

MR. WARD: We need trunk airline pilots.

DR. LEWIS: There are 75,000 ATRs, if that will help.

MR. PENLAND: But not all ATR pilots are flying.

DR. LEWIS: I understand that.

DR. SIESS: How many inspectors do you have?

MR. PENLAND: Current inspectors looking in the field, right now it's up around 2000. We ar getting another 500.

DR. SIESS: 2500 inspectors. This is about 75,000.

DR. LEWIS: 75,000 ATRs, but there are 2000 large aircraft, aren't there, approximately?

MR. PENLAND: 2500, 2600.

DR. LEWIS: So multiple that by 5 to get the number of pilots, very roughly.

MR. ETHERINGTON: Don't they have to accommodate two extra pilots and a check pilot?

MR. PENLAND: Many times, if it is a company check pilot, that is the right seat, which is normally occupied by the copilot is occupied by the check pilot. The FAA inspector only requires one seat in the cockpit, is required for our purposes that he can fly on at any time. Some of the airplanes, the DC has two seats, and that is built into our regulations. At any time, if we want to

DAVbw

1 utilize that seat, we just advise the airline and the pilot
2 himself cannot actually refuse us, unless it is for some
3 specific problem, and emergency or something of that
4 nature.
5 Yes, sir.
6 MR. EBERSOLE: In the matter of reworking and
7 maintenance, is it prohibited that a shade tree type
8 mechanic can do the work hands on, as long as he is
9 supervised.
10 MR. PENLAND: The use of the term "shade tree,"
11 first of all, I think we have to go to a higher level. The
12 company is responsible.
13 MR. EBERSOLE: You have to have formalized
14 training by every man that lays his hand on the airplane?
15 MR. PENLAND: The company is responsible for the
16 maintenance program. That outlines the qualifications
17 and type of training.
18 MR. EBERSOLE: The company.
19 MR. PENLAND: Yes. The company is certificated.
20 Our internal regulatory structure is such that a certificate
21 is issued to a company person, as such. Then the company is
22 responsible for providing this type of training to the
23 individual. That way we have a means of going back, a
24 recourse to action, if they are not performing
25 satisfactorily.

DAVbw

1 MR. EBERSOLE: but it is open-ended, as to what
2 employees.
3 MR. PENLAND: When you say it is open ended, all
4 that comes under the purview of the maintenance inspector,
5 and there is a regulatory definition of what is acceptable,
6 what's not acceptable and how many hours of training, and
7 how it will be performed. These are all programs that are
8 reviewed all the way up and down the line, and why we go
9 down to that individual person in the field, there is no way
10 you or I here can make a determination on what level the
11 maintenance should be performed by a certain career, based
12 on their equipment. That individual, that is his
13 responsibility.
14 We can make broad-brush policy statements, so we
15 take that level of responsibility down to the individual
16 maintenance inspector for the company. He then assures that
17 that program meets all the regulatory requirements.
18 MR. EBERSOLE: The formalism stops, however, with
19 the certified mechanic.
20 MR. PENLAND: The mechanic is the lowest level of
21 somebody working the airplane is your question; correct?
22 Not necessarily. He could be less than an ANT
23 and still work on as airplane. The basis that will occur
24 there is that the maintenance program may be such that they
25 have programs for training people. That once people go

through a training program, they get qualifications to assume those responsibilities. Those will come through in another segment, which will be called approved maintenance programs.

MR. WARD: Are there any other questions of Mr. Penland?

(No response.)

MR. WARD: Thank you very much. It was very informative.

MR. PENLAND: Thank you.

MR. WARD: Our next speaker, Mr. John Griffin. Mr. Griffin is from Arkansas Power & Light. I guess it is the Nuclear Vice President, John?

MR. GRIFFIN: You can always tell when an executive steps up, he can't tell the difference between a light and a microphone.

(Laughter.)

MR. GRIFFIN: My name is John Griffin, Senior Vice President for Energy Supply for Arkansas Power & Light Company. I have responsibility for the nuclear units, as well as all of our fossil generating facilities. I am also on the steering committee for NUMARC. As part of that responsibility I was designated, as the chairman for Working Group No. 11, which was to address the operator requalification issue.

DAVbw

1 I hate to start my presentation by taking
2 disagreement with anybody in the room, especially the
3 Chairman, but I would like to clarify a few statements that
4 Mr. Ward made at the beginning.
5 When Working Group 11 was established back in the
6 late summer or early fall of last year, our assignment was
7 to specifically deal with the operator requalification
8 issue, and we recognized at that time, or felt at that time,
9 the check operator, even though it was being discussed in a
10 number of cases in the same sense and in the same light with
11 requalification, we felt there was a marked difference
12 between the two. So my group opted to address the operator
13 requalification issue, recognizing that the check operator
14 was one of the possible solutions to resolving those
15 problems.
16 That is the approach that we've been going after
17 in this issue and the path that we continue to follow.
18 I think Bruce Kenyon this morning in his
19 discussion on the access authorization gave you a brief
20 overview of how the NUMARC process works. Where a problem
21 is identified, such as requalification in this case, where a
22 working group is established, where they determine the
23 problem and evaluate possible solutions, recommend solutions
24 to the Steering Committee, the Steering Committee then votes
25 and, if appropriate, takes it to the full Executive

DAVbw

1 Committee for approval. Then and only then, can that become
2 a NUMARC position.
3 In answer to Mr. Reed's earlier question about
4 responding to the Commissions on the check operator concept
5 that came up last year, we have a meeting scheduled with the
6 Commissioners on the 2nd and the 26th of this month and
7 operator requalification and the check operator will be
8 discussed, but only in the intent, basically, of a progress
9 report on where we have gone today and where we see the
10 issue is taking us in the future.
11 We don't envision that we're going to bring that
12 question to termination in the very near future at least.
13 I guess what I was getting around to saying is
14 that I can't stand before you today and give you a NUMARC
15 position on operator requalification or check operators.
16 But what I think we can do today is to give you
17 our individual perspectives of the check operator approach,
18 as was presented by Bruce Boger this morning, describe to
19 you at least how two utilities are presented incorporating
20 portions of the check operator concept into their
21 requalification efforts and also to answer some of the
22 questions that you provided to us in the January 28th
23 letter.
24 Incidentally, in responding to those specific
25 questions, we did not just stay within our own utilities.

1 Each of us made a number of contacts with counterparts and
2 peers throughout the industry, so some of the comments that
3 we have are going to be reflective of more than just the
4 individuals who are in this room.
5 Although I did what most utility executives would
6 do when making presentations is delegate those
7 responsibilities. I am going to prove that is true in
8 theory again again.
9 Our first speak is Dave Kruden, Manager of
10 Nuclear Operations for Virginia Power. Dave's part on the
11 agenda is to present and discuss a pilot check operator
12 program that Virginia Power is in the process of
13 implementing.
14 (Slide.)
15 DR. MOELLER: Excuse me. When you say that we
16 are going to hear about a program you are implementing, is
17 this on a trial basis?
18 MR. KRUDEN: Yes, sir, it is on a trial basis.
19 My name is Dave Kruden. I am the Manager of
20 Nuclear Operations at Virginia Power.
21 For just a little more on my background, I spent
22 a career in the United States Navy, and I have been in the
23 commercial nuclear power business for a little less than two
24 years, to tell you the truth. At Virginia Power, we have
25 two two-unit sites, one at North Anna and one at Surry, and

DAVbw

they are both Westinghouse pressurized water reactors.

(Slide.)

With the recent discussions on check operator, my Vice President of Nuclear Operations and I discussed the pros and cons of check operator program. We are talking strictly within the company itself, and we decided that we would try a program -- it is in the embryonic stages at this point -- and the whole idea is to enhance our qualification of our nuclear operators. We have a good program now. Our operation program, our training program has been certified by INPO, and we are doing all right, but we felt that possibly something along this line might help us.

(Slide.)

The idea is to have a check operator at each site, a man who would perform operational evaluations of our reactor operators and senior reactor operators and do that both in the simulator atmosphere under normal and abnormal conditions, have some input into their qualification examinations, both written and oral and also be an evaluator of the training they were receiving and the trainers themselves. It would be an ongoing program, in that in our vision of this, we would have the check operator continue to stand watches on shift, be an active shift supervisor, standing possibly one week out of four, and in doing that,

DAVbw

he would be standing with different shifts each time and be able to observe and oversee the different shifts on their shift duties.

I guess in some ways we feel that maybe even more beneficial than seeing them in the training atmosphere.

MR. WARD: Would he be there in place of one of the SROs or in addition to?

MR. KRUDEN: I think probably in place of one of the SROs. He would be conducting the shift. We also thought he would be valuable in preparing or at least evaluating our RO and SRO licensee candidates, while they were in their training phase, in some capacity.

We have an INPO peer evaluation program now, where we contribute a reactor operator or senior reactor operator periodically to INPO to go on their visits to examine other utilities. We thought this gentleman might be particularly good as a candidate for that particular duty, and we thought to give this gent the prestige he required, that we would have him report directly to the station manager.

(Slide.)

We haven't picked our check operators yet. We put down some qualifications that we feel are essential, sort of minimum. It certainly would have a current SRO license, 25 months experience, at least, as shift

1 supervisor, certain high minimums on his requalification
2 exams with the NRC, have excellent or outstanding appraisals
3 in our own internal appraisal system. We'd want a gent who
4 is strongly committed to excellent and professionalism,
5 somebody who would stand up, you know, above the crowd, the
6 "white knight" of the organization, who would be respected,
7 not only for his technical expertise, but for his personal
8 qualities of integrity, high standards, his ability to work
9 with people, you know, be respected, 360 degrees.
10 And we are contemplating ome training workshops
11 to put him through. We'd probably put him through the
12 simulator instructor training course that we have, some
13 testing and evaluation skills training, some observational
14 skills training, and we'll do that in coordination with
15 INPO, who has a course for their own people, who go out and
16 evaluate the various utilities, and possibly even in
17 coordination with the NRC, may be able to give some NRC
18 licensing examination type of training.
19 (Slide.)
20 This shows you that we are not very far along.
21 We are putting the position titles and descriptions together
22 right now. The plant managers are making up a candidate's
23 list for the vice president to discuss with them, and he
24 will be the final selector of whoever 't is we pick.
25 Yes, sir.

DAVbw

1 DR. SHEWMON: How many are you talking about in
2 the system per site?
3 MR. KRUDEN: We are talking about one per site at
4 this time. We hope to complete their initial training by
5 the end of June and have it incorporated by this fall. And
6 we will sort of work the program as we go along and attempt
7 to improve on it. As you see, it is quite a bit different
8 from the program the FAA talked about. We are talking
9 strictly in-house. We are talking the Surry qualified
10 individual will do his work at Surry, and the North Anna
11 individual will do his work at North Anna.
12 MR. ETHERINGTON: Do you see a problem having
13 this person report to the station manager?
14 MR. KRUDEN: No, sir.
15 MR. ETHERINGTON: I would think he would have to
16 report to the shift supervisor.
17 MR. KRUDEN: On his normal shift duties, there
18 would be the normal relationships, but --
19 MR. ETHERINGTON: But he is not on a shift.
20 MR. KRUDEN: He is not on shift, and in his chekc
21 operator role, he would report directly to the plant
22 manager.
23 Yes, sir.
24 DR. REMICK: Two questions. Would he have any
25 function in administering the written requalification exam?

DAVbw

MR. KRUDEN: I am not sure, as far as administering. We don't look on this gent as sort of a trainer or administrator, but we look on him as an evaluator, and I think we would probably use him in reviewing our examinations prior to administration, and maybe even evaluating or helping evaluate, you know, the examinations after they had been taken.

DR. REMICK: Would he administer any part of the recall, or is he just an observer of the overall process?

MR. KRUDEN: I am not real sure yet either, but I think at least initially, an overall observer, an overall evaluator would certainly have enough authority to go to the plant manager and say, listen, this particular shift, I think they need additional training in this or that, or even down to the individual. But do both, you know, evaluate both the crew as a crew and individuals as individuals, both in their operational performance, their examination performance, maybe even oral.

I could see where we might get to the point where he might pull somebody aside and give them an oral examination or what would amount to an oral examination, just to probe into something he might have seen on shift or might have seen in the simultor.

DR. REMICK: He himself would be seeing his requalification exams from whoever in the organization would

DAVbw

be doing that.

MR. KRUDEN: As a matter of fact, I suppose if it worked out real well and the results were overwhelming to everyboedy who would want to see that this is a very effective program, then we might suggest to the NRC instead of examining all our people periodically, on should concentrate on him.

MR. EBERSOLE: How many such people? At what plants do these people function?

MR. KRUDEN: We have about 40 licensed operators at each of our sites.

MR. EBERSOLE: Where are your sites?

MR. KRUDEN: Two sites. North Anna and Surry.

MR. WARD: Some of the duties of this person might seem to be things that might normally be the duty perhaps of the operations superintendant, or somebody in that role.

Do you see a conflict there? This program is advanced enough. I'm sure your operations people have been involved in the development. Would they have any problem with it? Do they see it as undercutting their role? Their responsibility?

MR. KRUDEN: No. In fact, I think, from my conversations with them, they're quite supportive. It would be helpful to them.

DR. REMICK: Just another question. It seems...I don't want to quibble on words, but to call this person a check operator, isn't he really kind of a chief operator? Or a senior, senior operator? I was curious why you chose the "check operator".

MR. KRUDEN: I think it has some parallels to the check pilot program. And I guess that's why we called it

1 check operator.

2 DR. REMICK: I think that's very interesting.

3 Thank you very much.

4 MR. WARD: Thank you, Mr. Kruden.

5 MR. GRIFFIN: Bill Stuart, who is the Vice

6 President of Nuclear Operations for Virginia Power, is also

7 on working group number 11 with me. In fact, when he heard

8 about this discussion today, we had talked and he offered

9 the opportunity to present this discussion on how Virginia

10 Power intends to proceed.

11 Of course, not only as part of working group 11,

12 but I think a number of other utilities throughout the

13 country are going to be extremely interested in following

14 the progress of how this program proceeds, both strengths

15 and weaknesses.

16 The next person...yes, sir?

17 MR. REED: If this is to go the full road of a

18 pilot program and then on to a program that the NRC would

19 pick up on, and there would become this interfacing between

20 the check operator and the NRC, which could circumvent the

21 total authority of the vice president in charge, do you

22 think Virginia Power would be concerned about that?

23 MR. KRUDEN: To circumvent the vice president?

24 MR. REED: If you get a check operator and they

25 become recognized as designated persons and they can

1 interface directly with the NRC and pick up the phone and
2 say I think there's a problem here at Virginia, will this
3 bother the top management of Virginia Power?
4 MR. KRUDEN: That would bother them and I hope
5 that I didn't suggest that that might happen. When I said
6 there might be an interface between the check operator and
7 NRC, I was thinking from the standpoint of the NRC checking
8 our program periodically. To some extent, they would probe
9 our check operators rather than probing all our operators,
10 periodically.
11 I mean, it's a lot of pressure there on our
12 operators. Well, it will be talked about.
13 MR. GRIFFIN: Let me just address that. If that
14 happened in my situation, I would be very upset I think for
15 two reasons. One is because, and I think we talked about it
16 earlier, someplace on the side of the room we have an
17 adversarial relationship that presently exists between the
18 NRC and the utilities that is significantly different than
19 exists apparently between the airline industry and the FAA.
20 Somebody going to the FAA with a problem
21 apparently does not have that onus or that negative
22 connotation. I think that a check operator going to the NRC
23 would immediately ruin his credibility with his peers and
24 any chance of keeping him on a pedestal, which I think is
25 very, very crucial if that program is successful, that

would be gone. That's my impression with the present attitude and environment that exists between the regulated utilities and the NRC today.

MR. REED: Well, I have perceived for some time that the utility endorsement or their attitude toward a check operator or designated person in the program is related to just what you've said.

The top management, perhaps nonnuclear entirely, would see a designated representative program as a threat to their total authority. And I've always felt damned well and good. Maybe there should be a threat to their total authority. I think we're moving into a new era of management and business and technology, and that not all the decisions should be made by top management in ignorance.

DR. SHEWMON: Lose part of what?

MR. REED: With respect to genuine flying of the airplane.

DR. SHEWMON: That doesn't help me at all. Who is ignorant of what?

MR. REED: I wouldn't say that top management, I don't think, in many cases, can make as good a decision about some issues as the designated representative.

DR. SHEWMON: Better to keep them in the dark than go around them.

MR. REED: No, better to have an avenue for the

DAV/bc

1 designated representative to make his input and make himself
2 felt.
3 Now, I really think the utilities probably have
4 this negative hangup, now recognize that the NRC structure
5 has existed for a long while. It's become very adversarial
6 and all it does it get bigger and bigger and bigger and more
7 and more all the time, without the welfare problem, the
8 nuclear problem. It almost seems to me that the top
9 executives of nuclear should rethink this thing.
10 MR. WARD: There are different points of view.
11 But I think Mr. Griffin expressed it well, that there's a
12 different culture, this isn't something that can happen by
13 edict. I guess it's got to be discussed for some time.
14 MR. GRIFFIN: If I could just...I certainly don't
15 want to give the impression that we object to it, or that I
16 was objecting to it or had a concern about that process
17 because it was somehow going to undercut my authority or my
18 input. That's furthest from my mind.
19 What I was concerned about was that if that
20 happened, it was going to destroy the effectiveness of the
21 check operator program as we envision it could be
22 implemented within a utility.
23 I think what we're trying to show you today is
24 that we're not directly opposed to the concepts that are
25 behind the check operator approach. In fact, some of the

DAV/bc

1 utilities already have programs that have endorsed
2 wholeheartedly the check operator concept.
3 MR. WARD: Wait a minute though. There's a very
4 vital difference between the sort of concept that Mr. Kruden
5 just presented and the sort of thing that I think Glenn is
6 talking about, and the sort of thing that the FAA has. In
7 the FAA case, the check or the designated representative is
8 an agent of the regulatory agency.
9 The sort of thing Mr. Kruden describes, the check
10 operator or chief operator is not in any way going to be an
11 agent of the NRC.
12 I think those are fundamentally different
13 things.
14 MR. GRIFFIN: But my impression of the need for a
15 check operator concept, whether it's in the airline industry
16 or our industry, or any other industry, is to get an
17 independent -- that's a key word -- an independent
18 evaluation of two aspects: the credibility of the operator
19 and the effectiveness of the training program.
20 Now, in my opinion, you can do that four, five,
21 six, ten, a hundred different ways. And that was the issue
22 I was trying to address. We need to look at what the intent
23 of the program is and then try to find the best way to get
24 that intent accomplished.
25 I don't happen to believe that what the staff has

DAV/bc

1 proposed is the best way to do that. That's what we're
2 trying to show today, that there is more than one way to
3 skin a cat. And we're going to try to show you the second
4 way right now.
5 I've asked Jimmy Vandergriff, who is the training
6 manager at Arkansas Nuclear I, Arkansas Power and Light
7 Company, to describe the recall program that we presently
8 use, and which also, we believe, accomplishes a number of
9 the concepts of the check operator program.
10 MR. VANDERGRIFF: Thank you, John. As John said,
11 I'm Jim Vandergriff, the training manager at Arkansas
12 Nuclear I. I'll just give you a little bit of my
13 background. I've been in the commercial nuclear industry
14 since 1970 as a shift supervisor on the B&W unit and the
15 combustion engineering units. I have SRO licenses on both
16 of those, so I'm speaking somewhat from those experiences as
17 well as my experience as a training manager.
18 We at Arkansas Nuclear I have implemented an
19 operator training program and we have had our problems with
20 requalification in the past. I feel that we have evolved
21 with respect to our requalification and that we have a good
22 handle on who our operators are, where they're at, including
23 their credibility and their performance and their meeting
24 the standards -- the NRC standards, of ours, or what.
25 In contrast to what Dave said with his check

DAV/bc

1 operator program, I feel like we have essentially the
2 elements of that type of program built into the
3 requalification, but under a little bit different
4 structure. And it is all inhouse.
5 Since their requalification program is such that
6 all licensed people, whether on shift or off shift, attend
7 the requalification lecture series. They attend seminar
8 training. They complete all the reactivity. The stand
9 watches on shift and they also are subject to evaluations
10 and the evaluations that they receive include written weekly
11 examinations. They include annual written examinations and
12 annual oral examinations, which, in concept, is like what
13 the check operator would be doing.
14 We use different people in different ways in
15 doing this particular evaluation. In doing the check
16 operator type of evaluation with the individuals, we
17 designate either senior training people or operations
18 management people as the designated people to perform the
19 examinations. And using the structured format. Then
20 conduct those examinations.
21 The results of that are compiled and we take
22 whatever necessary actions with that. We presently, the
23 first of this year, we operationalized our first low scope
24 simulator. With the advent of that simulator, we have a
25 program evaluating team performance as well as individual

DAV/bc

1 performance, with the same type of concept but with a senior
2 operations person and a senior training person, SRO licensed
3 shift supervisor, management positions to perform as an
4 evaluating team that would evaluate the crew with respect to
5 their performance to the communication links.
6 The appearance of the senior people and that sort
7 of thing, and then an individual evaluation of the senior
8 operators. And we feel like, in combining that type of
9 thing, we do in fact achieve the objectives. So that what I
10 think the check operator program is really aiming for is
11 good objective assessment, independent assessment -- I
12 should say, free of this conflict of interest -- so that we
13 in the utility and also the public can be assured that the
14 people we do have operating have in fact met the standards
15 that have been established, and have demonstrated that
16 through proficiency and through evaluation.
17 DR. REMICK: Jimmy, I agree with what you're
18 saying. The standard requal setup I think you just
19 described at ANO is consistent with the check operator
20 proposal.
21 But I think the ordinary thing that it lacks is
22 the touching of the wand that we just heard in the case of
23 Virginia Power, the White Knight taking somebody and putting
24 them up on that pedestal and he would be the one who would
25 hopefully stress the professionalism and the search for

excellence, and so forth, and is recognized by the company. That's one aspect you don't have.

I was wondering, that's one thing that might be appealing about the check operator concept, to enhance professionalism and people seeking that prestige.

MR. VANDERGRIFF: The point is well-taken. We see that. I think that would be something that would be positive. The people that we select to perform in this role essentially are, as I said, senior people and really the role they have with respect to the evaluation of the other people is not really peer to peer. We view it more as superior to subordinate type of thing.

In that sense, I think they're already placed somewhat on a pedestal. They are speaking from the standpoint that these are the management standards that are expected of you in performing your particular function. And I don't think that they are viewed by the people that examine in a negative light whatsoever. In fact, I think they're looked up to.

DR. REMICK: Not negative. I guess they have respect for the fact that they've met the qualifications, but they aren't necessarily this White Knight.

MR. VANDERGRIFF: Hopefully, we can make them all White Knights.

MR. GRIFFIN: The last portion of the

DAV/bc

1 presentation that we would like to go through today is by
2 Jack Woodard. Jack is the General Manager of the Farley
3 Nuclear Station at Alabama Power Company.
4 What I've asked Jack to address is the concerns
5 that we believe exist with the check operator program as
6 proposed by staff and also to provide his prospective on the
7 nine questions that were posed by ACRS in the letter of
8 January 28th to me.
9 Jack...
10 MR. WOODARD: Thank you for this opportunity to
11 present comments concerning the proposed check operator
12 program. It really is an opportunity for somebody who
13 operates a two-unit pressurized water reactor in a peanut
14 field in South Alabama to come and talk to you again.
15 I was here once before in 1977 and it was a real
16 knee-knocking experience. We were trying to get our
17 license. I felt like that Alabama Power Company wouldn't
18 make it if I didn't make it through my speech. So did about
19 50 other people...but that was quite exciting.
20 I'm excited about this. I don't get to do this
21 kind of thing very often. I have only a few minutes and I
22 feel like I need a few hours to express my deep concerns and
23 skepticism about the check operator program. I base these
24 remarks on discussions with other plant managers, interviews
25 with licensed operators, shift foremen, shift supervisors

1 and 15 years experience at the Farley Nuclear Plant, the
2 last 10 of which I've maintained a current SRO license.
3 I'd like to state my position based on the work
4 that I've done on this. Then I'd like to go and address the
5 questions. And then I'd like to conclude by going back and
6 giving you a final statement. That's my position.
7 The check operator concept discussed here today
8 does not parallel the FAA check operator program. And if
9 implemented, would not be effective in achieving the desired
10 objectives. The basic reason that it would not work is
11 because of the many differences between plants of the same
12 type -- just as the FAA guy described to you today -- as
13 well as the institutional differences in our society.
14 What are the differences?
15 You could talk about them all day. There are
16 differences in design, number of loops, number of steam
17 generators, control systems -- you can go on and on and on.
18 And I'm talking about with a PWR organization. There are
19 vast differences in normal emergency on call organizations
20 as well as responsibilities of each person in the
21 organization.
22 A given operator position at one plant doesn't do
23 the same job as an operator in another plant. It doesn't
24 mean that the jobs aren't getting done. They're just
25 divided up differently. And in one unit, the shift foreman

is the control room commander. In another unit, he's called an operating engineer or a shift supervisor. And duties can overlap. Procedures are different from plant to plant, both administrative, operating and emergency. Technical specifications are different.

MR. REED: I thought the present NRC concept was that the check operator that would be at the facility would be a member of the organization at the facility. Where is the check operator going to exist?

MR. WOODARD: Thank you for asking that. I'm talking about a check operator as proposed in all the written material that I reviewed prior to coming here, which has to do with having a national group of check operators that do not do it on their plant but do it on other people's types of plants.

MR. REED: I can understand if that is the way it's presented.

MR. WOODARD: That is the way it is presented in most of the documentation that exists today.

DR. SHEWMON: But the documentation that exists is a SECY paper of a year ago?

MR. WOODARD: Yes.

DR. REMICK: So your criticism is based on that policy?

MR. WOODARD: I'm saying it does not parallel the

DAV/bc

1 FAA program because of these differences.

2 DR. REMICK: Somewhere along the line, would you

3 point out if you would favor the concept if it was different

4 than that proposal?

5 MR. WOODARD: Yes, sir, I will get to that.

6 There are also vast differences in emergency

7 planning. I don't think anyone has any two emergency plans

8 that are alike due to the state environments they're in.

9 Institutional differences are very important. Those have to

10 do with the relationship of INPO.

11 You know, in the airline business, I know of no

12 organization that parallels INPO. Other institutional

13 differences are, you know, if you could parallel the FAA to

14 the NRC, I think some people would say that the FAA is a

15 proponent of the airline business; whereas, others view the

16 NRC is an adversary of the nuclear business. It may or may

17 not be true but that is in fact how it's perceived by many.

18 What are the consequences if we were to do it

19 anyway? Should the check operator program be

20 inappropriately imposed on the industry? Meaning, as I view

21 it, being an external type organization. We would simply

22 have more of the same problems that we now have with NRC

23 administered examinations.

24 At this point, I would like to go to the

25 questions that you asked and answer these questions, based

DAV/bc

on this position.

Let's assume we did have a check operator program. The first question that is asked is: what does industry envision as the essential elements of the check operator program?

My answer to that is the check operator must have the following qualifications on the facility under examination:

Number one, an SRO license on that facility.

Number two, two years experience on shift.

Number three, he must be current on requalification. That is a major issue with me.

A fellow who held a license and it was valid a year ago, he is no longer valid to do something like this. There are too many changes. We implemented over 100 design changes in each unit last year. Things are changing too fast and for the most part for the better. Many improvements are being made.

Fourth, he must be trained and certified in the conduct and documentation of performance-based examinations.

Performance-based examinations, that is the result of this job and task analysis and having the systems approach to training, which gives you valid objectives that you can examine against.

Further, he needs to have some kind of training

DAVbur

in human relations in that he can get next to a guy and not change the way the guy performs because of his presence, but get him to perform like he would normally perform.

Last, he must be a top performer.

DR. KERR: I would have thought that you wanted him to be such that he would scare the guy half to death so that he would find out how he operated under stress.

(Laughter.)

MR. WOODARD: I find from my point of view that an auditor or an examiner will frighten an operator much more than a severe plant transient.

(Laughter.)

And I really mean that.

While we are at this point, I think this is an excellent place to tell you how Farley Nuclear Plant conducts their requal program. I think that is a good time to do that.

We have 10 instructors in our training department in operations. All of them have SRO licenses. Eight of the 10 have served several years as a licensed shift supervisor, shift foreman, or plant operator. The other two have SROs and Navy experience. Two or three of the 10 have actually been shift supervisors.

Another thing we do is we rotate two people off shift into training for a two-year assignment and then

1 rotate them back to the shift. That keeps your training and
2 your operations united. You don't have "high on the hill"
3 people and "down in the valley" people, whichever way you
4 might view that. But they are all going the same way, okay?
5 I think that is very important.
6 Right now we have one shift supervisor who has
7 like eight years experience. With us he has been a shift
8 supervisor about four. And the other one is a shift
9 foreman. He has been a shift foreman for a year or so, and
10 he has been an operator for several years.
11 They are in our training program, and in two
12 years they will be rotated back to the shift.
13 The second thing: how do we conduct the requal
14 exam?
15 Well, you go to requal for a week, and on the
16 fifth day your instructor doesn't give you your exam
17 although he does write up the most comprehensive evaluation
18 of your performance during the week. But an independent
19 third person comes in, another examiner, SRO type, and gives
20 you the exam.
21 Yes, sir.
22 DR. SHEWMON: Is he one of those 10 instructors?
23 MR. WOODARD: Yes, sir.
24 DR. SHEWMON: A different instructor?
25 MR. WOODARD: Yes, sir. You might not think they

DAVbur

take that to heart.

Independence has been a good topic of discussion today, but let me tell you what happened in mine this year. I did real well during the week, much better than I ever had in the ones in the past. When I got down to doing my SRO exam on the fifth day, they sent in the third guy here, and my instructor went up in the booth, like they do, and they observed the examination.

And I looked over and I says, I need to make an adjustment on this MA station on charging and let-down or seal injection or something. This isn't even part of the test, okay, and I went over and I am fiddling with the thing. Well, I got it all screwed up, and I got the charging and let-down system in a mess. It wasn't unsafe, but I didn't operate the MA station too good.

So I got rated unsound on handling controllers. It was a minor part of the exam, but I understand that my weekly examiner was in the booth beating on the desk, saying that jerk did it right all week and now he picks this time to screw up.

(Laughter.)

MR. WOODARD: What is my point? It is a minor example, but the point is that man really took this to heart. He was interested in my performance because he had been responsible for it and that was a reflection on his

DAVbur

1 program.

2 So I think this is a valid approach and it is

3 different than the approach taken by the man from Virginia

4 Power, yet it does have some independence in it.

5 This is the reason I think the man has to be

6 facility certified, licensed, and experienced.

7 Are there any questions about the question?

8 DR. REMICK: I have one. I guess I don't quite

9 understand, though, everything you said. I forget, you said

10 there should be people who conduct your requal exam, there

11 should be check operators who should be SRO licensed, at

12 least two years of actual experience, and should be up to

13 date on the requalification exam, and so forth.

14 All are things I agree with, but they wouldn't be

15 the requirements for a check operator that is --

16 DR. KERR: He said up to date on that facility,

17 Forrest.

18 DR. REMICK: Yes, those are all things that I

19 could buy on a check operator.

20 DR. KERR: But how is somebody who has been over

21 at North Carolina's Brunswick plant or something going to

22 be up to date on this plant?

23 DR. REMICK: Virginia is going to have it. The

24 Surry people will do the Surry exams and North Anna. That

25 is what I am thinking of. I have always thought that. I

DAVbur

1 am never one of those who felt there should be somebody from
2 another utility.
3 But the question I would ask: which would you
4 prefer if you had your druthers; that is, the NRC
5 administration of those requal exams or to have one of
6 these -- presumably one of these 10 people or somebody else
7 at your plant or more than one designated as the person who
8 will conduct the requal exam?
9 Basically, that is what it boils down to. I
10 don't agree necessarily with the SECY document. I don't
11 think it resolves all the points. We could have a
12 discussion of different aspects, but I think it boils down
13 to which would industry prefer -- NRC-administered requal
14 exams -- or the utilities say we want 100 percent of those;
15 the staff says we don't have the resources, so they do 20
16 percent of 50 percent of the facilities.
17 Would you prefer that, or would you prefer that
18 it be an industry administered type of thing and perhaps
19 just one of those options that they be individually
20 conducted by somebody called a check operator?
21 I think that is what the question boils down to.
22 MR. WOODARD: There is really three issues here.
23 Number one, do I believe the NRC should continue requal
24 exams?
25 My answer to that is no, absolutely no, for a

1 long list of reasons, which I am prepared to go into.

2 But accepting that, I am against the NRC being

3 actively involved in requal exams because they can't

4 accomplish their stated objective that way. They can

5 accomplish that same objective by sending a person in to

6 audit who is knowledgeable, okay, and has valid criteria for

7 his audit. He can audit our people and administer exams and

8 do a good job of validating what kind of program we have.

9 He can do the best job much better than if he tried to check

10 the man himself.

11 Secondly, would I like to have a check operator

12 program?

13 My answer is: as a requal exam, my answer is I

14 already have it.

15 Now, I don't want to do away with the evaluation

16 that the weeklong examiner does because that is your very

17 best evaluation of that person. Okay.

18 Now, what is the very best evaluation of the

19 program?

20 It is the guy that comes in independently and

21 gives the exam. It is the least valid way to evaluate the

22 person because the person gets a little frightened. He

23 might change the way he operates because he is not examined

24 like this a lot. He operates great and he can handle

25 transients, but he can't handle people standing over him

DAVbur

like that auditor. And I maintain that has an effect on how the guy reacts.

So I want to keep what I have got with regard to the weeklong instructor's evaluation of the person because that is the best evaluation you get.

I want to keep the second evaluation of the program on Friday for four hours by a third party, SRO qualified, which that, if I wanted to call it so, would be my check operator. I just don't happen to call it that.

I personally wouldn't be opposed to calling him a check operator. My vice president might be opposed to it. But I like the program we have, and I do believe that if the NRC wanted to audit and they came in and observed this man giving this exam they would believe they had the very best mechanism for doing their job much better than giving written requal exams or sending people in to give exams on a plant that they really are not qualified to operate.

Did I answer your question?

DR. REMICK: Yes.

MR. REED: I don't think you answered my part of your question in a way. It is a very persuasive discussion, but I don't think you got to the point of fishing or cutting bait.

The world is turning. The motion is to more and more regulatory to interfere with your requalification

1 examinations.

2 Now, what do you see? You say you didn't like

3 it. It seems to me that you have to have a counterproposal

4 that is effective or more effective than what the NRC might

5 come up with.

6 MR. WOODARD: I have it.

7 DR. SHEWMON: He has got it. He described it.

8 MR. WOODARD: What don't I like?

9 I think maybe you misunderstood what I said. I

10 don't like them conducting the program. I think they can be

11 far more effective by auditing through observation of my

12 third party examiner.

13 Would you call that a third party? An

14 independent examiner.

15 To some degree watching him and observing him

16 give the examination to the licensee. That is what I am

17 saying that I like.

18 MR. REED: So you endorse in principle the check

19 operator, or I will just call it the designated rep concept

20 of some variety?

21 MR. WOODARD: I endorse having a second person

22 administer the annual requal exam on the simulator like I

23 just described that we do have.

24 MR. REED: Those words come awfully hard out of

25 your mouth.

DAVbur

DR. KERR: Aren't you going to ask him about mechanical aptitude testing?

(Laughter.)

MR. WOODARD: Let me tell you what I am trying to avoid. I am just trying to be square with you. I am trying to avoid getting you to persuade me to say check operator program at Farley Nuclear Plant because that can be taken out of context. That is what I am trying to do.

DR. REMICK: I am also concerned that if there is a check operator program and it would be administered by the NRC and there is a certain price that goes along with that, if you look at some of the things you proposed where they will be checking the check pilot or administering tests to the check operator, things like that -- it is those aspects that concern you, the NRC involvement with that, of which now there is not quite as much as that?

MR. WOODARD: Yes. I don't believe that that can be done unless the people that do the checking are licensed on our plant and experienced and current on requal, okay? I really don't believe they can effectively do that.

However, I do believe that the NRC can effectively audit, just like they do in hundreds of other areas, the requal program.

So I am advocating they maintain the same system that they have for auditing everything else, and I think

DAVbur

that would be sufficient.

Should I go on to the other questions?

MR. WARD: Yes, please.

MR. WOODARD: Second question: what are the major advantages and disadvantages of a check operator program from the industry?

Of course, it is hard to answer that. You ask somebody that doesn't really want to do it like it is in that document and what are the advantages?

The advantages, if you did it --

DR. KERR: You can always say there aren't any.

MR. WOODARD: Yes, sir, that is good.

MR. WARD: Next question.

(Laughter.)

MR. WOODARD: Let me just tell you what I think they would be. I will try to eke some of them out.

(Laughter.)

They would be an improvement over the current NRC-administered exam.

(Laughter.)

I really mean that. The guy would have an SRO license, and he would have operated. Okay, he would have credibility to some degree. It would be less stressful on the individual, since there wouldn't necessarily be a pass/fail criterion, as I understand it. It would reflect

DAVbur

on the program, not on the individual. It would be beneficial in that it would be targeted towards program deficiencies, and I think you could find them.

One of the other things that was brought up in the documents -- and I believe that came out of this meeting -- was that you could benefit from information shared across the country, and I say that is not worth pursuing beyond what is already being done. We are doing that in the industry to an intense degree.

Right now our plant has two SROs that are peer evaluators to go around the country doing evaluations with INPO, and it gets good. We are getting a lot of good things out of that.

Also, we have one man full time that is a shift supervisor at INPO that goes around and does the same type of thing as a full-time job.

We also have three people in our training department that are doing peer training evaluations at other facilities. I believe they are mostly in maintenance and technical areas.

So I am saying we have a lot of information sharing mechanisms in existence right now, and I don't think we need any more.

DR. REMICK: Do you have regional training managers in your region?

DAVbur

MR. WOODARD: We have a regional meeting. Actually, we have a regional meeting with the NRC, too.

DR. REMICK: But you have your own managers?

MR. WOODARD: Yes. We have one. It may be in conjunction with INPO.

DR. REMICK: I know the Northeast has one who is quite active.

MR. WOODARD: I am not certain it is that same type, but I know we do meet in conjunction with him.

We have a simulator users group that we meet with, too. That is all Westinghouse PWR type simulators. We get together and make sure we have valid programs in our simulator.

Okay. So much for advantages.

Disadvantages?

I believe that if a check operator obviously is not qualified on the plant that he really can't do it. I will not elaborate any more on that.

Secondly, I believe that without a valid criterion the program will not be very good. I think that is true of any program.

Dilution of valuable resources? We have some of the country's most valuable resources in our SROs, and I think that to go on a nationwide program could dilute that.

Operators I believe would be reluctant to

DAVbur

1 objectively evaluate their peers at another plant, mainly
2 because of confidence, not feeling particularly confident on
3 a plant they weren't licensed on.
4 DR. REMICK: Would they in general be probably
5 more confident than NRC examiners?
6 And I am not criticizing NRC examiners, since I
7 was one at one time.
8 But wouldn't they in general be more confident
9 than someone just going on some kind of a system plant?
10 MR. WOODARD: Absolutely, in my opinion.
11 MR. WARD: That was the advantage list, if you
12 remember.
13 MR. WOODARD: That was an advantage that I
14 listed, yes, sir.
15 The liability of check operators I think would be
16 an issue. I can mentally churn up all kind of ways that a
17 person could really come under the gun liability-wise, okay?
18 If he goes in and finds fault with a program and
19 the utility takes issue with it, and so on and so forth, how
20 do you appeal it?
21 Another way to go with the conflicts type area
22 has to do with disagreements with the NRC. The check
23 operator -- let's say he were to disagree with the NRC over
24 an issue and he were working for them on it. I am answering
25 this like it was originally written in that document.

DAVbur

We have lots of problems there.

That further answers the next question, which is: what are the problems of direct interaction with the NRC?

Those are problems of disagreement between the check operator and the NRC and disagreements between the check operator and the utility that he is examining.

Also, there could be some long term effects on the individual, which was discussed earlier. I just don't believe we got the message across. It was stated perfectly, but I don't think anybody really heard.

That is where the check operator goes out and he has judgments, he has findings, and valid or invalid, everybody gets upset about them and they come back and reflect on him, and you know, what kind of position does that put him in?

That is a tough position because if he were to be working for the NRC and the utility it would be a very difficult thing for him to come forward with problems. It would be easier if he could come forward to one person, one organization, and then be open with all organizations. We must have openness in any of this.

That is why I like the audit program, because the individual doing the checking can be very open and say here are my results. He has given them to the utility. And then over here is the NRC looking at them, and they are just open

DAVbur

to everybody. And if somebody has got a problem with it, they just have to deal with it.

I like that much better than running off to a phone booth, calling the NRC, and saying, oh, I reported to the NRC on these issues but I reported to the utility on these other issues. That is a problem.

MR. WARD: About five more minutes?

MR. WOODARD: I am almost through.

I am going to skip some of these questions. We've already covered them.

Can I give you this, even though I haven't rad it?

MR. WARD: That would be fine. We'd appreciate it very much.

MR. WOODARD: I am back to my conclusion.

My opinion on the subject is shared by many other utility managers, instructors, licensed shift supervisors, shift foremen and plant operators. NRC-administred examinations provide a extreme source of frustration for nuclear managers and operators alike. In a country with the resources we have, the licensing process should be beyond reproach. Requirements should be well-defined, reasonable and appropriate to the job at hand. There should be no mystery taking a written exam on gamesmanship in a simulator exam. The program should be administered uniformly by competent personnel across the country.

The only way I see to achieve effective training is to develop the programs based on the systems approach to training on plant-specific job and task analysis and examined against the published listed objectives. This method assures there is no question as to the knowledge and

1 performance requirements for licensed operators.

2 Thank you.

3 MR. WARD: Thank you, Mr. Woodard.

4 MR. GRIFFIN: That basically concludes the

5 presentation that we had. I see that I was relatively

6 succesful in one of the biggest problems I had this morning,

7 was trying to get Jack to overcome his shyness, in order to

8 tell you what he really felt about the Commission.

9 (Laughter.)

10 MR. GRIFFIN: We have appreciated the

11 opportunity to address you today, and I hope that we have

12 provided some additional information and insight.

13 MR. REED: I have been harping on this designated

14 representative thing for a couple of yeare, and I am pleased

15 to see that there has been some motion on the part of the

16 NRC Staff, at least they have gotten away by having check

17 operators in the same facilities doing the examining for

18 requalification.

19 I see some motion on the part of the utilities,

20 but I think the fact that you are in transition here today

21 from the old SECY paper to the new concept shows that there

22 is more transition required. I really think the utilities

23 ought to continue to think about this hard and think big.

24 Don't just think check operators. Think check mechanics.

25 Think check I&C people, check HP people, think more and

DAVbw

more about the FAA structure.

Now you will probably say it can never happen to the NRC. You are probably right. Once a bureaucracy has been established and adversarial climates have been generated and great empires have been generated, maybe it can never happen, but I would keep digging.

MR. GRIFFIN: I hope that the tone of our program today said that we, one, believe that the programs, that at least the utilities that were represented here today can meet the need, they do meet the intent of the check operator programs, those in combination with an effective and accredited training program and an effective NRC audit program can insure all of us from the NRC to the utility management, ACRS and the public, that we have a high probability of having good training programs, well qualified operators and that the plants are, in fact, being operated safely.

On the other hand, I think I disagree, maybe, with what you alluded to earlier, Mr. Reed. I happen to believe that utility management in today's environment is a heck of a lot more receptive to change and is willing to consider change and, in fact, is changing, is changing dramatically and changing quickly. If we can find and identify programs, processes, systems, that will let us do our job better, operate our plants better, produce better

1 people, then we are going to do that. We are going to do it
2 as quickly as we effective can.
3 MR. WARD: Okay.
4 DR. REMICK: Just one comment, John. I would
5 hope, and I guess NUMARC hasn't come down on this question
6 yet, but I hope when you consider it, that you won't tie
7 your thoughts to just the SECY document and what is wrong
8 and what is good about it, but the concept and look at it.
9 Would this be helpful or not. If basically, industry feels
10 no, we already basically have the capability, from my
11 standpoint, that is fine, but I wouldn't restrict your focus
12 on just that one concept.
13 MR. GRIFFIN: I agree 100 percent, because this
14 is really the first forum that we'd have an opportunity to
15 deal with it, to collect what information was available in
16 that '85 document. It was, in fact, the document that we
17 got our hands on, and we had to make a decision on what we
18 were going to prepare and what we were doing, and that is
19 what we chose.
20 Certainly, as we work closer with the Staff on
21 this issue, we will proceed through the whole operator
22 recall effort, and as Mr. Reed said, we are going to see a
23 transition on the part of both organizations.
24 MR. WARD: Okay. Thank you ver much,
25 Mr. Griffin.

DAVbw

1 Would the Staff like to make any final comments?
2 You don't have to.
3 MR. BOGER: I just wanted to say that I think
4 we've identified an ACRS meeting about a year ago that we
5 had gone away from the objective of having check pilots,
6 check operators go to other facilities. So it is not
7 something I dreamed up this week.
8 MR. WARD: Thank you very much. Gentlemen,
9 thank you very much.
10 Let's take a break till 3:30.
11 (Recess.)
12 MR. WARD: Our next subject will be a discussion
13 and a briefing on the DOE High Level Radioactive Waste
14 Program.
15 I'll Dr. Moeller to introduce the speakers.
16 DR. MOELLER: Thank you, Mr. Chairman. For
17 purposes of the record, let me just state that as we know,
18 the Nuclear Regulatory Commission, the Commissioners
19 themselves, have asked that his committee provide oversight
20 for them and for the NRC Staff in all matters pertaining to
21 the high level radioactive waste program. Of course, the
22 federal agency that is responsible for the construction and
23 operation of the first and second respository will be the
24 U.S. Department of Energy, and as part of our keeping
25 informed on this matter, we have the pleasure this

afternoon to have with us Ben C. Rusche, Director of the Office of Civilian Radioactive Waste Management from the U.S. Department of Energy, who will then be briefing us on the current status of that program and their activities.

He has with him some members of his staff, and I will leave it to you, Ben, to introduce them.

It is a pleasure to have you, and the floor is yours.

MR. RUSCHE: Mr. Chairman, Chairman Moeller, members of the Committee. I am delighted to have a chance to be here. I couldn't help but notice as I walked in the door, that it seems like some things haven't changed. I thought five, then I said, no, then I said, ten, no, fifteen, no, twenty years. I couldn't help but note that the youth that I noticed that characterized the Committee in those days is still present, though perhaps clothed in a slightly different package.

So I welcome the opportunity today to talk to you about a youthful subject.

In addition, I have with me three of the key persons that I have associated with myself and with this program in the Department of Energy. Many of the top managers are professional full-time, that is, career employees. When the President and the Secretary invited me to come to this role, I sought to bring, in addition to

DAVbw

1 very skilled full-time career employees to the progam, I
2 sought to bring at least two or three outsiders, outsiders,
3 in the sense that they were not career employees.
4 To that end, I invited Bill Purcell, who is
5 seated in the center here, who at that time was with
6 Westinghouse, and some of you may recall, was associated
7 with the Clinch River Project, to join. He is the Associate
8 Director for Geologic Repositories.
9 Seated on his right is Roger Hilley, who is a
10 former DuPont associate of mine, and at the time we came to
11 Washington, was the director of the Savannah River
12 Laboratory.
13 Some of you -- at least Dade and I -- have known
14 Roger for a long time.
15 And then Ed Kay, seated here. Ed is my deputy.
16 I have had the opportunity of working with Ed in at least
17 two or three existences in the Department. When I came up
18 with Secretary Edwards in 1981, Ed was adventuresome enough
19 or tolerant enough to join the Secretary's staff and work
20 with me as a special assistance.
21 So I am pleased to have them here today. When
22 Dave called me sometime ago and suggested that it might be
23 worthwhile for us to get together for some general
24 discussion, I welcomed the opportunity, in that I
25 concurrently hold general discussions with the Commission.

DAVbw

1 In fact, my next general discussion with the
2 Commission is scheduled for the 27th, and it is a session
3 that is not altogether different from what I plan to do
4 today, although I may start a little bit further back today,
5 because we have not had a chance to talk before.
6 In those sessions, what I end up doing is,
7 without an agenda, introduce to the Commissioners, topics of
8 current interest or matters that deserve their management
9 attention or that have commanded my attention as a
10 management activity of the program. We start out those
11 sessions with the objective of communicating as effectively
12 as we can. We pretty much make ourselves come to the view
13 that we are not treating the session as a decisionmaking
14 session.
15 So we have a free flow of dialogue, a means of
16 keeping the Commissioners informed. To some extent, that
17 may be something we may want to look at in our interaction
18 with the Committee. In that, we are some years away from
19 major final decisions on the part of the program, yet we all
20 have a commitment to finding a way to work together, so that
21 when we come to those final decisions that are eight years
22 down the road, we will have done the thing in the meantime
23 that will make those devisions flow fast, flow effectively,
24 and lead to confident conclusions on both of our parts.
25 To some extent, I think that must be your

1 objective as well.

2 To the extent that it is, perhaps the

3 interactions that we have been having with the Staff

4 extensively and with the Commissioners themselves, and I

5 have been very pleased that the Commissioners -- recognizing

6 the Commissioners in the generic sense -- special

7 responsibility under the Act, the Commissioners have given

8 perhaps an unusual amount of their personal time to

9 maintainaing awareness of what we are doing and what our

10 problems are and what the opportunities are for us to work

11 together.

12 From the very outset, it was important that we

13 find a way to work together, both having a very clear-cut

14 statutory role in this exercise, but at the same time, both

15 having a statutory responsibility to see that the effort is

16 carried out responsibly and on time.

17 What I would like to do today is, possibly at the

18 risk of affronting some of you who have followed this

19 program with the same degree of interest that I have -- I

20 may bore you a little bit by giving you some background.

21 For those of you who have not had it, it might be

22 worthwhile on this first occasion.

23 I would like then to talk a little bit about what

24 was the situation at the time the Act was passed and where

25 do we come up to the moment. Where were we then and what is

1 our current status.

2 I would then like to talk about what has happened

3 since I was appointed the first director of the program by

4 the President and what directions we are now taking and try

5 to wind up, as it were, talking about how we might work

6 together, as we see some opportunities and then leave some

7 time for questions.

8 And I understand your schedule, and I am very

9 appreciative of your understanding of my schedule for the

10 afternoon, and I will certainly keep my eye on the clock and

11 be sure that we have some time for discussion.

12 If that sounds like a reasonable way to proceed,

13 Mr. Chairman, I would like to start down that road.

14 You have been handed a package which I will get

15 to toward the end of the discussion. I don't think you will

16 find it especially useful from the standpoint of following

17 what I am going to say.

18 At the risk of being presumptuous, I am going to

19 treat you somewhat like the Commissioners and count you as

20 friends, in the sense that we both have a charge to keep,

21 and we both have a schedule to keep, and we both have

22 obligations to meet. We both respect each other and want to

23 find out how we can do that job best, in the interests of

24 the country.

25 It was late on an evening in December, I believe

DAVbw

1 December 22 of 1982, that the Congress finally came to the
2 conclusion, and literally developed, as a result of about
3 two days of very frantic activity on the floor of the
4 Congress, a new bill dealing with high level waste disposal,
5 called the Nuclear Waste Policy Act.
6 The Congress passed a law, which for many of us
7 was the culmination of almost 30 years of work. There is at
8 least an identifiable path for at least 12 or 15 years prior
9 to that afternoon.
10 I had the good fortune in the months before,
11 working with Secretary Edwards, to have worked closely with
12 many member of Congress, trying to get to the place where an
13 Act could finally be put in place. Many of you will recall
14 that when President Reagan issued his Nuclear Policy
15 Statement in October of 1981, one of th key objectives he
16 established was that of putting in place a nuclear waste
17 program, founded on a statutory basis, for this country to
18 once and for all deal with the subject in a responsible
19 manner. The President was, himself, a key factor in the
20 passage of the Act, in my opinion, and as recently as
21 Tuesday of this week, he reiterated it.
22 I was just looking at the transcript of his
23 meeting with a group of editors, a lunch with a group of
24 editors. That was on Tuesday, just before his press
25 conference on Tuesday evening. One of those editors

DAVbw

1 happened to be Dick Smyzer from the Oak Ridger in Knoxville
2 and Oak Ridge, Tennessee.
3 Dick asked the President about the waste program,
4 and it was, I think, both a refreshing and a confirming
5 statement that he made, that, in essence, he recognized, as
6 did most Americans that nobody would like to have the waste
7 in their backyard, but that he also recognized that it had
8 to be in somebody's backyard, that we had the technology to
9 safely and to permanently dispose of such wastes, and that
10 we were going to assure that it was done safely, that we
11 were going to assure that it was done.
12 The President himself, I think, in this
13 conversation, which was absolutely extemporaneous, we had no
14 idea, is fully aware of what is being done at the program,
15 and as you will see in some of my later comments, is a key
16 participant in a decision that will come up later on this
17 spring.
18 The Act, then, was born with a number of
19 purposes and findings in mind. I would not want to go
20 through, in great deal, but I keep the Act with me, and it
21 has sort of become the "Gospel According to the NWPA."
22 (Laughter.)
23 MR. RUSCHE: I find that it is a remarkable piece
24 of legislation. As a physicist and an engineer, I never
25 would have thought that I would found such pleasure in

DAVbw

1 reading something as staid and as sterile as an Act, but
2 believe you me, this thing says, we've got a problem. We
3 know how to do it it, and somebody is charged with doing
4 it. They're paying for it and getting it done on time.
5 And it turns out in this case, that it's me and
6 my associates and others at DOE, and you. Every time I find
7 somebody who has a bit of a waffle and says, do we really
8 have to? Are we sure? Or do we wonder? I'll say, "In
9 Chapter 6, Verse 37," -- it seems to be effective.
10 (Laughter.)
11 MR. RUSCHE: In fact, I would say it has done one
12 other thing for me. At one time I might have been willing
13 to call myself a scientist or an engineer. Even when I was
14 at NRC, I think I probably would have been willing to do
15 that. Since then, though, I have had an number of people
16 question, and I have had a doubt or two myself, but with the
17 passage of this Act and my movement to this position, I have
18 once again become a scientist, but perhaps better stated, a
19 political scientist.
20 (Laughter.)
21 MR. RUSCHE: If there is any message I would say
22 to you today, it is that we must start with good science and
23 good engineering as the foundation for what we are doing,
24 but that is but a small part of getting this job done.
25 Literally, I spend -- I don't believe that it is

DAVbw

1 an exaggeration to say that I spend 30 or 40 and during some
2 periods of the year as much as 60 percent of my time on the
3 Hill with members of Congress.
4 Last week, for example, I visited with 23 members
5 of Congress, personally, one on one, in meetings that lasted
6 from 20 minutes to three hours on this subject.
7 The last year, I've become well-known,
8 regrettably so, to some people, to over 150 members of
9 Congress, and I have yet to find a member of Congress who
10 said the bill should be done away with, that the wrong
11 choice was made for America.
12 Almost all of those statements, though, are
13 immediately followed by, it was the right choice for
14 American, but it is the wrong choice for my state. And as
15 the President recognized, therein lies one of the great
16 challenges that we have before us. The Act found, the
17 Congress found, and the Act that was signed into law by the
18 President, that we can handle high level waste and spent
19 fuel in the short term safely. The Act also found that it
20 was responsible and appropriate that this generation of
21 Americans choose the course of dealing with that waste and,
22 in effect, moving to dispose of it permanently in deep
23 geologic media, as the right course for America.
24 Having chosen deep geologic disposal as the right
25 mechanism -- and many of you will recall that over the

DAVbw

1 preceding number of years, maybe as many as ten years, there
2 was a good bit of work being done by the Department, by
3 universities, by some of you, I suspect, which finalized in
4 an Environmental Impact Statement that was issued during the
5 late 1970s, which Impact Statement provided a major basis
6 for the congressional choice of deep geologic disposal.
7 If you haven't gone back and looked at that
8 document lately, you might find it interesting from time to
9 time to be reminded, that from time to time that we did look
10 at Antarctic disposal, we did look at space disposal, we did
11 look at sea disposal, as well as land disposal in geologic
12 media. And of course, during the period, there was a
13 considerable debate, both technical, political and
14 philosophical as to whether the nation should be moving
15 toward permanent disposal or retrievable disposal or
16 retrievable management.
17 In fact, I will point out later on, that
18 dichotomy remains in the Act, and we have attempted to
19 integrate those two into what we believe now is a program
20 that is appropriate for the country.
21
22
23
24
25

The act provided that beneficiaries should pay the cost of the program, not taxpayers in general. That is done by assessing a fee of a mil per kilowatt hour on all electricity generated by nuclear power plants in the country. That means we collect on the order of $350-400 million a year.

With the current array of power plants that are in operation and with the work that utilities and you and the staff are doing, there are a number of other plants that should come on line in the next 10 years or so. And we would expect that by the middle nineties, that the revenue on the 1 mil per kilowatt hour basis might be as high as $450 million.

In addition, the act provided that wastes that had been generated prior to the passage of the act likewise should be assessed a fee. It would be called a one-time fee. Utilities would be offered several options -- either to pay by a time certain, which happened to be the end of June last summer, that is, June '85, or elect a deferred payment option of one, two or three ways, which it's not particularly important for us to get into here.

But if they were interested, they could elect the deferred option. The total obligation based on the fuel then in existence is about two point -- somewhere between $2.5-2.7 billion.

DAV/bc

1 The utilities at the end of June last summer
2 split a little bit more than 50/50 in choosing to pay the
3 one-time fee at that time. We collected about $1.46 billion
4 on that faithful Friday in June last summer. That now
5 resides in the Nuclear Waste Fund, which is a separate fund
6 from the general fund of the United States.
7 It is managed by the Treasury Department for the
8 Department of Energy, funds from which can be expended by
9 the Secretary or his designee, me, only upon appropriation
10 by Congress through an annual appropriation process. And
11 the funds may not be used under the law for any other
12 purpose.
13 Back during the summer, when we were having a
14 problem with Social Security, you'll recall, the social
15 security funds, I had two or three committees who invited me
16 up to see if they could borrow some money. We didn't work a
17 deal on that at all because the kind of interest I was
18 thinking about, they were not prepared to pay.
19 The fund does provide revenue for the program.
20 And up until this year, the annual revenues had been about
21 equal to the annual expenditures in the budget that is now
22 before Congress, that is, the '87 budget.
23 The expenditures proposed in '87 will exceed the
24 annual revenue received by the fund, that is, we will begin
25 to extract from the capital asset that is in the fund based

DAV/bc

on the one-time fee. Of course, we continue to receive that remaining $1.5 billion in payments over the 10 years or so.

The act established some very precise schedules. Many, many intermediate milestones. We have in things that we have done attempted to place major emphasis on the date January 1998 as the date by which the federal government must begin to receive fuel for disposal. And one reading of the act would be, again, to receive fuel for disposal in a geologic repository. And that is our objective.

Our schedules now show that we expect to have the first repository ready to operate, ready to receive fuel by January of 1998. This year is a very major year in terms of decisions. I think it's not inappropriate for me to pause a moment and note that as you look at the act it is highly prescriptive, perhaps much more so than most federal acts. Certainly more than any that I know of in terms of many of these details.

On the other hand, the act still leaves a number of questions to be resolved in the early years, and we are in the middle of that question-resolving period right now. I will refer to some of those questions that have yet to be resolved.

But, with respect to the schedule, it is ms expection that by about this time next year, we will know what Congress is going to do, and we will be able to define

1 the waste system with fair precision to a degree greater
2 than we have done so in a number of ways that I'll refer to
3 later on.
4 But, by about this time next year, we will have a
5 major period of reevaluation to look at these schedules in
6 the light of what decisions were made during this year.
7 The act established a unique set of federal/state
8 relationships. In fact, many people would suggest that it
9 was an adventure in federal/state relationships. If any of
10 you have been following the press in the last several
11 months, you would know that whether it's an adventure or
12 not, it's certainly exciting. In fact, as one person said
13 to me, "Rusche, you sure do have a way of getting people's
14 attention." And we have done that in a number of ways, not
15 especially for getting their attention but for the purpose
16 of making progress in the program.
17 It has reinforced, however, again and again, but
18 though technical excellence must be the hallmark of the
19 program, none of us would take this for granted, I think the
20 public will almost take it for granted. But, technical
21 excellence alone is not adequate for the program's
22 satisfactory execution.
23 Therefore, we spend much time and much effort in
24 this federal/state relationship and I wouldn't be surprised
25 if, at some time during your deliberations, you might want

to hear from some of these state people. If you did, I can perhaps give you a transcript of that message because I get it about every other week in the mail, in one form or another.

And it generally is that we are not thoughtful enough, we're not communicative enough. We do not provide enough money to grants. We have been irresponsible in taking courses of action that focus attention on schedule as opposed to focusing attention on quality. It makes the point though that we're all forced in the execution of the program to continue to make judgments again and again and again.

And to the extent that you, the Commission, involve yourselves as we move down the road in some of these formative technical decisions, you, too, will have the opportunity to consider your own role in having to make judgments that are not the kinds of judgments that involve factors beyond the technical issues that we have to look at.

We have, however, tried in our work with staff to keep the attention of the Commission and the Commission staff focused on the technical issues. If some of my state friends were sitting in the audience, I would say what I'm about to say equally well:

I think the state representatives would look for opportunities to involve the several parties who are in the

DAV/bc

1 activity in a manner to serve the purposes that they think
2 are important. That's perhaps an obfuscated way of saying
3 that they might want to play this body against that body
4 against that body if they conclude that the objective they
5 have in mind, which might be a noble objective -- such as
6 assuring that we've made an adequate measurement of the
7 hydrolic parameters of a particular block of rock.
8 On the other hand, it might be another kind of
9 objective, which would suggest that it would be better if we
10 took another course.
11 So I would urge you to keep in mind as we talk
12 that, although, as we are interacting with the staff -- and
13 we have extensive interactions with the staff, and I'll try
14 to get to what those kinds of interactions are a little bit
15 later on -- in the context of our work with the states, we
16 have attempted to focus the staff's and the state's
17 interactions on technical issues and reserve the other
18 issues for the interaction between the Department.
19 We're not completely successful because of this
20 indication that I've just made to you. I think it's worth
21 noting that the Congress recognized that the course that
22 we're on is not a course that will be pursued or carried out
23 without great differences of opinion amongst many
24 Americans. And to that end, Congress reserved for itself
25 the final validation of our course of action in the one

DAV/bc

1 system that is currently authorized, namely, geologic
2 disposal for the first repository; and reserved for itself
3 the final decisions on major modifications to the program,
4 such as whether or not we should have a monitored retrieval
5 facility, which I'll talk about later, and whether or not we
6 need a second repository, which I'll talk about later on.
7 I think it was a masterpiece of legislation that
8 came out of that Christmas session. Many would wonder now
9 as we look at it, with some of the anomalies that occur in
10 the act, whether it could ever be done again.
11 I would not presume, and Congress might not rise
12 to such occasion in the future. In fact, seeing
13 Gramm-Rudman makes me know that there is still lots of
14 innovation remaining amongst Congress; and no telling what
15 would come out the next time.
16 But it is clear from what we have done in the
17 last couple of years that this bill does in fact provide a
18 workable way to get things done. And on many occasions
19 which I've had the opportunity to testify on the Hill, I
20 have been asked what should be changed about it, my answer
21 and my plea is: Please don't start messing with it. It
22 represents such a delicate balance of many forces, technical
23 and political, that an attempt to change it is almost
24 certainly going to lead to a net reduction in the
25 effectiveness of the bill.

1 DR. LEWIS: Do they regret this as much as they
2 regret Gramm-Rudman?
3 MR. RUSCHE: On the contrary, Harold, I recognize
4 that this does represent a delicate balance and it does
5 deserve to be preserved. In fact, those who were what might
6 be called the principal architects, like Chairman Udall,
7 Senator McClure, Senator Simpson, Senator Johnston, but
8 Chairman Udall and the House stands above all the people in
9 the House in recognizing the great step that was needed and
10 that was taken. And he has been very jealous, as have the
11 members of the Senate, that what appears to be a self-
12 serving or local issue is just not right for being interest
13 in this piece of legislation.
14 Having reserved for itself these final choices, I
15 think Congress recognized that there may come a time when
16 issues that are grave issues in the minds of states,
17 expressed in the very kinds of terms that we've talked
18 about, perhaps couched in technical terms, perhaps not, but
19 issues which go to the point as to whether or not the nation
20 should proceed, or issues that were properly reserved for
21 Congress and not properly delegated, to a Secretary or
22 myself or to the Commission, and, in fact, that's where
23 they're going to be settled, in my opinion. I think they
24 will be settled.
25 I think they'll be settled because there's a

DAV/bc

1 genuine recognition on the part of Congress that we need to
2 take that course, that it is not responsible for this
3 generation to leave fuel in reactors and basins and reactors
4 around the country for an indefinite period. And,
5 therefore, we ought to move.
6 I think the institutional and social issues that
7 are involved will force the Congress to realize that having
8 a law in place provides the opportunity for all the states
9 to see that the matter is taken care of, even at the expense
10 of one state. And that's a matter that is just the reality
11 of doing business in this country.
12 In that sense, I couldn't help but be amused in
13 the hearings that Chairman Udall held last Friday. A
14 Congressman from North Carolina, in whose state we have one
15 of the tentative sites for investigation of crystalline
16 rock, was trying very hard to invite me into supporting some
17 legislation; and he was very vehement in his view. His
18 final comment must have gone something like:
19 Well, Ben, you know, we just got people down in
20 North Carolina that just don't want this thing. We just
21 can't put it where those people are.
22 The Chairman, in his wisdom, when his opportunity
23 to speak a few moments later came, said:
24 Congressman, I have to tell you. I went to Utah
25 last year, had a hearing. And the message that came out of

1 that hearing was:

2 Chairman Udall, we just can't put that stuff out

3 here because there are no people out here. We've got to

4 preserve this pristine place.

5 The Chairman says we only have two kinds of

6 places in America -- places where there are people, and

7 places where there are not people. And we've got to find a

8 place to put it.

9 (Laughter.)

10 MR. RUSCHE: I think the profoundness of that

11 revelation is something that escapes some people. We've got

12 to find a place, and I think we have a place or have the

13 prospect of finding such places.

14 Let me then continue right quick. The act

15 requires that we go through a very extensive planning

16 process, which we're in the middle of now in a number of

17 respects. Perhaps the single most important document in

18 that planning process is the mission plan, which was issued

19 last July. Comments were provided by EPA, the Commission,

20 all federal agencies. I think some of you had an

21 opportunity to participate in that review.

22 The mission plan is an attempt to state the

23 current best estimate of what our intent is in the future.

24 And, according to the act, its purpose is to provide an

25 informed individual an opportunity to see the basis and

status on which the program rests. It is not an immutable document. It is subject to change any time it needs to be changed as a result of changing circumstances.

And we have committed to reviewing on an annual basis. We may or may not make formal changes to it on anything like that frequency. If we've done a good job, perhaps it will survive much longer than that. The next time I expect that we will look at it again is about a year from now, in the context of the discussion I made a moment ago.

The act provided that to about the maximum degree that an entity can exist in the federal government and be like a private entity, this program is that entity. It established the office which I have the privilege of directing. It established that we were to be subject to all nonfederal licensing procedures, such as that from NRC, EPA, DOT, the Department of Interior, the Army, OSHA, Mine Safety.

So, in that sense, we are essentially identical to a private corporation, or an individual. In some sense, I think that collection of features established by the act puts the office in about as close a position to a private entity as it can be. And yet be a part of the government.

Let me then note quickly that in the act we are directed beyond the first repository to be prepared to put

DAV/bc

in place what is called Federal Interim Storage, a provision that would be invoked if you, the Commission, were to determine that a reactor found itself in a nominal emergency condition with respect to storage.

It limits that federal interim storage to 1,900 tons. It would likely be done on federal sites, probably at sites that already exist, and would be paid for by the users.

We have not established an FIS fund, do not now intend to, do not now see the need for it. But the authority in the plans are currently in existence.

In addition, the act required us to put in place a transportation system that would be prepared to move such waste from its point of origin to the disposition site. It's a major activity that we have well underway. I'll do more now than to say that we have just issued a transportation business plan, and we have a small amount of research that's underway, generic research, that's aimed at developing a number of dry casks suitable for on site storage at reactors either in conjunction with or during the emergency time for reactor storage.

That transportation system, as the result of the business plan, will sometime later in the spring, if I'm not mistaken, be going out for a major procurement activity to start a major task development activity by the private

DAV/bc

1 sector. The act prescribes that, in transportation, we are
2 to use, to the maximum extent possible, the private sector.
3 We do not intend to establish a major federal cadre of
4 transportation activities and own such equipment.
5 We expect to see it carried out, in some sense,
6 almost as if it were being done by Lilco. That will evolve
7 over the next several years.
8 The Department of Transportation is a major
9 participant in helping us to determine and, to some extent,
10 acting as a regulator of such activities.
11 Finally, the act directed us to begin siting
12 activities, to locate possible sites for a second
13 repository, but did not authorize the second repository.
14 And directed us in Section 141 to consider whether a
15 monitored retrieval of storage facility was appropriate for
16 this system.
17 In fact, we were directed to bring a proposal
18 back to Congress by June of 1985, which proposal was to be
19 site-specific, design-specific, of such quality that we
20 could go to bids if the Congress should choose to move, and
21 we are in the process of bringing that to conclusion right
22 now, about six months later than planned, because of another
23 extensive interaction period with the State of Tennessee --
24 and I'll get to that in a few moments.
25 That then kind of brings you to the place about

DAV/bc

knowledge of the act in general. Let me take just a minute or two and tell you what happened when the act was passed. When the act was passed, we had nine sites under consideration in various types of rock. Mostly in the west and the south and southwest.

The act clearly established a sense of urgency to proceed and directed us for the first repository to move forthwith and identify potentially acceptable sites on the basis of information then available.

So the first repository consideration is being done on a compressed time schedule. It was done before we were able to establish siting guidelines. We have of course much data and much experience in hand. One of the early revisions of the act was to establish siting guidelines. And you will remember that, amongst the first things that happened after I was confirmed, is that we did finalize those guidelines and receive the concurrence of the Commission in June of 1984.

Those guidelines have been indispensable, an absolutely essential part of the consideration as we have moved from the identification of potentially acceptable sites, a definition described in the acts, to nomination and eventual selection of sites for characterization.

I think it is clear from the act that Congress intended that we proceed on an expedited course. If you read the act, you will see that Congress made a number of variations or adjustments to our interactions, in requiring us to proceed on certain time schedules and prepare documentation in certain ways.

It exempted certain NEPA considerations at certain times in the process, all of which I think conveyed a sense of urgency with moving ahead, and even with the schedule I have described; that is, the 1998 date, and even moving as urgently and as quickly as we can but yet taking advantage of the necessity, I think, to accommodate expert time where it is needed for interaction with the states to assure yourselves and ourselves that we have in fact reached the stage of technical quality that we can all have confidence in, the schedule is very tight.

We have set our schedule on the basis of an optimistic set of activities; namely, that we are going to be successful, that we are going to do things on time, and that we are going to get them done well, and in our interaction with you and with the Commission we will continue to find that pressure that will exist between us and you. I think the Commissioners have given clear recognition to this, and it has occurred in at least one sense.

DAVbur

1 In one of the planning documents required related
2 to the mission plan is a document called a project decision
3 schedule.
4 Congress, again through this vehicle, expressed
5 its interest in proceeding on a fixed time schedule by
6 requiring that all federal agencies who are involved and who
7 have an obligation, including the NRC, be made a party to
8 the project decision schedule, and if they fail to meet a
9 milestone in the schedule are obligated to report in writing
10 to the Congress.
11 We remain at this stage -- we have not published
12 the project decision schedule, the first one. We expect to
13 publish it hopefully within the next month or so, and we
14 have still one small difference with the Commission in that
15 the act allows 36 months for the licensing period from time
16 of application to time of grant. We concluded that we ought
17 to be able to do that in 27 months.
18 I believe that is about the time that was
19 required for the Clinch River licensing effort. This one
20 ought to be easier than or much more difficult than,
21 depending on how well we do between now and then.
22 In our project decision schedule and in our
23 discussions with the Commission, we have nominally agreed
24 that we would use 27, not because the Commission agrees that
25 it can be done but because we are both committed to taking

DAVbur

1 steps between now and then that will make it possible to get
2 it done in 27 months.
3 If we are unsuccessful, we will be the party that
4 has to make such statements to the Congress as our inability
5 to meet the schedule.
6 But again I am trying to convey to you the
7 picture that you do not normally encounter in some of the
8 things you are doing, say, from the utility side. In one
9 sense it is very good. It does cause you to weigh
10 priorities and exercise a degree of discipline in management
11 that may not otherwise be the case.
12 We all have to be careful, though, and I have
13 tried to be very careful in our statements, and we will in
14 all the documentation say that if we ever get to the place
15 where meeting the schedule would require us to forego a
16 confidence in quality, then the schedule is going to
17 suffer. We will just have to tell the Congress that in our
18 combined best judgment you can't do it that fast.
19 But we are going to be sure that we come to that
20 decision before we make that determination. We are not
21 going to start out with the determination that, you know, it
22 could take twice that long, so therefore we will plan for
23 twice that long and see what happens.
24 This program, I can assure you, is the best
25 example of being a self-fulfilling prophecy in terms of

DAVbur

1 schedules of anything that I have seen. Whatever we
2 schedule, we are going to fill up plus some more.
3 That discussion I suspect you and I will have
4 more than once over the next several years. I have it with
5 the Commission about three or four times a year and with the
6 staff at least once a month, in that we have a continuing
7 and very effective interaction with the staff, and I will
8 speak to that in my concluding comments in a moment.
9 At about the time the act was passed, we had
10 completed some generic studies for monitored retrieval and
11 storage designs. We have begun some screening work for
12 crystalline work as well as that for the first repository.
13 I was confirmed in May of '84 -- and I don't want
14 to associate too much with my part in the matter, but the
15 fact that a permanent director confirmed by Congress was put
16 in place permitted the program to move ahead perhaps more
17 vigorously than we were able to move before.
18 I would note, however, those people, at least two
19 of whom I think you know in the persons of Mike Lawrence and
20 Bob Morgan, who served as interim directors or project
21 office directors during the early days of the formation of
22 the office, I think did a tremendous job in collecting a
23 group of very competent people and putting in place early
24 procedures and beginning to move ahead.
25 The guidelines then were concurred in by the

1 Commission in June of '84.

2 In December of '84 we issued the drafts of the

3 environmental assessments, which are the basis for

4 nominating and selecting the sites for characterization for

5 the first repository.

6 Let me note that here was the first step -- well,

7 let me back up. On the guidelines, the act allowed six

8 months for the development of guidelines. We ended up

9 taking 18 months.

10 Most of us concluded that 18 months was required,

11 needed, and adequate for the development of a very effective

12 set of guidelines. I am sure that all of you are aware that

13 these appear in the form of -- what is our title number --

14 Part 960 of our code, 10 CFR 960. I am sure if you haven't

15 you will want to look at these.

16 We did not have to issue a draft for the

17 environmental assessment, which is a sizeable document. I

18 keep associating it with the EPA's chapter number, which is

19 40, I believe.

20 We decided, though, that this first major step

21 warranted a very vigorous public interaction. Therefore, we

22 published these drafts in draft form, sought the comments of

23 states, and in 90 days, shortly thereafter, we received

24 23,000 sets of comments, or comments in sets of comments.

25 Many of them were very substantive and very

1 valuable. Many of them were interesting, and many of them
2 were comments.
3 But it is clear that the public interacting
4 process was valuable. I would not want to leave you with
5 any other impression.
6 It was painful. In fact, it still is painful.
7 In fact, it still is painful because we have not completed
8 that process.
9 As we sifted through the public comments -- and
10 many of them were done by universities and university people
11 employed or brought by the states -- we did not find
12 anything that created a major new finding with respect to
13 the preliminary data we had.
14 We did, however, from the National Academy get a
15 comment from their Waste Management Board -- that board is
16 chaired by Dr. Frank Parker, who many of you know from
17 Vanderbilt -- that they were interested in the decision
18 methodology we had used to select from amongst these nine
19 sites first the five sites to nominate and then the three
20 sites that we proposed to characterize.
21 As a result of their recommendation, we give more
22 attention, and as a result of the recommendation of a number
23 of state people, particularly led by Governor Booth Gardner
24 from the State of Washington, we elected to add an
25 additional increment of time and asked the Academy's board

1 to look at our decision methodology. They did and in the
2 fall concluded that the utility estimation method which we
3 were using was a valid methodology to be used, but they were
4 not sure whether we were going to apply it in a valid way
5 and therefore thought we ought to have someone look at our
6 application of the methodology -- not the conclusions we
7 reached but that we applied it in a reliable and appropriate
8 fashion.
9 We then elected to add an additional increment of
10 time to have them look at such an application. That process
11 is now underway.
12 I think we have, excluding some of you who may
13 merit this title as well, as far as I know outside this room
14 all of the world's best experts in the utility estimation
15 approach.
16 I believe the definitive text was written by
17 Dr. Keenan, and he we finally found skiing in Europe and
18 invited him to come back, and he is working with us.
19 The committee has a number of experts that they
20 think are working. We have provided them with a great deal
21 of information and expect to have a final meeting with them,
22 we hope, about the end of March. And if our effort is as
23 effective as we believe it is going to be, we would then be
24 in a position in April to issue the environmental
25 assessments for the first repository in final form, to

1 recommend the nomination of the particular five sites and to
2 recommend to the President the selection of the three sites
3 for characterization.
4 As I mentioned in the very beginning, the
5 President himself is charged with making that selection of
6 three sites for characterization because it is from those
7 three sites that we would expect that we would choose a
8 single site for the first repository. Therefore, I hope
9 that by the early summer those three sites will be formally
10 designated and we will be prepared then to go to
11 characterization.
12 Characterization is another period of an
13 extensive investigation which will take us probably four or
14 five years. It involves sinking large shafts down to the
15 horizon of interest, mining out, making measurements of
16 about any sort you can think of based on a characterization
17 plan, the site characterization plan which will have been
18 developed in the light of and for the benefit of comments
19 from the Commission, and such exercises are now underway.
20 Another one of the planning steps provided by the
21 Commission, the Commission and its staff are not required
22 to approve the plan. It is not a prerequisite for us to
23 resolve every issue, although those of us who have worked
24 together know that any unresolved issues are likely to be
25 more difficult to deal with later.

DAVbur

1 So we are obviously moving in the most
2 cooperative way that we can to try to have the benefit of
3 the Commission's staff and its consultants to make that plan
4 as appropriate as we can.
5 The second repository. Work toward the second
6 repository is aimed at selecting sites that might be
7 suitable; in particular, looking at other media beyond those
8 we are currently looking at.
9 I think all of you are aware that the media we
10 have identified as the most likely for the first repository
11 are basalt and Washington State tuff in Nevada and embedded
12 salt in Texas.
13 Those will be finalized or whatever we finalize
14 will be finalized hopefully in April.
15 The act directs us to look in other kinds of
16 rock, to look for rock diversity for a second repository
17 and, to the extent that it is appropriate, to look for
18 geographic diversity.
19 To that end we are looking primarily in
20 crystalline rock located in rocks nominally to the east of
21 the Mississippi River.
22 We are not, however, required to locate a second
23 repository in crystalline rock.
24 And I perhaps, even in this discussion, may have
25 lapsed into interchanging crystalline and second repository,

1 and I would like to try to be very pointed and clear that
2 that is not what the act requires.
3 The act says that when we go to look for a second
4 repository we must characterize three sites from five sites
5 nominated just like we do the first repository, but in that
6 ensemble of sites may be sites characterized by the first
7 repository and not selected as the repository, if found
8 suitable, sites identified as potentially acceptable sites
9 but not nominated.
10 That means out of the nine sites, of which we
11 only identified five as nominees, there remain four other
12 sites that might be nominated. So it is possible that we
13 would have no crystalline rock in that ensemble. More
14 likely, we would have one or two crystalline rocks.
15 If Congress chooses to authorize a second
16 repository, our challenge, our direction under the act is to
17 get to the place, and now we estimate that time to be about
18 1999, when we would identify for Congress a site based on
19 characterization and the work we have done on the first
20 repository set for a second repository.
21 Congress then would either authorize the second
22 repository or be required by its own considerations to
23 remove the limitation of 70,000 tons, which limitation is
24 placed on the first repository until a second repository is
25 considered by Congress.

1 Those are some nontechnical features which were
2 put in the act late in the afternoon of the 22nd. You can
3 probably see how some of them fit together.
4 We identified 243 rocks in the United States that
5 appear to be worthy of further screening. These were
6 identified in a document called the regional
7 characterization report that was issued in final form late
8 last summer, I believe in August or September.
9 During this same period, we have been developing
10 a methodology for selecting screening sites from that 243
11 down to some number that we would work with further, and we
12 published a methodology report last April developed in
13 concert with the states, extensive state participation, and
14 then finally we published in January of this year, January
15 16th a draft area recommendation report which identified 12
16 sites that we thought worthy of further investigation in
17 crystalline rock.
18 That set of documents is now out for public
19 comment. That is the area recommendation report, and we
20 should be having comments within 90 days. We will look and
21 see how many comments we get there. If we get a manageable
22 number, we might have the report out by this summer, and if
23 we get an unmanageable number, we might not have it out
24 until sometime later, and we won't know until later on this
25 summer.

With respect to the MRS, we identified last April three sites in Tennessee, all of which were sites that you had been a party to considering and approving as acceptable sites for a reactor, and identified the former Clinch River site as the preferred site for an MRS and have now prepared a proposal and are ready to send that proposal to Congress.

At this moment we are enjoined from sending it to Congress by virtue of an injunction issued by the District Court in Tennessee. Yesterday we filed a motion to either dismiss or to stay the injunction and hope that the Circuit Court of Appeals, the Sixth Circuit Court, will act in an expedited manner, and we will be prepared to send a proposal to Congress within the next short while.

Additionally, in the President's '87 budget we have provided funding for the MRS should Congress choose to approve it by that means. It is an interesting legal, Constitutional procedural issue that we are dealing with now, and I hope that the MRS question will become a little bit clearer in the next few weeks.

Let me then leave for the moment the status of things. I think that is a fair, a quick picture of where we are, and note that in the handout that you have been handed there are two schedules, one related to the first and second repository which I have referred to, one related to an incremental schedule for MRS deployment, and at issue an

DAVbur

1 excerpt from the mission plan called Chapter 2, which deals
2 with the strategy of the program.
3 I think in view of the time I would refer you to
4 these for nighttime reading or some other time if you get a
5 chance. I do think the Chapter 2 discussion is a fairly
6 reasonable presentation of how we have looked at the
7 program.
8 Let me talk for a minute about how we are working
9 with the staff and reserve some time for questions. Soon
10 after I arrived, I had several meetings with the Commission
11 and the Commissioners and was very pleased to find the
12 Commissioners equally committed to seeing that this program
13 was carried out, carried out responsibly and technically
14 effectively and with high quality and on schedule.
15 We determined that the way we would attempt to
16 work would be that we would have our staffs work as
17 cooperatively together as we could during these early years
18 when there were no really formal Commission decisions that
19 have to be made.
20 In fact, in a literal sense the first
21 licensing-like decision does not occur until after the end
22 of this decade or early in the '90s.
23 On the other hand, we all recognize that we are
24 dealing with subject matter that is new and novel to some
25 extent, with a set of regulations that have not been tried,

DAVbur

both EPA and NRC regulations as well as our own rules, and that it was very desirable that our staffs work together in a cooperative mode, each recognizing the particular function that we had to serve and do that from the very beginning.

To that end, I had meetings of a management nature with the senior staff, John Davis, Bob Browning, and others from time to time, not for the purpose of making licensing choices but for the purpose of managing our resources, and have found this extremely productive. We do not have regular meetings. We do not have scheduled meetings. We meet when we have a need to meet.

In addition, we have countless public meetings between our staff and the Commission staff to review issues, to discuss activities that are upcoming, and we have found that very effective.

I would suggest that this would be something that you would find very valuable in your interaction with the Commission staff.

1 We have determined that we are going to try to do
2 something, since we have at the beginning of this process a
3 full recognition of what is ahead of us. We are going to
4 try to identify issues of significance in such a manner that
5 they can be resolved at a particular point in time in a
6 fully dispositive manner, which issues can be put on the
7 shelf, as it were. And when we come to licensing time in
8 the early '90s, these issues will have been resolved between
9 the Department and the Commission.
10 I think that is a very appropriate place for the
11 Staff and the Department and the ACRS to be literally and
12 specifically involved. I suspect we will be identifying
13 some of those issues as early as either next year or soon
14 thereafter, as we get into site characterizaton. I think
15 that that is a kind of a definition of the technical work
16 that may well fit the kind of work that the Committee and
17 its consultants and so forth has done.
18 I would suggest that in your deliberations as you
19 look at how we interact, that we kind of keep this in the
20 back of our mind. This is the kind of thing we are
21 plannaing to do with the Staff and with the Commission. In
22 fact, some of these matters we may even want to take to
23 rulemaking to fully and finally resolve before we get to the
24 time that our license is applied for or is timely to resolve
25 in a full, final and legal sense.

DAVbw

We have also determined between our two staffs that it is absolutely essential that we not get ourselves in an information base dichotomy. To that end, our two staffs have identified for and the procedures for developing what we would call a licensing support system, which is a highly automated, fully automatic, fully automatic data entry and data recovery system, which would be fully available to the public. We would enter our data, the Commission would enter its data and analyses, and hopefully, when we get to the time for legal discovery, there would be a system which every state, every attorney and everybody who had an interest in the program could turn to, and it would be this body of information upon which would rest our application and upon which would rest the judgment of those who are, in te end, making a judgment about the quality of the application.

I would think this is an area where you would want to have some cognizance and awareness, as we begin to put that in shape.

I have had several discussions with the Commission that will be subject of my thought processes, probably on the 27th, as we continue to make progress.

I think that the planning documents that I have referred to are certainly documents you would want to have in your library and which suggest that as we make

DAVbw

1 modifications to these document, although they do not
2 require formal Commission interaction and approval in many
3 cases, we want to keep you briefed as to what we were doing
4 and where we are. We'd certainly want to keep you briefed
5 about schedules.
6 I think, based on the kind of interactions we've
7 had with the Staff, that the Staff would certainly be an
8 appropriate interactive source that you would want to turn
9 to.
10 In a formal sense, we are required by the law to
11 report to the Commission every six months during the period
12 of characterization of the sites. I would suggest that
13 until other things come along that specifically direct our
14 attention together, that we use those six-month reviews
15 between us and the Staff -- perhaps us and the Staff
16 together, or in some way that you might find appropriate to
17 keep the Committee fully informed about where we are and
18 what we are doing.
19 I think I would conclude then my comments by
20 suggesting, I believe that the Committee could be of great
21 help. Awareness is perhaps the most urgent thing to have
22 you move toward. And direct interaction in the sense of
23 review and so forth, may be fairly generic for a period of
24 the order of a year or two and is beginning to move into
25 resolving these issues on a full and final basis. I think

DAVbw

1 the Committee's role becomes quite evident and quite
2 effective, and I would suggest that we start out in that
3 direction, if that makes sense.
4 With that, Mr. Chairman, I'll stop, and I know
5 somebody must have something they'd like to fuss at me about
6 or question me about in some way.
7 MR. WARD: Well, thanks, Ben. It's been very
8 informative. You've effectively kept everybody quiet for an
9 hour. That's a darn good record.
10 Why don't we let Dr. Moeller start.
11 DR. MOELLER: One of your statements, of course,
12 of your goals throughout the program, has been to interact
13 with the States. I know you've had many meeting with
14 various state groups, public groups, and yet apparently, one
15 of our common problems today is that the states are
16 challenging. Almost any time you make an announcement,
17 there is an uproar.
18 Is there any answer to this? Is there anything
19 -- are you changing your approaches to the States, as a
20 result of this or just doing more of the same?
21 MR. RUSCHE: I think that we have to try harder,
22 but I think if you look at the philosophical and poltical
23 background out of which this set of actions arises, that it
24 is not really surprising that we find the circumstances
25 being what they are. I started to be flip and say how would

DAVbw

1 you react, if we proposed to put the site on your campus or
2 in your backyard? I think you and I and all of us would
3 say, hey, you sure ought to look close. If not, you ought
4 to just look somewhere else.
5 That syndrome, I think, is not an act of
6 irresponsibility or even expected. I believe that all of us
7 may have hoped when we started that we would find a more
8 cooperative spirit, if I can use the term, developing toward
9 reaching this end, but I think if you look at the
10 institutional realities and the circumstances, that's not
11 very likely to occur.
12 Now in addition, things are different, depending
13 on which unit of government you look at. If you look at the
14 state which is designated as the principal point of focus
15 under the Act, you get one set of reactions. Most state
16 governments are located some distance away from the sites we
17 are talking about. If you talk to the local governments,
18 the cities, the counties, and so forth, you tend to get a
19 different shading of the reaction.
20 Perhaps at one end of the spectrum is the kind of
21 reaction we got from the City of Oak Ridge, Roan County and
22 Anderson County who, in effect, said we want MRS in our
23 area. We are convinced that it is safe and it would be an
24 economic boon.
25 We don't have quite that positive statement yet

DAVbw

1 emerging around the depository sites. But there is an axiom
2 that seems to have developed, that the outcry is
3 proportional to the distance from the site. That means you
4 have some outcry at the site, but the multiplier is
5 proportional to the distance at some power. So I think
6 there are several answers, Dr. Moeller. We must consult, we
7 must cooperate, and we must keep trying, but that if we
8 establish, as a test of success, that there be no objection,
9 we may have chosen the wrong test.
10 DR. SHEWMON: I now understand some of the
11 materials problems, which are basically corrosion, for the
12 first 1000 years or few hundred. One of the main factors
13 that influences corrosion is the temperature you have at
14 it. Thus one of the things one can control is whether it
15 sits in the utility cooling pond for three years or 30
16 before you try to put it under ground.
17 Is there anything in the Act that says that DOE
18 must be prepared to take this certain time out, or is that a
19 variable which you can't anticipate?
20 MR. RUSCHE: We sort of have latitude in
21 exercising it by virtue of the actual circumstances. Most
22 of the fuel, give the rate at which we would be able to
23 dispose of it is going to be at least ten years old, before
24 we can get our hands on it, and at least the first ten years
25 is probably going to be 25 years old. But I think the only

DAVbw

1 requirement now is in the Reorganization Act, which says
2 that we must be prepared to receive fuel as young as five
3 years old.
4 Isn't that right, Bill? I think that is the
5 case.
6 DR. SHEWMON: What is the Reorganization Act?
7 MR. RUSCHE: The Act which established the
8 Commission, the Energy Reorganization Act, which is a
9 precedent. But I believe in there, Congress decided at that
10 time in 1974, that disposal of high level waste was going to
11 be a nonmilitary activity. That is one point I did leave
12 out.
13 Let me just quickly state that the Act did cause
14 us to consider whether we would put defense high level waste
15 in the repository. We did study it and concluded that it
16 was entirely acceptable and a better choice economically and
17 the President agreed. And that is to be the course, as
18 well.
19 DR. REMICK: Along that line then, I assume, to
20 be available, the WIPP site. A demonstration of that might
21 help the acceptability just a few years down the road.
22 Would that be a demonstration of that? Would it help?
23 MR. RUSCHE: It might, but that is a facility and
24 a set of circumstances that are pretty different from what
25 we are talking about here, not so different physically, but

DAVbw

they are different institutionally. They are not a part of this program. They are not subject to much of the things we are talking about. Don't need to be. To that end, they do introduce a dichotomy, as well as a potential value. I think doing it will certainly have some value.

DR. CARBON: What is the rationale for putting it in the WIPP site?

MR. RUSCHE: WIPP is for the disposal of defense true waste, which is waste that comes out of the weapons program specifically, which we did not have a place to put otherwise.

DR. CARBON: But all defense waste is going in there?

MR. RUSCHE: High level defense waste.

DR. SIESS: Ben, DOE has been exploring a salt depository. Is that some other kind of waste?

MR. RUSCHE: That is the WIPP facility we are talking about. It is for transuranic waste, specifically. It was adopted by Congress as an approach to give confidence that we would not run into a problem in the weapons development program. It is excluded from regulation. It is internally regulated.

DR. SIESS: Another question on siting.

If an Indian tribe were willing to accept the respository, could the state surrounding that veto it?

DAVbw

MR. RUSCHE: I believe that the prevailing law would depend upon the state of the treaty between the Indian tribe and the Federal Government. In some cases, those are coequal or colocated, and in some cases they are absolutely separate. I think the final answer would depend on the nature of the treaty. We are obligated to work with both, as if they are separate and independent entities.

DR. LEWIS: I just want to ask one question.

First of all, let me congratulate you on a virtuoso performance. You are well on the way to running for president!

(Laughter.)

MR. RUSCHE: Thank you, Harold.

DR. LEWIS: You mentioned Oak Ridge as a place that loves and wants the MRS. I spent a couple of days at Oak Ridge about a month ago, and I was set up as a patsy to debate the editor of the Nashville Tennessean, a person whose view I have not doubt you are acquainted with. I had the feeling that the support for the MRS was eroding, even in Oak Ridge, because there has been a steady patter of anti-MRS stuff. I don't want to talk about that local issue, but that raises the question that everybody knows. There has been a great deal of hatred for high level nuclear waste out there in the country, and many of us realize that much of it is irrational.

1 Do you feel that the level of conservatism that
2 you are exercising in your program of characterizing the
3 sites, doing designs and so forth, is what is prudent for
4 the United States, or are you driven to excessive
5 conservatism for reasons of generating some acceptance of
6 the repository? And if you give the second answer, can you
7 put a factor on it?
8 MR. RUSCHE: Ooh.
9 MR. WARD: Or would you rather duck the
10 question.
11 MR. RUSCHE: This might be the subject for a
12 small meeting sometime, but let me just make a general
13 comment.
14 DR. LEWIS: If you're gonna be president, you're
15 going to have to learn to duck questions.
16 MR. RUSCHE: I've ducked a few. I think the
17 guidelines, which are the principal technical basis, coupled
18 with 40 CFR 191 and 10 CFR 60, your guidelines or your
19 rules, form an entirely valid basis for siting safely and
20 with full consideration of public confidence and public
21 safety. Maybe I shouldn't say "confidence." I think it is
22 in the confidence area where your question tends to go.
23 DR. LEWIS: That's correct.
24 MR. RUSCHE: I think if we meet the guidelines,
25 meet the rules, there's just no question from any rational

1 standpoint that the public would be protected.

2 We probably are spending extra money to gain

3 extra confidence, and we are out on the very flat portion of

4 the curve.

5 DR. LEWIS: Thank you.

6 MR. WARD: Ben, a question aloang those line. 1

7 mil per kilowatt hour. That is an awfully round number. If

8 we were on a different monetary system or measurement

9 system, the funding for the program could be at some

10 signficantly different level. Does the law provide for, you

11 know, at some point in the program, adjusting that rate?

12 MR. RUSCHE: Yes. The law provides, first, that

13 the program must be self-funded, and it starts with the 1

14 mil per kilowatt hour fee. We are obligated every year to

15 make what we call a total life cycle cost estimate and an

16 adequacy of the fee estimate. Our next report will go up in

17 two or three weeks and it will show that the 1 mil per

18 kilowatt hour fee, coupled with the one-time obligation is

19 certainly adequate through the end of this decade. And

20 depending on what inflation rates might be and a number of

21 other factors, we may have to adjust it.

22 We are authorized, if the needs arises, to either

23 do one of two things. We will either tell Congress that we

24 that we need more than one bill, in order to maintain

25 solvency, or we are authorized to borrow with a certain

DAVbw

1 borrowing authority, and then report to the Congress that we
2 have borrowed.
3 We actually have to have the authority preagreed
4 upon for appropriations considerations. Then the Congress
5 would, in effect, raise the fee to compensate for that
6 borrowing. So it is totally self-funded.
7 DR. CARBON: This 1 mil is like a percent or
8 percent and a half. Does this put the high level waste into
9 the ground? What I am saying is, some utility will have a
10 shift in fuel. Will they pay a lot more? Where do their
11 expenses stop?
12 MR. RUSCHE: As long as they generate the fuel,
13 as long as they generate the waste, they pay the fee. The
14 fee is currently estimated to be adequate for disposal of
15 all of the waste that would be generated by all of the
16 reactors that we now envision will be a part of the system.
17 If we have a resurgence of new reactors come on line in the
18 early part of the 2000s, say, I think we'd have to visit
19 that issue with respect to funding, in that those reactors
20 would have access to major capital investments that would
21 have been paid for by others, and I think that is a matter
22 that is far enough in the future that we can't do much about
23 it now.
24 DR. CARBON: But generally, this takes care of
25 it?

DAVbw

1 MR. RUSCHE: It takes care of everything,
2 including decommissioning and a perpetual care fund. The
3 total life cycle estimate that we put to Congress will be
4 between $25 billion and $32 billion in constant 1985
5 dollars. That includes the MRS.
6 MR. WARD: Anything else?
7 DR. LEWIS: Just a quick one on the
8 comprehensiveness of your planning.
9 There was an article published in 1960 in a
10 woman's magazine that predicts that the world will come to
11 an end in the year 2026.
12 Do you have a contingency plan for handling that
13 eventuality?
14 MR. RUSCHE: We hope to maintain retrievability
15 on the Commission's rules for up to 50 years, and whoever is
16 doing it then can make his own mind up.
17 (Laughter.)
18 MR. RUSCHE: We will not have made irrevocable
19 decisions by that time.
20 MR. WARD: Okay. Ben, thank you very much. I am
21 certain we will be seeing you and your colleagues in the
22 future, and we wish you well with the program.
23 MR. RUSCHE: May I thank you all for the time of
24 day. It is a pleasure to get to see some of you, many, all
25 of you, I think, except one or two I have known. I see

DAVbw

1 Carson's here. I haven't seen him in a while. It is a
2 pleasure.
3 MR. WARD: He's been out working.
4 MR. RUSCHE: I am glad to see you all, and we
5 would like to work together. I think that the kind of
6 approach I have suggested has merit and any time you need
7 something, you'll certainly find we will be responsive and
8 cooperative. We need your help.
9 MR. WARD: Thank you.
10 Let's take just a short break, five minutes, and
11 come back for Mr. Ebersole.
12 (Recess.)
13
14
15
16
17
18
19
20
21
22
23
24
25

MR. WARD: Our next topic is the report of the Reactor Operations Subcommittee. I will ask Mr. Ebersole to give it.

MR. EBERSOLE: On Wednesday we had in the afternoon or afternoon and evening a report from the staff and others of about 10 or 11 events, out of which we screened really just three.

And I will tell you in advance that we are going to have a curtailed program here in order to save a little time.

Out of the 11 events, we picked these that I am going to just mention:

The McGuire event, which is a startup of a degraded HPSI system. Some of the problems here are somewhat analogous to the troubles recently at Paloverde.

We have a matter that we learned about at Turkey Point, which was certain stop check valve failures that are quite related to the SONGS report that we had on the stop check failures the other day.

We have a rather disturbing story to tell you about the ANO 1 case. It appeared for a time that they ran without -- and it was not a complete design failure -- or rather it was a design inadequacy in that the aux pumps had somehow been designed and installed and ran for quite a while with no reversible checks and thus were potentially

DAVbur

1 confronted with the loss of steam due to any event that
2 could lose steam on these lines which were so connected.
3 The last we are going to talk about is the
4 proposed technical specification improvement programs, and
5 Ron Hernan is going to cover those for that.
6 MR. HERNAN: No, Ed Butcher will cover that, the
7 manager of the tech spec program.
8 MR. EBERSOLE: On the McGuire 1 event, are you
9 going to cover that with slides or anything?
10 MR. HERNAN: Yes, Mr. Gitter.
11 MR. EBERSOLE: We can start with that and run
12 right through this. This is the startup with the degraded
13 HPSI system.
14 I want you to notice the similarity between this
15 and the event that we talked last session about at the San
16 Onofre plant.
17 MR. ALLISON: Mr. Ebersole, my name is Dennis
18 Allison. While Joe is getting ready to start, I would like
19 to make a couple of comments.
20 You remember the subcommittee meeting. The
21 subcommittee had quite a few questions about what the
22 operators had done and why they had done it, and how could
23 they come to make this apparent mistake.
24 We are not really going to be in a position to
25 answer most of those today because we haven't really had

any considered formal answers from the licensee. Those won't come till enforcement comes.

So what we have had is conversations with a few people at the licensee who have been willing to talk to us, but we can't really tell you how the operators did this or why.

MR. EBERSOLE: I would just like to call out to the full committee that we bring these operating events to you for the purpose of maybe you picking up some observations that would be useful to transmit to the staff on a more or less generic basis, if not just to bring the specific events to you, to describe them.

So whatever you can pick out of here, let me know.

Go ahead.

MR. WARD: Jesse, could I interrupt just a minute?

You are scheduled to run with this part of the meeting till 6:15?

MR. EBERSOLE: I don't think I will have that amount of time.

MR. WARD: For the convenience of the members, maybe we could estimate.

MR. EBERSOLE: I am going to estimate no more than half an hour for the whole thing.

MR. HERNAN: Plus a half hour for the tech spec discussion. We didn't even go over the tech specs. So that will be a separate item.

MR. WARD: Would you say then, Ron, certainly inside of an hour?

MR. HERNAN: Yes.

MR. WARD: About an hour? Okay. Then we have 15 minutes or so or perhaps half an hour.

DR. KERR: You did say 45 minutes, didn't you?

MR. EBERSOLE: I am going to guess that we are going to take less time than is presently scheduled.

MR. WARD: Is something going on tonight?

MR. EBERSOLE: Let's move it.

MR. GITTER: My name is Joe Gitter, with the Office of Inspection and Enforcement, in the Events Analysis Branch.

At the full committee meeting on January 9th, I discussed a failure of the instrument air system, a single failure, that resulted in a trip of both units and a safety injection of Unit 1.

Today, what I would like to do is to discuss a set of conditions that existed the following day, when Unit 1 attempted to restart.

(Slide.)

The problem was failure to repair the VCT

DAVbur

1 isolation valve motor operators prior to startup, which
2 would have prevented the VCT isolation on an SI signal.
3 The safety significance of this is that HPSI may
4 not have functioned as required on a real left side demand.
5 Recall that about 6:40 in the morning on November
6 2nd a loss of instrument air, of which the instrument air
7 system is shared by both units, caused both units to trip
8 and safety injection in Unit 1. The VCT isolation valves
9 closed as required on a safety injection signal.
10 Recall that the section is swapped over from the
11 VCT to the refueling water storage tank.
12 (Slide.)
13 These valves would close. These valves would
14 open.
15 (Slide.)
16 On this particular event, the VCT isolation
17 valves did close as required. However, the motor operators
18 to those valves were found burned out.
19 The reason they were burned out, there are
20 several theories that the licensee has right now, but right
21 now they are still in the process of investigating the exact
22 cause.
23 Now, what happened is prior to startup the
24 operators manually opened those valves, but they did not
25 prepare the motor operators. This put them in a position

that if there was a real left side demand those valves would not have automatically closed. That would have put them in a situation where the charging pumps would have been taking suction from the refueling water storage tank and the volume control tank.

They did start up at 6:00 o'clock the next morning. The unit was in Mode 2 for about six hours. They had to go to cold shutdown because of a severed instrument fitting on the secondary side of the steam generator, and while in cold shutdown they did repair those valve motor operators.

Now, there are two major concerns with operating in this configuration, taking suction from the refueling water storage tank and the volume control tank.

The first is that the boron concentration would be less than that assumed in the safety analysis. This is really a minor concern because the volume of the volume control tank is on the order of several thousand gallons; whereas, the volume of the refueling water storage tank is on the order of several hundred thousand gallons.

The major concern is the possibility that if the charging pumps initially take suction from the volume control tank that this level could come down and eventually nitrogen or hydrogen could become entrained in the charging pump suction, ultimately resulting in gas binding of the

1 charging pumps.

2 When they issued the LER on the loss of

3 instrument air, they did not discuss the failure of these

4 motor operators. It wasn't until the resident inspector,

5 going back and reviewing the loss of instrument air event,

6 looking through shift supervisor logbooks, looking at the

7 trip report, caught some anomalies and went to investigate

8 those anomalies and found that this condition did exist.

9 Soon after the residents found that this

10 condition did exist, the licensee phoned the operation

11 center and made a 5072 report of the degraded HPSI system

12 during startup. That was on 1/14/86.

13 At this point in time we have an enforcement

14 conference scheduled for February 28th. Mainly, the

15 questions that were raised at the subcommittee meeting were

16 very good questions, and those are all questions we intend

17 to pursue at the enforcement conference.

18 That is all I have. Are there any questions?

19 MR. EBERSOLE: Any questions?

20 (No response.)

21 MR. EBERSOLE: Item No. 2 is the Turkey Point

22 event, which is rather closely related to the matter we

23 talked about on SONGS with reference to check valve failures

24 due to partial flow conditions, this time from a very small

25 flow source, from a leaking valve, valves which were

1 supposed to be virtually leak tight.

2 I would like to have the presenter identify the

3 difference between a stop check valve and a flow check

4 valve, such as we had on SONGS.

5 MR. KIESSEL: I am sorry?

6 MR. EBERSOLE: This is the case of the Turkey

7 Point stop check valve.

8 MR. KIESSEL: Yes, sir.

9 MR. EBERSOLE: I would just like to have you

10 point out the distinct differences between a stop check

11 design and a flow check design.

12 MR. KIESSEL: I can try.

13 (Slide.)

14 My name is Dick Kiessel, with the Engineering and

15 Generic Communications Branch in the Office of Inspection

16 and Enforcement.

17 I am here to discuss a series of check valve

18 failures at the Turkey Point Units 3 and 4. These failures

19 stemmed over a period of late November and then again in

20 early January.

21 The safety significance of these check valve

22 failures are twofold.

23 First, at Turkey Point the check valve failures

24 could have resulted in loose parts which could have

25 endangered mechanical equipment further downstream, thus

1 preventing steam flow to the aux feed systems.

2 The check valves themselves could have hung in a

3 partially open position, thus limiting steam flow to the aux

4 feed pumps.

5 And the third possibility is that if there had

6 been a degrade steam generator or a pipe break upstream of

7 these valves and the valves had hung open, then we could

8 have had an uncontrolled release of steam, thus again

9 limiting steam flow to the aux feed system.

10 On a more generic nature, though, this is another

11 example of what can happen to check valves when they are

12 subjected to low flow conditions.

13 In this case the manufacturer of the valves

14 recommended that they not be used in conditions where they

15 see less than 10 percent flow. The flow that they did see

16 was leakage flow through an MOV that these check valves sat

17 on either side of. The flow was enough that in November one

18 valve was discovered to be broken. They then X-rayed the 11

19 other valves and found two more that were broken.

20 After repairing the valves and going back into

21 operation in January, they again discovered that one of the

22 valves had broken. They X-rayed again and found three more

23 that were broken, so that in the first episode we had three

24 out of 12 failures, in the second episode we had four out of

25 12 failures.

DAVbur

In addition, there was evidence of mechanical damage to the remaining valves.

Although the generic implications of this phenomenon were addressed in Information Notice 8609, it also harkened back to a previous episode where the swing check valves in the steam exhaust lines from the HPSI and RCIC were damaged because of low flow conditions.

Here the low flow was caused by running the pumps during test loads when they were seeing much lower than normal flow. That was addressed in Information Notice 8226. As I mentioned, this was also mentioned in the most recent Information Notice 8609.

During the subcommittee meeting, I was asked a number of questions, the general thrust of which were of the nature to reconfirm with the utility that we were in fact talking about stop check valves -- and, yes, they are stop check valves.

Two, were they the stop check valves in question that we thought they were? Yes, they were.

Three, why didn't the P&ID that I used show them the stop check valves?

(Slide.)

This is the P&ID that was used. The answer that I received back from the utility was that this is not the formal P&ID. This is a logic P&ID, and there are omissions,

1 or that it is not exactly a correct P&ID.

2 I checked the P&ID that they indicated as being

3 the official one that we should have and also the FSAR

4 version of the drawing, and they both show that the valves

5 in question are in fact stop check valves.

6 MR. MICHELSON: It is a very strange

7 nomenclature.

8 MR. KIESSEL: Again, this is more than just a

9 check valve. It also has stop features so you could turn

10 the handle down and close it.

11 MR. MICHELSON: Is it also true that all the

12 other gates shown on that are stop checks, or do you know?

13 MR. KIESSEL: I don't know about those. The only

14 ones that I am familiar with --

15 MR. MICHELSON: Okay.

16 MR. KIESSEL: If you take just a second, I do

17 have the full P&ID here.

18 MR. MICHELSON: I don't think it is that

19 important. I am just very surprised.

20 MR. KIESSEL: No, sir, they are shown as

21 conventional gate flow valves.

22 MR. MICHELSON: The only ones that are stop

23 checks are those that are circled in your drawing?

24 MR. KIESSEL: It would be this bank here of six

25 and this bank here of six. The ones that are circled are

the four that were found. Two have failed in January.

MR. MICHELSON: Further over to the right, those are not stop checks?

The number one there. Yes, those.

MR. KIESSEL: This would be a check valve, and this would be a conventional gate valve.

The final question, as I understood, from the subcommittee was: why did they use stop check valves?

In talking with the utility, the answer I received was that they used stop check valves because they needed the stop feature and check feature and it was more economical to do it in one valve.

The reason for the stop feature was to provide isolation around this MOV.

The reason for the check feature was in case of a degraded steam generator or a line break upstream that it would have automatic stopping capabilities of reverse flow and thus tend to protect the steam supply to the aux feed pumps.

Now, the question was asked: what is the difference between the stop check and the swing checks that are at San Onofre?

(Slide.)

Here is a sketch of the stop check at Turkey Point.

DAVbur

This is the stop check valve that failed at Turkey Point.

At first blush it appears to be a conventional flow valve with one minor difference. This stem is free to move up and down without physically pulling the disk off the seat.

It is flow in this direction that lifts the disk off its seat and allows flow in the forward direction. Reverse flow of course coming down on top of the disk would close the valve.

Conventional swing check valves in about this, you would just put a large flapper in the line. Flow in the forward direction would lift the flapper up out of the way. No flow or flow in the reverse direction would allow the flapper to fall back down and seat.

MR. EBERSOLE: But by its very nature this is susceptible to low flow such as for a leaky valve?

MR. KIESSEL: So is the swing check.

MR. EBERSOLE: But this is normally gravity seated?

MR. KIESSEL: So is the swing check.

MR. EBERSOLE: Well, yes.

MR. KIESSEL: Both types of valves are subjected to low flow problems.

MR. EBERSOLE: Right.

1 This is normally seated of the upstream valve is
2 tight.
3 MR. KIESSEL: It would be sitting on it. It
4 would not be seated the way that you would think of a valve
5 that had normally been closed, as seated.
6 MR. EBERSOLE: In any case, the disease is the
7 same. Low flow in both valves.
8 MR. KIESSEL: Yes, sir. Low flow in the
9 neighborhood of 5, 10, 15 percent.
10 MR. EBERSOLE: That is the gist of this event,
11 and there's no plants at the moment other than to replace
12 these; am I correct?
13 MR. KIESSEL: That is correct. There is a total
14 study on the part of the utility of the entire question of
15 the aux feed system, and they are looking at the long-term
16 solution to come out of that study. The immediate study is
17 to beef them up with stronger materials. The failure point
18 was where this guide attached to the disk, and they feel
19 that by going to stronger materials that they will be able
20 to minimize the damage, and that it will not reoccur in the
21 foreseeable future; however, they have committed to a
22 program of, shall we say, enhanced monitoring of the valves
23 and using X rays to verify that this fix is giving them some
24 additional life.
25 DR. SIESS: Is this unique to Turkey Poin t?

MR. KIESSEL: This valve?

DR. SIESS: Yes. It's the stop check.

MR. KIESSEL: The stop check is not unique to Turkey Point.

DR. SIESS: Does everybody use a stop check valve where they want both functions, but some of them use a swing check valve in parallel?

MR. KIESSEL: It would be strictly up to the utility. The economics would say to use a single valve.

MR. MICHELSON: One of the controlling parameters is pressure drop. This type of valve has a very high pressure drop.

DR. SHEWMON: You mean it will tolerate one?

MR. KIESSEL: No, it causes one.

MR. MICHELSON: It causes a very large pressure drop, so you've got a lot of pressure to throw away. it's okay. If you don't, then you have to use a check valve and a swing valve.

DR. SIESS: Well, this is fairly common.

MR. REED: It is not common in my experience. I have never used it. It is a cheaper installation.

MR. MICHELSON: It has become reasonably common in some reactors, because of the need to do certain kinds of testing, where you have to gag the check valve for other reasons. Then it is handy to have.

DR. SIESS: I think he said this was to isolate that low valve for maintenance, was it?

MR. KIESSEL: Yes.

MR. MICHELSON: That alone, you'd use a gate valve for. You notice they've got some other check valves in the system, so I don't know why they needed more, unless they were having some sort of leakage.

MR. KIESSEL: In going back and looking at the system a little more closely, I think I might be able to answer on some of them.

(Slide.)

If I were to have a degraded steam generator upstream of here or a line break, I need these to act as check valves to give me immediate closure. The steam generator would be up here. If I am trying to provide steam flow, though, to the turbines from the A and B steam generator, from the A steam generator, I don't have any problem. From the B steam generator, though, it comes right into the same line. Therefore, I could lose two out of my three aux feed pumps, until such time as I can get an operator down there to close this valve manually. The alternative is to pray that this motor-operated valve is going to function properly. Without that, I don't have it. it.

MR. REED: You solve that problem by putting more

check valves in the juncture.

MR. KIESSEL: You mean here?

MR. REED: Yes. On this side of the existing gate valves for isolation of the control valve.

MR. KIESSEL: Yes.

MR. REED: I look upon it as a poor application and more utilization of the valve. That is what we are seeing here. Poor selection, poor applications, the fact that industry and Carl Michelson are going to straighten all this out.

MR. EBERSOLE: That is the intent to bring your attention here to these valves as well as the SONGS valve. These applications, or whatever you want to call them, and to have you qualify what we might say about this. We are going to see another one here very shortly, which will be of great help, which would be no valves at all.

Any further questions on this particular topic? We only brought it to you to reinforce the need for more careful consideration of valves that act as check valves.

Ron?

(No response.)

MR. EBERSOLE: Thank you.

The next one is, of course, the ANO-1 case. Do you have slides on that?

MR. HERNAN: Yes, I have the slides of the

1 DAVbw

1 system.

2 MR. EBERSOLE: I think if you just put the slides

3 up there, we can talk about it for about five minutes, and

4 we will be done.

5 (Slide.)

6 It is just sacreligious. What you would like to

7 see is an aux feed pump turbune, the bottom turbine at the

8 bottom, which is one source of two sources in toto of aux

9 feed system at the ANO-1 plant. I remind you that ANO-1, it

10 is one of the B&W plants thats operates virtually dry, and

11 in its configuration as modified after the TMI 2 fix, that

12 turbine input line has no swing checks at all to provide

13 continuity of flow on a steam supply.

14 Put that one on, Ron, and then you can take it.

15 MR. HERNAN: I would like to point out the basic

16 problem. The supply to the turbine-driven feed pump can

17 come from either steam generator. The problem is that if

18 you have a postulated pipe break, say, at this point here,

19 you could possibly lose your steam to that steam-driven

20 emergency feed pump, and you presumably blow both generators

21 down to that break. As Jesse pointed out, it wouldn't

22 necessarily have to be a break, it could be a safety relief

23 valve. The point is that you would lose steam to the

24 turbine-driven pump.

25 The glitch is, if you look at the other diagram,

DAVbw

1 this is the hydraulic of the actual feed.

2 (Slide.)

3 If you look at the feedwater portion of the

4 diagram, you can see that the electric-driven pump is driven

5 by the red emergency bus. So if you postulate that steam

6 break in conjunction with losing the red 1-E bus --

7 (Slide.)

8 -- then you have lost both emergency feedwater pumps.

9 So to fix it, what they did was put in the check

10 valves that should have been there in the first place.

11 This is the corrected system design.

12 MR. EBERSOLE: This raises the aux feedwater

13 supply to the minimum standards. It is now redundant, in

14 fact. It can tolerate a failure, whereas formerly, it was

15 dead in its tracks, and you all know how long we can survive

16 without aux feedwater, not long, indeed.

17 Now Ron, I don't know if you can make any

18 observations how it can be that we can have the nonpresence

19 of these reversible checks for so long a time without

20 anybody in that whole organization noticing it.

21 MR. HERNAN: I don't know how the original design

22 missed that point. I guess, to be complete, we should say

23 that when Arkansas came in to upgrade their emergency

24 feedwater system after TMI, the design they proposed to the

25 Staff did have these check valves in, but the as-built

DAVbw

1 system did not. So somewhere between their presenting the
2 design for our review and building the system, the valves
3 were taken out, presumably under 5059. So I think it shows
4 there were some questions on the 5059 process.
5 DR. SIESS: You say take the valves out?
6 MR. HERNAN: They were taken out of the design.
7 The valve physically, were never put in.
8 DR. SIESS: Are you going to show that they were
9 taken out of the design rather than left out?
10 MR. HERNAN: The prints that were submitted to us
11 show that they were in the design when they were submitted.
12 I believe the prints that the I&E inspection team that found
13 the problem showed the valves not in the system.
14 MR. MICHELSON: Did the unreviewed safety
15 question determination indicate any justification for
16 removal? There must have been a 5059 determination that it
17 was all right to take them out. I wonder if the inspectors
18 had gone back and looked at that?
19 MR. HERNAN: I can't answer that. That certainly
20 should have been part of their audit.
21 MR. MICHELSON: That is the justification for
22 removing them.
23 MR. EBERSOLE: You know, it is just like Greeley,
24 though, when you look at the steam supply for an aux feed
25 pump like that, you have two checks. They had to, but they

DAVbw

1 got left out. And how that glitch took place is a great
2 mystery.
3 DR. SIESS: He said not left out, taken out.
4 MR. EBERSOLE: I mean taken out, and then the
5 thing sat there and ran for how long?
6 MR. HERNAN: Two years or something like that.
7 MR. EBERSOLE: And it could not pass. And this,
8 of course, is a critical aux feed supply. I offer this to
9 you with all the kind of things we have about failure rates
10 of aux feed supplies and PP's.
11 MR. WARD: Wait a minute. It couldn't pass a
12 single failure criterion.
13 MR. EBERSOLE: For a single failure criterion,
14 you have to be able to detect some hydraulic problem almost
15 like a steam line break.
16 MR. WARD: But the emergency feedwater system as
17 a whole could tolerate that single failure.
18 MR. EBERSOLE: No, it could not.
19 MR. WARD: How does it lose the electric drive?
20 MR. EBERSOLE: It failed to answer when you had
21 loss of pressure in the steam line.
22 MR. WARD: You are talking about two failures.
23 MR. EBERSOLE: But the single failure criterion
24 is, I suffer a transient or accident of whatever, and I ask
25 the system to perform in the presence of an existing

DAVDW

1 failure. It cannot pass that.

2 DR. SIESS: Jesse, do you think it would have

3 been harder to make this mistake, if they had three aux

4 feedwater trains?

5 MR. EBERSOLE: Yes, I think it would have been.

6 I don't believe they could have missed it then. It makes

7 you nervous when you see two trains, and you see this sort

8 of thing.

9 MR. REED: In answer to Chet's question, if you

10 had three trains, and two were electric and one was steam,

11 this thing would still happen.

12 MR. EBERSOLE: No, you would have a green bus and

13 a red bus.

14 MR. REED: We assume station blackout now.

15 MR. EBERSOLE: No, not station blackout.

16 MR. REED: So the station blackout then --

17 MR. EBERSOLE: No. That is hitting it too hard.

18 DR. KERR: It is not a design basis accident

19 yet.

20 MR. EBERSOLE: This was a single failure either

21 due to the nonpresence of a working system or its failure

22 on that. It is not another compound failure. It is a

23 reasonable basis for a failure analysis. We bring this to

24 you here just to let you see how long such an obvious, and

25 to me, a terrible state of affairs can stand in the presence

DAVbw

1 of what is supposed to be newly competent operators and an
2 engineering force.
3 DR. OKRENT: A severe accident policy statement
4 assures us that they're safe.
5 MR. EBERSOLE: And this is the B&W boiler.
6 MR. WARD: That's not quite fair, because it
7 doesn't express concern about outliers, and it says, in
8 fact, that's, in fact, would should be concentrated on.
9 DR. OKRENT: That concern was expressed only over
10 our dead bodies, and it wasn't in the original draft.
11 MR. EBERSOLE: Ron, I am a little bit bothered
12 about the absence of something being brought down on the
13 operators as a result of the existence of these conditions.
14 MR. HERNAN: The inspection report has not been
15 issued yet. I understand that I&E is considering a severity
16 level 3 violation. I am not sure. I don't believe that
17 carries a civil penalty.
18 DR. KERR: Is there some way that we can make
19 certain that this sort of thing doesn't occur in the rest of
20 the plant in more places?
21 MR. HERNAN: You mean in other systems in that
22 plant?
23 DR. SIESS: Or other plants. What is the root
24 cause?
25 MR. HERNAN: I guess the root cause is inadequate

DAVbw

1 engineering design control, both when the plant was
2 originally built and when the upgrade was made.
3 MR. EBERSOLE: This is such a terribly obvious
4 need.
5 DR. MARK: If they filed a 5059, and the Staff
6 received it, but didn't read it, who would the violation be
7 then?
8 MR. HERNAN: 5059s are not filed individually.
9 The packages are maintained at the plant, and in the summary
10 of all of them over a four-year period, it goes to the NRC
11 once a year.
12 DR. KERR: It seems to me important to fix blame
13 I would be much more interested in trying to find other
14 situations to change, more so, almost than in trying to fix
15 blame and beat people over the head. Head beating is okay,
16 or beating some other part of the anatomy, but it is not
17 going to make the plant any safer.
18 DR. SIESS: Is there anybody at the plant that
19 remembers why they took the valves out of the design?
20 MR. HERNAN: I don't know the answer to that.
21 MR. MICHELSON: It has to be documented, and it
22 has to be retained.
23 DR. SIESS: It seems to me that is the issue.
24 Why did they do it? Were they told to do it? Was there
25 some reasons for doing it? Was it wrong? Somebody else

DAVbw

1 might make the same mistake?

2 MR. HERNAN: The rationale that was explained

3 here, the project manager explained to the Subcommittee, is,

4 that they had the check valves in one of their other units.

5 I guess, ANO Unit 2 in the same location. They had a lot of

6 maintenance problems with the check valves. So it sounds

7 like they went through some kind of rationale, but they

8 overlooked the possibility of this postulated failure.

9 MR. WARD: Wait, that is ANO Unit 2. That was

10 later plant.

11 MR. HERNAN: Yes.

12 DR. SIESS: This was a late modification.

13 MR. HERNAN: The modification, the upgrade of the

14 feedwater system was only a few years ago.

15 DR. SIESS: That suggests that all these check

16 valve failures might inspire somebody else to go out and

17 take the check valves out, and if there is a whole rash of

18 that, are you worried about design controls too?

19 MR. EBERSOLE: What shakes you up is the apparent

20 laxity or lack of discipline. Was this subjected to a

21 standard review after the modification by the Staff?

22 MR. HERNAN: No. I take that back.

23 MR. EBERSOLE: How did this escape Staff

24 detection?

25 MR. HERNAN: It didn't. The Staff caught it.

1 DAVbw

MR. EBERSOLE: But after two years.

MR. HERNAN: I am not sure of the review process, after the upgrade is installed. We did review the design and issue a safety evaluation report on the design. As far as catching it, catching this error, after we reviewed the design at NRR, I don't know what the process is, or if there is one.

MR. REED: I would just like to take this occasion to be repetitious on an issue which I have talked about before. Here is just another example of auxiliary feed for some PWRs, which in itself is a complicated system, subject to water hammer and check valves and no check valves, and all kinds of things. This auxiliary feed system depends on six or eight other systems to provide decay heat removal capability.

Again, I would like to say that there are some reactors that appear to me to have vulnerabilities with respect to utilization of this six or eight systems, including aux feed for removal of decay heat.

DR. SHEWMON: They probably didn't choose their engineers very well.

MR. EBERSOLE: That is just another way that you are hammering in for dedicated single train.

MR. REED: Yes.

MR. EBERSOLE: Here is another one. Any further

DAVbw

1 questions on this situation here?

2 (No response.)

3 MR. EBERSOLE: If not, the last item of the day

4 -- is it going to be Mr. Allison?

5 MR. ALLISON: Mr. Butcher.

6 MR. EBERSOLE: Mr. Butcher is going to take up

7 the technical specification and improvements

8 About how long is this going to take?

9 MR. BUTCHER: I think we can get through it in

10 half an hour. We can move through it as fast as you would

11 like.

12 MR. HERNAN: There is a separate handout on this

13 presentation. There is some information on the subject in

14 the overall handout on the operating events, but it is

15 abbreviated. The separate one, I guess, Mr. Alderman has

16 passed out.

17

18

19

20

21

22

23

24

25

DAVbur

1 MR. BUTCHER: I would like to start off by
2 introducing myself and Sam Bryan, who is at the podium
3 there.
4 My name is Ed Butcher, Chief at the newly formed
5 Technical Specification and Coordination Branch in the
6 NRR --
7 (Slide.)
8 -- in the Division of Human Factors Technology.
9 Sam Bryan was the Assistant Director for the
10 Technical Specification Improvement Project, which rounded
11 up its activities earlier this year. I guess it was last
12 year, September of last year.
13 The Technical Specification Improvement Project
14 has two phases. We will speak to both of them today. We
15 will try and move as fast as we can to get through it.
16 As you are aware, tech specs are very complex
17 documents, and so is the program that we had in line to make
18 some reforms in that document.
19 Phase 1 of the program was a rather extensive
20 effort to study all the particular problems and perceptions
21 of problems that both the NRC and the industry had regarding
22 technical specifications.
23 There was a team of individuals put together to
24 study that last year. I believe they studied it for about
25 six months. As I said, Sam Bryan was the Assistant Director

DAVbur

1 of that project.

2 Phase 2 of the Technical Specification

3 Improvement Program is the implementation phase, where we

4 will attempt to take the recommendations of the Technical

5 Specification Improvement Project report and test them for

6 practical application and attempt to actually make some

7 needed improvements to the type of specification.

8 Sam will start off this evening and discuss the

9 results of the report, and then I will follow with a

10 discussion of ongoing activities and what we anticipate

11 for the future.

12 We are trying to cover this in a very overview

13 sort of perspective, I guess, under the assumption that if

14 you have any specific areas that you wish to put greater

15 detail in you can come back to it at a later date.

16 Sam?

17 (Slide.)

18 MR. BRYAN: If I can integrate all these wires

19 and slides on the podium.

20 What established the need for TSIP, the Technical

21 Specification Improvement Project?

22 Henceforth, I will use TSIP to refer to that

23 project.

24 We had heard complaints about too many

25 specifications, less important ones, thus distracting from

1 the more important ones. There were complaints about the
2 size and complexity of tech specs.
3 Presently, the tech spec document contains 5- to
4 600 pages. Just finding where you want to be or need to be
5 in the tech specs is sometimes difficult.
6 The industry availability record is low compared
7 with that of some foreign reactors having far fewer tech
8 specs. Their impact on this availability was questioned.
9 We have had complaints that tech specs are not
10 operator oriented, tech specs are written by engineers for
11 engineers to solve licensing problems, and they are placed
12 in the control room for the operators to follow them but
13 weren't written with him in mind.
14 And the findings of NUREG-1024, technical
15 specifications enhancing the safety impact. This report
16 identified several problems associated with surveillance
17 testing and with equipment out of service time.
18 So we were chartered to reconsider the entire
19 area of tech specs, including philosophy, scope, depth,
20 content, how to incorporate it into licenses, how to
21 implement it by the licensees, and how to enforce it by
22 NRC.
23 A couple of points about TSIP. We had an
24 advisory group chaired by Mr. Eisenhut comprised of ten
25 management level people from six different NRC offices. It

DAVbur

1 included Mr. Glenn Reed of this organization, who had
2 several meetings with this advisory group, and we obtained
3 excellent advice from him.
4 Throughout the effort we had a close interface
5 with industry counterparts who were conducting a parallel
6 effort. They have also issued a report on tech spec
7 improvement and have presented their recommendation to the
8 Commission. The thrust of their recommendations were close
9 to ours.
10 To accomplish our mission, we developed a program
11 plan that had as its major objective to determine the
12 problems and develop alternatives to fix the problems,
13 select the best approach, and identify any short term
14 fixes.
15 Okay.
16 (Slide.)
17 The next slide deals with problem
18 identification. We identified problems by interviews,
19 document reviews and contractor assistance.
20 For interviews, we visited 13 plants, five
21 utility vendor offices and talked to operators and utility
22 vendor engineers. We talked to regional inspectors,
23 residents, AIF subcommittee members, public interest groups,
24 and NRR reviewers.
25 We also sent questionnaires to I&E headquarters

DAVbur

1 personnel and to NRR project managers to see if they had
2 problems that they wished to identify for us. We paid
3 special attention to operators and resident inspectors.
4 Primarily due to the tech specs, we identified three problem
5 areas:
6 First, lack of well-defined criteria for what a
7 tech spec ought to be. There are no clear-cut criteria.
8 Two, human factors and technical weaknesses,
9 inadequate bases, lack of clarity, lack of requirements, and
10 overly restrictive definitions of operability.
11 The third problem area was the reluctance of NRC
12 staff to use tools other than tech specs. Requirements can
13 be imposed by regulations, tech specs, the FSAR, license
14 conditions, and for documents such as the QA program that is
15 tied to the license.
16 Staff's choice has been to use tech specs for
17 most requirements. Tech specs thus become a catchall
18 covering a wide spectrum of safety reports.
19 DR. KERR: You just convince me almost that tech
20 specs ought to be eliminated, not improved.
21 MR. BRYAN: I don't want to go that far. There
22 are some very important specs that should stay, in our
23 opinion.
24 MR. BUTCHER: Later in our discussion, we will
25 point out that we believe that as much as 40 percent of the

DAVbur

tech specs could be eliminated.

DR. MOELLER: On that middle item, it is one of the items I raised in the memo I wrote on this. Would you say -- again, when you say human factors, you mean they are not written in a manner that is readily comprehensible?

MR. BRYAN: Yes, that is the basic problem.

MR. EBERSOLE: May I ask, in the defined outage times, when you have disabled equipment, is there any really solid foundation for the defined outage times?

MR. BRYAN: At present there is not.

MR. EBERSOLE: It is just arbitrary. You have X hours until you do something?

MR. BRYAN: It is probably, as someone said -- you know, we were talking about this issue, and Mr. Denton or Mr. Case said when the engineer told them I think it ought to be eight weeks, he says, well, that is probably a good number.

I don't think it is quite that simple, but in fact there is no technical basis for most of the time specs.

MR. EBERSOLE: Isn't there a void in the tech specs, also, that causes so many shutdowns to occur when one goes into equipment maintenance alterations?

MR. BRYAN: You mean by human error? Yes.

MR. EBERSOLE: They are not warned that if they

DAVbur

1 touch a relay here they had better not touch a bearing
2 somewhere else?
3 MR. BRYAN: That is right.
4 MR. EBERSOLE: There is no matrix in the system
5 to keep this from happening?
6 MR. BRYAN: It is human error, you know. When we
7 get into these systems there is that chance that an error
8 can be committed by a mechanic, an instrument technician
9 when he does the test.
10 DR. SIESS: Would the tech specs tell you how to
11 conduct the test?
12 MR. BRYAN: They rarely do.
13 DR. KERR: I raise the question, not wanting to
14 be facetious, when tech specs came into existence they came
15 into existence because licenses had become so complicated
16 that we were going to have this simple set of rules which
17 would be a minimum set of criteria for plant operation.
18 Now, clearly, they never achieved that. In fact, they have
19 gone so far from that that the original objective has been
20 lost.
21 So what is the reason for them now?
22 You said that the staff was using them for things
23 that really could well be accomplished by other mechanisms.
24 What are they for?
25 MR. BUTCHER: I think that Sam's next slide in

1 DAVbur

the recommendations area, when you see the kind of criteria that we are proposing, we will identify what the project people think they ought to be used for.

And as I indicated, when you go to apply those criteria, what you discover is that as much as 40 percent of them don't meet what ought to be the intent of the tech specs.

Perhaps you can show the slide that you have on recommendations.

DR. KERR: Would you go for 50?

MR. BUTCHER: It may well be the outcome.

(Slide.)

DR. MARK: I believe I heard that they run to 500 pages, for example. Now, you have the exciting prospect of running that down to 300 pages.

MR. BRYAN: We plan to do more than that if we can.

When we say 60 percent, we are talking about limiting conditions for operation. Some of those items that have limiting conditions for operation may have large segments of lists like fire protection and that sort of thing. So it will come down to a smaller segment.

MR. BUTCHER: I believe that the volume will substantially be more than a 40 percent reduction in volume.

1 MR. BRYAN: I want to address the impression that
2 Dr. Kerr had.
3 These tech specs are items that are extracted
4 from the safety analysis that live in perpetuity, that you
5 don't want changed without prior NRC approval. We think we
6 have abused that with this old system.
7 DR. KERR: In the FSAR I guess someone is
8 extracting them so they will live in perpetuity, but they
9 will live in perpetuity just as well in the SAR.
10 MR. BRYAN: If they are in the FSAR, the licensee
11 has the right to change them.
12 DR. KERR: If you can tell me that you can
13 assemble 10 pages instead of a 15-volume SAR so somebody
14 could find it, I would find that logic compelling. But if
15 you tell me you are going to reduce the 15 volumes to 300
16 pages, I find that argument less useful.
17 But go ahead.
18 MR. BRYAN: Let me proceed on this. Maybe it
19 will come out.
20 (Slide.)
21 This slide begins our recommendations.
22 Our first recommendation was that the Commission
23 policy statement should be issued which defines the scope
24 and purpose of technical specifications and encourages
25 licensees to implement a program to upgrade their technical

DAVbur

1 specifications.

2 In trying to define the scope and purpose of tech

3 specs, we kept coming back to the statement used by the

4 Appeal Board in KLAB-531 associated with the Trojan fuel

5 pool modification. It reads:

6 "Tech specs are to be reserved for

7 those matters as to which imposition

8 of rigid conditions or limitations

9 upon reactor operation is deemed

10 necessary to obviate the possibility

11 of an abnormal situation or event

12 giving rise to an immediate threat

13 to the public health and safety."

14 The statement introduces the ideas of immediacy

15 and importance. TSIP felt that this adequately stated the

16 purpose and scope of tech specs and felt that no change in

17 this policy was needed.

18 However, we recognize that applying this

19 statement of purpose to structures, system components, and

20 parameters, because it is so general, would be difficult.

21 So we felt we needed more explicit or objective criteria

22 that would capture this objective concept.

23 So we worked closely with the AIF working group

24 on criteria development to come up with a suitable objective

25 criterion. We each made several tries at this, and it

1 DAVbur

1 wasn't easy.

2 Finally, AIF proposed what we consider to be the

3 best approach, and it covers what I believe most of us carry

4 around in our heads as the most important safety

5 requirements.

6 Okay. Shown on this next slide --

7 (Slide.)

8 -- is that criterion.

9 We are really talking about criteria for limiting

10 safety system settings, limiting conditions for operations,

11 and of course surveillance tests that accompany these.

12 DR. KERR: That purports to be a criterion. Then

13 it defines the criterion as an installed system.

14 MR. BRYAN: We began with existing technical

15 specifications as they exist today and tried to determine

16 what should be put in technical specifications.

17 We believe that these sorts of things -- the

18 installed system that is used in tech monitors, if that

19 system is used for this purpose, then the tech specs on that

20 system should be retained in technical specifications.

21 An installed system that is used to detect by

22 monitors in the control room a significant abnormal

23 degradation of the reactor coolant pressure boundary, this

24 criterion employs the accident prevention concept by using

25 the leak before break principle for piping systems, and it

DAVbur

1 sets the limit for allowed leakage, and when that limit is
2 reached the reactor shuts down and the so-called LOCA is
3 prevented.
4 The second criterion is a process variable that
5 is an initial condition of a DBA analysis. This criterion
6 of forcing the process variables to begin at values assumed
7 in the actual transient analysis will force the end point of
8 the accident or transient to be within that analysis.
9 DR. OKRENT: It will?
10 MR. BRYAN: Well, I don't say for sure, but that
11 is the concept.
12 The third criterion is that a structure, system,
13 or component that is part of the primary success path of a
14 safety sequence analysis functions or actuates to mitigate a
15 design basis accident. This criterion captures all the
16 important automatic features that occur following a DBA.
17 DR. OKRENT: Why the emphasis on design basis
18 accidents and no mention of severe accidents?
19 MR. BRYAN: Design basis accidents were the
20 original licensing basis.
21 DR. OKRENT: I thought we were taking a fresh
22 look at that.
23 MR. BUTCHER: We need to clarify that by design
24 basic accident here it includes things like anticipated
25 transients and loss of offsite power and things such as

DAVbur

1 that. It does not go into station blackout and events such
2 as that.
3 What we are trying to do here is develop a tool
4 that can work within the existing regulations for defining
5 what ought to be in technical specifications. We weren't
6 trying to look to the future. We were looking for a tool we
7 could use to make some immediate improvement in the
8 technical specification process without having to delay
9 those decisions until other wider issues are resolved.
10 DR. OKRENT: Is there any instrumentation that a
11 plant needs to have or equipment that it needs to have that
12 would not be covered by those three criteria?
13 MR. BUTCHER: We have done a trial application of
14 these criteria to see what kinds of systems don't meet those
15 criteria, and we haven't identified any today which
16 represent, as Criterion 3 would indicate there, an
17 elimination of any system or component which would be a
18 factor in the primary success path of dealing with that
19 event.
20 DR. OKRENT: That is not what I asked. How about
21 the hydrogen control systems on plants? Are they covered by
22 tech specs today?
23 MR. BUTCHER: I think many of them are covered by
24 tech specs today, but they probably would not meet this
25 criterion.

DR. OKRENT: That is right, and do you think they should no longer be covered by tech specs or what?

MR. BUTCHER: I want to point out that these criteria have not been adopted by the staff. These were criteria which were proposed by that study. Part of the staff's program for tech spec improvement is to answer that question.

What we intend to do is to answer that question from a risk perspective and to actually attempt to do some risk evaluation of what the significance is of those systems and components which would not be included in the technical specifications.

MR. MICHELSON: Fire protection is a good example.

MR. BUTCHER: Fire protection, water chemistry.

MR. BRYAN: Let me make a point, too, and that is that by removing it from the tech specs it doesn't mean that the licensee doesn't have to do them. They will still be required --

DR. OKRENT: I am just trying to understand the logic. I would think if we were taking a fresh approach I would see not only design basis accidents there. I would see things that related to protecting the public health and safety more.

But let it go. I would like to end by 6:00

1 DAVbur

o'clock.

DR. KERR: Is this the slide that is supposed to convince me that tech specs are needed?

MR. BRYAN: I believe that is it.

DAVbw

MR. BUTCHER: Our intent was not to come down here to convince the Committee that we need technical specifications. Our intent was to come down and outline the program that we have for making the one that we have now easier to live with.

MR. EBERSOLE: Can you put that up again just a minute, because I think the last bullet has a mistake in it. I couldn't find, for instance, the aux feed pump anywhere I looked up there. I would find it, if, in the last bullet you had written in a structure system or component that is part of the primary success path of a safety sequence or function or actuates to mitigate a design basis accident, but when you put that analysis and in there, you threw that out.

In short, you tied that to a design basis accident, exclusively. I don't see, for instance in there -- where would I find the aux feed pump?

MR. BRYAN: It would be used to mitigate a design basis accident, and it would remain a tech spec.

MR. EBERSOLE: In the usual context of a design basis accident, it is a break on the primary side.

MR. BUTCHER: We recognize that may be a poor choice of words. In fact, we are looking for other sources of words.

MR. EBERSOLE: Well, good. I think you could

DAVbw

1 improve the wording.

2 MR. WARD: I guess I am surprised that you

3 haven't answered Dr. Okrent's question more explicitly.

4 This is not a program to accommodate the tech specs to a new

5 concept of, I don't know, regulation, namely, to regulate

6 for severe accidents. It is coming from the other

7 direction. It is something that makes the tech specs easier

8 to live with. Now it may that other program is needed.

9 Maybe it is more important than this one, but you shouldn't

10 look to this program for accommodating new information.

11 DR. OKRENT: I am just looking for a sensible

12 program, that's all.

13 DR. SIESS: This one is sensible in what it is

14 trying to do.

15 MR. WARD: For what it is trying to do, it puts

16 it in a different box.

17 MR. BUTCHER: Sam, perhaps you can go on. We

18 would like to spend a little bit of time talking about what

19 activities we have ongoing within this program, so perhaps,

20 Sam, you can just put up the other recommendations of the

21 project.

22 MR. BRYAN: Okay. I will let you read that. If

23 you have any questions --

24 (Slide.)

25 MR. BUTCHER: These are areas that we will work

DAVbw

in in parallel with attempting to apply these criteria to the existing technical specifications, and we will attempt to make improvements even in those thingw which remain in the specifications.

DR. KERR: But how are tech specs going to improve human factors? Does that mean they are going to be more readable?

MR. BRYAN: That means they are going to be more readable, more usable. We are carefully going to use things like footnotes, structure them better, help find where you want to be, even better.

DR. KERR: If I didn't know human factors, I might say we were going to try to make the tech specs make more sense.

MR. BUTCHER: That is a better way to state it.

(Slide.)

MR. BUTCHER: Now we would like to talk a little bit about what we have ongoing and are in the first stages of trying to implement these recommendations. We have actually taken these criteria and applied them to two sets of technical specifications. Wolf Creek was one for the PWR and Limerick is now in process for the BWR. As I indicated, what we discover is that on a first cut, about 40 percent of the LCOs from the technical specifications can be dropped, and with them go the action statements and the

1 DAVbw

1 surveillances.

2 When I say "dropped," I mean dropped from the

3 technical specifications. I don't mean dropped from

4 controlling the regulatory process. They would just be

5 controlled by some other mechanism.

6 MR. MICHELSON: Not some other mechanism is what

7 I thought you were going to tell us about. You are taking

8 it out of one place, but are you going to tell us how you

9 are going to cover it?

10 MR. BUTCHER: There are many mechanisms that the

11 NRC already uses for controlling regulatory requirements,

12 security plans, QA plans, license conditions, administrative

13 sections of the tech specs.

14 MR. MICHELSON: You are showing me with a lot of

15 terms now. For instance, fire protection. Where are you

16 going to put the requirements for surveillance in fire

17 protection or assurance of the availability of fire

18 protection?

19 MR. BUTCHER: The current proposal is to include

20 a license condition which would require that no changes to

21 the fire protection program can be made without doing a

22 vigorous evaluation.

23 MR. MICHELSON: How does that assure me that I

24 know the fire protection pump is going to be available, if I

25 need it?

MR. BUTCHER: The fire protection program itself will specify under what conditions the pump has to be available.

MR. MICHELSON: You are just going to move the tech spec from the tech spec location back into the FSAR then; is that what you are saying?

MR. BUTCHER: We wouldn't move the pages themselves, but the requirements that are in those pages.

MR. MICHELSON: Well, the re -- oh, the requirements will move. You haven't eliminated anything. You have just put it in two places instead of one.

MR. BUTCHER: What we have attempted to do is put it more under the control of the licensee and to eliminate the need for so many license amendments. I have heard it estimated that as high as one half of the license amendments that the Staff receives are related to fire protection and things, such as a detector is out for some period of time or something like that. The attempt is to get it more under the control of the licensee.

MR. MICHELSON: By "control" now, do you mean he will decide how often he needs to test it, and so forth? Is that what you mean by "control"?

MR. BUTCHER: The initial transfer of the control of this to other mechanisms would go into the requirements being exactly as they are today. Now in order to change

DAVbw

those requirements, he would have to go through a rigorous evaluation similar to that which is done in 5059.

MR. MICHELSON: You are saying he will take this portion of the tech spec and put it back in the FSAR and then later on, he could start to change it through different mechanisms than a tech spec?

MR. BUTCHER: That is correct. That is the current proposal. Now that has not been adopted.

MR. MICHELSON: But those would come under some other NRC review process?

MR. BUTCHER: That is correct, either an I&E audit -- well, mostly I&E audits.

MR. MICHELSON: Still there are requirements to test pumps at certain intervals, and so forth.

How are those going to be covered?

MR. BUTCHER: They would be covered under the first protection program. If you were to change those, you would have to change them in accordance with the other controls.

MR. MICHELSON: But there won't be any limiting conditions of operation associated with that, is that what you are saying?

MR. BUTCHER: We don't propose any at this point.

MR. MICHELSON: This is very confusing, but I

DAVbw

1 don't want to take any more time now. This is an example,
2 though. ?
3 MR. EBERSOLE: Let's go ahead.
4 DR. SHEWMON: Two questions. I was up at
5 Millstone for the NTOL conversion six months ago, three
6 months. It had to do with the number of LERs they had on
7 Unit 2, I should say. We got a lot more, because the tech
8 specs got thicker. Therefore, we have got to do LERs for
9 the newer plants.
10 Is there a thought that these would get down to a
11 density that is licensed currently on the older plants?
12 MR. BUTCHER: It is not believed that they would
13 go all the way back to what you might have on a custom
14 technical specification today on an older plant, but it is
15 expected they would be reduced substantially. I can give
16 you an example of an older plant with a custom spec. We
17 surveyed six systems and came up with, in the instance of
18 surveillances, the six systems would require about 390, I
19 believe the number was, in the area of several hundred
20 surveillances per year.
21 The same six systems, under standard technical
22 specification would take 14,000 to 15,000 separate
23 surveillances per year. I don't think we are ever going to
24 get below the 390, or at least not with this program, but
25 certainly we are going to get something below 14,000 tests

1 DAVbw

per year in surveillances on this equipment.

DR. SHEWMON: A different question. I read the report in the last few months of somebody, AIF, maybe INPO, who had studied the steam generator level and how low this really could be allowed to get without violating conditions for design basis accidents. They found that there were several more feet it could run, so, indeed, the transients wouldn't trip them out into your scram situation or an illegal situation, reportable.

Is that sort of thing likely to get factored in, or is that another program farther down the line?

MR. BUTCHER: No, that is part of this program. You can see that is covered under items toward the end there, like BWR reaction protection surveillance. In addition to taking things out of the technical specifications, we want to look at what is left and see that it makes sense in terms of what the limits are. We have already, as a part of this program, extended surveillance intervals on Westinghouse reactor protection systems from monthly to quarterly, on manyof the instruments and functions in it.

As a part of this program, in parallel with the long-term, complete rewriting of the standard technical specifications and the long-term reduction in the volume, we will be examining, individually, the LCOS and surveillance

DAVbw

intervals. LCOs as you arae talking about in the instrument range there and attempting to get some relief in there. We had several already ongoing activities in that area, and they seem to be bearing fruit. What we discovered is that risk seems to be relatively insensitive to allowed outage times in the range that we are looking at now. It seems to be relatively insensitive to margins on instrument settings in the ranges that we are looking at now.

MR. EBERSOLE: I suspect that the particular indications in the B&W plants, the ranges are three types, you know, in integrated control systems.

MR. BUTCHER: Yes. We have one instance where we believe there are some controls in the B&W reactors, its rod insertion limits. It is a different subject, but we believe they are too tight now, and we need to get some flexibility there.

These are the kinds of activities that we have ongoing now. Most of this activity is either in parallel or in conjunction with an industry-sponsored program. It is a major program we have here, and it is terribly resource-intensive, and what you discover is that there is a great deal of interaction between us and the industry on attempting to determine who is going to do what.

Perhaps you can go to the next slide, Same.

(Slide.)

1 DAVbw

I want to give you a timetable for where we are going with this program, and when you can expect to see some results. We hope to produce a detailed implementation program plan sometime in March. I would like to see it done early in March. What that would do is identify specifically what the steps are that we are going to go through in the process, what we will do, what the industry will do, what I&E will have to do in parallel with what we are doing, what the research folks have to do. There is much research activity in this area of reducing surveillance intervals and allowed outages times. And that work has to go forward also, in parallel with our overall program.

We would propose to have before the Commission a policy statement paper sometime in June, where we would recommend to the Commission either those three criteria or some other criteria to adopt as the basis for determining what ought to be in technical specifications as the policy of this agency.

The ultimate long-term objective is, as stated, a complete rewrite of the standard technical specifications, and then the application of that rewrite to the individual plant-specific licenses, as the licensees apply for them. The estimates we have from the industry on how long it would take them to be in a position to do this thing, to rewrite the STS and propose it back for Staff review, run from nine

DAVow

1 months to a year, the industry believes it will take them to
2 do this, so it is a rather long-term program and a major
3 initiative.
4 DR. KERR: How many man-years do you anticipate
5 each plant will have to spend on this?
6 MR. BUTCHER: The current process of preparing an
7 NTOL spec under the current STS requires in the range of
8 about half a man-year of Staff effort. I don't know how
9 much energy effort goes into it. I would estimate -- we
10 have looked at what would take for us to do the reviews that
11 would be necessary on a plant-specific submittal.
12 After we have a new set of standard technical
13 specifications, and a rough guess at this point, and it's
14 not a very rigorous calculation, would be about half of
15 that. So it would be in the range of a quarter of a man-yer
16 for us to do it.
17 Now I don't have an estimate of what the
18 industry's resource requirements would be.
19 DR. KERR: You would have to ask a series of
20 questions after you have reviewed it. It could be a fairly
21 labor-intensive effort.
22 MR. BUTCHER: It isn't labor-intensive to
23 construct a set of tech specs for a plant. It would
24 certainly be less than an NTOL, though, a new set.
25 The industry is pretty supportive of this

DAVbw

Act. Well, they are very supportive of it. I have not heard any reservations on their willingness to invest that kind of resource in doing it.

MR. EBERSOLE: They are going to come out of it with sater plants in the long run.

MR. BUTCHER: That's their perception.

That is all the prepared remarks that we have.

MR. EBERSOLE: Yes, sir.

MR. REED: Since we are closing, I would like to make the point that I attended a number of the meetings, as I was delegated to do. I was very impressed by the speed with which the Staff people met the challenge and achieved their goals. I believe you had an original rough draft, everything drafted out by September of last year, and you only had about six months to accomplish that. You achieved that goal, and I am disappointed here that we are getting an interrupted, fragmented presentation on a very restricted time basis, because I was impressed by the total cooperation and activity and decisions that were made between the AIF people and the Staff.

MR. EBERSOLE: I think this is a very significant area with respect to nuclear safety, to better define the reasons for outages times and whatever. And of course, I agree with you that we just grabbed it in [illegible] minutes of time here and got an exposure to it. I am [illegible] sure we

DAVbw

are going to have to ask you back and get a more complete exposure at a later time.

Thank you for coming down for this piece.

MR. WARD: Could I comment?

From the standpoint of reactor safety, this program seems to be of benefit, because it is simplifying things, and hopefully, we will end up with less distraction for the people who are running the plants and less distraction from real things and paying attention to the complicated paperwork that is provided in the present tech specs, but it isn't really doing anything.

This program really isn't doing anything from the standpoint of making tech specs more risk-oriented or more related to what's been learned over 20 to 30 years of operating and analyzing plants, of what risks are, what systems need to be controlled most rigorously from a risk standpoint. It is really not doing that. Is there any sort of a program?

DR. OKRENT: In fact, the comment that Paul made earlier about some people are considering maybe we can run with less water in steam generators.

I can think of some events where you don't want less water in the steam generator, but they're not usually design basis accidents.

I don't know whether you are going to be

1 considering those, when you are trying to decide, is it
2 okay to change that tech spec.
3 I can't tell from what I heard. My guess is no,
4 in view of the criteria I saw there. So I will stay with my
5 earlier comment.
6 I would like to see a sensible program.
7 MR. EBERSOLE: Well, the better definition of the
8 LCOs will have an impact on safety. I think at least there
9 will be a defined basis.
10 DR. KERR: Jess, those are based on design basis
11 accidents almost exclusively.
12 MR. EBERSOLE: I have an outage time for a diesel
13 or whatever or whatever.
14 DR. KERR: But those aren't based on anything.
15 MR. EBERSOLE: I know it, and they need to be.
16 MR. BUTCHER: Again, the term "design basis
17 accident," as used there is probably too restrictive. We
18 would have to put it on a slide.
19 You have to read what the Staff intended and what
20 the AIF intended by that statement. It would include all
21 the anticipated transients that you see. Everything that is
22 analyzed in an FSAR.
23 Now those things which go beyond the current
24 licensing basis of existing plants today, we did not attempt
25 to bring those into the process. Our intent is to live

2 DAVbw

1 within the existing regulations to get whatever improvements
2 we have, and hopefully, as the regulations evolve, then so
3 will tech specs.
4 MR. EBERSOLE: Any other questions?
5 MR. MICHELSON: I have one question.
6 What is the next step in the process? As Jesse
7 said, he wants to see this? When do we see this?
8 MR. HERNAN: Carl, let me address that.
9 The memorandum of understanding between EDO and
10 the Committee requires that you folks have a chance at
11 reviewing the Commission policy statement before it goes out
12 for public comment. So it looks like that would be around
13 June.
14 MR. MICHELSON: Okay. That answers the
15 question.
16 Thank you.
17 MR. EBERSOLE: It is all yours, Dave.
18 (Whereupon, at 6:10 p.m., the recorded portion of
19 the 310th meeting of the Advisory Committee on Reactor
20 Safeguards was concluded. Thereupon, the Committee entered
21 into an unrecorded session.)
22
23
24
25

CERTIFICATE OF OFFICIAL REPORTER

This is to certify that the attached proceedings before the UNITED STATES NUCLEAR REGULATORY COMMISSION in the matter of:

NAME OF PROCEEDING: ADVISORY COMMITTEE ON REACTOR SAFEGUARDS
310TH GENERAL MEETING

DOCKET NO.:

PLACE: WASHINGTON, D. C.

DATE: FRIDAY, FEBRUARY 14, 1986

were held as herein appears, and that this is the original transcript thereof for the file of the United States Nuclear Regulatory Commission.

(sigt) David L. Hoffman
(TYPED)
DAVID L. HOFFMAN
Official Reporter
ACE-FEDERAL REPORTERS, INC.
Reporter's Affiliation

NRR STAFF PRESENTATION TO THE ACRS

SUBJECT: NRR TECHNICAL SPECIFICATION IMPROVEMENT PROGRAM

DATE: FEBRUARY 14, 1986

PRESENTER: ED BUTCHER/SAM BRYAN

PRESENTER'S TITLE/BRANCH/DIV:

ED BUTCHER, CHIEF
TECHNICAL SPECIFICATIONS COORDINATION BRANCH
DIVISION OF HUMAN FACTORS TECHNOLOGY

SAM BRYAN, SR. REACTOR ENG.
TECHNICAL SPECIFICATIONS
COORDINATION BRANCH
DIVISION OF HUMAN FACTORS
TECHNOLOGY

PRESENTER'S NRC TEL. NO.:

(301) - 492-7725 (ED BUTCHER)
(301) - 492-9734 (SAM BRYAN)

SUBCOMMITTEE:

REACTOR OPERATIONS

NRR TECHNICAL SPECIFICATION IMPROVEMENT PROGRAM

- PHASE I

  PROBLEM IDENTIFICATION AND
  RECOMMENDATIONS, TSIP REPORT

- PHASE II

  IMPLEMENTATION, TSCB

NEED FOR TSIP

- TOO MANY SPECS - LESS IMPORTANT ONES THUS DETRACTING FROM IMPORTANT ONES
- SIZE AND COMPLEXITY OF TS
- INDUSTRY AVAILABILITY RECORD
- NOT OPERATOR ORIENTED
- FINDINGS OF NUREG-1024 "TECHNICAL SPECIFICATIONS-ENHANCING THE SAFETY IMPACT"

PROBLEM IDENTIFICATION

- IDENTIFIED PROBLEMS BY INTERVIEWS, DOCUMENT REVIEWS, AND CONTRACTOR ASSISTANCE

- IDENTIFIED THREE PROBLEM AREAS

  - LACK OF WELL-DEFINED CRITERIA FOR TS
  - HUMAN FACTORS AND TECHNICAL WEAKNESSES
  - RELUCTANCE OF THE NRC STAFF TO USE TOOLS OTHER THAN TS

TECHNICAL SPECIFICATION IMPROVEMENT PROJECT RECOMMENDATIONS

"(1) A COMMISSION POLICY STATEMENT SHOULD BE ISSUED WHICH DEFINES THE SCOPE AND PURPOSE OF TECHNICAL SPECIFICATIONS AND ENCOURAGES LICENSEES TO IMPLEMENT A PROGRAM TO UPGRADE THEIR TECHNICAL SPECIFICATIONS."

SUBJECTIVE STATEMENT OF PURPOSE

"TECHNICAL SPECIFICATIONS ARE TO BE RESERVED FOR THOSE MATTERS AS TO WHICH IMPOSITION OF RIGID CONDITIONS OR LIMITATIONS UPON REACTOR OPERATION IS DEEMED NECESSARY TO OBVIATE THE POSSIBILITY OF AN ABNORMAL SITUATION OR EVENT GIVING RISE TO AN IMMEDIATE THREAT TO THE PUBLIC HEALTH AND SAFETY." (9 NRC 273, 1979)

CRITERIA FOR TS CONTENT

- AN INSTALLED SYSTEM THAT IS USED TO DETECT, BY MONITORS IN THE CONTROL ROOM, A SIGNIFICANT ABNORMAL DEGRADATION OF THE REACTOR COOLANT PRESSURE BOUNDARY.

- A PROCESS VARIABLE THAT IS AN INITIAL CONDITION OF A DBA ANALYSIS.

- A STRUCTURE, SYSTEM, OR COMPONENT THAT IS PART OF THE PRIMARY SUCCESS PATH OF A SAFETY SEQUENCE ANALYSIS AND FUNCTIONS OR ACTUATES TO MITIGATE A DESIGN BASIS ACCIDENT.

TECHNICAL SPECIFICATION IMPROVEMENT PROJECT RECOMMENDATIONS (CONTINUED)

"(2) THE NRC SHOULD GIVE INCREASED ATTENTION TO CHANGES MADE BY LICENSEES USING THE 10 CFR 50.59 PROCESS.

(3) THE NRC SHOULD REVIEW AND REVISE THE STANDARD TECHNICAL SPECIFICATIONS TO CORRECT HUMAN FACTORS AND OTHER TECHNICAL WEAKNESSES THROUGH A PROGRAM OF TECHNICAL ASSISTANCE AND DEDICATED IN-HOUSE TECHNICAL RESOURCES.

(4) THE NRC SHOULD ENCOURAGE THE CONTINUED DEVELOPMENT AND APPLICATION OF PROBABILISTIC RISK ASSESSMENT METHODS TO ADDRESS TECHNICAL SPECIFICATIONS REQUIREMENTS."

ONGOING ACTIVITIES

- TRIAL USE OF TSIP CRITERIA

- MEETINGS WITH INDUSTRY OWNERS GROUPS AND AIF

- SHORT TERM IMPROVEMENTS TO EXISTING STS

  - FIRE PROTECTION TECHNICAL SPECIFICATION

  - ACTION STATEMENTS FOR MISSED SURVEILLANCE TESTS

  - BWR RPS SURVEILLANCE INTERVALS AND AOTs (NEDC-30851P)

  - BWR ECCS INSTRUMENTATION SURVEILLANCE INTERVALS AND AOTs (NEDC-30936P)

- EVALUATION OF COMMENTS ON TSIP REPORT

FUTURE ACTIVITIES

- DETAILED IMPLEMENTATION PROGRAM PLAN - 03/86
- PROPOSED COMMISSION POLICY STATEMENT - 06/86
- ULTIMATE LONG TERM OBJECTIVE

"A COMPLETE REWRITE/STREAMLINING"
OF THE EXISTING STS BASED ON THE
RECOMMENDATIONS OF THE TSIP REPORT

Geologic Repository Reference Schedule

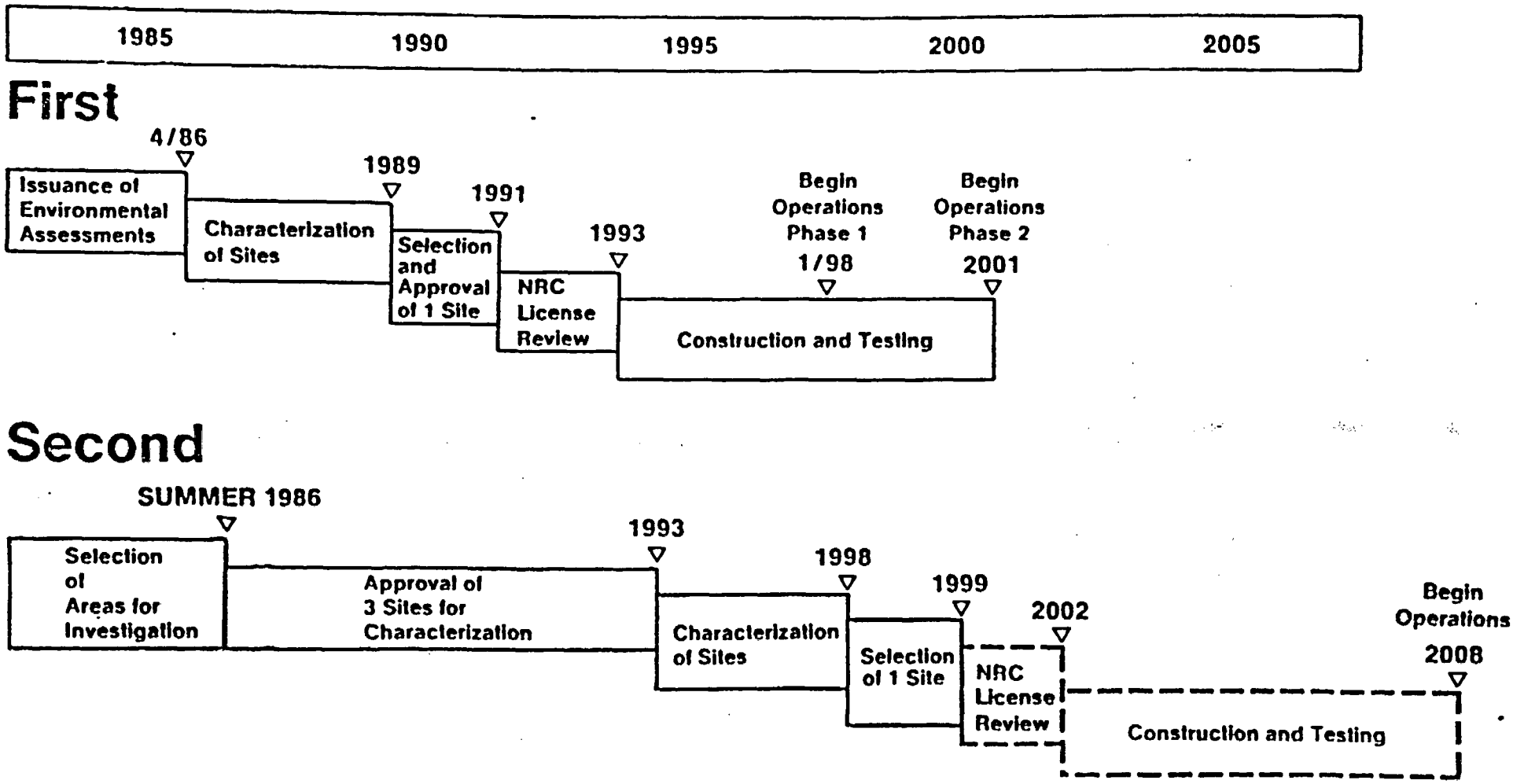

0303-0002MP 2/13/86

MRS Deployment Schedule

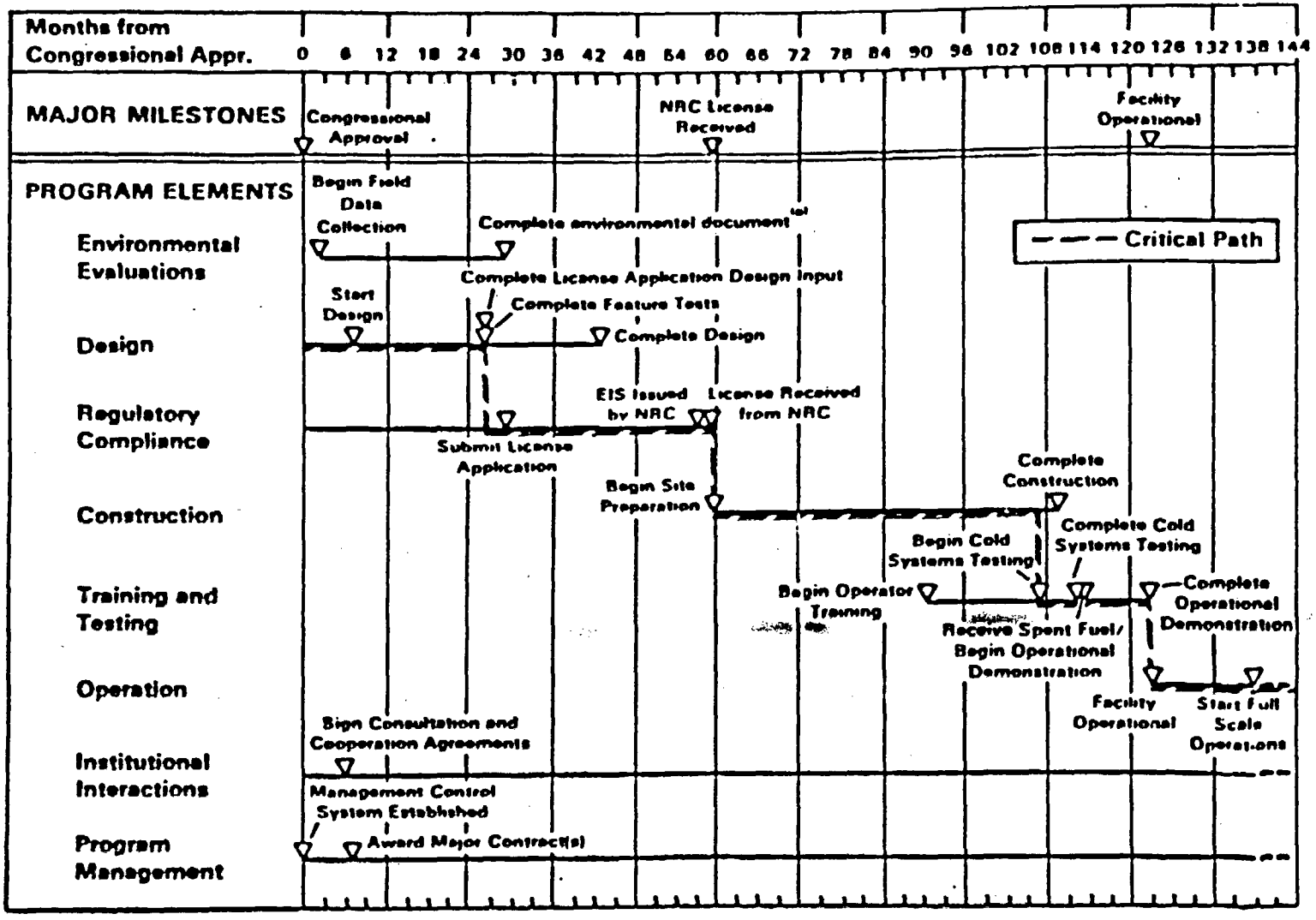

[a] The precise nature of this document will be dependent on the provisions of any authorizing legislation.

DOE RW-0030

Implementation Strategy for the Civilian Radioactive Waste Management Program

September 1985

U.S. Department of Energy
Office of Civilian Radioactive Waste Management

PREFACE

On January 7, 1983, the President signed the Nuclear Waste Policy Act of 1982 (the Act) into law. The Act requires the Department of Energy (DOE) to site, obtain a license, construct, and operate geologic repositories for spent fuel and high-level waste in a manner that "will provide a reasonable assurance that the public and the environment will be adequately protected..." (Subtitle A). In addition to establishing a detailed schedule for siting and licensing one or more geologic repositories, the Act contains several other features, including the following:

1. Assigning responsibility for the full payment of disposal costs to those who benefit from those services (i.e., the owners and generators of high-level waste and spent fuel) and, accordingly, creating in the Treasury of the United States a special Nuclear Waste Fund to be composed of the payments made by those using the services (Section 302).

2. Committing the Federal Government to study monitored retrievable storage in parallel with geologic repositories (Section 141).

3. Providing for a federally owned and operated system of interim-storage facilities for no more than 1900 metric tons of uranium (MTU) of spent fuel from civilian reactors whose owners cannot reasonably provide adequate storage capacity at the reactor site (Section 131) and creating an Interim Storage Fund to make certain that those using the services will pay the full costs (Section 136).

4. Setting out an extensive system of checks and balances through public involvement, along with written consultation-and-cooperation (C&C) agreements, to ensure Federal accountability to, and communication with, States and affected Indian tribes (Section 117).

Unprecedented technical and institutional challenges require resolution before the intent and the letter of the Act are achieved. First, the public must be convinced that the interests of the Nation are best served by consolidating the radioactive waste dispersed throughout the country in a limited number of geologic repositories designed for permanent disposal. The national interest must take precedence over parochial concerns. Next, the DOE must be able to achieve the tasks set forth in an unusually precise and complex schedule and to persuade the citizens of the country that the waste disposal program will be safe, efficient, and on schedule. Furthermore, the conflicting and competing interests that are mirrored by the tension between program schedule and technical certitude must be resolved. Finally, the DOE must grapple with the contentious issues that often accompany a task as complex and enduring as its waste-management program while never wavering from its commitment to build and operate the required disposal facilities.

The following policy goals guide the formulation and the implementation of the DOE's program:

1. The protection of public health and safety and environmental acceptability are of paramount importance.

2. The program must be credible to the public by virtue of its integrity and technical excellence.

3. The program must neither subsidize nor penalize nuclear power as an energy source.

4. The program must be conducted in a cost-effective manner, with full cost recovery.

The following specific program objectives have been established to implement the provisions of the Act. They evolve from the previously mentioned policy goals.

1. To site, obtain a license for, construct, and operate geologic repositories such that the transportation of radioactive waste to and disposal of the wastes in the repositories can be accomplished in a manner that is safe and environmentally acceptable.

2. To submit a proposal to Congress to develop one or more facilities for monitored retrievable storage.

3. To ensure the acceptance of waste for disposal by January 31, 1998, in accordance with the acceptance schedule provided for in the DOE's standard disposal contracts and in conformance with the Act.

4. To assist utilities in providing adequate and safe at-reactor storage for spent fuel before transfer to the DOE and to provide limited Federal interim storage to any utility found by the Nuclear Regulatory Commission to be eligible for such service.

5. To manage the technical program and the funds collected for disposal and storage services or otherwise provided through appropriation in an effective, integrated, and efficient manner.

In carrying out the program to accomplish these objectives, the DOE will comply fully with the consultation-and-cooperation requirements of the Act. The Act states in Section 111(a)(6) that "State and public participation in the planning and development of repositories is essential in order to promote public confidence in the safety of disposal of such waste and spent fuel...." The Act further defines in Sections 116, 117, and 118 the minimum requirements for consultation and cooperation with the States and affected Indian tribes. The DOE has worked to implement the law in a cooperative manner by providing mechanisms for the following:

1. Full, open, and timely sharing of technical information.

2. Consultation on key draft documents.

3. Negotiation of written agreements.

4. Financial assistance to States and affected Indian tribes to allow full participation and to provide impact mitigation.

5. Establishment of outreach programs to provide public information in cooperation with States and affected Indian tribes.

6. Joint workshops to address key technical and procedural issues.

7. Grants equal to taxes, as provided by the Act.

These mechanisms must at all times maintain clarity and credibility and must demonstrate that the Federal Government, the States, the affected Indian tribes, and the general public have genuine roles in shaping the policies that guide the program.

This document summarizes the DOE's strategy for the implementation of the provisions of the Act. It is largely adapted from Chapter 2 of Part I of the Mission Plan for the Civilian Radioactive Waste Management Program (DOE/RW-0005) which was published in June 1985. Further details concerning this strategy and the Civilian Radioactive Waste Management Program can be found in the Mission Plan.

IMPLEMENTATION STRATEGY FOR THE CIVILIAN RADIOACTIVE WASTE MANAGEMENT PROGRAM

1. INTRODUCTION

The Nuclear Waste Policy Act of 1982 (the Act) put in place a comprehensive, complex set of activities for achieving the capability to dispose of the Nation's high-level radioactive waste. The strategy of the program is intended to provide maximum assurance that the goals identified in the preface for implementing the provisions of the Act, are met. Among these goals and objectives, several stand out:

1. The program must protect the health and safety of the public and the quality of the environment.

2. The program must provide for the dissemination of information to the public and ensure opportunities for participation by the public and their representatives in order to achieve their confidence and support.

3. The program must be conducted in a financially responsible, cost-effective manner and on the basis of full cost recovery.

4. In accordance with the above goals, the program must vigorously pursue the Act's directive to begin accepting spent fuel and high-level waste for disposal no later than January 31, 1998, and to continue to dispose of the waste in a highly efficient manner consistent with the continued orderly operation of the Nation's nuclear power-generation plants.

The Act has provided a broad, flexible framework in which to conduct the necessary activities: it has authorized certain key facilities, set schedules and fees, articulated institutional interactions, provided the opportunity to analyze the desirability of enhancements to improve program performance, and recognized the need for flexibility and contingency planning in a large, complex, and controversial program that may span more than a century.

The strategy of the program is to ensure that the activities authorized by the Act are carried out in a vigorous manner; potentials for system-performance improvements are analyzed and incorporated where useful, including requests for new Congressional authority as allowed by the Act; and contingency plans are identified and evaluated to provide maximum confidence that the program is prepared to adjust to meet the requirements of the Act notwithstanding uncertainties as to future Congressional authorization decisions and technical and institutional matters.

The strategy can be described as a comprehensive system-development program through which any of three distinct plans can be successfully carried through to meet the requirements of the Act. In the discussions that follow in Sections 2, 3, and 4, these plans are referred to as the "authorized plan," the "improved-performance plan," and contingency plans. Also discussed in the

remainder of this chapter are other considerations pertinent to the program, such as defense waste (Section 5); assumptions about waste-system components (Section 6); and waste-acceptance schedules (Section 7).

2. THE AUTHORIZED PLAN

As shown in Figure 1, the Act authorizes a number of key activities that, taken together, can meet the objectives of providing for the permanent disposal of spent fuel and high-level waste. In particular, the Act authorizes the development and operation of a geologic repository, the necessary transportation system for moving the wastes to the repository, a provision for Federal interim storage for "civilian nuclear power reactors that cannot reasonably provide adequate storage capacity at the sites of such reactors when needed to assure the continued, orderly operation of such reactors," and a program to cooperate with the private sector in demonstrating the dry storage of spent fuel at reactor sites. These authorities, along with other key requirements stated in the Act (e.g., the need to obtain Congressional authorization for the construction of the second repository) constitute the minimum set of activities that the program will vigorously implement. They reflect the clear intent of the Act, and their successful completion will result in meeting a number of the most important provisions of the Act, namely:

1. A repository for the permanent disposal of spent fuel and high-level waste.

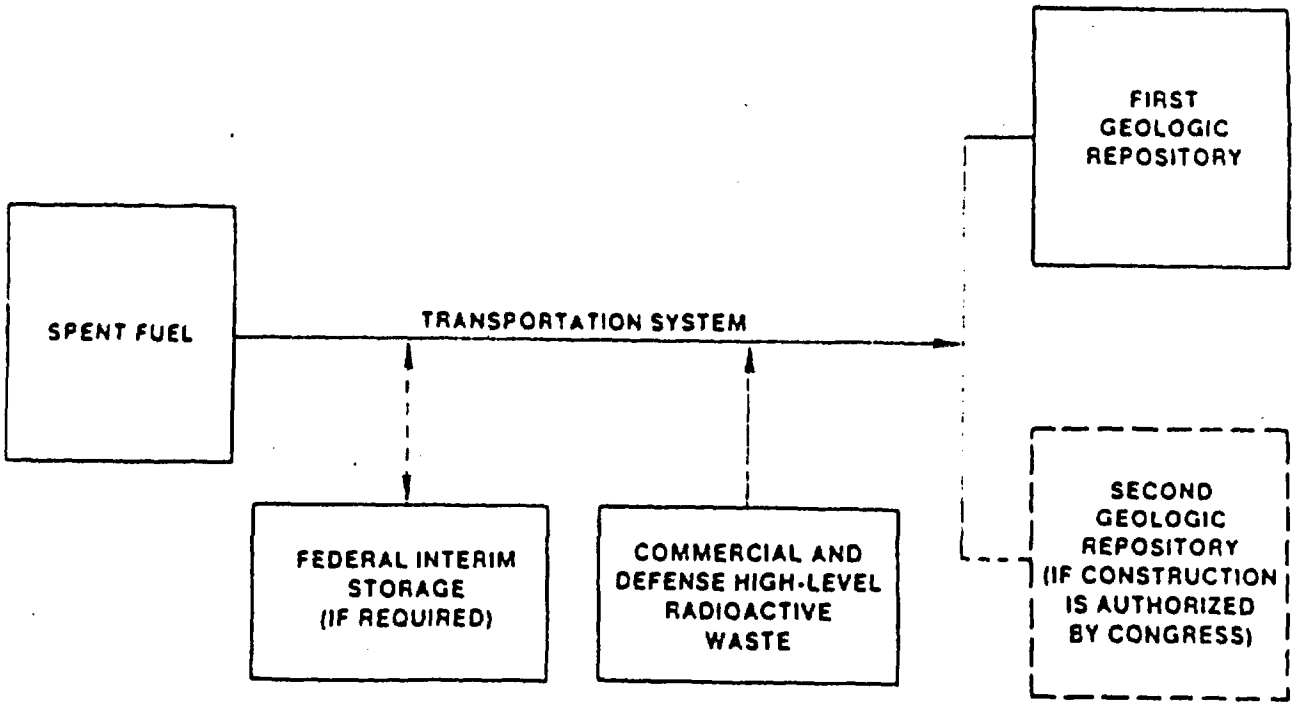

Figure 1. The waste disposal system currently authorized by Congress

0101-0004 6/13/85

2. The acceptance of waste for disposal beginning not later than January 31, 1998.

3. Safe transportation of wastes to the repository.

4. Protection of the health and safety of the public and environmental acceptability.

5. The provision of limited interim storage for utilities determined by the Nuclear Regulatory Commission to require such storage.

6. Encouragement to waste generators to effectively use existing storage facilities for the safe storage of the waste at the reactor site until the waste is accepted for disposal.

7. Full and open public participation.

8. Full cost recovery, with the costs borne equitably by the waste generators.

3. THE IMPROVED-PERFORMANCE PLAN

The improved-performance plan (see Figure 2) reflects the opportunities built into the Act to evaluate options for enhancing the authorized plan in meeting the requirements of the Act. Careful analyses of the provisions of the Act and of programmatic options have shown that increased confidence and improved performance can be achieved by emphasizing systems integration--that is, by considering all of the elements of the program as part of a single system, optimized as a unit to best meet the program requirements.

This concept of optimizing the system by integrating all the facilities and components applies not only to the authorized plan but also to any other waste-management system that could be developed to meet the requirements of the Act. In particular, the Act requires the DOE to complete a detailed study of the need for, and the feasibility of, monitored retrievable storage (MRS) and submit a proposal to Congress for the construction of one or more MRS facilities. Analyses to date continue to reinforce the tentative conclusion that an MRS facility fully integrated into the overall waste-management system can significantly enhance several important program objectives. The improvements include the following:

1. Improved transportation efficiency because spent-fuel consolidation and packaging at the MRS facility would reduce the number of shipments to the repository with concomitant reductions in potential environmental impacts and risks to the public.

2. Increased reliability and flexibility in operating the system in an integrated cost-effective manner by incorporating an additional facility that can regulate the flow of waste to the repository.

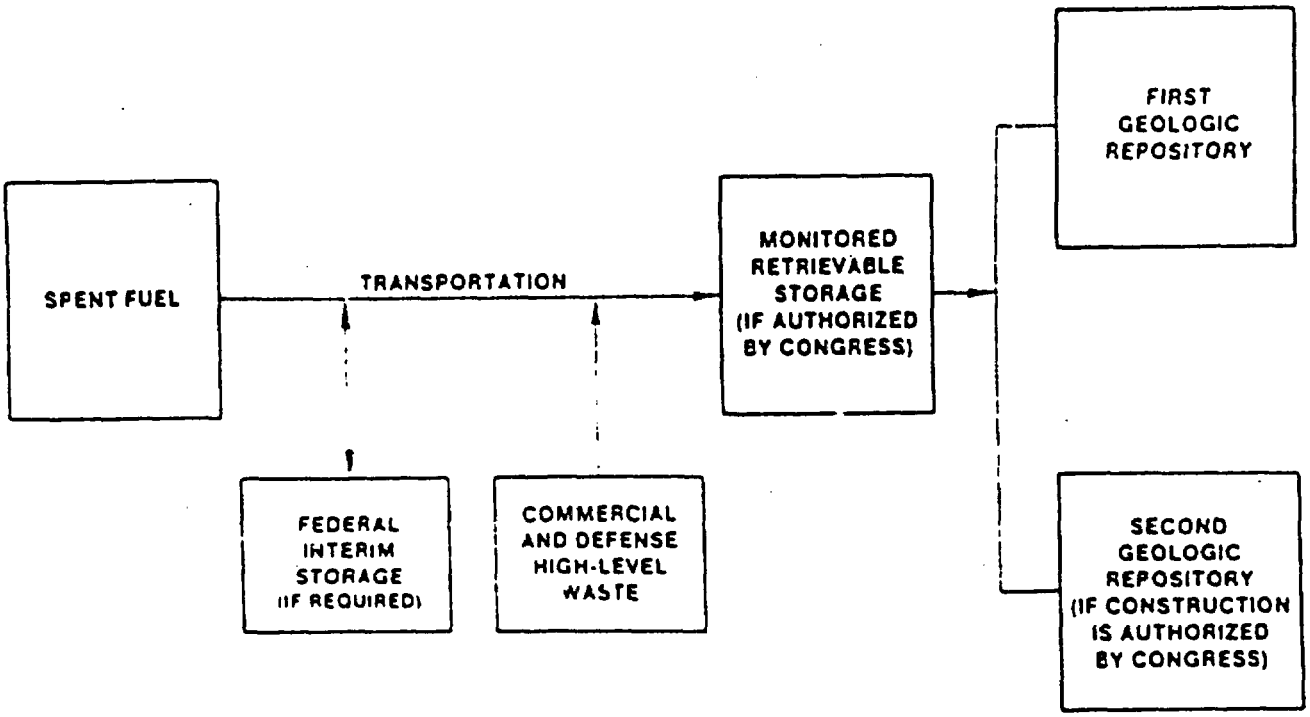

0101-0004 8/13/85

Figure 2. Improved performance system with integral MRS facility

3. Improved confidence in the DOE's ability to meet schedules, particularly in beginning to accept quantities of waste no later than January 31, 1998. The integral MRS facility would be scheduled for initial operation as early as 1996.

4. Ability to accept significantly larger quantities of waste in the early years of operation, substantially reducing the added cost of providing increased at-reactor storage capabilities.

5. Ability to focus repository licensing efforts on demonstrating the long-term isolation capability of the site because many of the operational functions (i.e., waste preparation) would be handled at the MRS facility.

The studies and analyses necessary to fully describe the MRS facility and to define its potential costs and benefits are being prepared. The final results will be presented in a proposal to be submitted for Congressional consideration, as required by the Act. Should the Congress authorize the construction of an integrated MRS facility, the improved-performance plan will become the reference program plan, and the integrated system described in this document will be the reference waste-management system.

4. CONTINGENCY PLANS

The preceding sections outline the strategy of the DOE's waste-management program. However, all those involved in, and concerned about, these activities recognize that this program is highly controversial; involved in it are a number of important constituencies with widely varying views of how, when, and whether elements of the program should be carried out. The Act is a remarkable piece of legislation in that there is general agreement on its key provisions: the timely development of a geologic repository for the permanent disposal of spent fuel and high-level waste is in the national interest, and the Act provides sufficient authority to get the job done. The Act further anticipated potential conflicts between the various constituencies and provided a means for resolving ultimate disputes, such as the one that could arise between a chosen host State and the Federal Government. Nevertheless, a program intended to span more than a century, with some choices by Congress, States, affected Indian tribes, and the nuclear power industry yet to be made, requires that contingency plans be considered.

The number and the detail of the options that could be considered are potentially great. But the Act and the accomplishments of the program to date provide increasing confidence in the DOE's ability to follow its strategy. Therefore, the contingencies identified below and shown in Figure 3 are limited to major areas of uncertainty and will be more fully defined as the evolving situation requires.

The Act specifies a schedule and a process for the siting of repositories. It gives the affected State and any affected Indian tribe on whose reservation a repository would be located the right to file a notice of disapproval after a repository site has been recommended to Congress, and this notice can be overridden only by a joint resolution of Congress. Should a notice of disapproval be made and not overturned, the President is required to recommend another site for the first repository within one year, with the same approval provisions to apply. Thus, the first repository could become operational on time, it could be substantially delayed, or successive notices of disapproval not overridden by Congress could prevent its construction.

The baseline program assumption, of course, is that the repository is built on schedule. Should the repository be substantially delayed, one of two contingency approaches would be pursued. If the MRS facility is authorized by Congress and constructed, it can begin to accept spent fuel in a timely manner and package and store it (up to the authorized storage-capacity limit) until a repository becomes operational. If the MRS facility is not authorized, or if it is significantly delayed, increasing quantities of spent fuel will have to be stored at reactor sites. In that event, the pools for storing the fuel will continue to be filled, and additional onsite storage capacity through the use of dry storage in casks or similar technologies will have to be employed.

If site characterization shows that none of the candidate sites for the first repository are suitable or should successive notices of disapproval be made and upheld, the DOE has two main contingency plans. If an MRS facility has been authorized and constructed, it can accept spent fuel on or ahead of schedule, packaging and storing it (up to the authorized storage-capacity limit) until the "second" repository is authorized (which, of course, would

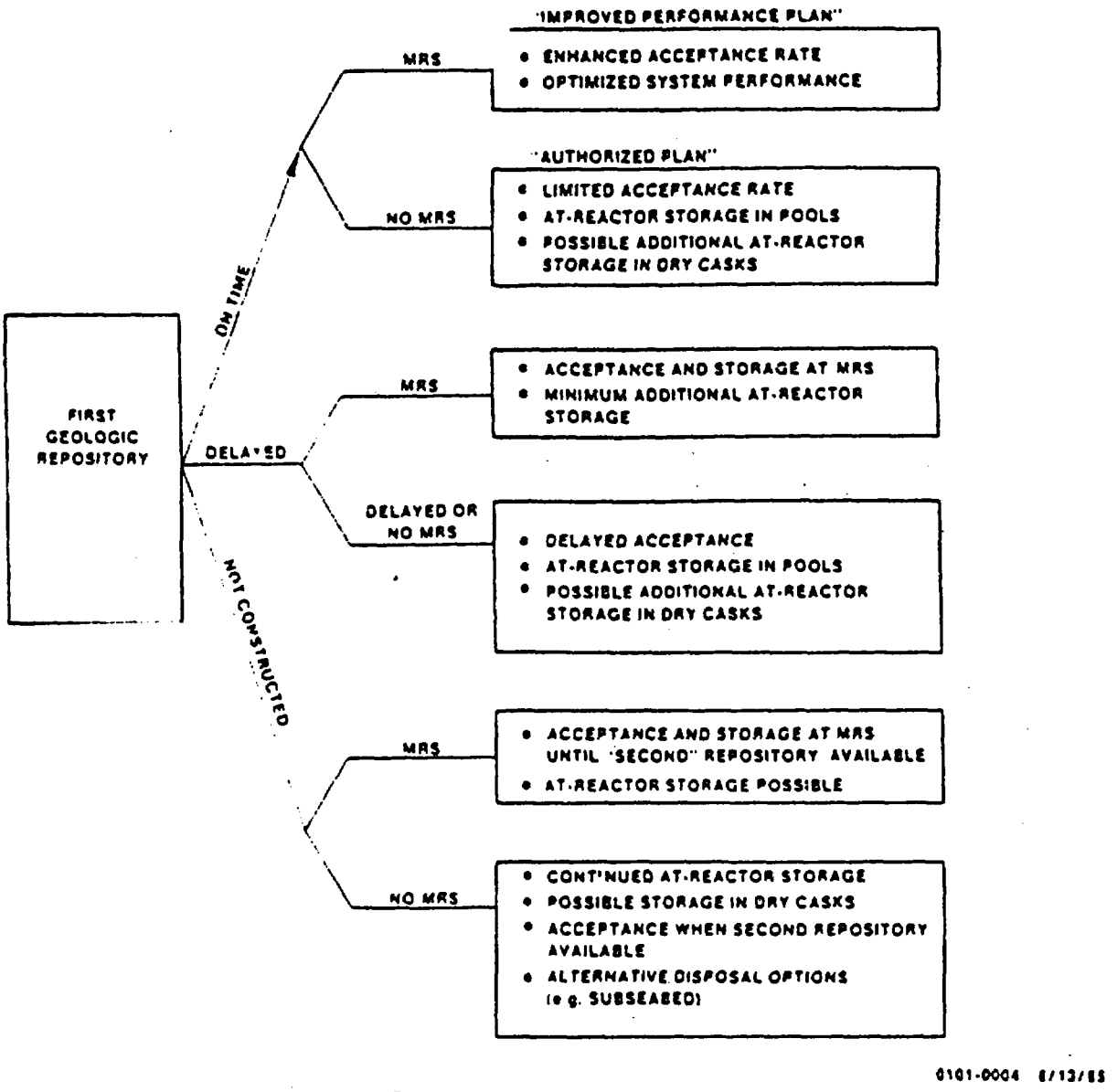

Figure 3. Contingency plans

then become the first repository) and becomes operational. If an MRS facility has not been authorized, spent fuel will continue to be stored at reactor sites in spent-fuel pools and possibly in dry storage.

Should no repository be constructed and an MRS facility not be authorized, utilities would continue to be responsible for storing the spent fuel at reactor sites. In this event, the Nation would return to the situation where it had no viable, assured method for the permanent disposal of spent fuel and high-level waste. It should be added that a number of other methods of disposal have been proposed and evaluated in the past. In accordance with the Act, research and development continues on some techniques (e.g., subseabed disposal), and, should future progress demonstrate their practicality, they would be considered in program decisionmaking.

Contingency plans are being further developed for each of the program areas below the level of detail discussed in this chapter. More information on these contingency plans is provided in the subsequent chapters of this Mission Plan and in various program documents listed in the bibliography.

Contingency plans will continue to be pursued as necessary until a satisfactory solution has been demonstrated. Failure to solve this national problem would prolong the potential risks resulting from the dispersed accumulation of radioactive waste--risks that Congress appropriately recognized and responded to by passing the Nuclear Waste Policy Act.

In summary, the DOE plans to conduct those authorized activities that will lead to a capability to permanently dispose of spent fuel and high-level waste. The DOE will evaluate, propose, and, where appropriate, add features that will enhance the credibility, reliability, and performance of the program. The DOE will continue to prepare contingency plans that could become operational as needed in the future.

5. ADDITIONAL CONSIDERATIONS

A number of additional factors must be considered in understanding and carrying out the strategy of the program. Some of the principal factors are briefly discussed below.

5.1 Defense Waste

The President recently accepted the DOE's confirmation of the Act's presumption that high-level waste generated in defense programs should be emplaced in one or more of the civilian geologic repositories. This conclusion emerged from an evaluation of the use of the civilian repositories for the disposal of such defense waste. Since the evaluation concluded that there are no compelling reasons related to health and safety, national security, regulations, transportation, or public acceptability to develop, build, and operate a repository for defense waste only, the DOE is planning to emplace defense waste in the civilian repositories. Negotiations are under way with other DOE offices to both establish an equitable cost-sharing method and to develop a waste-acceptance schedule that integrates the two major waste streams.

5.2 Other High-Level Wastes

The Act includes in the definition of high-level radioactive waste "other highly radioactive material that the [Nuclear Regulatory] Commission, consistent with existing law, determines by rule requires permanent isolation." There are a number of additional wastes that may be designated high-level wastes by virtue of a future NRC rulemaking. The program is maintaining the flexibility to be able to accept wastes, including other DOE-generated defense wastes, that may require permanent disposal. The full costs would be borne by

the owners and generators, and a cost formula and waste-acceptance schedule would be established after such a designation.

5.3 Second Repository

The Act authorizes the DOE to conduct siting activities for a second repository and to submit to Congress a proposal for the authorization of a second repository. Furthermore, the Act stipulates that the first repository is to have a limited capacity until the second repository is in operation. The specified limits are spent fuel containing no more than 70,000 metric tons of uranium (MTU) or the high-level waste resulting from the reprocessing of such a quantity of spent fuel. Since current projections indicate that approximately 130,000 MTU of civilian spent fuel will require disposal through the year 2020, a second repository is required to accommodate the expected inventory. In the discussion of Section 6, the operating assumption, consistent with the intent of the Act, is that there will be at least two repositories.

6. PROGRAM ASSUMPTIONS FOR WASTE-SYSTEM COMPONENTS

Table 1 presents a select set of reference assumptions currently used in program planning and development. These assumptions cover the types and quantities of waste to be disposed of in a repository, the modes by which the waste will be transported and the expected distances, and the capacities and schedules for the two repositories and the MRS facility. The assumptions and their interrelationships are subject to change on the basis of future Congressional actions, DOE recommendations, future rates of spent-fuel generation, actual program progress, technological advancements, and a host of other variables. The values or ranges specified in Table 1 are intended to provide a representative magnitude of system-component capability. The various components can be adjusted as future conditions warrant.

Table 1. Program Assumptions About the Waste and the Components of the Waste-Management System

---

I. ASSUMPTIONS ABOUT THE WASTE

A. <u>Waste Types</u>

1. Spent fuel from commercial nuclear reactors is the dominant waste form. The spent-fuel assemblies are assumed to be consolidated and packaged before emplacement in a geologic repository.

2. Existing commercial high-level waste (from the West Valley Demonstration Project) is assumed to be accepted for disposal. No new commercial high-level waste is assumed to require disposal.

Table 1. Program Assumptions About the Waste and the Components of the Waste-Management System (Continued).

I. ASSUMPTIONS ABOUT THE WASTE (Continued)

A. Waste Types (Continued)

3. Defense high-level waste requiring disposal in a geologic repository will be accepted by the civilian waste-management system.

4. Other wastes determined by the Nuclear Regulatory Commission to require permanent geologic disposal will be accepted.

B. Waste Quantities

1. The Energy Information Administration (EIA) "middle-case" forecast of 130,000 metric tons of uranium (MTU) for the cumulative spent-fuel generation through the year 2020 is assumed. The EIA forecast assumes a constant level of fuel burnup in the reactor for the entire projection period; the design implications of extended fuel burnup are being examined. Other projections are being monitored.

2. Approximately 650 MTU equivalent of commercial high-level waste from West Valley will be accepted at the repository. No additional commercial reprocessing of spent fuel is assumed, although system designs will include the capability to handle solidified high-level waste from commercial reprocessing.

3. Defense waste will be accepted at approximately the rate of its generation from the atomic energy defense facilities. It is assumed that approximately 20,000 canisters of solidified high-level defense waste will be available for geologic disposal by the year 2020. The actual quantities and the acceptance rate have not yet been determined; they are the subject of current analyses by the DOE.

C. Waste Age

The spent fuel received for disposal is assumed to have a minimum cooling age of 5 years, although certain system-component designs are based on receiving fuel that has a maximum decay-heat rate of 1 kilowatt per metric ton of uranium, which is equivalent to current pressurized-water-reactor spent fuel that has been discharged from the reactor for approximately 10 years. This assumption will be reviewed to determine the effects of age on system performance and cost effectiveness.

Table 1. Program Assumptions About the Waste and the Components of the Waste-Management System (Continued)

II. ASSUMPTIONS ABOUT TRANSPORTATION

A. Shipment Mode

From reactors to the repository or to the MRS facility (if authorized by Congress): 70 percent by rail, 30 percent by truck.

From the MRS facility to the repository: 100 percent by rail.

B. Distance Traveled

Average distances for potential routes from reactors to a repository in the indicated host rock or to the MRS facility are presented below in the first two columns. For waste shipped first to the MRS facility, the last column shows distances from the MRS facility to the repository.

	Distance (miles)		
	Reactors to facility		MRS to repository
Facility	Truck	Rail	Rail
Basalt repository	2190	2360	2590
Salt repository	1320	1450	1250
Tuff repository	2040	2270	2380
Crystalline-rock repository	760	900	610
MRS facility	790	920	--

III. ASSUMPTIONS ABOUT AN MRS FACILITY

A. Proposed Capacity

The authorized capacity will be proposed to be 15,000 MTU.

B. Waste Receipt Rate

The waste-acceptance rate will be approximately 3000 MTU per year of spent fuel or equivalent high-level waste.

C. MRS Startup Dates

The MRS facility will begin operations as early as 1996. In 1998, after a 2-year ramp-up period, the MRS facility will achieve the design acceptance rate.

Table 1. Program Assumptions About the Waste and the Components of the Waste-Management System (Continued)

IV. ASSUMPTIONS ABOUT GEOLOGIC REPOSITORIES

A. Number of Repositories

Two

B. Design Capacity for Each Repository

The design capacity for each of the two repositories is assumed to be 70,000 MTU. The capacity for both repositories can be expanded if the geologic conditions permit, but the capacity of the first repository cannot exceed 70,000 MTU until the second repository begins operation.

C. Repository-Startup Dates for the Authorized System

The operation of the first repository will be conducted in two phases, with phase 1 starting operation in 1998 and phase 2 starting operation in 2001. The second repository will start receiving spent fuel in 2006.

D. Host-Rock Options

Basalt, salt, and tuff for the first repository; two of the first-repository host rocks and crystalline rock (granite) for the second repository.

E. Other Design Assumptions

Designs include provision to maintain capability to begin waste retrieval for up to 50 years from the date on which the first waste package is emplaced.

7. WASTE-ACCEPTANCE SCHEDULES

The DOE is committed to accept waste from the signatories of the standard disposal contracts on a firm schedule that begins no later than January 31, 1998. Table 2 shows a schedule that is based on the current estimated emplacement capacities of the two planned geologic repositories, one of which is currently authorized. This schedule accords with the repository schedules and attendant operating characteristics presented in this document.

On the basis of the integrated system approach described in the improved-performance plan (Section 3), the DOE has identified many possible waste-acceptance schedules, depending on the size and the operating characteristics of the system facilities. One such waste-acceptance schedule that illustrates

Table 2. Waste-Acceptance Schedule--Authorized System
(Metric tons of uranium (MTU) per year)

Year	Spent-Fuel Generation[a] Annual	Spent-Fuel Generation[a] Cumulative	First Repository Spent Fuel	First Repository High-Level Waste[b,c]	First Repository Total	First Repository Cumulative	Second Repository Spent Fuel	Second Repository Cumulative	Cumulative Spent-Fuel Acceptance	Spent-Fuel Backlog
Pre 1998		40,100								40,100
1998	2900	43,000	400		400	400			400	42,600
1999	3000	46,000	400		400	800			800	45,200
2000	3000	49,000	400		400	1,200			1,200	47,800
2001	3000	52,000	900		900	2,100			2,100	49,900
2002	3000	55,000	1800		1800	3,900			3,900	51,100
2003	3100	58,100	3000	400	3400	7,300			6,900	61,200
2004	3300	61,400	3000	400	3400	10,700			9,900	51,500
2005	3400	64,800	3000	400	3400	14,100			12,900	61,900
2006	3800	68,600	3000	400	3400	17,500	900	900	16,800	51,800
2007	4100	72,700	3000	400	3400	20,900	1800	2,700	21,600	51,100
2008	4700	77,400	3000	400	3400	24,300	1800	4,500	26,400	51,000
2009	4500	81,900	3000	400	3400	27,700	1800	6,300	31,200	50,700
2010	4500	86,400	3000	400	3400	31,100	1800	8,100	36,000	50,400
2011	4000	90,400	3000	400	3400	34,500	2400	10,500	41,400	49,000
2012	4100	94,500	3000	400	3400	37,900	3000	13,500	47,400	47,100
2013	4200	98,700	3000	400	3400	41,300	3000	16,500	53,400	45,300
2014	4200	102,900	3000	400	3400	44,700	3000	19,500	59,400	43,500
2015	4300	107,200	3000	400	3400	48,100	3000	22,500	65,400	41,800
2016	4300	111,500	3000	400	3400	51,500	3000	25,500	71,400	40,100
2017	4500	116,000	3000	400	3400	54,900	3000	28,500	77,400	38,600
2018	4700	120,700	3000	400	3400	58,300	3000	31,500	83,400	37,300
2019	4700	125,400	3000	400	3400	61,700	3000	34,500	89,400	36,000
2020	4900	130,300	3000	400	3400	65,100	3000	37,500	95,400	34,900
2021[d]			3000	400	3400	68,500	3000	40,500	101,400	28,900
2022			1100	400	1500	70,000	3000	43,500	105,500	24,800
2023							3000	46,500	108,500	21,800
2024							3000	49,500	111,500	18,800
2025							3000	52,500	114,500	15,800
2026				8000[e]			3000	55,500	117,500	12,800
2027							3000	58,500	120,500	9,800
2028							3000	61,500	123,500	6,800
2029							3000	64,500	126,500	3,800
2030							3000	67,500	129,500	800
2031							800	68,300	130,300	

[a]Data from Commercial Nuclear Power 1984: Prospects for the United States and the World, DOE/EIA 0438(84), November 1984. Includes discharge from decommissioned reactors.

[b]Approximate waste-acceptance rates for high-level waste from atomic energy defense activities and commercial high-level waste from the West Valley Demonstration Project. Quantities have been "normalized" to metric tons of uranium (MTUs) on a curie-equivalent basis. Direct comparison with spent fuel is not equivalent, because defense high-level waste (DHLW) and commercial high-level waste (CHLW) resulted from the reprocessing of spent fuel. In the example, 400 MTU of defense waste equals 800 canisters. Actual acceptance rates are to be negotiated between Defense Programs and the Office of Civilian Radioactive Waste Management in the DOE.

[c]The first repository currently is designed to begin operation in two phases. This example shows the acceptance of DHLW and CHLW in the first phase when the second phase reaches its maximum receipt rate.

[d]The Energy Information Administration projects spent-fuel generation only through the year 2020. For waste created after 2020, either the capacity of the first two repositories could be increased or additional repositories could be built.

[e]The example shows a total of 8000 MTU of DHLW and CHLW emplaced by the year 2022. Additional DHLW can be accommodated by extending the operation of the first repository, emplacing DHLW in the second repository, or constructing additional repositories, as indicated in footnote D.

Table 3. Waste-Acceptance Schedule--Improved-Performance System
(Metric tons of uranium (MTU) per year)

Year	Spent-Fuel Generation[a] Annual	Spent-Fuel Generation[a] Cumulative	MRS Acceptance	MRS Inventory[b]	First Repository: SF from MRS	First Repository: High-Level Waste[c]	First Repository: Total	First Repository: Cumulative Total Waste	Second Repository: Spent Fuel	Second Repository: Cumulative	Cumulative Spent-Fuel Acceptance	Spent-Fuel Backlog
1998		40,100	2200	2,200							2,200	37,900
1998	2900	43,000	3000	4,800	400		400	400			6,200	37,800
1999	3000	46,000	3000	7,400	400		400	800			8,200	37,800
2000	3000	49,000	3000	10,000	400		400	1,200			11,200	37,800
2001	3000	52,000	3000	12,100	900		900	2,100			14,200	37,800
2002	3000	55,000	3000	13,300	1800		1800	3,900			17,200	37,800
2003	3100	58,100	3000	13,300	3000	400	3400	7,300			20,200	37,900
2004	3300	61,400	3000	13,300	3000	400	3400	10,700			23,200	38,200
2005	3400	64,800	3000	13,300	3000	400	3400	14,100			26,200	38,600
2006	3800	68,600	3000	13,300	3000	400	3400	17,500	900	900	30,100	38,500
2007	4100	72,700	3000	13,300	3000	400	3400	20,900	1800	2,700	34,900	37,800
2008	4700	77,400	3000	13,300	3000	400	3400	24,300	1800	4,500	39,700	37,700
2009	4500	81,900	3000	13,300	3000	400	3400	27,700	1800	6,300	44,500	37,400
2010	4500	86,400	3000	13,300	3000	400	3400	31,100	1800	8,100	49,300	37,100
2011	4000	90,400	3000	13,300	3000	400	3400	34,500	2400	10,500	54,700	35,700
2012	4100	94,500	3000	13,300	3000	400	3400	37,900	3000	13,500	60,700	33,800
2013	4200	98,700	3000	13,300	3000	400	3400	41,300	3000	16,500	66,700	32,000
2014	4200	102,900	3000	13,300	3000	400	3400	44,700	3000	19,500	72,700	30,200
2015	4300	107,200	3000	13,300	3000	400	3400	48,100	3000	22,500	78,700	28,500
2016	4300	111,500	3000	13,300	3000	400	3400	51,500	3000	25,500	84,700	26,800
2017	4500	116,000	2800	13,100	3000	400	3400	54,900	3000	28,500	90,500	25,500
2018	4700	120,700		10,100	3000	400	3400	58,300	3000	31,500	93,500	27,200
2019	4700	125,400		7,100	3000	400	3400	61,700	3000	34,500	96,500	28,900
2020	4900	130,300		4,100	3000	400	3400	65,100	3000	37,500	99,500	30,800
2021				1,100	3000	400	3400	68,500	3000	40,500	102,500	27,800
2022					1100	400	1500	70,000	3000	43,500	105,500	24,800
2023									3000	46,500	108,500	21,800
2024									3000	49,500	111,500	18,800
2025									3000	52,500	114,500	15,800
2026						8000			3000	55,500	117,500	12,800
2027									3000	58,500	120,500	9,800
2028									3000	61,500	123,500	6,800
2029									3000	64,500	126,500	3,800
2030									3000	67,500	129,500	800
2031									800	68,300	130,300	

[a]Data from Commercial Nuclear Power 1984: Prospects for the United States and the World, DOE/EIA 0438(84), November 1984. Includes discharge from decommissioned reactors.

[b]The MRS facility is assumed to reach a constant acceptance rate and discharge to the first repository as fast as the first repository can accept spent fuel. The MRS facility will stop accepting spent fuel when its inventory will fill the first repository.

[c]See footnotes b and c in Table 2.

the quantities of waste the DOE could accept beginning in 1996 with the completion of an integral MRS facility is presented in Table 3. This schedule assumes that one MRS facility services the first repository. Other scenarios are possible, such as a larger MRS facility servicing part or all of both repositories, or two MRS facilities servicing two repositories.

Included in Tables 2 and 3 are possible acceptance schedules for defense high-level waste (DHLW) produced in national defense programs and commercial high-level waste (CHLW) from the West Valley Demonstration Project. These schedules are based on the assumption that the DHLW and CHLW would be emplaced in phase 1 of the first repository after phase 2 begins operating and reaches its design capacity (see the Mission Plan for a discussion of the first-repository phases). These schedules are for illustrative purposes only at this time. The amount of defense waste to be disposed of in the repository, and the actual acceptance rates, have not yet been determined by the DOE.

A comparison of the two acceptance schedules shows the following advantages of the improved-performance plan over the authorized plan for the acceptance of civilian spent fuel:

1. Spent-fuel acceptance can begin as soon as the integral MRS facility begins operation, possibly 1 to 2 years ahead of the repository.

2. System waste-acceptance rates with the integral MRS facility ramp up and reach the design level sooner, thus easing the problem of spent-fuel storage during the critical years around 1998.

3. In the particular example depicted in Table 3, the spent-fuel backlog after 1998 never exceeds the cumulative spent-fuel inventory in 1998. In other words, with the exception of a few years just before the startup of the second repository, the acceptance rate matches or exceeds the rate of spent-fuel generation after 1998.

The choice of the receipt rate for the integral MRS facility establishes the bounds by which the integrated waste-management system would accept and package spent fuel during the critical years from 1998 to the startup of the second repository in 2006. The rate at which the integral MRS facility would accept spent fuel is based on two major considerations:

1. The need to relieve the utilities of onsite-fuel-storage pressures that could result in the disruption of orderly nuclear reactor operations after January 31, 1998.

2. The need to operate the overall system in an orderly, cost-effective manner, which implies the handling of suitably aged nuclear fuel and the maintenance of fairly constant receipt and packaging rates over extended periods of time.

The representative waste-acceptance schedule for the improved-performance system described in this chapter is designed to achieve the following DOE objectives:

1. Accept civilian spent fuel at an annual rate that will allow the utilities to maintain orderly operations of their nuclear power plants, recognizing that the oldest spent fuel will have the highest priority for acceptance consistent with the DOE's current contracts with the waste generators.

2. Accept the current planning-base spent-fuel inventory of 130,000 MTU consistent with the objective of cost-effective operations while providing tangible evidence that the DOE fully intends to dispose of spent fuel in a timely manner.

3. Ensure that the rate of defense-waste acceptance does not disrupt the orderly and timely acceptance of spent fuel and civilian high-level waste.

4. Emplace the inventory of defense waste in a repository in a timely manner after the waste has been solidified and encapsulated. This objective accords with the President's decision to dispose of defense waste in a civilian geologic repository in a cost-effective manner.

It should be emphasized that this schedule is only an approximation of how the system may operate and is subject to considerable variation. The DOE will further define and specify the system acceptance parameters as the program progresses.

Should the Congress decide not to authorize an integrated MRS facility, the waste-acceptance schedule shown in Table 2 is an example of a plan the DOE is likely to follow.

The DOE will continue to use the Energy Information Administration's "middle-case" forecasts of gross electricity generation by nuclear power plants and the attendant spent-fuel discharges as the principal planning basis for the overall waste-management program. The DOE will consider other forecasts of nuclear power growth as conditions warrant. The waste-acceptance schedule will serve as a planning base that will be updated annually in response to the latest forecasts of nuclear power growth. Under the terms of the contracts for disposal services that have been signed between the DOE and the utilities, an annual capacity report with projected annual receiving capacities and rankings will be issued by the DOE beginning in 1987. In 1991, the DOE will begin to publish firm waste-acceptance schedules for individual reactors, including shipment allocations.

Agenda for ACRS
Meeting on February 14, 1986
5:00 p.m.
Room 1046, H Street

RECENT SIGNIFICANT EVENTS

Date	Plant	Event	Presenter/Office telephone	Page
11/3/85	McGuire 1	Start-Up with Degraded HPSI System	J. Giitter, IE 492-9001	2
1/7/86	Turkey Point	Stop Check Valve Failures	R. Kiessel, IE 492-8119	4
	----	Technical Specification Improvement Program	E. Butcher, NRR 492-4720	7

OTHER ITEMS OF INTERESET (No formal presentation)

1/14/86	ANO 1	Design Deficiency in Emergency Feedwater System		11

McGUIRE UNIT 1 - START-UP WITH DEGRADED HPSI SYSTEM
NOVEMBER 3, 1985 (J. GIITTER, IE)

- PROBLEM: FAILURE TO REPAIR VCT ISOLATION VALVE MOTOR OPERATORS PRIOR TO START-UP WOULD HAVE PREVENTED VCT ISOLATION ON SI SIGNAL.

- SAFETY SIGNIFICANCE: HPSI MAY NOT HAVE FUNCTIONED AS REQUIRED ON A REAL DEMAND.

- DISCUSSION:

  - AT 0640 ON NOVEMBER 2, A LOSS OF INST. AIR (SHARED BY BOTH UNITS) CAUSED BOTH UNITS TO TRIP AND SAFETY INJECTION IN UNIT-1.

  - VCT ISOL. VALVES CLOSED AS REQUIRED; HOWEVER, THE VALVE MOTOR OPERATORS WERE LATER FOUND BURNED OUT.

  - PRIOR TO START-UP, OPERATORS MANUALLY OPENED VALVES, BUT DID NOT REPAIR THE MOTOR OPERATORS.

  - UNIT START-UP COMMENCED AT ABOUT 0600 ON 11/3. THE UNIT WAS IN MODE 2 FOR ABOUT 6 HOURS.

  - TWO MAJOR CONCERNS 1) IS BORON CONC. LESS THAN THAT ASSUMED IN SAFETY ANALYSIS? AND 2) COULD VCT COVER (H_2 AND N_2) BECOME ENTRAINED IN THE CHARGING PUMP SUCTION PATH RESULTING IN GAS BINDING OF PUMPS?

  - NRC (OP CENTER) WAS NOTIFIED AT 1218 ON 1/14/86.

- FOLLOW-UP:

  - ENFORCEMENT CONFERENCE SCHEDULED FOR FEBRUARY 28TH.

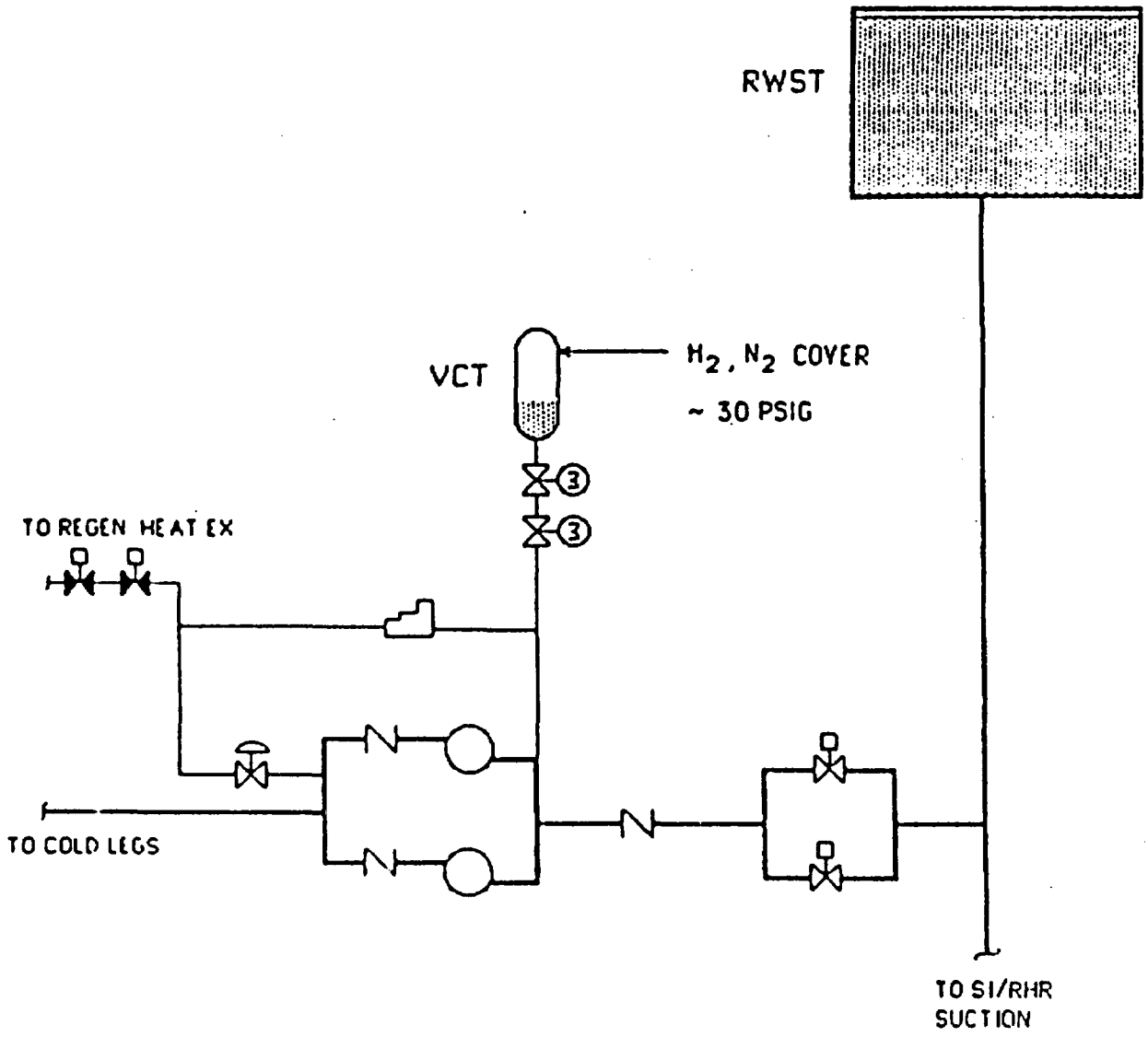
RWST
VCT
H_2, N_2 COVER
~ 30 PSIG
3
3
TO REGEN HEAT EX
TO COLD LEGS
TO SI/RHR
SUCTION

TURKEY POINT UNITS 3 AND 4 - STOP CHECK VALVE FAILURES NOV. 1985 THRU JAN. 1986 - (R. KIESSEL, IE)

PROBLEM: AFW STOP CHECK VALVE GUIDE PIN FAILURES

SAFETY SIGNIFICANCE: AFW VALVE/SYSTEM CONCERNS AND GENERIC IMPLICATIONS OF LOW FLOW THROUGH CHECK VALVES

CIRCUMSTANCES:

- BETWEEN NOV. 1985 AND JAN. 1986, NUMEROUS FAILURES OF STOP CHECK VALVES IN STEAM SUPPLY SYSTEM TO AFW PUMPS
- STOP CHECK VALVES LOCATED UPSTREAM AND DOWNSTREAM OF MOTOR OPERATED VALVES THAT OPENS WHEN REQUIRED TO INITIATE FLOW
- STOP CHECK NORMALLY OPEN - PREVENTS BACKFLOW IN EVENT OF STEAM LINE BREAK
- MODE OF FAILURE - DEGRADATION OF DISC AND DISC NUT
- FAILURE DUE TO LOW STEAM FLOW CONDITIONS CAUSED BY SLIGHT LEAKAGE OF NORMALLY CLOSED MOV
- LOW FLOW CAUSED VIBRATION AND CHATTERING BREAKING DISC GUIDE FROM DISC
- LOOSE DISC GUIDE PREVENTED FULL CLOSURE AND FULL OPENING OF VALVE. ALSO FREE TO TRAVEL

FOLLOWUP:

- AFW SYSTEM WAS INSPECTED
- ALL MISSING GUIDE PINS LOCATED AND REMOVED
- ALL VALVES REPAIRED WITH HIGHER STRENGTH MATERIAL USED IN DISC GUIDE
- FAILURE ANALYSIS AND METALLURGICAL EXAMINATIONS PERFORMED
- LICENSEE COMMITTED TO REGULAR RADIOGRAPHIC EXAMINATION OF VALVES
- LICENSEE CONSIDERS THIS AS INTERIM REPAIR PENDING COMPLETION OF THE STUDY BY ITS AFW ENHANCEMENT TASK FORCE
- INFORMATION NOTICE 86-09, "FAILURE OF CHECK AND STOP CHECK VALVES SUBJECTED TO LOW FLOW CONDITIONS" WAS ISSUED FEBRUARY 3, 1986

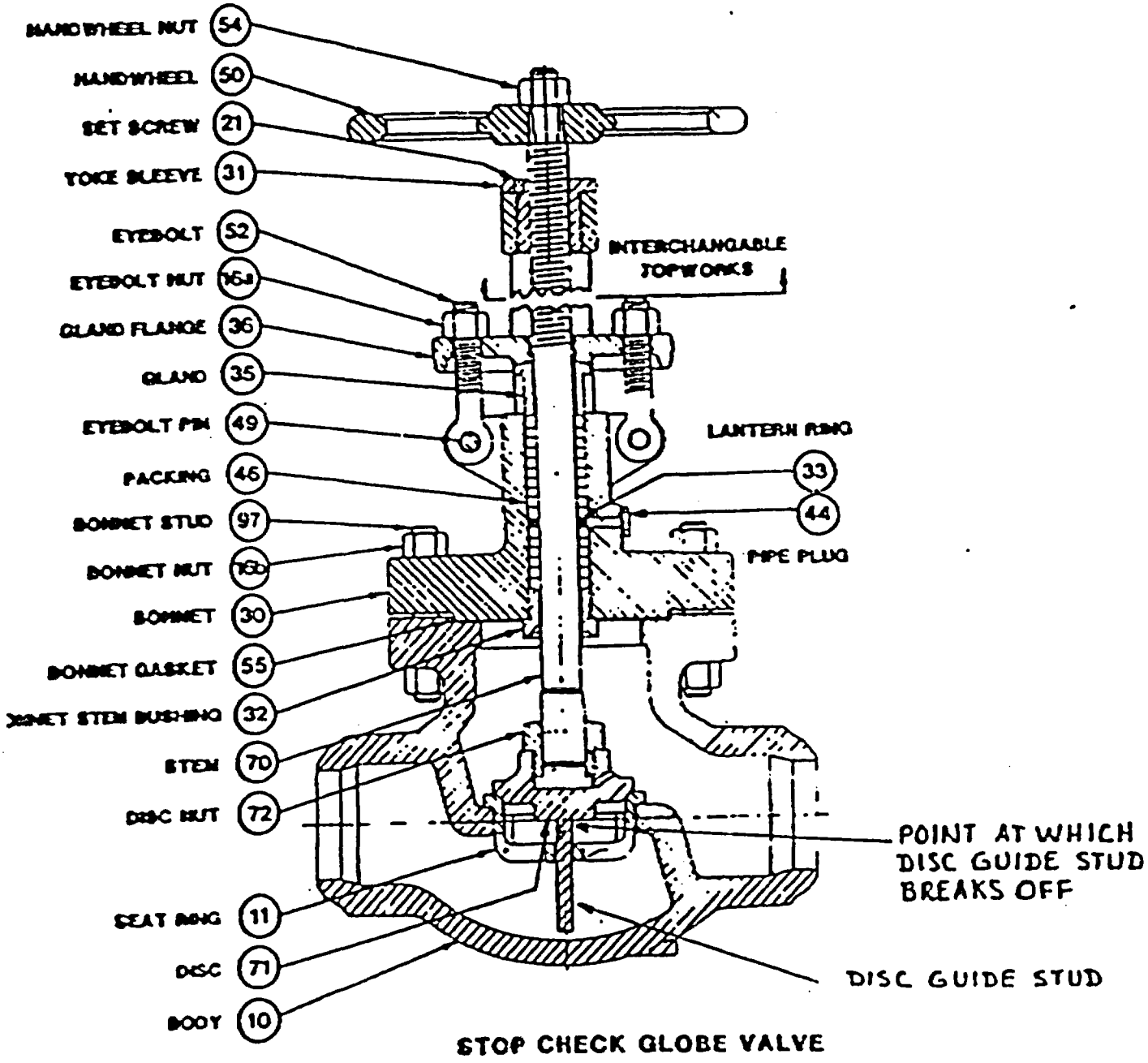

STOP CHECK GLOBE VALVE

P & I DIAGRAM

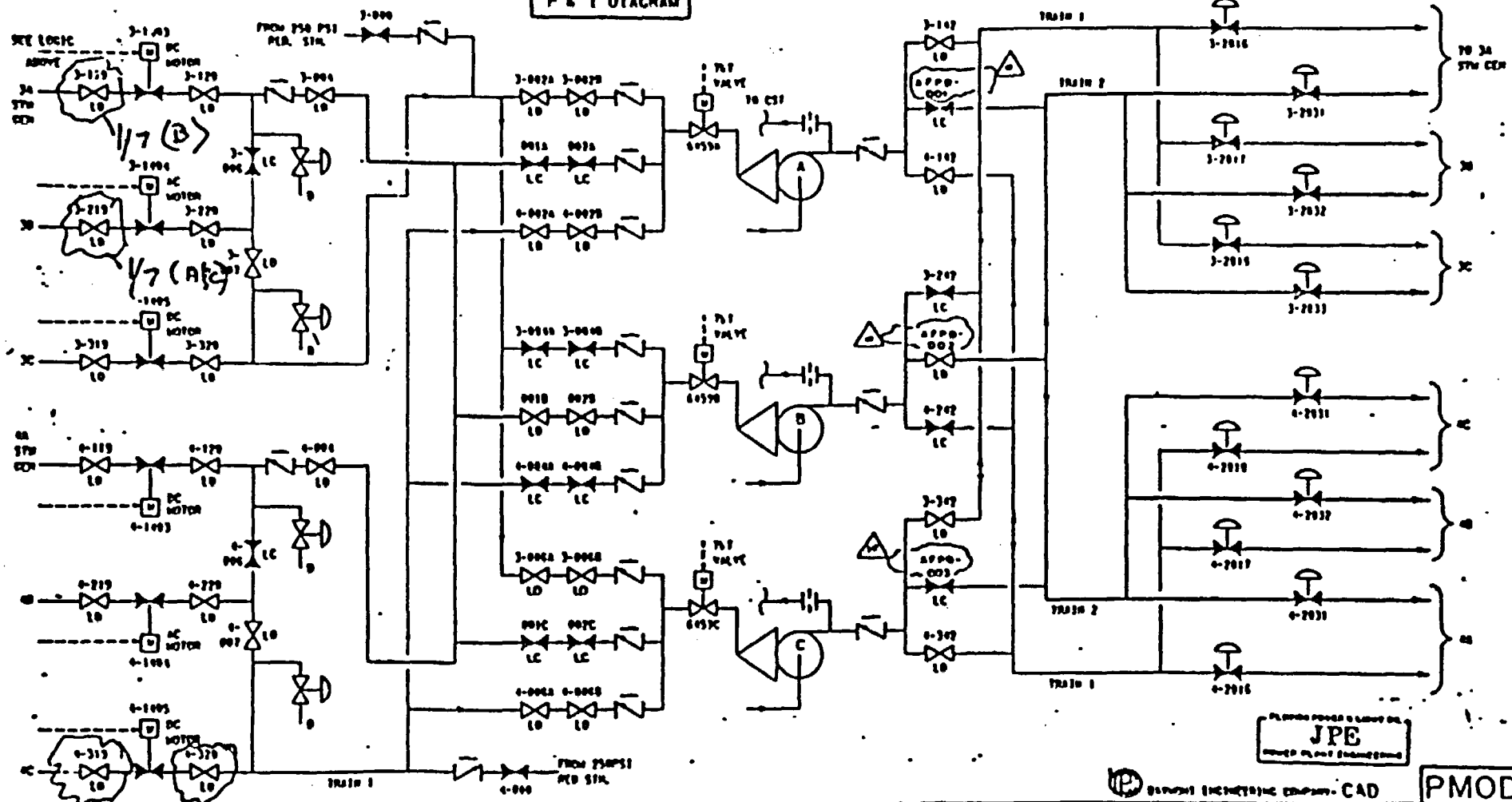

JPE

DAVIDSON ENGINEERING COMPANY CAD

PMOD

REVISION	BY	CK.	COR.	APP.	ED	NO.	DATE	REVISION	BY	CK.	COR.	APP.
						10	7/14/80	AS-BUILT PER DWG-001	JD	JH	PE	PJ
						9	4/2/80	AS-BUILT PER DWG-159	RB	JH	WC	W
						8	5/21/79	MARKED AS-BUILT FOR PCN 80-04	DEVLIN	JS	JK	L
						7	5/14/79	REVISED AS-BUILT PER PCN 78-[illegible]	[illegible]	JS	JK	W

FLORIDA POWER & LIGHT CO.

TURKEY POINT PLANT
UNITS 3 & 4
AUXILIARY FEEDWATER
PUMP START
LOGIC, P&I AND CONTROL SYST.

DRAWN BY: [illegible]
CHECKED BY: [illegible]
APPROVED BY: [illegible]
DATE: 5/14/79

5610-T-L1
SHEET 15

REV. 10

NRR TECHNICAL SPECIFICATION IMPROVEMENT PROGRAM (TSIP)

(E. Butcher, NRR, DHFT)

NEED FOR TSIP

- TOO MANY SPECS - LESS IMPORTANT ONES THUS DETRACTING FROM IMPORTANT ONES
- SIZE AND COMPLEXITY OF TS
- INDUSTRY AVAILABILITY RECORD
- NOT OPERATOR ORIENTED
- FINDINGS OF NUREG-1024 "TECHNICAL SPECIFICATIONS-ENHANCING THE SAFETY IMPACT"

PROBLEM IDENTIFICATION

- IDENTIFIED PROBLEMS BY INTERVIEWS, DOCUMENT REVIEWS, AND CONTRACTOR ASSISTANCE
- IDENTIFIED THREE PROBLEM AREAS
  - LACK OF WELL-DEFINED CRITERIA FOR TS
  - HUMAN FACTORS AND TECHNICAL WEAKNESSES
  - RELUCTANCE OF THE NRC STAFF TO USE TOOLS OTHER THAN TS

TECHNICAL SPECIFICATION IMPROVEMENT PROJECT RECOMMENDATIONS

(1) A COMMISSION POLICY STATEMENT SHOULD BE ISSUED WHICH DEFINES THE SCOPE AND PURPOSE OF TECHNICAL SPECIFICATIONS AND ENCOURAGES LICENSEES TO IMPLEMENT A PROGRAM TO UPGRADE THEIR TECHNICAL SPECIFICATIONS."

(2) THE NRC SHOULD GIVE INCREASED ATTENTION TO CHANGES MADE BY LICENSEES USING THE 10 CFR 50.59 PROCESS.

(3) THE NRC SHOULD REVIEW AND REVISE THE STANDARD TECHNICAL SPECIFICATIONS TO CORRECT HUMAN FACTORS AND OTHER TECHNICAL WEAKNESSES THROUGH A PROGRAM OF TECHNICAL ASSISTANCE AND DEDICATED IN-HOUSE TECHNICAL RESOURCES.

(4) THE NRC SHOULD ENCOURAGE THE CONTINUED DEVELOPMENT AND APPLICATION OF PROBABILISTIC RISK ASSESSMENT METHODS TO ADDRESS TECHNICAL SPECIFICATIONS REQUIREMENTS."

CRITERIA FOR TS CONTENT

- AN INSTALLED SYSTEM THAT IS USED TO DETECT, BY MONITORS IN THE CONTROL ROOM, A SIGNIFICANT ABNORMAL DEGRADATION OF THE REACTOR COOLANT PRESSURE BOUNDARY.

- A PROCESS VARIABLE THAT IS AN INITIAL CONDITION OF A DBA ANALYSIS.

- A STRUCTURE, SYSTEM, OR COMPONENT THAT IS PART OF THE PRIMARY SUCCESS PATH OF A SAFETY SEQUENCE ANALYSIS AND FUNCTIONS OR ACTUATES TO MITIGATE A DESIGN BASIS ACCIDENT.

ONGOING ACTIVITIES

- TRIAL USE OF TSIP CRITERIA
- MEETINGS WITH INDUSTRY OWNERS GROUPS AND AIF
- SHORT TERM IMPROVEMENTS TO EXISTING STS
  - FIRE PROTECTION TECHNICAL SPECIFICATION
  - ACTION STATEMENTS FOR MISSED SURVEILLANCE TESTS
  - BWR RPS SURVEILLANCE INTERVALS AND AOTs (NEDC-30851P)
  - BWR ECCS INSTRUMENTATION SURVEILLANCE INTERVALS AND AOTs (NEDC-30936P)
- EVALUATION OF COMMENTS ON TSIP REPORT

FUTURE ACTIVITIES

- DETAILED IMPLEMENTATION PROGRAM PLAN - 03/86
- PROPOSED COMMISSION POLICY STATEMENT - 06/86
- ULTIMATE LONG TERM OBJECTIVE

  "A COMPLETE REWRITE/STREAMLINING" OF THE EXISTING STS BASED ON THE RECOMMENDATIONS OF THE TSIP REPORT

ARKANSAS NUCLEAR ONE UNIT 1 - DESIGN DEFICIENCY IN EMERGENCY FEEDWATER SYSTEM (EFW)
JANUARY 14, 1986 - (G. VISSING, NRR)

PROBLEM:

- DESIGN DEFICIENCY IN THE EMERGENCY FEEDWATER SYSTEM (EFW)

SIGNIFICANCE:

- POTENTIAL FOR LOSS OF ALL EFW AND BLOWDOWN OF BOTH STEAM GENERATORS, DURING STEAM LINE BREAK WITH SINGLE FAILURE OF ONE A/C BUS

CIRCUMSTANCES:

- DEFICIENCY DISCOVERED BY IE INSPECTION TEAM
- DURING POSTULATED STEAM LINE BREAK CONCURRENT WITH LOSS OF RED A/C POWER BUS, TURBINE DRIVEN AND MOTOR DRIVEN EFW PUMPS WOULD BE LOST
- POSSIBLE BLOWDOWN OF BOTH S/Gs
- DESIGN DOES NOT MEET THE SINGLE FAILURE CRITERION
- PLANT, AT 89% POWER AT THE TIME OF THE DISCOVERY, WENT INTO CONTROLLED SHUTDOWN DUE TO FAILURE OF EDG

FOLLOWUP:

- LICENSEE CONFIRMED EXISTENCE OF DESIGN DEFICIENCY
- LICENSEE TO INSTALL CHECK VALVES IN STEAM LINES FROM EACH OTSG BEFORE STARTUP.
- NRR (PEICSB) REVIEWED ISSUE AND CONCURRED WITH INSPECTION TEAM'S FINDINGS

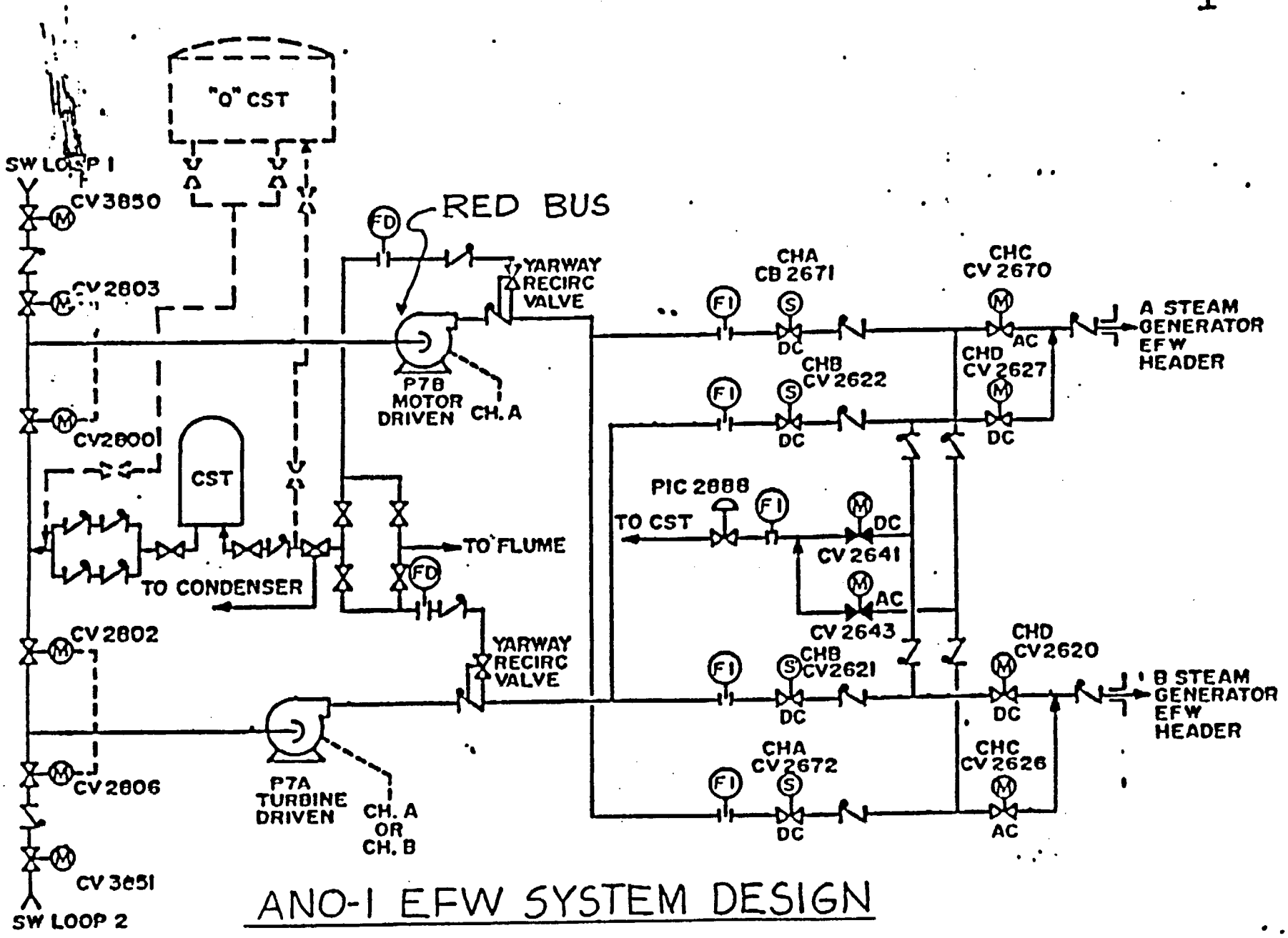

ANO-1 EFW SYSTEM DESIGN

12

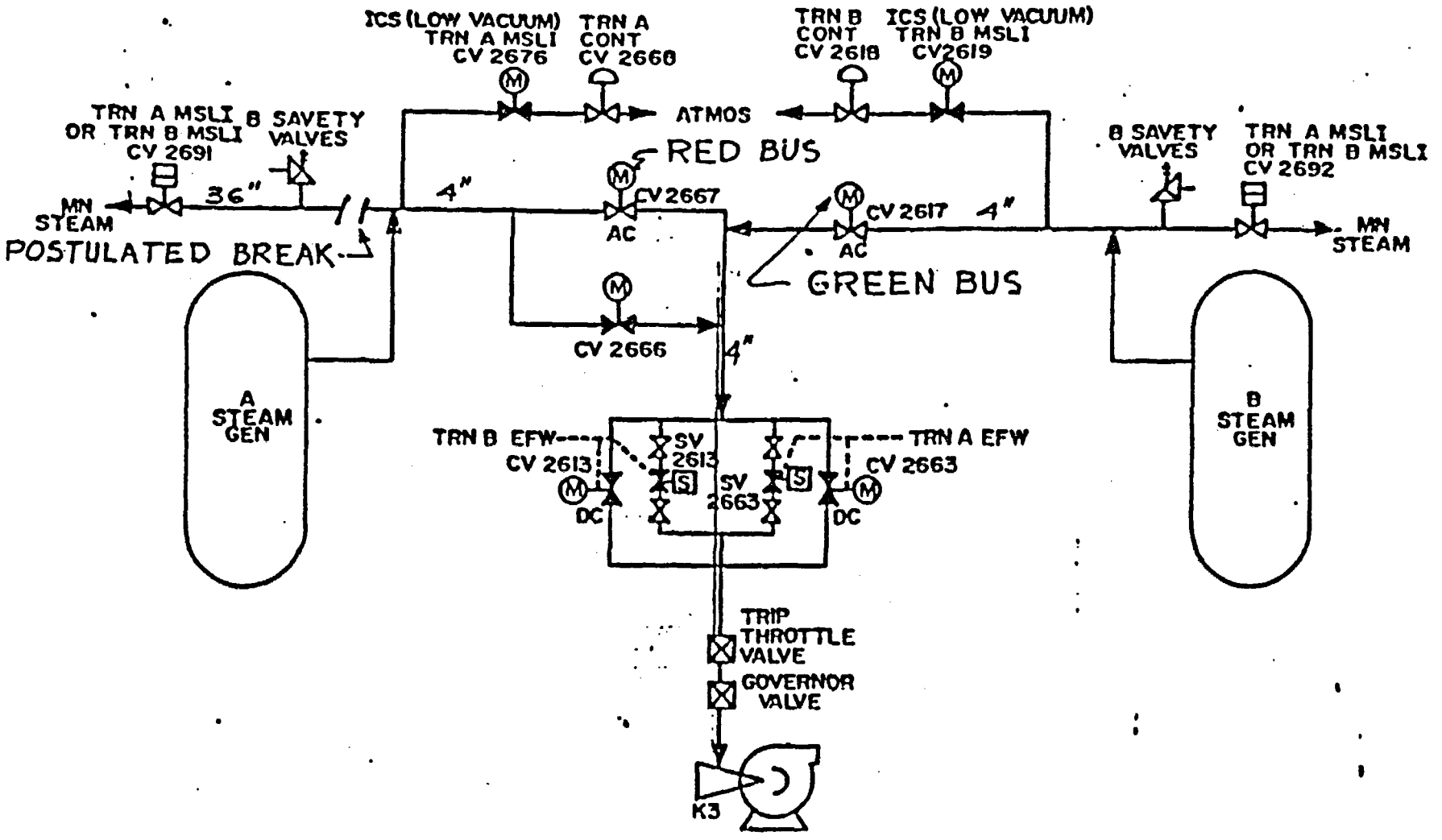

ANO-1 EFW DESIGN (STEAM SYSTEM)

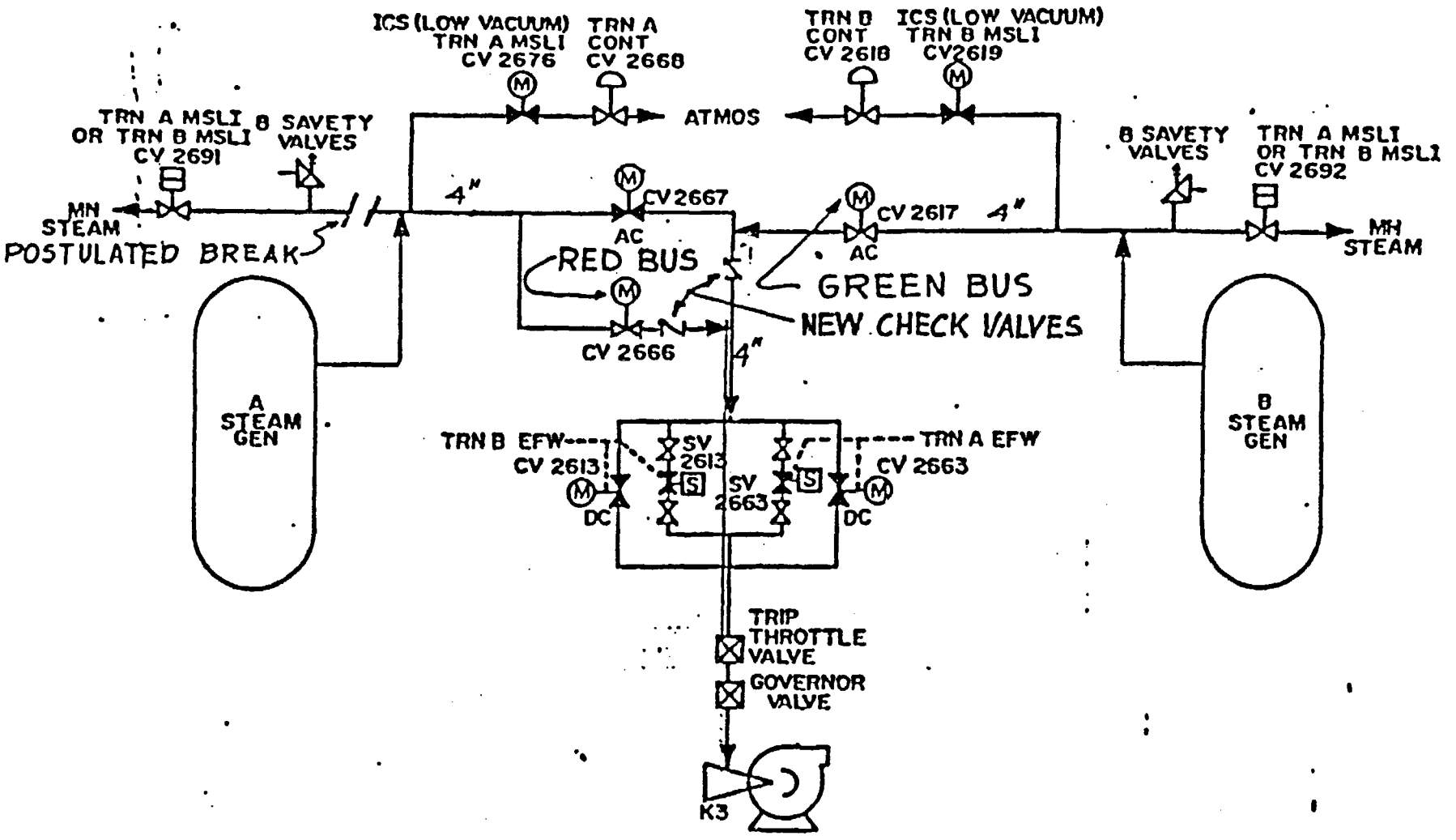

EFW DESIGN CORRECTION

DRAFT

COMMENTS TO ACRS

CHECK OPERATOR PROGRAM

INTRODUCTION

Thank you for this opportunity to present comments concerning the proposed check operator program. I have only a few minutes and I feel I need a few hours to express my deep concerns and skepticism. I base these remarks on discussions with other plant managers; interviews with licensed operators, shift foremen and shift supervisors; and on fifteen years experience at Farley, the last ten of which I have maintained a current SRO license.

POSITION

* The check operator concept discussed here today does not parallel the FAA
* check operator program and if implemented, would not be effective in
* achieving the desired objectives. The basic reason that it would not work
* is because of the many differences between plants of the same type, as well as institutional differences.

BASIS

Significant differences found between plants and institutions for example are as follows:

1. Design
   a. Number of loops
   b. Steam generator design
   c. Controls
2. Organization
   a. Normal
   b. Emergency
   c. On-call
   d. Responsibilities

DRAFT

3. Procedures
   a. Administrative
   b. Operating
   c. Emergency
4. Technical Specifications
   a. Setpoints
   b. Plant specific requirements
   c. Utility negotiated items
5. Emergency planning
6. Operating philosphy
   a. Base load
   b. Load follow
7. INPO relationship (institutional)

FFF - proponent
NRC - advisory

CONSEQUENCES

* Should the check operator program be inappropriately imposed on the
* industry, we would simply have more of the same problems that we now have
* with the NRC administered examinations.

PROBLEM AREAS

The principal problem areas that exist as a result of NRC administered examinations are as follows:

1. Simulator
   a. An objective pass/fail criteria does not exist
   b. Examiners are not fully qualified
      (1) Little or no current operating experience
      (2) No plant specific training or qualification
      (3) Expected response is sometimes contrary to industry standards and plant procedural guidance

DRAFT

c. Inappropriate scenarios

(1) Beyond design basis of plant

(2) Beyond simulator capability

(3) Desired results not achievable

(4) Violate procedures

2. Written - Initial

a. Knowledge requirements sometimes beyond reason

The scope of material against which the NRC examines is so broad that it is not humanly possible to commit it to memory; therefore, a utility must study current trends in NRC questions in order to train candidates to pass the examinations. To illustrate this point, most operators feel that they could not pass a NRC administered examination thirty days or more after initially passing it due to mental decay of crammed information.

b. Knowledge requirements inappropriate.

Many of the knowledge requirements needed to pass the NRC examination are not directly related to operating the plant.

The net result of the above is that approximately one-half of the one year training time for initial operating licensing is spent training the candidate to pass the license examination as opposed to training him to operate.

3. Written - Requalification

In addition to the problems discussed above concerning the written initial examination, a unique problem exists with the requalification examination. The scope of the examination is not limited to the material and lesson objectives that are taught; therefore, the examination results are meaningless with regard to being a measure of the effectiveness of a utility's requalification program.

DRAFT

SOLUTION

* A check operator examination can only be conducted by an SRO with operating
* experience on the subject plant and who is current in the plant's
* requalification program. Also, the program must consist of a valid scope of proficiency ta. ; with definitive criteria for successful completion; that is, the program should reflect a systems approach to training based on plant specific job and task analysis. The utility operators and training program can be effectively verified through the NRC audit process; i. e., by directly observing the licensee examine operators. However, the NRC auditors must be experienced, trained and have valid criteria for their evaluation.

With regard to information sharing benefits that have been discussed concerning this program, it should be noted that many of us are currently involved through INPO with peer evaluation programs in operations and training.

INDUSTRY TRAINING PROGRAM

I believe that the training program at our plant meets the intent of the check operator program by the way we are organized in our training department and by the way we conduct our simulator examinations. Further, I believe that the program is indictive of others in the industry. We currently have ten instructors involved in licensed operator training, all of which hold SRO licenses and have SRO experience on shift in operations. Two have been shift supervisors, four shift foremen, two plant operators, and two Navy operators. We also have a program of rotating shift supervisors and shift foreman into the training department for two year assignments. Currently there is one shift supervisor and one shift foreman

DRAFT

assigned to training. The results of this approach is that for the most part simulator examinations are conducted by instructors that have all the qualifications and knowledge that would be required of a check operator. Further, the SRO's that conduct examinations are independent of the SRO's that do the training to insure that the program as well as the individual is evaluated.

CONCLUSION

My opinion on this subject is shared by many other utility managers and instructors as well as licensed shift supervisors, shift foremen, and plant operators. NRC administered examinations provide an extreme source of frustration for nuclear managers and operators alike. In a country with the resources that we have, the licensing process should be beyond reproach. Requirements should be well defined, reasonable and appropriate to the job at hand. There should be no mystery or gamesmanship involved and the programs should be administered uniformly by competent personnel across the country.

* The only way I see to achieve effective training is to develop the programs based on SAT/JTA and examine against the published lesson objectives. This method insures that there is no question as to the knowledge and performance requirements for licensed operators.

It seems as though a great deal of time is being spent instituting programs, policies and procedures without too much regard for the detailed effects on the operating end of the industry. I feel that attention to detail should be the first order of business.

* DENOTES KEYPOINTS

NRR STAFF PRESENTATION TO THE ACRS

SUBJECT: CHECK OPERATOR

DATE: FEBRUARY 14, 1986

PRESENTER: BRUCE A BOGER

PRESENTER'S TITLE/BRANCH/DIV: CHIEF
OPERATOR LICENSING BRANCH
DIVISION OF HUMAN FACTORS TECHNOLOGY, NRR

PRESENTER'S NRC TEL. NO.: 492-4868

SUBCOMMITTEE:

CHECK OPERATOR

- CHECK OPERATOR CONCEPT
- CHANGES AFFECTING REQUALIFICATION

NRR/DHFT
492-4868
2/14/86

CHECK OPERATOR CONCEPT

- SECY 84-167

- SCOPE

  - REQUALIFICATION OPERATING EVALUATIONS

  - SELECTION

  - TRAINING

  - AUDIT

- ISSUES

  - INDUSTRY SUPPORT

  - CONFLICT OF INTEREST

  - LEGISLATIVE AUTHORITY

NRR/DHFT
492-4868
2/14/86

CHANGES AFFECTING REQUALIFICATION

PART 55 CHANGES

- BIENNIAL WRITTEN EVALUATION
- ANNUAL OPERATING EVALUATION
- SIX YEAR LICENSE
- USE OF FACILITY LEARNING OBJECTIVES

EXAMINATION DEVELOPMENT EFFORTS

- RELATIONSHIP TO JOB
- KNOWLEDGE AND ABILITIES CATALOGS
- EXAMINER HANDBOOK

NRR/DHFT
492-4868
2/14/86

THE NRC

INSIDER SAFEGUARDS

RULES

INSIDER SAFEGUARDS RULES

- Comprised of:
  - Search Requirements
  - Miscellaneous Amendments
  - Access Authorization Program

- Purpose: To Provide Increased Assurance Against the Insider Threat at Power Reactors

SEARCH REQUIREMENTS (PROPOSED)

- 100% Equipment Search, Except On-Duty Law Officers
- Pat Down for Cause or Equipment Failure

MISCELLANEOUS AMENDMENTS (PROPOSED)

- Vital Island Concept
- Revisions to Vital Area Access Controls
- Revisions to Key and Lock Controls
- Authority to Suspend Certain Safeguards During Emergencies

ACCESS AUTHORIZATION PROGRAM

- Background Investigation
- Psychological Assessment
- Behavioral Observation

CURRENT INDUSTRY PRACTICE

(26 FACILITIES)

- MOST HAVE SCREENING, PSYCHOLOGICAL ASSESSMENT AND BEHAVIORAL OBSERVATION
  - SOME PLANS DESCRIBE PROGRAMS
  - SOME MAKE ONLY GENERAL COMMITMENT TO ANSI 18.17 OR ANS 3.3
- A FEW COMMIT TO TWO OF THREE COMPONENTS
- ONE LICENSEE HAS NO PROGRAM
- NO STANDARDIZATION

PUBLIC COMMENT

- o 210 Day Public Comment Period, 14 Commenters
- o Majority of Revisions Clarifying
- o Access Authorization Program
  - — 3 Component Program Currently Used to Varying Degrees by Industry
  - — NUMARC Proposal, Inspection/ Enforcement Unresolved
- o Search Requirements
  - — Limited Comment
  - — Questioned Search of Trusted Long Term Employees
- o Miscellaneous Amendments — Vital Island Concept

ACCESS AUTHORIZATION RULE – COMMENT ISSUES

- "Grandfathering"
- Psychological Assessment
  - One vs. Two Tests, Clinical Interview
- Interim Clearance
- Appeal Procedures
- Industry Self Regulation – the NIIMARC Initiative

MAJOR ISSUES: GUIDELINES VS. RULE		
ISSUES	GUIDELINES	RULE
APPEAL PROCEDURES	NO	YES
"GRANDFATHERING"	INDIVIDUALS GRANTED UNESCORTED ACCESS AUTHORIZATION ON OR BEFORE THE EFFECTIVE DATE OF GUIDELINES	INDIVIDUALS WHO HAVE BEEN SCREENED UNDER A PUBLISHED INDUSTRY STANDARD COMMITTED TO IN AN NRC-LICENSED SECURITY PLAN
TEMPORARY/INTERIM CLEARANCES FOR PA/VA ACCESS	PSYCH. ASSESS. + CREDIT CHECK + ONE DEV. REFERENCE (180 DAYS)	FULL SCREENING PENDING RECEIPT OF CRIMINAL/ MILITARY HISTORY (180 DAYS)
RECIPROCITY	APPLIES TO ALL GRANDFATHERED OR SCREENED INDIVIDUALS— NOT TO INDIVIDUALS SCREENED UNDER TEMPORARY SCREENING PROGRAM	APPLIES TO ALL INDIVIDUALS GRANDFATHERED OR SCREENED UNDER RULE
INSPECTION/ ENFORCEMENT	?	NRC REGIONAL INSPECTION/ ENFORCEMENT

BASIS FOR RULE RECOMMENDATION

- o Considers Union Views (12/1/83 Commission Meeting)
- o Provides Consistency with Other Required Safeguards Programs
- o Provides Consistency with Commission Response to Congressional Inquiries
- o Provides Standardized/Transferrable Program for Reciprocity
- o Provides Oversight with Prompt, Effective, Remedial Action on Deficiencies
- o Establishes Appeal Procedures for Denied/Revoked Clearance

N U M A R C

NUCLEAR UTILITY MANAGEMENT

& RESOURCES COMMITTEE

AGENDA

- FORMATION OF NUMARC
- FOUNDING PRINCIPLES
- ORGANIZATION AND FUNCTIONING
- INITIATIVES AND ACCOMPLISHMENTS
- TECHNICAL SUBCOMMITTEE
- CONGRESSIONAL EDUCATION SUBCOMMITTEE
- ATTRIBUTES
- RESULTS ACHIEVED

BACKGROUND

- EARLY 1983 - HUMAN FACTORS PROGRAM PLAN
- SUMMER 1983 - GENERAL OPERATING CRITERIA
- FALL 1983 - PROPOSED REGULATIONS ON TRAINING & QUALIFICATION
- JANUARY 1984 - POLICY AND PLANNING GUIDANCE

NUMARC FORMATION

- REGULATORY TREND - IMPACT
- FEBRUARY 1984 - NTOL EXPERIENCE
- MARCH 1984 - NUMARC FORMATION

NUMARC PRINCIPLES

- INDUSTRY MUST PURSUE EXCELLENCE
- INDUSTRY MUST HAVE FLEXIBILITY
- INDUSTRY IS BEST QUALIFIED TO IDENTIFY PROBLEMS, DETERMINE SOLUTIONS, AND TAKE ACTION

NUMARC ORGANIZATION

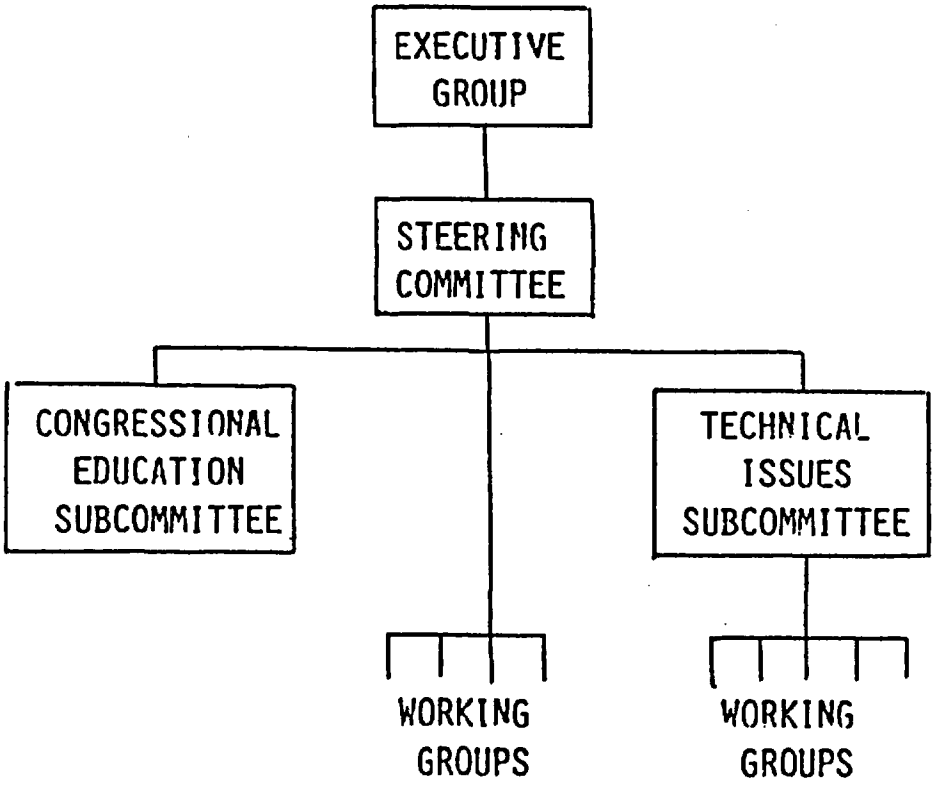

INITIATIVES AND ACCOMPLISHMENTS

- MEETINGS WITH NRC COMMISSIONERS
- TRAINING PROGRAMS READY FOR ACCREDITATION - END OF 1986
- INPO CORPORATE ASSISTANCE VISITS CONVERTED TO EVALUATIONS
- INPO EVALUATIONS STRENGTHENED BY SENIOR MANAGER AND SRO PARTICIPATION
- UPGRADE DIAGNOSTIC ABILITIES OF SHIFT OPERATING PERSONNEL
- INCREASE MANAGEMENT'S NUCLEAR EXPERTISE
- INCREASE POOL OF QUALIFIED NUCLEAR PERSONNEL
- INCREASE MANAGEMENT EFFECTIVENESS
- DEVELOP FITNESS-FOR-DUTY PROGRAMS
- CONFIRM INDUSTRY COMMITMENT TO REDUCING UNPLANNED AUTOMATIC REACTOR TRIPS

TECHNICAL ISSUES

- AUGUST 1985 - SUBCOMMITTEE FORMED
- INITIAL ISSUES
  - STATION BLACKOUT
  - DECAY HEAT REMOVAL
  - SAFETY GOALS

CONGRESSIONAL EDUCATION PROGRAM OBJECTIVES

- FOSTER IMPROVED CONGRESSIONAL CONFIDENCE IN NUCLEAR POWER
- DEVELOP SUPPORT FOR SELF-MANAGEMENT
- DEVELOP SUPPORT FOR SELF-INITIATED IMPROVEMENTS

NUMARC ATTRIBUTES

- STRONG SENIOR UTILITY MANAGER INVOLVEMENT
- ABILITY TO ACHIEVE UTILITY COMMITMENT
- DIALOGUE WITH COMMISSIONERS AND SENIOR NRC PERSONNEL

RESULTS ACHIEVED
IMPROVED PLANT PERFORMANCE

1980 - 1984 COMPARISONS:

- UNPLANNED AUTOMATIC SCRAMS WHILE SYNCHRONIZED - 42%
- RADIATION EXPOSURE
  - BWR - 18%
  - PWR - 7%
- SOLID RADIOACTIVE WASTE SHIPPED
  - BWR - 22%
  - PWR - 30%
- LOST TIME ACCIDENT RATE - 67%
- SIGNIFICANT EVENTS - 57%

NUMARC RESULTS

- GREATER UTILITY AWARENESS OF MANAGEMENT ISSUES AND IMPACT OF NRC ACTION ON OPERATIONS
- COMMUNICATION LINES ESTABLISHED AMONG UTILITY MANAGERS AND WITH NRC
- UTILITY MANAGERS DEALING WITH KEY ISSUES RELATING TO SAFETY AND RELIABILITY

NUMARC ACRS PRESENTATION

ACCESS AUTHORIZATION

FEBRUARY 14, 1986

GUIDELINE APPROVAL STATUS

- NUMARC UTILITIES
- AIF
- EEI
- KMC PHYSICAL SECURITY COORDINATING GROUP
- NRC

AGENDA

- BACKGROUND
- GUIDELINE ELEMENTS
- ISSUES
  - COMPLIANCE
  - APPEAL
- SUMMARY

BACKGROUND

- WORKING GROUP - ACCESS AUTHORIZATION - 1/85
- COMMENT PERIOD ENDED - 3/85
- WORKING GROUP - SECURITY - 4/85
- NUMARC - NRC MEETINGS
- NUMARC APPROVAL - 8/85
- SECY 85-381 - 11/85

MAJOR ELEMENTS

- BACKGROUND INVESTIGATION
- PSYCHOLOGICAL EVALUATION
- CONTINUAL BEHAVIOR OBSERVATION

SIGNIFICANT DIFFERENCES

GUIDELINE VS. RULE

- BACKGROUND INVESTIGATION
- PSYCHOLOGICAL EVALUATION
- CONTINUAL BEHAVIOR OBSERVATION

SIGNIFICANT DIFFERENCES
GUIDELINE VS. RULE - CONT.

- TYPES OF CLEARANCES
- TRANSFER OF CLEARANCES
- REINSTATEMENT OF CLEARANCES
- GRANDFATHERING
- AUDITS AND EVALUATIONS
- PRESCRIPTIVE DETAILS
- APPEAL PROCESS

ASSURANCE OF COMPLIANCE

- INDEPENDENT AUDITS OF UTILITY PROGRAMS
- AUDITS OF CONTRACTOR PROGRAMS
- COMMITMENT TO AMEND SECURITY PLAN

APPEAL ISSUE

- LICENSEE MUST HAVE FULL AUTHORITY TO DECIDE WHO WORKS AT NUCLEAR PLANT WITHIN CONSTRAINTS OF ANTI-DISCRIMINATION LAWS
- NO RIGHT TO EMPLOYMENT
- SUFFICIENT EXISTING MEANS TO SEEK REDRESS FOR CLAIMED WRONGS

WHY GUIDELINE

- NECESSARY PROGRAM ELEMENTS
- STRONG INDUSTRY SUPPORT
- BETTER IMPLEMENTATION PROVISIONS
  - EMPLOYMENT HISTORY
  - EMPLOYEE ASSISTANCE PROGRAMS
  - TEMPORARY CLEARANCES
  - TRANSFER
  - REINSTATEMENT
  - GRANDFATHERING
  - AUDIT SHARING
  - SELF MONITORING
- FLEXIBILITY - LESS PRESCRIPTIVE
- PROVEN
- ENFORCEABLE
- DEVELOPED WITH AND ACCEPTABLE TO NRC

TRIAL PROGRAM

SAFETY SYSTEMS OUTAGE

MODIFICATION INSPECTIONS

REPORT TO ACRS

FEBRUARY 14, 1986

SAFETY SYSTEMS

OUTAGE MODIFICATION INSPECTION PROGRAM

PURPOSE

VERIFY THROUGH REVIEW OF SELECTED ACTIVITIES, THAT:

- THE LICENSEE HAS EFFECTIVE CONTROLS FOR CONDUCTING MODIFICATION ACTIVITIES DURING OUTAGES
- COMPLETED MODIFICATIONS HAVE BEEN ADEQUATELY DESIGNED, INSTALLED, INSPECTED AND TESTED, AND
- AFFECTED SYSTEMS ARE READY FOR SAFE STARTUP AND OPERATION OF THE PLANT FOLLOWING THE OUTAGE.

SAFETY SYSTEMS

OUTAGE MODIFICATION INSPECTION PROGRAM

NEED FOR PROGRAM BASED ON FOLLOWING FACTORS:

- SERIES OF SAFETY PROBLEMS AT OPERATING PLANTS RESULTING FROM INADEQUATE DESIGN, PROCUREMENT, INSTALLATION OR TESTING OF MODIFICATIONS DURING OUTAGES,
- ROUTINE INSPECTION PROGRAM NOT FINDING ROOT CAUSES,

SAFETY SYSTEMS

OUTAGE MODIFICATIONS INSPECTION PROGRAM

DEVELOPMENT OF THE INSPECTION PROGRAM:

- REVIEW OF EXISTING INSPECTION PROGRAMS.
- VISITS TO OPERATING SITES TO STUDY APPROACHES TO OUTAGE MODIFICATIONS.
- REVIEW OF UPCOMING OUTAGES.
- SELECTION OF FORT CALHOUN AND DRESDEN UNIT 3 FOR TRIAL PROGRAM.
- PERFORMANCE OF TRIAL PROGRAM AT FORT CALHOUN AND DRESDEN UNIT 3.

SAFETY SYSTEMS

OUTAGE MODIFICATIONS INSPECTION PROGRAM

INSPECTION ACTIVITIES

- PRE-OUTAGE REVIEW
- DESIGN INSPECTION
- VENDOR INSPECTION
- INSTALLATION INSPECTION
- PRE-OPERATIONS INSPECTION

OUTAGE DESIGN INSPECTION

- BASED ON SELECTED WORK PACKAGES
- DETERMINE INITIAL DESIGN BASES
- REVIEW DESIGN CHANGE CONTROLS
- EVALUATE PLANNED MODIFICATIONS
- CONDUCT NEAR BEGINNING OF OUTAGE

OUTAGE VENDOR INSPECTION

- BASED ON SELECTED WORK PACKAGES
- CONTRACTOR SELECTION AND QUALIFICATION
- ENVIRONMENTAL QUALIFICATION OF EQUIPMENT
- PREVIOUSLY IDENTIFIED PROBLEMS
- CONDUCT NEAR BEGINNING OF OUTAGE

OUTAGE INSTALLATION INSPECTION

- BASED ON SELECTED WORK PACKAGES
- MATERIAL PROCUREMENT, RECEIPT AND CONTROL
- PERSONNEL QUALIFICATION AND TRAINING
- CONTROL OF WORK ACTIVITIES
- VERIFICATION OF INSTALLATION
- CONDUCT AFTER SIGNIFICANT WORK

OUTAGE PRE-OPERATIONS INSPECTION

- BASED ON RESULTS OF PREVIOUS INSPECTIONS
- TEST PROGRAM CONTROLS
- TURNOVER PACKAGE CLOSEOUTS
- VERIFICATION WALKDOWNS
- OBSERVATION OF IN-PROCESS TESTING
- CONDUCT PRIOR TO STARTUP

SAFETY SYSTEMS

OUTAGE MODIFICATION INSPECTION PROGRAM

PLANNED FUTURE ACTIVITIES INCLUDE:

- ISSUE FORT CALHOUN FINAL REPORT - FEBRUARY.
- ISSUE DRESDEN 3 DESIGN/PROCUREMENT INSPECTION FINDINGS - FEBRUARY.
- PERFORM DRESDEN 3 INSTALLATION AND TESTING INSPECTIONS - APRIL TO JUNE.
- ISSUE FINAL DRESDEN 3 REPORT - JULY.
- ISSUE INSPECTION PROCEDURES.

SAFETY SYSTEM OUTAGE MODIFICATION DESIGN INSPECTION

- INSPECTION OF ENGINEERING AND DESIGN DETAILS OF SELECTED SET OF MODIFICATIONS TO BE ACCOMPLISHED DURING OUTAGE.
- 2/3 WEEKS OF DIRECT INSPECTION OF RESPONSIBLE DESIGN ORGANIZATIONS.
- PERFORMED BY TEAM OF NRC INSPECTORS WITH CONTRACTOR ASSISTANCE (6 TO 8 PEOPLE ON TEAM)
- INSPECTIONS ADDRESS FOUR DISCIPLINES
  - MECHANICAL SYSTEMS
  - MECHANICAL COMPONENTS
  - ELECTRICAL POWER
  - INSTRUMENTATION AND CONTROLS
- INSPECTION EMPHASIS
  1. VERIFY THAT REGULATORY REQUIREMENTS AND DESIGN BASES AS SPECIFIED IN THE FSAR, CORRESPONDENCE TO THE NRC, AND DOCUMENTED IN NRC SAFETY EVALUATIONS, AORE CORRECTLY IMPLEMENTED IN SPECIFICATIONS, DRAWINGS, CALCULATIONS, AND PROCEDURES.
  2. VERIFY THAT THE CORRECT DESIGN INFORMATION HAS BEEN PROVIDED TO THE RESPONSIBLE DESIGN ORGANIZATIONS.
  3. VERIFY THAT DESIGN ENGINEERS HAVE SUFFICIENT TECHNICAL GUIDANCE AND EXPERIENCE TO PERFORM ASSIGNED ENGINEERING FUNCTIONS.
  4. VERIFY THAT DESIGN CONTROLS, AS APPLIED TO THE ORIGNIAL DESIGN, HAVE ALSO APPLIED TO DESIGN CHANGES, INCLUDING FIELD CHANGES.

FORT CALHOUN DESIGN INSPECTION

- CONDUCTED SEPTEMBER - OCTOBER 1985
- INSPECTION REPORT 50-285/85-22
- DESIGN INPUTS (REQUIREMENTS, CRITERIA AND BASES) WERE NOT CLEARLY SPECIFIED AND DOCUMENTED.
  - SYSTEM DESCRIPTIONS WERE USED FOR DESIGN INPUTS, BUT WERE FOUND TO BE INACCURATE AND NOT CONTROLLED.
  - A DETAILED LOAD LISTING WAS NOT PERFORMED AND AN UNCHECKED CALCULATION WAS USED FOR THE BATTERY MODIFICATION.
- NUMEROUS ERRORS WERE FOUND IN ENGINEERING INPUTS, JUDGEMENTS AND CALCULATIONS:
  - AN INCORRECT AIR VOLUME WAS USED IN THE AIR ACCUMULATOR MODIFICATION.
  - SEISMIC ANALYSIS WAS INCORRECT FOR THE AFW STEAM ADMIT VALVES.
- ORIGINAL DESIGN BASES (DESIGN ASSUMPTIONS AND CALCULATIONS, AND INSTALLATION SPECIFICATIONS) WERE NOT CONSULTED, REVIEWED OR MAINTAINED.
  - INSTALLATION PROCEDURES FOR AIR TUBING DID NOT REFERENCE OR INCORPORATE GENERIC SEISMIC INSTALLATION CRITERIA.
  - PIPING REANALYSIS TEMPERATURES WERE NOT OBTAINED FROM ORIGINAL DESIGN BASES AND WERE NOT BEING HANDLED IN A CONTROLLED MANNER.
  - GALVANIZED STEEL WAS NOT USED IN CONTAINMENT HVAC DUCT SUPPORTS AS SPECIFIED IN ORIGINAL EQUIPMENT SPECS.
- TWO CASES WHERE FUNCTIONAL TESTING OF MODIFICATIONS WAS NOT CONSIDERED.
  - AIR ACCUMULATORS FOR AFW SYSTEM STEAM SUPPLY VALVES WOULD NOT HAVE BEEN TESTED FOR ABILITY TO CLOSE THE VALVES.
  - SIMILAR ACCUMULATORS INSTALLED IN A PREVIOUS OUTAGE WERE NOT FUNCTIONALLY TESTED.
- SAFETY EVALUATIONS WERE EXTREMELY BRIEF, WITH MINIMAL ANALYSIS.
  - GENERAL CONCLUSION BASED ON REVIEW OF NUMEROUS OUTAGE SAFETY EVALUATIONS.
- SAFETY EVALUATIONS WERE NOT DONE FOR CHANGES TO SOME NON-SAFETY SYSTEMS DISCUSSED IN THE UPDATED SAR.
  - CHANGING SECONDARY CHEMISTRY CONTROL SYSTEM FROM PHOSPHATE ADDITION TO BORIC ACID ADDITION.
  - ADDITION OF POWER SYSTEM STABILIZER.
  - REPLACEMENT OF FEEDWATER REGULATORY SYSTEM INSTRUMENTATION.
  - CHANGES TO THE REACTOR REGULATING SYSTEM.

DRESDEN 3 DESIGN INSPECTION

- CONDUCTED DECEMBER 1985 - JANUARY 1986

DESIGN WEAKNESSES IDENTIFIED:

- REACTOR PROTECTION SYSTEM ANALOG TRANSMITTER MODIFICATION INTRODUCED SEPARATION VIOLATIONS, ADDITIONAL SYSTEM INTERDEPENDENCIES WHICH WERE NOT ANALYZED.

- DESIGN BASIS OF THE SETPOINTS USED FOR THE FACILITY WERE NOT AVAILABLE.

- A 250 VOLT BATTERY SIZING CALCULATION IGNORED MOTOR STARTING CURRENTS; A 125 VOLT BATTERY CALCULATION INCORRECTLY APPLIED INDUSTRY STANDARDS RESULTING IN A CONTINUED NEED FOR LOAD SHEDDING.

- EQUIPMENT QUALIFICATION IN CERTAIN ROOMS WAS FOREGONE BASED UPON INSTALLATION OF A NON-SAFETY-RELATED "LEAK BEFORE BREAK DETECTION SYSTEM. THIS WAS NOT APPROVED BY THE NRC.

A. SELECTION OF VENDORS - SAFETY SIGNIFICANCE OF COMPONENT

B. GENERAL VENDOR INSPECTION METHODOLOGY

INSPECTIONS OF VENDORS ARE TAILORED TO THE SERVICE/COMPONENT SUPPLIED TO THE LICENSEE

1. REVIEW OF LICENSEE'S PROCUREMENT SPECIFICATIONS

   -DESIGN BASIS/CALCULATIONS, MATERIALS, TESTING, EQ
   -QUALITY ASSURANCE CRITERIA, 10 CFR 21

2. REVIEW VENDOR

   -DESIGN/FABRICATION ACTIVITIES, INCLUDING WORK IN PROGRESS
   -TESTING, QUALIFICATION OF PERSONNEL PERFORMING TESTS (NDE, ETC.)
   -MATERIAL/EQUIPMENT STORAGE-SEGREGATION
   -PROCEDURAL CONTROLS
   -IMPLEMENTATION OF QA PROGRAM

3. REVIEW PROCUREMENT DOCUMENTATION FOR SUB-VENDORS

FORT CALHOUN

6 VENDORS WERE IDENTIFIED

	VENDOR	COMPONENT	FINDINGS/COMMENTS
1.	NES	STEAM GENERATOR NOZZLE DAMS	•DESIGN CALCULATIONS INADEQUATE, SEISMIC LOADS OMITTED, ALLOWABLE LOADS VICE MAXIMUM LOADS CALCULATED FOR BOLTS USED TO HOLD THE DAM IN PLACE.
			•10 CFR 21 NOT SPECIFIED IN PO
2.	WESTINGHOUSE	4160/480 TRANSFORMERS	•COMMERCIAL GRADE ITEMS DEDICATED FOR USE BY WESTINGHOUSE
			•MINOR DOCUMENTATION DEFICIENCIES
3.	DIETRICH STANDARD	FLOW ELEMENT FOR COMPONENT COOLING WATER SYSTEM	•DESIGN CALCULATIONS DID NOT INCLUDE SEISMIC ANALYSIS AS REQUIRED BY PO
4.	ELGAR	6 INVERTERS (4) 7.5 KVA (2) 10 KVA	•MINOR DOCUMENTATION DEFICIENCIES
5.	DRESSER	VALVES AND SPARE PARTS FOR VALVES	•INADEQUATE REVIEWS RESULTING IN FAILURE TO MAKE 10 CFR 21 REPORTS
			•DOCUMENTATION DEFICIENCIES
6.	*POWER CONVERSION PRODUCTS	BATTERY CHARGERS	•NONE

*AN INSPECTION WAS NOT PERFORMED SPECIFICALLY FOR FORT CALHOUN BASED UPON A PREVIOUS INSPECTION

DRESDEN

A. AREAS REVIEWED DURING CORPORATE AND SITE INSPECTIONS

1. LICENSEE - VENDOR INFORMATION INTERFACE

*LICENSEE PROCEDURES
*GE SIL/SAL
*DIESEL (WESTERN) MAINTENANCE INSTRUCTIONS
*MAGNABLAST CIRCUIT BREAKERS
*RCIC ISOLATION RELAYS

2. PROCUREMENT OF SAFETY-RELATED COMPONENTS

*REVIEW PROCUREMENT DOCUMENTS ASSOCIATED WITH OUTAGE AND RECENT PROCUREMENTS - HPCI, IRM, SCRAM PILOT VALVES, ETC.
*FOREIGN SUPPLIERS -
CANADA WORCESTER CONTROLS, WEIR PUMP UK, IHI (JAPAN)

3. 10 CFR 21

*PROGRAM/PROCEDURES

B. PERFORM INSPECTION OF SELECTED VENDORS

FORT CALHOUN INSTALLATION AND TEST INSPECTION

INSPECTION OBJECTIVE: Assess the installation and testing of selected modifications accomplished during the outage

AREAS

- Effectiveness of controls for conducting modification work activities during outages,
- Accomplishment of modification work activities in accordance with the established procedures and commitments,
- Proper inspection and testing of completed modifications, and
- Readiness of the affected systems for safe startup and operation of the plant following the outage.

FORT CALHOUN INSTALLATION AND TEST INSPECTION

INSPECTION SCOPE:

AREAS

- Design Change Control
- Document Control
- Installation Procedure Controls and Compliance
- Mechanical/Electrical Installation and Construction Control
- Welding and NDE Control
- Maintenance Control
- Operations and Test Control
- Material Control During Storage and Pre-Installation
- Corrective Actions
- QA Audits
- Qualification and Training

FORT CALHOUN INSTALLATION AND TEST INSPECTION

SAFETY EVALUATIONS WERE NOT ACCOMPLISHED

- Installation of lead shielding
- Electrical jumpers installed for long periods of time

MATERIAL CONTROL DURING STORAGE DID NOT MEET REQUIREMENTS

- Level B safety-related material stored in a Level C storage area
- Safety-related material improperly tagged or damaged while in storage
- Non safety-related material stored in safety-related areas

WELDING AND NONDESTRUCTIVE EXAMINATION DID NOT MEET REQUIREMENTS

- Weld fitup for ASME code welds not verified or documented
- Weld procedures referenced on weld records did not match the actual welding
- Dye penetrant inspections violated site procedures and were not properly evaluated

MAINTENANCE AND TESTING ACTIVITIES WERE NOT ADEQUATELY CONTROLLED

- Eight of thirteen modification installations checked had installation problems.
- Procedures lacked detail to adequately control work.
- Inadequate construction package drawing control.
- Inadequate functional tests of modifications.