AECL EACL

Safety Design Guide

CONTAINMENT

ACR

108-03650-SDG-006

Revision 3

Prepared by
Rédigé par

Nam Seung Deog

Reviewed by
Vérifié par

Johal Hardev S.

Approved by
Approuvé par

Jaitly Raj | Bonechi Massimo

2004/03/17
Controlled

2004/03/17
Contrôlé

©Atomic Energy of Canada Limited

©Énergie Atomique du Canada Limitée

2251 Speakman Drive
Mississauga, Ontario
Canada L5K 1B2

2251 rue Speakman
Mississauga (Ontario)
Canada L5K 1B2

AECL EACL

Safety Design Guide

Containment

ACR

108-03650-SDG-006
Revision 3

2004 March

CONTROLLED

This document and the information contained in it has been made available for use within your organization and only for specified purposes. No part of this document nor any information contained in it may be transmitted in any form to any third parties except with the prior written consent of Atomic Energy of Canada Limited.

© Atomic Energy of Canada Limited

2251 Speakman Drive
Mississauga, Ontario
Canada L5K 1B2

Mars 2004

CONTRÔLÉ

Le présent document et les renseignements qu'il contient ont été mis à la disposition de votre organisation aux fins précisées seulement. Aucune partie du présent document ni aucun renseignement qu'il contient ne doivent être donnés ou communiqués à des tiers, sous quelque forme que ce soit, sans l'autorisation préalable écrite d'Énergie atomique du Canada limitée.

© Énergie atomique du Canada limitée

2251, rue Speakman
Mississauga (Ontario)
Canada L5K 1B2

AECL EACL

Release and Revision History / Liste des documents et des révisions

0939B Rev. 13

Document Details / Détails sur le document

Title / Titre	Total no. of pages / N^bre total de pages
Containment	44

CONTROLLED - CONTRÔLÉ

Release and Revision History / Liste des documents et des révisions

Release Document No./N°	Release Document Date	Revision Révision No./N°	Revision Révision Date	Purpose of Release; Details of Rev./Amendement Objet du document; détails des rév. ou des modif.	Prepared by Rédigé par	Reviewed by Examiné par	Approved by Approuvé par
1	00-06-27	D1	00-06-27	Converted from CANDU 9 document	A.H. Stretch		
2	00-10-24	D2	00-10-16	Review and Comment	A.L. Wight	D.H. Wren	
3		0	00-11-16	Issued as "Approved for Use"	A.L. Wight	D.H. Wren	J.M. Hopwood
4		1D1	02-06-03	Issued for Review and Comment.	C. Xu	A. H. Stretch	
5		1D2	02-09-12	Issued for Review and Comments. Revised to include the current ACR Safety, Licensing and Design philosophy. Removal of Groups 1 and 2 and revised separation requirements. Included revised containment penetration isolation configuration figures. Updated to include the ACR systems' design changes.	W. Rabbani	S. D. Nam A. Stretch V. Snell K. Hau E. Choy A. Josefowicz J. Millard M. Elgohary R. Ghai/O. Hines H. Johal	

DCS/RMS Input / Données SCD ou SGD

Rel. Proj. / Proj. conn.	Project / Projet	SI	Section	Serial / Série	Sheet / Feuille No. / N°	Of / De	Unit No.(s) / Tranche n°
	108	03650	SDG	006	1	3	

AECL EACL

Release and Revision History / Liste des documents et des révisions

0939B Rev. 13

Document Details / Détails sur le document

Title / Titre	Total no. of pages / N^bre total de pages
Containment	43

CONTROLLED - CONTRÔLÉ

Release and Revision History / Liste des documents et des révisions

Release Document No./N°	Release Document Date	Revision Révision No./N°	Revision Révision Date	Purpose of Release; Details of Rev./Amendement Objet du document; détails des rév. ou des modif.	Prepared by Rédigé par	Reviewed by Examiné par	Approved by Approuvé par
6		1	02-10-15	Issued as "Approved for Use".	W. Rabbani	S. D. Nam A. Stretch V. Snell K. Hau E. Choy A. Josefowicz J. Millard M. Elgohary R. Ghai/O. Hines H. Johal	M. Bonechi
7		2	03-01-06	Issued as "Approved for Use". Document was revised as per resolution of comments from the Technical Review. Additions were made to wording of various sections which were mostly of a clarification nature.	W. Rabbani	J. Tong J. Waddington V. Langman N. Barkman P. Lee H. Johal	M. Bonechi

DCS/RMS Input / Données SCD ou SGD

Rel. Proj. / Proj. conn.	Project / Projet	SI	Section	Serial / Série	Sheet / Feuille No. / N°	Of / De	Unit No.(s) / Tranche n°
	108	03650	SDG	006	2	3	

AECL EACL

Release and Revision History / Liste des documents et des révisions

0939B Rev. 13

Document Details / Détails sur le document

Title / Titre	Total no. of pages / N^bre total de pages
Containment	43

CONTROLLED - CONTRÔLÉ

Release and Revision History / Liste des documents et des révisions

Release Document No./N°	Release Document Date	Revision Révision No./N°	Revision Révision Date	Purpose of Release; Details of Rev./Amendement Objet du document; détails des rév. ou des modif.	Prepared by Rédigé par	Reviewed by Examiné par	Approved by Approuvé par
8		3	04-03-17	Issued as "Approved for Use". Changes are due to impact of safety basis for ACR. Text additions are identified by <u>underlining</u> and are noted in this revision history. Revisions consist of the following: • Section 3.5: removed the last sentence in the paragraph because it is not related to design • Sections 3.6, 3.12, 4.2 a) & d), 4.2.1, 4.2.2, 4.2.3 a) & c), 4.2.4 a), 4.2.5 c), 4.2.6 d), 4.4 a), 4.6.1 a) & b) contain text changes • Parts 4.2.3 e), 4.4 d), 4.5 b), 4.6 b), 4.6.1 c), 5 o) & u) deleted as main requirements have been expanded in Section 3.12 • Acronym table: updated more specific to ACR	S.D. Nam	H. Johal	R. Jaitly M. Bonechi

DCS/RMS Input / Données SCD ou SGD

Rel. Proj. / Proj. conn.	Project / Projet	SI	Section	Serial / Série	Sheet / Feuille No. / N°	Of / De	Unit No.(s) / Tranche n°
	108	03650	SDG	006	3	3	

PREFACE

Defence-in-depth is one of the fundamental safety principles of nuclear reactor design. The containment system is one of the barriers to the release of radioactive materials which provides defence in depth in an accident. The requirements for containment impact on the design of many structures, systems and components in the plant. As such, containment requirements must be considered by a wide variety of design disciplines, such as layout, building structure, I&C, ventilation, shielding, radiation protection, process system design, safety analysis, and many others. The containment interfaces with a large number of other systems, especially those that must penetrate the containment boundary.

This Safety Design Guide collects the requirements for containment for the use of both designers of containment systems, and designers of systems that interface with containment or which impact on the containment function. It is intended to facilitate an integrated approach to the safety design of the plant.

Requirements for containment are derived from the Canadian Regulator's document, the CNSC Regulatory Policy Statement for the design of containment, R-7 (Reference. [1]). International requirements as outlined in the IAEA Safety Standard and Safety Guides for Design (Reference [13] and [14]) should also be addressed.

TABLE OF CONTENTS

SECTION		PAGE
1.	PURPOSE	1-1
2.	COMPLIANCE	2-1
3.	CONTAINMENT SAFETY PHILOSOPHY	3-1
3.1	General	3-1
3.2	Essential Safety Functions	3-1
3.3	Containment	3-2
3.4	Containment Envelope	3-2
3.5	Dose Limits under Accident Conditions	3-3
3.6	Requirements for Penetrations of the Containment Structure	3-4
3.7	Containment Extensions	3-4
3.8	Containment Isolation	3-5
3.9	Containment Atmosphere Control	3-6
3.10	Shielding Requirements	3-6
3.11	Seismic Qualification	3-6
3.12	Severe Core Damage Accidents	3-6
3.13	Containment Codes and Standards	3-7
4.	CONTAINMENT SYSTEMS REQUIREMENTS	4-1
4.1	Basic Requirements	4-1
4.1.1	General	4-1
4.2	Design Requirements	4-1
4.2.1	Containment Envelope	4-1
4.2.2	Minimum Allowable Performance Standards (MAPS)	4-2
4.2.3	Strength of the Containment Structure	4-2
4.2.4	Containment Leakage	4-3
4.2.5	Environmental Requirements	4-3
4.2.6	Availability Requirements	4-3
4.2.7	Separation and Independence Requirements	4-5
4.2.8	Shielding Requirements	4-5
4.3	Testing Requirements	4-5
4.3.1	Commissioning Containment Pressure Tests	4-6
4.3.2	Testing of Containment Equipment	4-6
4.3.3	Containment Inspections	4-6
4.4	Containment Air Locks	4-7
4.5	Internal Structures of the Containment	4-7
4.5.1	Coverings and Coatings	4-7
4.6	Removal of Heat from the Containment	4-7
4.6.1	Control and Cleanup of the Containment Atmosphere	4-8

TABLE OF CONTENTS

SECTION **PAGE**

4.7 Status Monitoring Requirements 4-8
4.7.1 Inadvertent Operation 4-8
4.7.2 Post Accident Operator Action 4-8

5. CONTAINMENT EXTENSIONS REQUIREMENTS 5-1

6. DOCUMENTATION 6-1

7. REFERENCES 7-1

TABLES

Table 3-1 Dose and Release Limits for Postulated Accidents 3-3

Table 3-2 Applicable CSA Standards for Containment Design 3-8

APPENDICES

Appendix A Acceptable Containment Isolation Barriers A-1

Appendix B List of Safety Design Guides B-1

Appendix C Acronyms C-1

1. PURPOSE

This Safety Design Guide identifies the requirements for the systems, structures and components whose function is to mitigate the release of radioactivity to the environment in the event of an accident, including extensions of the containment boundary, and the requirements for isolation of containment during accident conditions. These systems are referred to in this document as "containment systems". The requirements in this document apply to all those reactor systems, and to parts of systems, performing the containment function, and the systems identified in the AECL Systems Index (ASI) as "Containment".

The safety concept, or safety philosophy, for the containment function is described in Section 3 only as guidance and to provide designers with an understanding of the specific design requirements for the containment system presented in Sections 4 and 5.

The containment system is a safety system. The general requirements which apply to all containment systems are stated in Section 4.1. Design requirements are outlined in Section 4.2. These are based primarily on the CNSC Regulatory Policy Statement R-7 (Reference [1]) and CAN/CSA-N285.3 (Reference [2]). The codes and standards applicable to containment systems are discussed in Section 3.13. Design requirements for metallic extensions of the containment boundary, and the isolation requirements of these containment extensions during accident conditions are stated in Section 5. These requirements impact many different fluid and electrical systems that penetrate the containment boundary. They are collected into a separate section for the convenience of designers. International requirements as outlined in the IAEA Safety Standard and Safety Guides for Design (Reference [13] and [14]) should also be addressed.

Documentation requirements for containment systems are stated in Section 6. Detailed requirements for specific systems will be included in the system design requirements documents.

Note that some requirements of this document are not just directed at designers, but also at plant operators. The designers are required to ensure that the requirements directed at plant operators are clearly identified in the design documents.

2. COMPLIANCE

Compliance with Safety Design Guides is mandatory. A listing of Safety Design Guides is included in Appendix B. Deviations from the requirements identified in the guide may be allowed, after they are reviewed and approved by completion of a Safety Design Guide Supplement, AECL form 0729-00.

3. CONTAINMENT SAFETY PHILOSOPHY

3.1 General

This section of the Safety Design Guide describes the safety concept and safety design philosophy used to develop the safety requirements. It is to be considered as information for the interpretation and application of the safety requirements listed in Sections 4 and 5.

3.2 Essential Safety Functions

The safety of the plant is based on the provision of the essential safety functions, as listed in 108-03650-SDG-001, throughout all normal and abnormal operating conditions. These functions are to:

a) shut the reactor down and maintain it in a safe shutdown condition (CONTROL),

b) remove heat from the fuel (COOL),

c) limit the release of radioactive material by maintaining a barrier (CONTAIN), and

d) monitor the condition of the plant and perform actions necessary to maintain the above safety functions (MONITOR).

The safety systems in ACR™* are:

- The two shutdown systems (SDS1, SDS2),
- The Emergency Core Cooling System (ECCS), and
- Containment.

The Containment System performs its function in the event of the release of radioactivity as the result of an accident. It is one of the barriers to the release of radioactivity to the environment and is part of the "defence in depth" approach to nuclear design. The barriers to confine the main sources of radioactivity, the fission products in the fuel, are the fuel matrix, the fuel sheath, the heat transport system pressure boundary, moderator system (calandria), the containment boundary and the Exclusion Area Boundary (EAB).

---

* ACR™ (Advanced CANDU Reactor™) is a trademark of Atomic Energy of Canada Limited (AECL).

3.3 Containment

The design of the plant will include a containment structure. This will enclose the reactor, the Heat Transport System (HTS), and related nuclear systems. The function of the containment is to limit releases of radioactive material to the environment to protect the public from radiation dose to levels acceptable to the Regulator.

The containment for the plant is a containment system which includes:

a) the structure of the containment building and appurtenances; and

b) associated equipment that is required to ensure its function in:

   1) isolating the containment to provide a continuous containment boundary,

   2) reducing the internal pressure or the quantity of free radioactive material, where required to satisfy the dose limits, and

   3) limiting the release of radioactive material from the containment.

The containment for the plant will be designed to limit the release of radioactive materials during any design basis accidents to ensure that public doses resulting from such an event are maintained within acceptable limits as described in CNSC Regulations (Reference [3]) and the Licensing Basis Document (Reference [4]). The reference dose limits for the plant are discussed in Section 3.5.

The containment structure and those active systems required to ensure a continuous containment envelope should not be affected significantly by the accident conditions which they are designed to mitigate, to the extent that they are unable to operate to their minimum performance criteria.

The containment is required to meet its leakage rate criterion under the maximum pressure generated as a result of any design basis accident, which releases radioactivity within the containment volume. The containment structure is required to remain intact (no damage to containment structure) when subjected to the maximum pressure differential generated as a result of any design basis accident.

For ACR, the design basis accident, which is expected to determine the containment design pressure, is a Large Loss-Of-Coolant Accident (LLOCA).

3.4 Containment Envelope

The “containment envelope” or “containment boundary” means the structures and appurtenances which provide a pressure-retaining barrier to prevent or limit the escape of radioactive material that could be released from the fuel elements as a result of an accident. The “containment structure” means the concrete portion and embedded parts of the containment system.

The containment boundary includes the concrete containment structure, and the metallic extensions attached to the concrete structure needed to form a continuous barrier between the containment volume and the outside environment, through which many different fluid and

electrical systems must pass. These metallic extensions may also include various types of non-metallic seals to satisfy the leakage requirements.

3.5 Dose Limits under Accident Conditions

The containment system will be capable of accommodating the release of radioactive materials, resulting from a design basis accident, such that the reference dose limits for a member of the public stated in the Licensing Basis Document (Reference [4]) and reproduced in Table 3-1, are not exceeded. The containment leakage rate and speed of isolation are the primary containment design parameters, which influence the calculated off-site dose.

Table 3-1
Dose and Release Limits for Postulated Accidents

Requirement	Event Class				
	1	**2**	**3**	**4**	**5**
Effective dose (mSv)	0.5	5	30	100	250
Lens of the eye (mSv)	5	50	300	1,000	1,500
Skin (mSv averaged over 1 cm^2)	20	200	1,200	4,000	5,000
30 day emissions of liquid effluent are within the derived annual emission limits for normal operation	T	T	N	N	N
T – the limit shall be met by the worst failure sequence in the event N – not required					

3.6 Requirements for Penetrations of the Containment Structure

Penetrations through the containment envelope will be designed with isolation devices as appropriate, to enable secure closure necessary to meet the minimum performance requirements for the containment. The isolation devices will have redundancy, reliability and performance capabilities that reflect the importance to safety of isolating the penetration. The design of the isolating devices and penetrations will be such that the reference dose limits of Table 3-1 are met for accidents that release radioactive materials into containment; assumption of a limiting single failure is applied to the analysis of the design basis events.

The penetrations, including the isolation devices, will be considered part of the containment envelope. Penetrations and isolating devices that use resilient seals or expansion bellows will be tested to meet performance criteria.

3.7 Containment Extensions

The containment boundary, in addition to the concrete containment structure, also includes the metallic extensions attached to the concrete structure needed to form a continuous barrier between the containment volume and the outside environment, through which many different fluid and electrical systems must pass. These metallic extensions may also include various types of non-metallic seals to satisfy the leakage requirements.

Containment extensions are designed to satisfy the requirements of the CNSC Regulatory Policy Statement, R-7 (Reference [1]) Appendix, and the National Standards of Canada, CAN/CSA N285.0 (Reference [5]) and N285.3 (Reference [2]).

According to N285.0 and N285.3, metal extensions are primarily classified as Class 2 (piping components) or Class 4, and components falling within the scope of ASME Section III are designed to satisfy Class 2 or Class MC. Class 6 is also permitted for closed systems inside the reactor building that penetrate the containment boundary, with additional restrictions on the design pressure, operating pressure and leak monitoring capability.

In the design of extensions, the leak monitoring capability is considered to be any method by which the operator can detect a leak in the pressure boundary of the extension (containment boundary) within a reasonably short time period, so that repairs or additional isolation can be provided to re-establish the integrity of the containment boundary. The measurement method for leakage (e.g., level indication, vapour recovery rate, makeup rate) will depend on the nature of the system being isolated, but should be sufficiently sensitive to minimize the contribution to the unavailability of the containment system.

The extensions are inspected in accordance with the requirements of CAN/CSA N285.5 (Reference [6]). The containment envelope, including the metallic extensions, is seismically qualified to the Design Basis Earthquake (see 108-03650-SDG-002, Reference [7]).

Safety related systems that must satisfy the requirements for metal extensions of the containment envelope are listed in SDG-001, Table 3 (Reference [8]).

3.8 Containment Isolation

The requirements for containment isolation are included in the Appendix of CNSC Regulatory Policy Statement R-7 (Reference [1]) and are summarized below.

Fluid systems penetrating the containment envelope must form a reliable barrier against releases from inside the containment envelope, or must be equipped with suitable isolation devices. These systems consist of two types:

1. **Closed systems**, A "closed system" is defined by CNSC R-7, Clause 1 as:

   "a piping system which penetrates and forms a closed loop or an enclosed volume either inside or outside the containment structure. For closed systems inside containment, the fluid in the system does not directly communicate with either the primary coolant or containment atmosphere".

   For closed systems inside the containment, the fluid in the system does not communicate with the containment atmosphere or heat transport coolant (for example, the service water systems).

   For closed systems outside containment, the fluid does not communicate with the outside atmosphere, but in this case the fluid can communicate with the containment atmosphere (for example, a Reactor Building (RB) pressure measurement instrumentation system).

   Closed systems built to Class 2 or higher requirements and continuously monitored for leaks, require no further isolation. Where leak monitoring is not possible, or if the system is built to Class 3 or 6 with some additional requirements, a single valve must be provided immediately outside the containment structure that can be manually closed in the event of leakage from the boundary.

2. **Open systems**, are systems which penetrate containment and for which the fluid is in direct contact with the containment atmosphere or the heat transport fluid during normal or accident conditions. Open systems require two isolation valves in series, except for small lines of 25 mm diameter and less, connected to the primary heat transport system, or 50 mm diameter and less, connected to the containment atmosphere, which need only one closed valve when connected to a normally closed system outside containment. For lines connected to the heat transport system, one valve should be located inside the containment structure and one outside, and at least one must be either automatically closed or a powered valve operable from the control room. For lines connected to the containment atmosphere, two automatically closing valves are required for normally open lines, both of which may be located outside the containment structure, or two closed valves for normally closed lines.

Closed manual isolation valves must either be locked closed or continuously monitored. Relief valves may be part of a closed system as long as they will automatically reclose after an overpressure condition. The Probabilistic Safety Assessment (PSA) may require additional isolation measures to prevent containment bypass events.

3.9 Containment Atmosphere Control

Systems will be incorporated into the containment design to assist in limiting the release of radioactive materials to the environment following an accident.

Provision will be made for controlling the concentration of hydrogen and/or oxygen following an accident, to prevent detonation or deflagration from degrading the integrity of the containment systems, and also for meeting the reference dose limits of Table 3-1.

Following an accident, it should be possible to isolate all engineered sources of compressed, non-condensable gases and liquefied gases, which could be released to the containment atmosphere other than those required for the operation of necessary equipment. This isolation may be accomplished via automated or manual means. Isolation provisions will be used as input for safety analyses.

3.10 Shielding Requirements

The design of the containment system and associated equipment will incorporate sufficient provision for shielding to ensure that radiation fields would not be excessive in areas of the plant that must remain habitable, or to which access might be required following an accident.

Further information on shielding and radiation protection requirements is given in 108-03650-SDG-007 (Reference [9]).

3.11 Seismic Qualification

All parts of the containment system credited in the safety analysis following a design basis seismic ground motion for the plant site will be designed to remain fully functional following such an event.

The containment structure will be designed to withstand the Design Basis Earthquake (DBE) for the site. Requirements on the seismic qualification of systems are given in Safety Design Guide 108-03650-SDG-002 (Reference [7]).

The containment boundary must be maintained during and after an earthquake, both for the Design Basis Earthquake and for a Site Design Earthquake (SDE) 24 hours after a loss of coolant accident. This requires all penetrations to be seismically qualified to the extent that the containment boundary is not compromised.

3.12 Severe Core Damage Accidents

"Severe Core Damage Accidents" are events having a low frequency of occurrence and potentially high consequences; that is, release of the radioactive materials that may exceed the dose limits for design basis events and limited core damage accidents. They are treated in design by designing the plant to be robust and tolerant and having margins for design basis accidents. Severe core damage accidents are "considered" in the design by assessing the system response to

a spectrum of rare but potentially damaging events, which could in the absence of cooling lead to core disassembly and determine that the risk to the public is acceptable.

Recognizing the residual risks posed by severe core damage accidents, it is the policy of the CNSC to encourage the development and use of Severe Accident Management (SAM) strategies. The goal is to ensure that to the extent practicable, means are provided to mitigate the consequences of such events and to minimize the conditional probability of containment failure following a severe core damage accident.

The target for such a conditional probability is to maintain it below 0.1 so that the frequency of early release from containment following severe core damage (with cumulative frequency target of less than 10^{-5} events/year) will not exceed 10^{-6} events per year. The assessment for demonstrating the achievement of these targets is part of the Level 2 PSA scope.

3.13 Containment Codes and Standards

The design of the containment structure, components and systems will be compliant with the CNSC Regulatory Policy Statement R-7 (Reference [1]), applicable Canadian standards shown in Table 3-2, and the Project Licensing Basis Document (Reference [4]) requirements. International requirements as outlined in the IAEA Safety Standards and Safety Guides for Design (Reference [13] and [14]) should be addressed.

Table 3-2
Applicable CSA Standards for Containment Design

Document Number	Title
CAN/CSA–N285.0	General Requirements for Pressure–Retaining Systems and Components in CANDU Nuclear Power Plants
CAN/CSA–N285.3	Requirements for Containment Systems Components in CANDU Nuclear Power Plants
CAN/CSA–N285.5	Periodic Inspection of CANDU Nuclear Power Plant Containment Components
CSA N287.1	General Requirements for Concrete Containment Structures for CANDU Nuclear Power Plants
CAN/CSA–N287.2	Material Requirements for Concrete Containment Structures for CANDU Nuclear Power Plants
CAN/CSA N287.3	Design Requirements for Concrete Containment Structures for CANDU Nuclear Power Plants
CAN/CSA–N287.4	Construction, Fabrication and Installation Requirements for Concrete Containment Structures for CANDU Nuclear Power Plants
CSA N287.5	Examination and Testing Requirements for Concrete Containment Structures for CANDU Nuclear Power Plants
CSA N287.6	Pre–Operational Proof and Leakage Rate Testing Requirements for Concrete Containment Structures for CANDU Nuclear Power Plants
CAN3–N287.7	In–Service Examination and Testing Requirements for Concrete Containment Structures for CANDU Nuclear Power Plants
CAN/CSA–N288.2	Guidelines for Calculating Radiation Doses to the Public from a Release of Airborne Radioactive Material under Hypothetical Accident Conditions in Nuclear Reactors
CAN3–N289.1	General Requirements for Seismic Qualification of CANDU Nuclear Power Plants
CAN3-N289.2	Ground Motion Determination For Seismic Qualification of CANDU Nuclear Power Plants
CAN3–N289.3	Design Procedures for Seismic Qualification of CANDU Nuclear Power Plants
CAN3-N289.4	Testing Procedures for Seismic Qualification of CANDU Nuclear Power Plants
CAN3-N289.5	Instrumentation, Inspection and Records for Seismic Qualification of CANDU Nuclear Power Plants
CAN3-N290.6	Requirements for Monitoring and Display of CANDU Nuclear Power Plant Status in the Event of an Accident.

Notes for Table 3-2:

1) General: The Canadian Standards Association Standards may call up other International Standards that are applicable. Standards prepared by ASME and ANSI for pressure vessels and piping are applied in this manner.

2) The edition and issue date of the Standards listed above are as per the dates indicated in the Licensing Basis Document (Reference [4]), or the applicable code effective date in the Construction License or as approved by the Regulator.

4. CONTAINMENT SYSTEMS REQUIREMENTS

4.1 Basic Requirements

4.1.1 General

The following sections present the basic safety requirements for the containment system which is a designated safety system. The CNSC Regulatory Document R-7 (Reference [1]) specifies the complete set of Canadian Regulatory requirements for Containment Systems, which shall be complied with.

a) All equipment required for correct operation of the containment system shall be considered to be part of that system and shall meet all requirements of this document, except as noted in (b) below.

b) Equipment required to supply compressed air, electrical power or cooling water to equipment for operation of the containment system will be considered as safety support equipment.

4.2 Design Requirements

a) A containment system shall be provided to ensure that any release of radioactive materials to the environment in a design basis event or a limited core damage accident would be below specified limits. This system may include, depending on design requirements: leak tight structures; associated systems for the control of pressures and temperatures; and features for the isolation, management and removal of fission products, hydrogen, oxygen and other substances that could be released into the containment atmosphere.

b) All piping that is part of the pressure boundary of the primary heat transport system, excluding boiler tubing, shall be totally within the containment structure.

c) The containment structure, components and systems, or parts of systems, shall satisfy the applicable requirements of CNSC Regulatory Policy Statement R-7, Requirements for Containment Systems for CANDU Nuclear Power Plants (Reference [1]), and the CSA Standards listed in Table 3-2.

d) All identified design basis events and limited core damage accidents shall be taken into account in the design of the containment system. In addition, consideration shall be given to the provision of features for the mitigation of the consequences of selected severe core damage accidents in order to limit the release of radioactive materials to the environment.

e) Containment shall be seismically qualified in accordance with the Safety Design Guide: 108-03650-SDG-002 (Reference [7]). This includes containment penetrations to the extent that the containment boundary shall not be compromised.

4.2.1 Containment Envelope

There shall be a clearly defined continuous containment envelope that is capable of limiting to an acceptably low value the release of radioactive materials from the plant for all postulated design

basis events and limited core damage accidents. The boundary of this containment envelope shall be defined for all conditions that could exist in the operation or maintenance of the reactor, or following an accident.

4.2.2 Minimum Allowable Performance Standards (MAPS)

Minimum allowable performance standards (MAPS) shall be defined for the containment system and shall be listed or referenced in the Safety Analysis Report. The MAPS shall also be specified for all major equipment and subsystems necessary for correct operation of the containment system.

The containment system shall be capable of accommodating the release of radioactive material, resulting from design basis events and limited core damage accidents, such that the reference dose limits stated in the Licensing Basis Document (Reference [4]) and reproduced in Table 3-1, are not exceeded.

4.2.3 Strength of the Containment Structure

a) The strength of the containment structure, including access openings and penetrations and isolation valves, shall have sufficient margins of safety on the basis of the potential internal pressures, negative pressures, temperatures, dynamic effects such as missile impacts, and reaction forces anticipated to arise as a result of design basis events and limited core damage accidents. The effects of other potential energy sources, including, for example, possible chemical and radiolytic reactions, shall also be considered. In calculating the necessary strength of the containment structure, natural phenomena and human induced events shall be taken into consideration, and provision shall be made to monitor the condition of the containment and its associated features.

b) The positive design pressure of each part of the containment envelope shall be not less than the highest pressure which could be generated in that part as a result of any postulated events as specified in R-7 Tables 1 and 2 for which radioactive materials may be released into the containment envelope.

c) It shall be shown that, for all design basis events and limited core damage accidents, the structural integrity of containment will not be impaired to a degree that consequential damage to reactor systems could result.

d) It shall be shown that, for all events specified in R-7 Tables 1, 2 and 3, no damage to the containment structure will occur.

e) The Safety Analysis Report shall contain the following design parameters and their basis:

   1) Positive design pressure(s); and

   2) The maximum allowable leakage rate at the positive design pressure.

4.2.4 Containment Leakage

a) The reactor containment system shall be designed so that the prescribed maximum leakage rate is not exceeded for any design basis event and limited core damage accident that release radioactive materials within the containment boundary. The maximum leakage rate is the rate used in the accident analysis of such events, less allowance for uncertainties and tolerances.

b) The containment structure and equipment and components affecting the leak tightness of the system shall be designed and constructed so that the leak rate can be tested at the design pressure after all penetrations have been installed. Determination of the leakage rate of the containment system at periodic intervals over the service lifetime of the reactor shall be possible at reduced pressures that permit estimation of the leakage rate at the containment design pressure. However, if the test results, when extrapolated to full design pressure, indicate leakage, in excess of the test acceptance leakage rate, a leakage rate test at the full positive design pressure shall be carried out to demonstrate that the maximum allowable leakage rate is not exceeded. A leakage test at full design pressure shall be carried out a minimum of once per six years in any case.

4.2.5 Environmental Requirements

a) All parts of the containment system which may be required to operate, or to continue operating, in response to any design basis accidents, shall be designed to meet all necessary performance requirements while subjected to the most severe environmental conditions which could be present when or before such operation is required. These conditions may include, but are not necessarily limited to, the effects of debris, steam, water, high temperature, radiation and pressure differentials.

b) Qualification is required for all containment equipment which may be required to operate following exposure to any of the above conditions. Qualification shall consist of tests to demonstrate to the extent practicable that the type of equipment can operate under conditions similar to those which would exist during or following the design basis accidents. Where such tests are impracticable, analysis is required to demonstrate that this requirement is met.

c) The containment system shall be designed such that, for all design basis events and limited core damage accidents, dynamic effects or jet forces caused by the events cannot result in impairment of the system to an extent that the system's relevant requirements of dose limits, structural integrity and leakage criteria would not be met.

Requirements on environmental qualification of systems are given in the Safety Design Guide: 108-03650-SDG-003 (Reference [11]).

4.2.6 Availability Requirements

a) The containment system will be designed such that the fraction of time for which it is not available when required is less that 10^{-3} years per year. A system will be considered available only if it meets all its minimum allowable performance standards. The adequacy of

the containment system availability will be verified by analysis and included or referenced in the Safety Analysis Report for the plant.

b) The availability of any safety support equipment necessary for correct operation of a containment system will be commensurate with the availability requirements of the containment system itself. Availability calculations to demonstrate that this requirement can be met will be included or referenced in the Safety Analysis Report.

c) The design of the containment system and its safety support equipment shall take into account the long-term reliability requirements of those components which must continue to function following an accident. Standards for the long-term reliability of such components shall be prepared.

d) The design shall have sufficient redundancy such that no single failure of a containment system can result in impairment of that system to an extent that the system will not meet its minimum allowable performance standards under accident conditions. This requirement does not apply to passive components which are not required to change state and which do not depend on safety support equipment in order to perform their design functions, provided that they are designed, manufactured, inspected and maintained to standards sufficient to ensure plant safety. <u>However, US type Single Failure Criterion is applicable to the design of containment systems.</u>

e) Correct operation of a containment system shall not be dependent on any electrical power supply unless the electrical supply is designed to be continuously available during normal operation and anticipated operational transients.

f) As far as practicable, all containment system equipment will be designed such that its most probable failure modes will not result in a reduction in safety. All containment equipment shall be monitored or tested at a frequency which is adequate to demonstrate compliance with the availability requirements.

g) As far as practicable, the design will be such that all maintenance and availability testing which may be required when the containment systems are required to be available can be carried out without a reduction in the effectiveness of each containment system below its minimum allowable performance standards.

h) As far as practicable, it shall be possible to put a failed component into a safe state, or convert the failure to a safe failure in some other manner.

i) Provision shall be made to actuate each containment system manually from the main control room. It shall also be possible to manually initiate the action of each containment system from at least one location remote from the main control room.

j) It shall not be readily possible for an operator to prevent actuation of a containment system, when such actuation is required.

k) The containment system shall not be intentionally made unavailable, unless all of the following conditions are met:

   1) The reactor is in a guaranteed shutdown state.

2) Procedures for intentionally making the containment system unavailable shall be prepared.
3) All reactor cooling systems are sufficiently cooled and depressurized in accordance with procedures. And,
4) All irradiated fuel within the containment envelope is adequately cooled and has an alternate cooling supply available.

4.2.7 Separation and Independence Requirements

a) As far as practicable, containment system shall be physically and operationally independent from other safety systems.
b) As far as practicable, a containment system shall be independent from all process systems. This requirement does not apply to equipment required to reduce the pressure or the free radioactive material within the containment envelope, or the equipment required to limit the release of radioactive material from the containment envelope following an accident, provided that such equipment is normally operating when the reactor is operating.
c) Normal functioning of process systems shall not reduce the effectiveness of a containment system such that its minimum allowable performance standards would not be met.
d) Design principles for separation of redundant instrumentation channels and the services to them, associated with a containment system, shall be prepared.
e) If subsystems of containment are considered to be independent for the purpose of safety analyses, the principles of separation and independence of such subsystems shall be prepared. Principles for separation and independence of systems and equipment are discussed in 108-03650-SDG-004 (Reference [10]).

4.2.8 Shielding Requirements

The design of the containment system and associated equipment shall incorporate sufficient provision for shielding to ensure that radiation fields would not be excessive in areas of the plant that must remain habitable, or to which access might be required following an accident.

4.3 Testing Requirements

a) The containment structure shall be designed and constructed so that it is possible to perform a pressure test at a specified pressure to demonstrate its structural integrity before operation of the plant and over the plant's lifetime.
b) A test acceptance leakage rate shall be established, giving the maximum acceptable leakage rate under the actual measurement tests. The margin between the maximum allowable leakage rate and the test acceptance rate shall require approval by the designer prior to the first leakage rate tests.

4.3.1 Commissioning Containment Pressure Tests

a) Prior to first criticality, positive pressure proof tests shall be done to demonstrate the structural integrity of all parts of the containment envelope and the containment system.

b) Positive pressure proof tests shall be done at a pressure not less than 1.15 times the positive design pressure for each part of the containment envelope.

c) If any of the above tests are impracticable, testing of representative equipment in a laboratory may be accepted, if approved by the Regulator.

d) Pressure proof tests, and leakage rate test at full design pressure, shall be repeated following any major modification of the containment envelope or after the containment system has been subjected to elevated pressure differentials as a result of an accident or after the containment system has been subjected to any severe environmental effects.

e) Prior to first criticality, the leakage rate of the containment envelope shall be measured to demonstrate that it is not greater than the acceptance leakage rate. Measurements shall be made at a range of pressures up to and including the positive design pressure for each part of the containment envelope. The test shall be conducted with containment components in a state sufficiently representative of those that would exist following an accident to demonstrate that the appropriate leakage rate would not be exceeded under such conditions.

f) Testing of individual penetrations, isolating devices and airlocks shall be done for those penetrations for which it is necessary to obtain baseline leakage measurements against which the future in-service leakage tests may be compared.

4.3.2 Testing of Containment Equipment

a) All containment equipment shall be monitored or tested at a frequency that is adequate to demonstrate compliance with the availability requirements for containment.

b) Prior to first criticality, tests of the containment system equipment shall be performed to verify that all design requirements have been achieved.

c) Prior to first criticality, tests shall be carried out on all electrical wiring associated with the containment system to demonstrate that all connections are in accordance with design.

d) To the maximum extent practicable, tests to demonstrate that containment equipment meets its minimum allowable performance standards shall be carried out at a frequency of not less than once per six years.

4.3.3 Containment Inspections

a) External visual inspections of the containment envelope, including appurtenances and penetrations shall be carried out in conjunction with the pressure proof tests, leakage rate tests and tests of penetrations and isolating devices.

b) The design of containment isolation devices shall facilitate periodic inspection.

c) The interior of the containment envelope shall be visually inspected at the required frequency.

4.4 Containment Air Locks

a) Access by personnel to the containment shall be through airlocks equipped with doors that are interlocked to ensure that at least one of the doors is closed during reactor operations and in accidents. This requirement shall also apply to equipment air locks, where provided.

b) At least two airlocks shall be provided, to provide emergency access or exit in case one airlock is unavailable.

c) Each airlock shall be provided with adequate pressure relief arrangement.

4.5 Internal Structures of the Containment

a) The design shall provide for ample flow routes between separate compartments inside the containment. The cross-sections of openings between compartments shall be of such dimensions as to ensure that the pressure differentials occurring during pressure equalization in design basis accidents do not result in damage to the pressure bearing structure or to other systems of importance in limiting the effects of design basis accidents.

b) This requirement includes the provision of adequate shielding of system components.

4.5.1 Coverings and Coatings

a) The coverings and coatings for components and structures within the containment system shall be carefully selected and shall be used only if necessary. The methods of application shall be specified, to ensure fulfilment of their safety functions and to minimize interference with other safety functions in the event of the deterioration of the coverings and coatings.

b) Coverings and coatings shall be selected to minimize deterioration of the material during normal operation or an accident to limit the amount of debris created to ensure the strainer is not obstructed to the extent that the LTC could not perform its function.

4.6 Removal of Heat from the Containment

The capability to remove heat from the reactor containment shall be ensured. The safety function shall be fulfilled of reducing the pressure and temperature in the containment, and maintaining them at acceptably low levels, after any accidental release of high energy fluids in design basis accidents. The system performing the function of removing heat from the containment shall have adequate reliability and redundancy to ensure that this can be fulfilled, on the assumption of a single failure.

4.6.1 Control and Cleanup of the Containment Atmosphere

a) Systems to control internal pressure, fission products, hydrogen, oxygen and other substances that may be released into the reactor containment shall be provided as necessary to do the following:
   1) to reduce the amount of fission products that might be released to the environment in design basis accidents; and
   2) to control the concentration of hydrogen, oxygen and other substances in the containment atmosphere in design basis events and limited core damage accidents in order to prevent deflagration or detonation which could jeopardize the integrity of the containment.

b) Such systems shall have suitable redundancy in components and features to ensure that the necessary safety function is performed, on the assumption of a limiting single failure.

c) The design of the plant should be such that, following an accident, it is possible to isolate all engineered sources of compressed air and other non-condensable gases leading into the containment atmosphere, other than those required for the operation of necessary equipment.

4.7 Status Monitoring Requirements

a) The status of all important equipment shall be monitored from the Main Control Room.

b) Any gross breach of the containment envelope shall be readily and reliably detected.

4.7.1 Inadvertent Operation

The containment system shall be designed, as far as practicable, so that inadvertent operation of all or part of the system will not have a detrimental effect of the safety of the plant.

4.7.2 Post Accident Operator Action

a) The intended operation of the system in response to abnormal conditions shall not prevent personnel from conducting activities that are required following those conditions.

b) Above requirement in (a) includes the provision of adequate shielding of system components.

c) If operator action is required for actuation of any containment equipment following an accident, the following conditions must be met:
   1) there shall be instrumentation to give the operator clear and unambiguous indication of the necessity for operator action;
   2) the reliability of such instrumentation shall be commensurate with the requirements for the availability of the containment system. If indication of only a single parameter is required, the instrumentation shall be part of the containment system;
   3) there shall be 15 minutes available following such clear and unambiguous indication before the operator action is required; and

d) There shall be clear, well-defined and readily available operating procedures to identify the necessary actions.

5. CONTAINMENT EXTENSIONS REQUIREMENTS

a) Containment extensions, consisting of systems, or sections of systems (including electrical penetrations), which form part of the containment boundary, shall satisfy the requirements of CNSC Regulatory Policy Statement R-7 "Requirements for Containment Systems for CANDU Nuclear Power Plants" (Reference [1]), CAN/CSA-N285.0 "General Requirements for Pressure Retaining Systems and Components" (Reference [5]), and CAN/CSA-N285.3 "Requirements for Containment System Components in CANDU Nuclear Power Plants" (Reference [2]).

b) Containment extensions shall be seismically qualified in accordance with 108-03650-SDG-002 (Reference [7]), according to the following criteria:

   1) For fluid systems in which the isolation valves are open, and which are also open to the containment atmosphere or connected to primary heat transport system, two isolation barriers (i.e., two open valves) shall be qualified to close during or after the DBE.

   2) For fluid systems in which the isolation devices are normally closed or which form closed systems inside or outside the containment structure, only one isolation barrier (i.e., one closed valve) is required to be qualified to the DBE.

c) Acceptable seismic qualification of containment extensions and isolation barriers is indicated in Appendix A for various configurations. Subject to Regulatory approval, other configurations for the seismically qualified boundary may also be used, including the use of manually operated valves, where the dose limits can be shown to be satisfied and the valves or valve controls are accessible after the event (for dose limit considerations after an event, see Table 3-1).

d) There shall be no cross-links between a design basis accident that causes a fission product release inside containment and a breach in the containment boundary (e.g., pipewhip damage to containment extensions or to a closed system that continues to perform a safety function, like the recirculated cooling water system).

e) Containment extensions consisting of portions of fluid systems (including the portions of piping from the penetration seal plate to the point of isolation) shall be classified as Class 2 of CAN3-N285.0 (Reference [5]), except for:

   1) Systems or components that are Class 1.

   2) Closed systems inside the containment structure (reactor building) may be Class 6 if all of the following conditions are met:

      i) their design pressure is greater than 0.5 MPa(g), and the design pressure of the containment boundary;

      ii) they are pressure tested regularly, or operated continuously at or above the positive design pressure of containment;

      iii) they are monitored for leaks; and

      iv) other requirements of the system do not require a more stringent classification.

3) Closed systems, inside containment, may be Class 3 if the design provides an adequate barrier (e.g., smallness of size) and it is submitted to and accepted by the Regulatory Authority.

f) The leak monitoring capability required for closed systems shall be capable of detecting leaks from the closed system, and may consist of makeup tank level measurements, detection of system inventory on the floor or in sumps, increased vapour recovery, etc.

g) Closed systems shall be defined in accordance with CNSC Regulatory Policy Statement R-7 (Reference [1]):

"closed system means a piping system which penetrates and forms a closed loop or enclosed volume either inside or outside the containment structure. For closed systems inside containment, the fluid in the system does not directly communicate with either the primary coolant or containment atmosphere".

All other systems shall be considered to be open systems (note that a system having an open vent, or a rupture disk that may rupture during an event, inside the containment structure is an open system).

Relief valves which re-close after an overpressure condition, normally locked closed valves, or which can be confirmed closed by the leak monitoring capability or by administrative procedures can form part of the pressure boundary of a closed system.

h) Changes in the containment boundary that may occur as a result of an event (e.g., boundary extended to the main steam isolation valves as a result of steam generator tube leakage or failure), or due to planned maintenance or off-normal operation, shall be addressed in design by identifying the revised containment boundary and isolation measures. Alternatively, planned maintenance may be performed in the guaranteed shutdown condition without providing a revised containment boundary.

i) The failure position of containment isolation valves shall be designed so loss of support services to the valve will not result in loss of the containment boundary.

j) To minimize the effects of common mode failures, the separation requirements for redundant components or subsystems outlined in the Safety Design Guide on Separation of Systems and Components, 108-03650-SDG-004 (Reference [10]), shall be satisfied.

k) The number of penetrations through the containment shall be kept to a practical minimum.

l) All penetrations through the containment shall meet the same design requirements as the containment structure itself. They shall be protected against reaction forces stemming from pipe movement or accidental loads such as those due to missiles, jet forces and pipe whip.

m) The design shall permit testing of penetrations, isolating devices and airlocks.

n) If resilient seals (such as elastomeric seals or electrical cable penetrations) or expansion bellows are used with penetrations, they shall be designed to have the capability for leak checks at the containment design pressure, independent of the determination of the leak rate of the containment as a whole, to demonstrate their continued integrity over the lifetime of the plant.

o) Each line that penetrates the containment as part of the reactor coolant pressure boundary or that is connected directly to the containment atmosphere, shall be automatically and reliably sealable in the event of a design basis accident in which the leak tightness of the containment is essential to preventing radioactive releases to the environment that are above acceptable limits. These lines shall be fitted with at least two adequate containment isolation valves arranged in series (for lines connected to the heat transport system, normally with one outside and the other inside the containment, but other arrangements may be acceptable depending on the design), and each valve shall be capable of being reliably and independently actuated. Isolation valves shall be located as close to the containment as is practicable. Containment isolation shall be achievable on the assumption of a single failure. If the application of this requirement reduces the reliability of a safety system that penetrates the containment, other isolation methods may be used.

p) Each line of a closed system that penetrates the containment structure and that meets the requirements of Class 2 or higher, and can be continuously monitored for leaks, needs no further isolation. All other closed systems shall be provided with a single isolation valve, on each line penetrating the containment. The valves shall be located outside containment as close as practicable to the containment structure. Valves required for process purposes may be used as isolation valves for these closed loops.

q) The isolation barriers for metal extensions of the containment envelope shall satisfy the requirements outlined in CNSC Regulatory Policy Statement R-7 “Requirements for Containment Systems for CANDU Nuclear Power Plants” (Reference [1]). The requirements for piping systems are defined in the Appendix of that document, and are summarized and shown schematically in Appendix A, but R-7 should be consulted directly for situations that differ from those described.

r) Where a closed manual isolation valve is used to satisfy containment isolation requirements, it must be locked closed or continuously monitored. Where an open isolation valve is used, the valve shall be designed to be tested periodically and the valve leakage shall be shown to be within acceptable limits. Leakage criteria for isolation valves shall be established and documented.

s) Manual open isolation valves shall be accessible for closure after an accident.

6. DOCUMENTATION

a) A Design Manual for the Containment System shall be prepared. This report shall clearly identify the containment envelope. A listing of containment extensions and penetrations shall be provided.

b) Systems, structures or components which form part of the containment boundary, or penetrate the containment boundary shall be indicated in the design descriptions for those systems and shall be listed in the Design Manual of the Containment System.

c) The Safety Analysis Report shall clearly state the values of, and bases for, the following containment system design parameters:

   1) positive design pressure(s);

   2) negative design pressure(s) where applicable, and

   3) the maximum allowable leakage rate at the positive design pressure.

d) Minimum Allowable Performance Standards (MAPS) shall be defined for the containment system in the appropriate Design documentation, and shall be listed or referenced in the Safety Analysis Report for the plant. These requirements will include the minimum allowable performance standards for all major equipment necessary for the correct operation of the containment system.

e) The application for a construction approval shall identify any aspects of the design which fail to comply with the applicable requirements of References [1], [5], and [12]. In Canada, all exceptions to the requirements of these standards shall require approval by the Regulator prior to their implementation.

f) A list of additional codes and standards, than those listed in Table 3-2 to be applied to the containment system and the extent of their application shall be prepared. In Canada, this shall require approval by the Regulator prior to the issuance of a construction approval.

g) A report demonstrating the adequacy of the shielding provisions shall be prepared and will specify:

   1) the postulated accident which results in the largest release of radioactive material inside the containment envelope;

   2) all areas to which access might be required at some time following such an accident, with the frequency and duration of necessary access, and

   3) the maximum radiation fields expected in such areas when access might be required.

h) Containment extensions and their code classification shall be indicated on system flowsheets and in the Design Descriptions for the systems that form part of the containment envelope.

i) Details of the inspection of containment extensions, as required, shall be specified in the Periodic Inspection Program for containment components.

j) Where a containment extension is part of a pressure retaining system, the code classification shall be shown in the System Classification List.

k) An in-service test program for penetrations, airlocks and isolating devices shall be prepared. The program shall detail for each type of penetration, isolating device and airlock to be tested, the nature of the test, test frequency, and leakage acceptance criteria.

7. REFERENCES

[1] AECB, "Requirements for Containment Systems for CANDU Nuclear Power Plants", Regulatory document R-7, 1991-02-21.

[2] Canadian Standards Association, “Requirements for Containment System Components in CANDU Nuclear Power Plants”, CAN/CSA-N285.3.

[3] Canadian Nuclear Safety Commission, “Radiation Protection Regulations”, 2000-05-31.

[4] Licensing Basis for Advanced CANDU Reactor : 108-00580-LBD-001

[5] Canadian Standards Association, “General Requirements for Pressure-Retaining Systems and Components in CANDU Nuclear Power Plants”, CAN/CSA-N285.0.

[6] Canadian Standards Association, “Periodic Inspection of CANDU Nuclear Power Plant Containment Components”, CAN/CSA-N285.5.

[7] “Safety Design Guide, Seismic Requirements”, 108-03650-SDG-002.

[8] “Safety Design Guide, Safety Related Systems”, 108-03650-SDG-001.

[9] “Safety Design Guide, Radiation Protection”, 108-03650-SDG-007.

[10] “Safety Design Guide, Separation of Systems and Components”, 108-03650-SDG-004.

[11] “Safety Design Guide, Environmental Qualification”, 108-03650-SDG-003.

[12] Canadian Standards Association, Series on “Concrete Containment Structures for CANDU Nuclear Power Plants”, CAN/CSA-N287.

[13] IAEA, “Safety of Nuclear Power Plants: Design ”, Safety Standards Series No. NS-R-1 (NS181), IAEA, Vienna.

[14] IAEA, “Design of the Reactor Containment Systems in Nuclear Power Plants”, Safety Guide 50-SG-D12, IAEA, Vienna, 1985.

Appendix A

Acceptable Containment Isolation Barriers

The following summarizes the requirements of CNSC Regulatory Policy Statement R-7 (Appendix) and provides typical figures for each case:

a) **Systems Open to the Containment Atmosphere**

Systems connected to the containment atmosphere shall be provided with isolation barriers (normally located outside the containment structure), as follows:

1) Two automatically closing valves (see Figure 1(a))

   Two automatically closing Class 2 isolation valves, one of which may be a check valve, for lines that may be open to the containment atmosphere (a valve is "automatically closing" if it is closed by the containment isolation system signal, or is closed directly by a condition caused by the accident or a system characteristic, with no operator action). The containment isolation signal shall have a higher priority than a normal operation signal, if two opposite signals can be generated in accident conditions.

   Both valves shall be seismically qualified to close during the Design Basis Earthquake (DBE).

2) Two closed valves (see Figure 1(b))

   Two closed Class 2 isolation valves, for lines normally closed to the containment atmosphere. Only one valve needs to be seismically qualified for the DBE.

3) One closed valve (see Figure 1(c))

   One closed Class 2 isolation valve, for lines of diameter 50 mm nominal (NPS 2) or less, normally closed to the containment atmosphere and connected to an easily defined closed system outside containment. The valve and piping up to the seal plate at the containment structure shall be seismically qualified for the DBE.

4) No isolation valve (see Figure 1(d))

   Closed piping systems that satisfy the following need no further isolation:

   i) The containment boundary components are Class 2

   ii) The system can be continuously monitored for leaks

   The closed system shall be seismically qualified for the DBE.

5) One isolation valve (see Figure 1(e))

   Closed piping systems with the following design need one isolation valve:

   i) The containment boundary components are Class 2

   ii) The system cannot be continuously monitored for leaks

   The closed system shall be seismically qualified for the DBE.

The isolation valve may be replaced by crimping if crimping rules are satisfied.

6) Instrument Tubing (see Figure 1(f))

This is a special case of (a) (5) above, where it may not be possible to provide leak monitoring and where a closed valve cannot be used because a safety function must be maintained. The instrument and tubing forms a closed system and an open valve or crimping is required for isolation. The tubing and valve are Class 2 or higher code class. The instrument may be of a different code class or excluded from code classification, depending on commercial availability.

The instrument, valve, and piping up to the seal plate at the containment structure shall be qualified for the DBE.

b) **Systems Closed to the Containment Atmosphere**

Systems which penetrate the containment boundary and are closed systems within the containment structure shall be provided with isolation as follows:

1) No isolation valve (see Figure 2(a))

Closed Class 2 systems inside the containment structure, seismically qualified and can be monitored continuously for leaks need no isolation valves. The closed system shall be seismically qualified for the DBE.

2) One isolation valve (see Figure 2(b))

Closed Class 2 systems inside the containment structure, seismically qualified but cannot be monitored continuously for leaks need a single manual isolation valve outside the containment structure. The valve may be used for other process purposes, but must be accessible after an accident. The valve may be replaced by crimping if crimping rules are satisfied. The closed system shall be seismically qualified for the DBE.

3) One isolation valve (see Figure 2(c))

Closed Class 6 piping systems inside the containment structure which satisfy the design and operating pressure requirements for Class 6 systems, and which are monitored for leaks, shall be provided with a single manual isolation valve.

The closed system shall be seismically qualified for the DBE. As an alternative, the isolation valve and piping to the seal plate at the containment structure may be qualified.

c) **Systems Connected to the Heat Transport System**

Systems which penetrate the containment boundary and are connected to the primary heat transport system shall be provided with isolation as follows:

1) Open Isolation Valves (see Figures 3(a) and 3(b))

Systems having normally open lines shall be provided with two isolation valves, Class 1, one of which can be manually closed from the control room or is automatically closed. A check valve located inside the containment structure is an acceptable automatically closing valve. Both valves shall be seismically qualified. The manual valve outside the containment may be replaced by crimping if crimping rules are satisfied.

2) Closed Isolation Valves (see Figures 3(c) and 3(d))

   Systems having normally closed lines shall be provided with two normally closed isolation valves. A check valve located inside the containment structure may be used as one of the isolation valves. The piping inside the containment structure, up to the seal plate on the containment boundary shall be seismically qualified. Alternatively, the valve and piping up to the seal plate outside the containment structure may be seismically qualified, if it is shown that the operator can close the valve before a release of radioactive material can occur.

3) Small Lines (25 mm diameter or less) (see Figure 3(e))

   A single closed Class 1 isolation valve located inside the reactor building may be used for small lines that are normally closed. The line from the valve to the seal plate at the containment boundary shall be Class 2, and connected to a closed system outside the containment structure. The valve and piping up to the seal plate at the containment structure shall be seismically qualified for the DBE.

4) Instrument Lines (see Figure 3(f))

   This is a special case of c)(3) above, where it may not be possible to provide a closed valve in order to maintain a safety function. The tubing up to the instrument shall be Class 1, and an isolation valve outside the containment structure shall be provided (the instrument isolating valve is an acceptable isolating valve, provided the instrument is as close as practicable to the containment structure). The instrument may be of a different code class or excluded from code classification, depending on commercial availability. The instrument and tubing shall be seismically qualified. The valve may be replaced by crimping, provided that the rules for crimping are satisfied.

Figures

Systems Open to the Containment Atmosphere

1 (a): Two Automatically Closing Valves

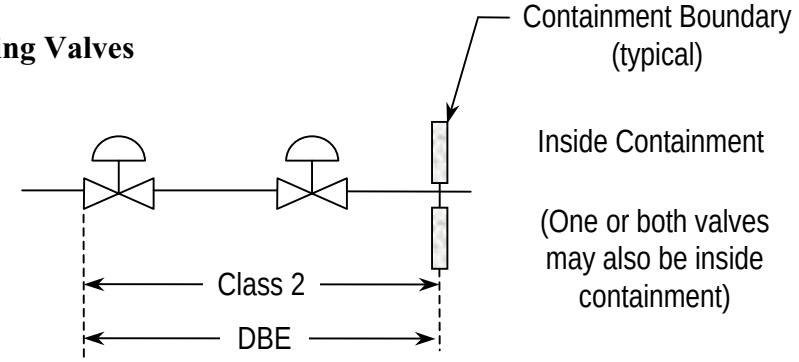

1 (b): Two Closed Valves

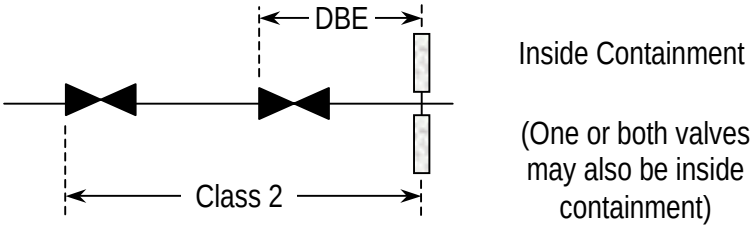

1 (c): One Closed Valve

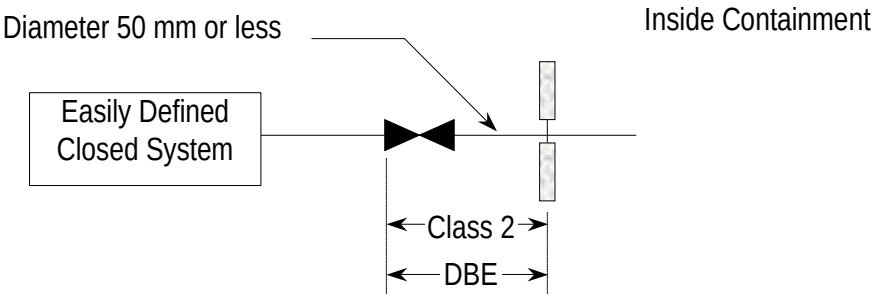

1 (d): No Isolation Valve

Conditions: Containment design pressure inside closed system
Monitored for leaks

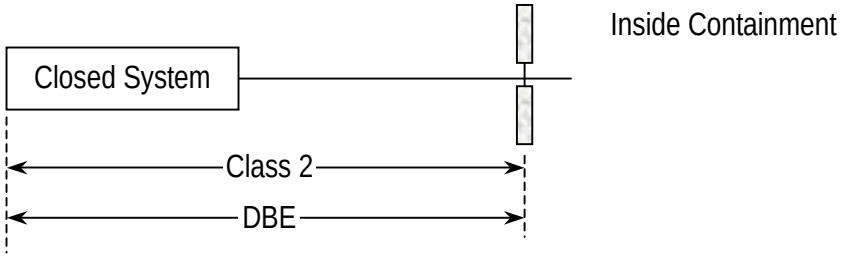

1 (e): One Isolation Valve

Conditions: Containment design pressure inside closed system
Not monitored for leaks

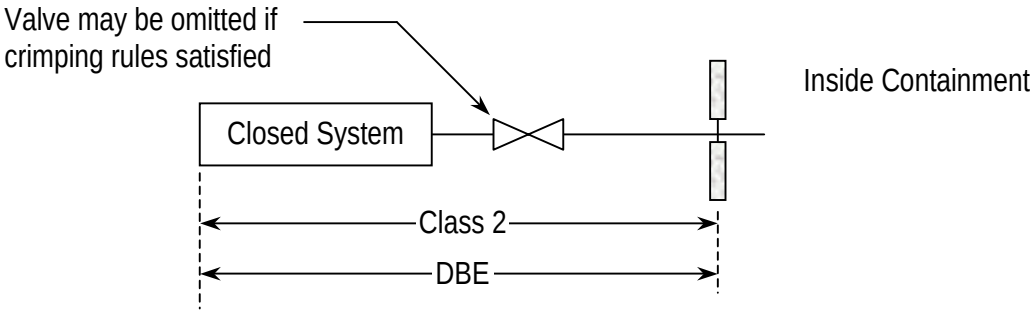

1 (f): Instrument lines (tubing 19 mm or smaller)

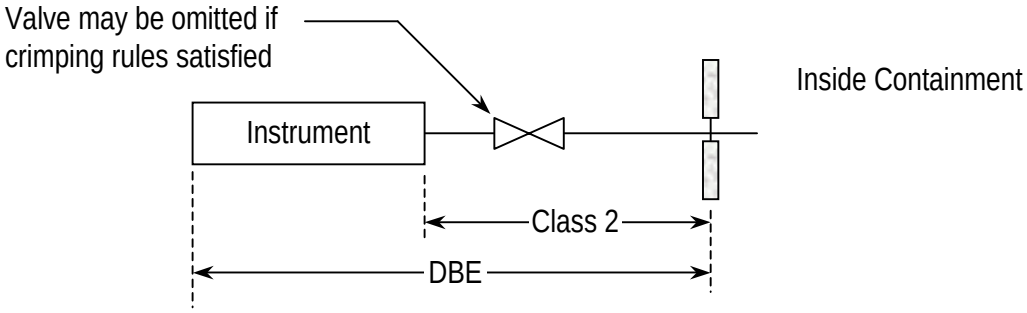

Systems Closed to the Containment Atmosphere

2 (a): No Isolation Valve

Conditions: Containment design pressure inside closed system
Monitored for leaks

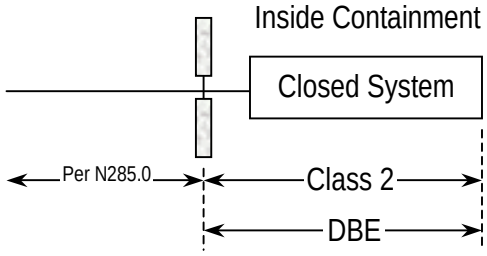

2 (b): One Isolation Valve

Conditions: Containment design pressure inside closed system
Not monitored for leaks

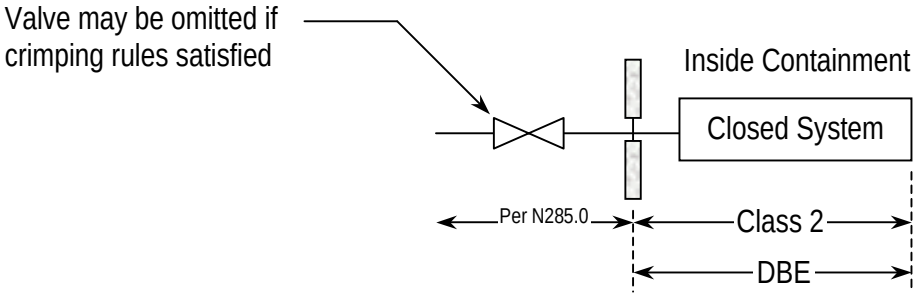

2 (c): One Isolation Valve

Conditions: Design pressure > 500 kPa(g)
Operated at or above containment design pressure, 124 kPa(g)
Monitored for leaks

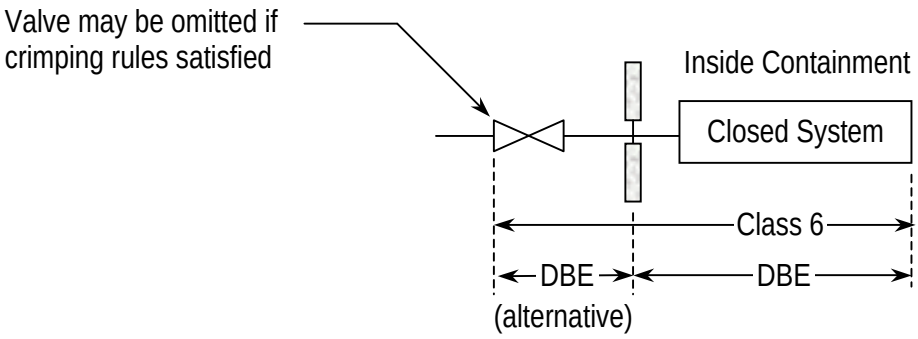

Systems Connected to the Heat Transport System

3 (a): Open Isolation Valves

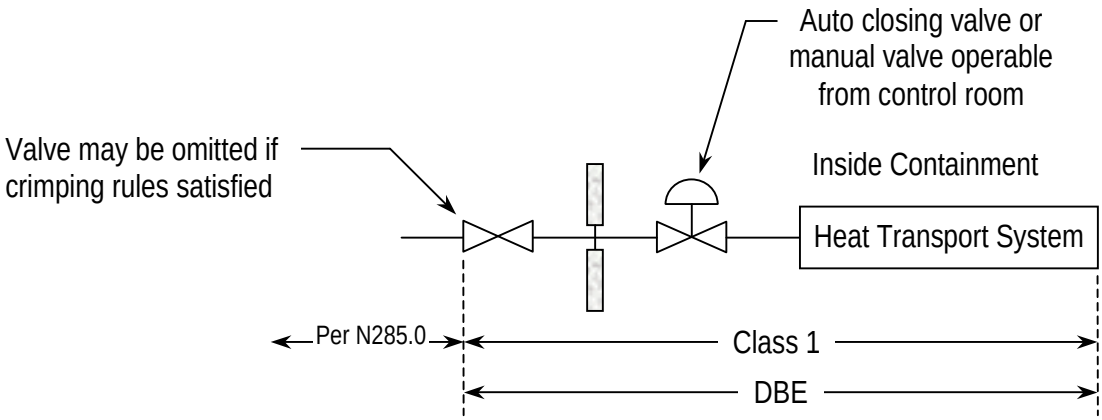

3 (b): Open Isolation Valves

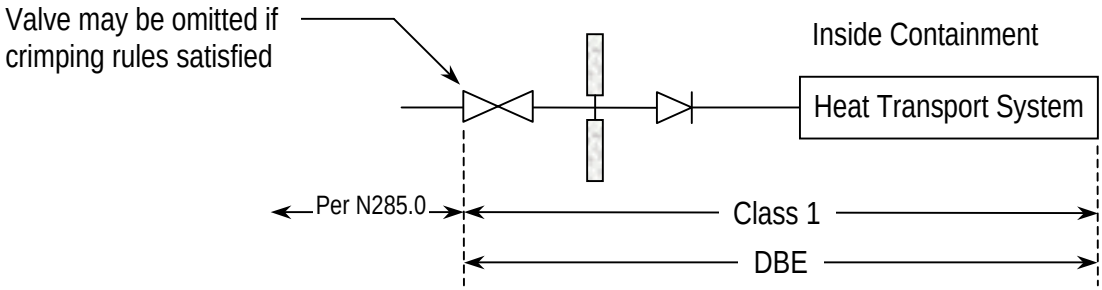

3 (c): Closed Isolation Valves

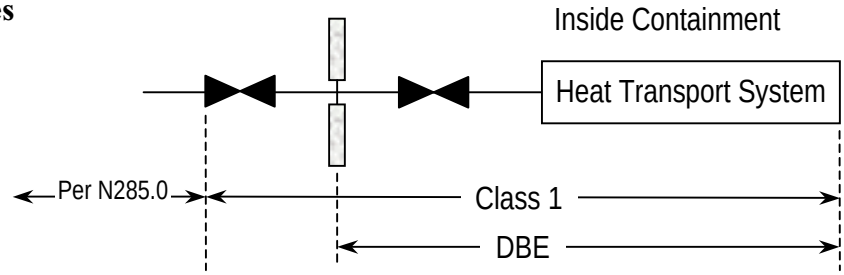

3 (d): Closed Isolation Valves

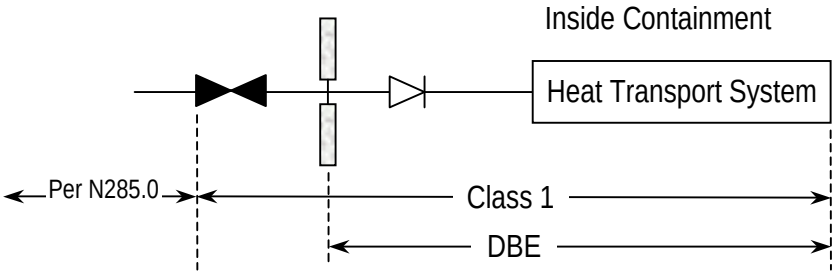

3 (e): Small Lines (25 mm diameter or less)

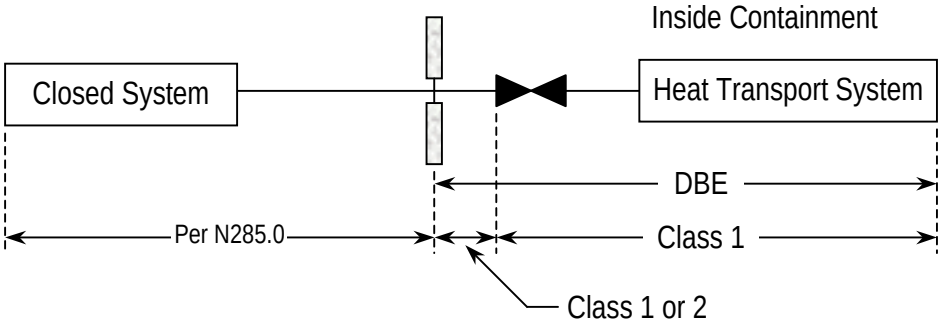

3 (f): Instrument Line (tubing 19 mm (3/4 inch) or smaller)

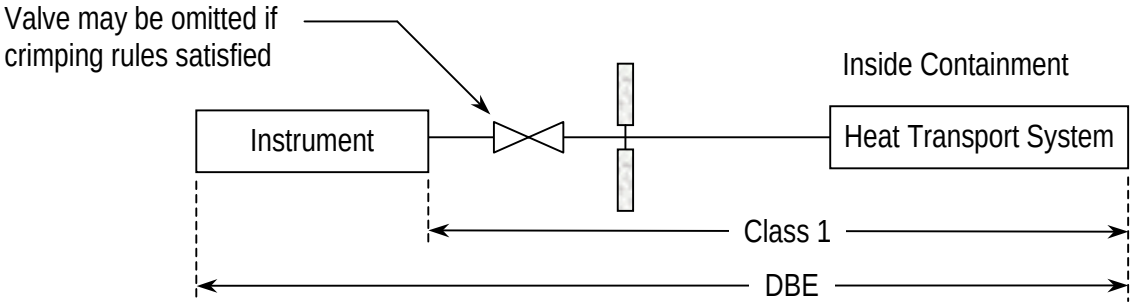

Appendix B

List of Safety Design Guides

IDENTIFICATION	TITLE
108-03650-SDG-001	Safety Related Systems
108-03650-SDG-002	Seismic Requirements
108-03650-SDG-003	Environmental Qualification
108-03650-SDG-004	Separation of Systems and Components
108-03650-SDG-005	Fire Protection
108-03650-SDG-006	Containment
108-03650-SDG-007	Radiation Protection

Appendix C

Acronyms

AC	Alternating Current
ACR™*	Advanced CANDU Reactor™
AECL	Atomic Energy of Canada Limited
ALARA	As Low As Reasonably Achievable
ASDV	Atmospheric Steam Discharge Valves
BOP	Balance Of Plant
CA	Control Absorber
CANDU®	Canadian Deuterium Uranium
CBM	Condition Based Maintenance
CCP	Critical Channel Power
CCW	Condenser Cooling Water
CHF	Critical Heat Flux
CNSC	Canadian Nuclear Safety Commission
COG	CANDU Owners Group
CRT	Cathode Ray Tube
CSA	The Canadian Standards Association
D_2O	Heavy Water
DBE	Design Basis Earthquake
DC	Direct Current
DCS	Distributed Control System
DEL	Derived Emission Limit
DG	Diesel Generator
DUPIC	Direct Use of spent PWR fuel In CANDU
EAB	Exclusion Area Boundary
ECCS	Emergency Core Cooling System
ECI	Emergency Core Injection
EDS	Electrical power Distribution System
HTS	Heat Transport System
HV	High Voltage
IAEA	International Atomic Energy Agency
ICRP	International Commission for Radiation Protection
ISO	International Organization for Standardization

---

* ACR™ (Advanced CANDU Reactor™) is a trademark of Atomic Energy of Canada Limited (AECL).

® CANDU is a registered trademark of Atomic Energy of Canada Limited.

LOCA	Loss Of Coolant Accident
LTC	Long Term Cooling
LV	Low Voltage
LWR	Light Water Reactor
MCR	Main Control Room
MOT	Main Output Transformer
MOX	Mixed Uranium and Plutonium Oxide Fuel
MSIV	Main Steam Isolation Valves
MSSV	Main Steam Safety Valves
NEW	Nuclear Energy Worker
NSP	Nuclear Steam Plant
OM&A	Operation, Maintenance and Administration
PAM	Post Accident Management
PSA	Probabilistic Safety Assessment
PTR	Pressure Tube Reactor
PWR	Pressurized Water Reactor
RAB	Reactor Auxiliary Building
RB	Reactor Building
RCU	Reactivity Control Unit
RCW	Recirculated Cooling Water
RSW	Raw Service Water
RWS	Reserve Water System
SAM	Severe Accident Management
SCA	Secondary Control Area
SDS 1	Shut Down System 1
SDS 2	Shut Down System 2
SEU	Slightly Enriched Uranium
SFC	Single Failure Criterion
SST	System Service Transformer
SU	Shutoff Unit
ULC	Underwriter's Laboratories Canada
UPS	Uninterrupted Power Supply
UST	Unit Service Transformer
ZCU	Zone Control Unit