SOUTHERN CALIFORNIA
EDISON®
An EDISON INTERNATIONAL® Company

Dwight E. Nunn
Vice President

March 17, 2004

U. S. Nuclear Regulatory Commission
Document Control Desk
Washington, DC 20555

Subject: **Docket No. 50-361**
Special Report: Inservice Inspection of Steam Generator Tubes, Cycle 13
San Onofre Nuclear Generating Station, Unit 2

Reference: Steam Generator Program Guidelines, Nuclear Energy Institute, Document Number NEI 97-06, Revision 1

Gentlemen:

On March 3, 2004, Southern California Edison (SCE) completed the inservice inspection of steam generator tubes at San Onofre Nuclear Generating Station Unit 2. The attached report is submitted in accordance with Technical Specification (TS) 5.7.2.c reporting requirements:

- Report the number of tubes plugged and tubes sleeved in each steam generator within 15 days of completing the inspection;
- Report the complete results of steam generator tube inspections within 12 months of inspection completion;
- Report the results of steam generator tube inspections which fall into Category C-3 prior to resumption of plant operation.

The attachment to this letter, "Special Report – Inservice Inspection of Steam Generator Tubes," which was prepared in accordance with the referenced industry guidance, satisfies these reporting requirements. The report contains no new commitments.

Independent from the TS 5.7.2.c reporting requirements, this report also incorporates results of a secondary side inspection of eggcrate tube supports using remote video equipment.

If you require any additional information, please advise.

Sincerely,

Attachments:

cc: B. S. Mallett, Regional Administrator, NRC Region IV
B. M. Pham, NRC Project Manager, San Onofre Units 2 & 3
C. C. Osterholtz, NRC Senior Resident Inspector, San Onofre Units 2 & 3
Institute of Nuclear Power Operations (INPO)

A047

P.O. Box 128
San Clemente, CA 92674-0128
949-368-1480
Fax 949-368-1490

SPECIAL REPORT - INSERVICE INSPECTION OF STEAM GENERATOR TUBES

Regulatory Reporting Requirements

Reporting Requirement 5.7.2.c of Appendix A, Technical Specifications to Facility Operating License NPF-10, requires the number of tubes plugged and tubes sleeved in each steam generator to be reported to the Nuclear Regulatory Commission within 15 days following completion of the inspection.

Reporting Requirement 5.7.2.c of Appendix A, Technical Specifications to Facility Operating License NPF-10, requires the results of steam generator tube inspections which fall into Category C-3 to be reported to the Nuclear Regulatory Commission prior to resumption of plant operation.

Reporting Requirement 5.7.2.c of Appendix A, Technical Specifications to Facility Operating License NPF-10, requires the complete results of steam generator tube inspections to be reported to the Nuclear Regulatory Commission within 12 months following completion of the inspection.

Planned Inspection Scope

Table 1 summarizes the planned inspection program. Also, when indications by the bobbin probe were non-quantifiable or distorted, the inspection program included inspection with the Plus-Point Probe. Table 2 provides the list of Nondestructive Examination (NDE) techniques utilized for each degradation mechanism.

Inspection Scope Expansion

There were no significant inspection program scope expansions in response to inspection results.

Results of the Inservice Inspection of Tubes

This report satisfies the listed regulatory reporting requirements.

The contents of this report were prepared using the guidance contained in NEI 97-06, Rev. 1, "Steam Generator Program Guidelines." The NEI guidance is an initiative to unify the industry approach towards steam generator issues and strengthen, where necessary, the steam generator program.

Table 3 summarizes the number of tubes repaired and active degradation mechanisms found. Each tube is only counted once in this listing, although it may also have an eddy current indication of a type below the point in the listing where it appears. The Appendices provide the complete results of the steam generator tubing inservice inspection.

Ten inservice sleeves were found with a reduced inside diameter. In response, SCE took the following actions:

- These ten tubes have been removed from service by plugging both ends of the tubes.
- SCE Nuclear Fuel Management has implemented a conservative assumption in the safety analyses that each inservice sleeve may pose the potential for reactor coolant flow blockage, similar to that of a tube that is removed from service by plugging.

Evaluation of the reduced diameter of these inservice sleeves has not identified a cause. Measures to prevent recurrence include installation process enhancements related to the parent tubing at the location where the lower roll joint of the sleeve is to be performed. These enhancements include:

- Visual examination after the process surface cleaning of the parent tube at this location.
- Eddy current examination with a rotating Plus-Point coil probe of the parent tube at this location.

Table 4 summarizes results of in-situ pressure and leak testing conducted in accordance with EPRI guidelines. These results demonstrate the structural and leakage (i.e., there was no leakage) integrity of the tested tubes. Eddy current testing results and in-situ pressure and leak testing results (Condition Monitoring) provide assurance that performance criteria in the NEI guidance (structural integrity and accident-induced leakage) were met during operation prior to this inspection.

Results of the Secondary Side Inspection (SSI) of Eggcrate Tube Supports

Visual inspections of the steam generator lattice supports for both steam generators at SONGS Unit 2 were completed using remote video equipment. The Unit 2 Cycle 13 inspection encompassed fifteen camera drops on each of the two steam generators. These inspections were conducted from the fifth to the tenth or uppermost lattice support structure.

The results indicate no evidence of ongoing Flow Accelerated Corrosion (FAC). These results are similar to the last lattice inspection on Unit 2 conducted in the Cycle 10 refueling outage. Using the conservative plugging criteria developed from the initial FAC discovery, no tubes were plugged.

Repair of Tubes

Table 5 provides an itemized listing of the tubes plugged in steam generator E-088 along with the corresponding Table 3 category specifying the indication orientation/location.

Table 6 provides an itemized listing of the tubes sleeved in steam generator E-088 along with the corresponding Table 3 category specifying the indication orientation/location.

Table 7 provides an itemized listing of tubes plugged in steam generator E-089 along with the corresponding Table 3 category specifying the indication orientation/location.

Table 8 provides an itemized listing of the tubes sleeved in steam generator E-089 along with the corresponding Table 3 category specifying the indication orientation/location.

Repair Methods, Number of Tubes Repaired and Effective Plugging Percentage

All tube plugging was performed using the design, materials, and installation methods of AREVA (formerly FRAMATOME-ANP or FANP). A "roll" method was used for all tube plugs. Five tubes were "stabilized" in the vicinity of the top of the tubesheet using the design, materials, and installation methods of AREVA.

All tube sleeving was performed using the welded sleeve design, materials, and installation methods of Westinghouse (formerly ABB Combustion Engineering). This repair method is approved for use in Technical Specification 5.5.2.11.f.1.j for Unit 2.

One hundred sixty-six (166) tubes were plugged and one hundred thirteen (113) tubes were sleeved in Steam Generator E-088 during the Unit 2 Cycle 13 refueling outage. To date, a total of nine hundred thirty-nine (939) tubes have been plugged and three hundred forty-five (345) sleeved tubes are in service. The design number of tubes is 9350 tubes and the sleeve to plug equivalency ratio is thirty-eight sleeves per plug. The effective plugging percentage for E-088 is 10.2%.

One hundred forty-three tubes (143) were plugged and fifty-one (51) tubes were sleeved in Steam Generator E-089 during the Unit 2 Cycle 13 refueling outage. To date, a total of nine hundred sixty (960) tubes have been plugged and one hundred eighty-nine (189) sleeved tubes are in service. The design number of tubes is 9350 tubes and the sleeve to plug equivalency ratio is thirty-eight sleeves per plug. The effective plugging percentage for E-089 is 10.4%.

Causes and Corrective Actions

The degradation detected during this inspection remained within the Technical Specification Category C-3. There is no significant update from previous reports of causes and corrective actions for Category C-3 results. The following actions were taken to improve the secondary side chemistry environment for steam generator tubing in both Unit 2 steam generators:

1. Chemical cleaning of the entire tube bundle (full bundle) performed during the Cycle 9 refueling outage in December, 1996.

2. Use of titanium dioxide, an IGA/SCC inhibitor, began immediately following the completion of the Cycle 9 refueling outage in April 1997 for maximum crevice penetration potential. This treatment is ongoing.

3. Use of Ethanolamine (ETA) for pH control of the secondary fluids began in July 1997. This treatment is ongoing.

4. Use of Boric Acid addition in the secondary side began in February 1998 to help reduce denting of the tube supports and stress corrosion cracking of tubing . This treatment is ongoing.

In addition, SCE reduced the reactor coolant temperature at the steam generator inlet (T-hot) by about 11°F. SCE expects this will reduce stress corrosion cracking of the tubing initiating from the inside diameter of the tubing. An initial temperature reduction of about 4°F was completed in January 1998. Subsequently, plant modifications were effected to yield an additional reduction of 7°F.

Description of Tables and Appendices

Table 1 - Summary of the Planned Inspection Program for the Unit 2 Cycle 13 (U2C13) Refueling Outage

Table 2 - List of Nondestructive Examination (NDE) Techniques Utilized for Each Degradation Mechanism for the U2C13 Refueling Outage

Table 3 - Number of Tubes Repaired and Active Degradation Mechanisms Found During the U2C13 Refueling Outage

Table 4 - Summary of Results of In-Situ Pressure and Leak Testing for the U2C13 Refueling Outage

Table 5 - U2C13 Refueling Outage Tubes Plugged, Steam Generator E-088

Table 6 - U2C13 Refueling Outage Tubes Sleeved, Steam Generator E-088

Table 7 - U2C13 Refueling Outage Tubes Plugged, Steam Generator E-089

Table 8 - U2C13 Refueling Outage Tubes Sleeved, Steam Generator E-089

Appendix 1 - Steam Generator Reference Information

Appendix 2 - Legend for Appendices 3 and 4

Appendix 3 - Inspection Summary, Steam Generator E-088

Appendix 4 - Inspection Summary, Steam Generator E-089

TABLE 1 - Summary of the Planned Inspection Program for the Unit 2 Cycle 13 (U2C13) Refueling Outage

	Number of Tubes/Percentage of Tubes Steam Generator	
	E-088	E-089
Full length of tube with the bobbin probe (excluding sleeved regions and U-bends for Rows 1-3)	8577 / 100%	8533 / 100%
Hot leg expansion transition at the top-of-tubesheet with the Plus-Point Probe (to 16 inches below the expansion transition)	8577 / 100%	8533 / 100%
Cold leg expansion transition at the top-of-tubesheet with the Plus-Point Probe	2670 / 31%	2640 / 30%
U-bend regions of Rows 1, 2, and 3 with both mid and high frequency Plus-Point Probes	181 / 100%	174 / 100%
U-bend regions of Rows 4 through 10 at the U-bend with the mid frequency Plus-Point Probe	428 / 100%	432 / 100%
Plus-Point Probe examinations of Hot leg scallop bar supports with the above adjacent hot leg square bend and the below one support elevation of tubing freespan	81 / 20%	81 / 20%
Plus-Point Probe examinations of tube support intersections with dents greater than, or equal to, 2 volts	2676 / 100%	1858 / 100%
Plus-Point Probe examination of dings greater than, or equal to, 4 volts	349 / 100%	325 / 100%
Plus-Point Probe examination of all tube support intersections with quantified wear indications by the bobbin probe	573 / 100%	661 / 100%
Full length of sleeves with the Plus-Point Probe	252 / 100%	146 / 100%

TABLE 2 – List of Nondestructive Examination (NDE) Techniques Utilized for Each Degradation Mechanism for the U2C13 Refueling Outage

Indication Orientation/Location	Probe Type for Detection	Probe Type for Characterization
Axially oriented ID (initiated on the inside-diameter of the tubing wall) indications at tube support locations	Bobbin Plus-Point (Note 1)	Plus-Point Plus-Point
Axially oriented OD (initiated on the outside-diameter of the tubing wall) indications at tube support locations	Bobbin Plus-Point (Note 1)	Plus-Point Plus-Point
Axially oriented OD indications not associated with a tube support (freespan)	Bobbin	Plus-Point
Circumferentially oriented ID indications near or below the expansion transition at the top of the hot leg tubesheet	Plus-Point	Plus-Point
Circumferentially oriented OD indications near the expansion transition at the top of the hot leg tubesheet	Plus-Point	Plus-Point
Axially oriented indications in the sludge pile region near the top of the hot leg tubesheet	Plus-Point	Plus-Point
Axially oriented ID indications near or below the expansion transition at the top of the hot leg tubesheet	Plus-Point	Plus-Point
Indications of wear at tube support locations	Bobbin	Plus-Point
Volumetric indications	Bobbin or Plus-Point	Plus-Point
Miscellaneous preventive plugging	Bobbin or Plus-Point	Plus-Point

Note 1: Plus-Point technique is used at dents with greater than or equal to two volts.

TABLE 3 – Number of Tubes Repaired and Active Degradation Mechanisms Found During the U2C13 Refueling Outage

	Indication Orientation/Location	Steam Generator E-088	Steam Generator E-089
1	Tubes with axially oriented ID (initiated on the inside-diameter of the tubing wall) indications at tube support locations (ID Axial @ Support)	5	0
2	Tubes with axially oriented OD (initiated on the outside-diameter of the tubing wall) indications at tube support locations (OD Axial @ Support)	30	34
3	Tubes with axially oriented OD indications not associated with a tube support (freespan) (OD Axial @ Freespan)	19	23
4	Tubes with circumferentially oriented ID indications near the expansion transition at the top of the hot leg tubesheet (ID Circ @ TSH)	29	11
5	Tubes with circumferentially oriented OD indications near the expansion transition at the top of the hot leg tubesheet (OD Circ @ TSH)	15	15
6	Tubes with axially oriented OD indications in the sludge pile region near the top of the hot leg tubesheet (OD Axial @ Sludge Pile TSH)	15	16
7	Tubes with axially oriented OD indications near the expansion transition at the top of the hot leg tubesheet (OD Axial @ TSH)	1	1
8	Tubes with axially oriented ID indications near the expansion transition at the top of the hot leg tubesheet (ID Axial @ TSH)	2	0
9	Tubes with axially oriented ID indications below the inlet top-of-tubesheet (ID Axial below TSH)	45	32
10	Tubes with circumferentially oriented ID indications below the inlet top-of-tubesheet (ID Circ below TSH)	56	27
11	Tubes with indications of wear at tube support locations (Wear @ Support)	51	31
12	Sleeved Tubes with obstructions in the sleeved area (OBS @ Sleeve)	7	3
13	Tubes with Data Quality/ALARA complications (Data Quality @ Miscellaneous)	4	1
	Total	279	194

TABLE 4 – Summary of Results of In-Situ Pressure and Leak Testing for the U2C13 Refueling Outage

S/G 88 March 2004

TUBE AND EDDY CURRENT INFORMATION									IN-SITU TEST RESULTS			
REGION	TUBE INFORMATION			PLUS-POINT DATA					GPM @ NOPD	GPM @ MSLB	GPM @ NOPD POST MSLB	PRESSURE 3xNOPD
	ROW	COL	LOCATION	CA	VOLTS	Max. Depth (%)	PDA (%)	ORIENTATION				
TUBESHEET	7	135	TSH - 8.60	325	6.78	100	84	ID CIRC	0	0	0	0
TUBESHEET	18	134	TSH - 9.78	172	2.3	100	44	ID CIRC	0	0	0	0

S/G 89 March 2004

TUBE AND EDDY CURRENT INFORMATION									IN-SITU TEST RESULTS			
REGION	TUBE INFORMATION			PLUS-POINT DATA					GPM @ NOPD	GPM @ MSLB	GPM @ NOPD POST MSLB	PRESSURE 3xNOPD
	ROW	COL	LOCATION	CA	VOLTS	Max. Depth (%)	PDA (%)	ORIENTATION				
TUBESHEET	39	127	TSH - 9.4	189	13.43	96	49	ID CIRC	0	0	0	0

NOTES:

GPM = Gallons per Minute
NOPD = Normal Operation Pressure Differential
MSLB = Main Steam Line Break Pressure Differential
CA = Crack angle, the circumferential extent of a circumferential crack, degrees.
ID = Degradation initiated on the inside diameter of the tubing
PDA = Percent degraded area

TABLE 5 – SONGS U2C13 Refueling Outage Tubes Plugged
STEAM GENERATOR E-088

Row	Column	Reason for Plugging Tube (per Table 3)
14	12	(OD Axial @ Support)
38	12	(OD Axial @ Freespan)
39	13	(OD Axial @ Support)
13	23	(ID Axial below TSH)
72	24	(OD Axial @ Support)
37	25	(ID Axial below TSH)
76	26	(OD Axial @ Support)
79	27	(OD Axial @ Support)
98	30	(OD Axial @ Support)
34	32	(ID Circ below TSH)
94	32	(OD Axial @ Support)
59	33	(ID Axial below TSH)
95	33	(OD Axial @ Support)
16	34	(OD Axial @ Freespan)
37	35	(ID Circ below TSH)
8	36	(OBS @ Sleeve)
19	39	(OBS @ Sleeve)
71	39	(OD Axial @ Support)
4	40	(OD Axial @ Support)
34	40	(ID Circ below TSH)
28	42	(ID Axial below TSH)
65	47	(ID Circ below TSH)
24	48	(OBS @ Sleeve)
117	49	(OD Axial @ Freespan)
70	50	(OD Axial @ Freespan)
21	51	(ID Circ below TSH)
25	51	(ID Circ below TSH)
6	52	(OD Axial @ Support)
126	52	(ID Circ below TSH)
49	53	(OD Axial @ Support)
65	53	(ID Circ below TSH)
67	53	(ID Circ below TSH)
4	54	(ID Circ below TSH)

TABLE 5 (CONT.) – SONGS U2C13 Refueling Outage Tubes Plugged
STEAM GENERATOR E-088

Row	Column	Reason for Plugging Tube (per Table 3)
12	54	(ID Circ below TSH)
5	55	(OD Axial @ Support)
75	55	(OD Axial @ Freespan)
93	55	(OD Axial @ Support)
14	56	(ID Axial @ Support)
98	56	(ID Circ below TSH)
25	57	(ID Circ below TSH)
87	59	(ID Circ below TSH)
18	60	(ID Axial below TSH)
44	60	(ID Circ below TSH)
76	62	(ID Axial @ Support)
126	62	(Wear @ Support)
1	63	(OD Axial @ Support)
140	66	(Wear @ Support)
30	68	(OBS @ Sleeve)
33	71	(Wear @ Support)
49	71	(Wear @ Support)
34	72	(Wear @ Support)
128	72	(OD Axial @ Support)
142	72	(Wear @ Support)
49	73	(ID Axial below TSH)
73	73	(Wear @ Support)
143	73	(Wear @ Support)
38	74	(Wear @ Support)
144	74	(Wear @ Support)
43	75	(ID Axial below TSH)
45	75	(Wear @ Support)
46	76	(Wear @ Support)
50	76	(Wear @ Support)
51	77	(Wear @ Support)
49	79	(Wear @ Support)
141	79	(Wear @ Support)
129	81	(OD Axial @ Support)

TABLE 5 (CONT.) – SONGS U2C13 Refueling Outage Tubes Plugged
STEAM GENERATOR E-088

Row	Column	Reason for Plugging Tube (per Table 3)
135	81	(OD Axial @ Support)
141	81	(OD Axial @ Freespan)
145	81	(Wear @ Support)
82	82	(ID Circ below TSH)
142	82	(Wear @ Support)
144	82	(Wear @ Support)
55	83	(Wear @ Support)
87	83	(ID Circ below TSH)
125	83	(Wear @ Support)
135	83	(OD Axial @ Support)
145	83	(Wear @ Support)
58	84	(Wear @ Support)
82	84	(ID Circ below TSH)
146	84	(Wear @ Support)
57	85	(Wear @ Support)
59	85	(Wear @ Support)
65	85	(Wear @ Support)
71	85	(Wear @ Support)
58	86	(Wear @ Support)
86	86	(OBS @ Sleeve)
57	87	(Wear @ Support)
59	87	(ID Axial below TSH)
63	87	(Wear @ Support)
72	88	(Wear @ Support)
144	88	(Wear @ Support)
55	89	(Wear @ Support)
57	89	(Wear @ Support)
52	90	(Wear @ Support)
129	93	(OD Axial @ Support)
147	93	(Wear @ Support)
52	94	(Wear @ Support)
54	94	(ID Axial @ Support)
129	95	(OD Axial @ Freespan)

TABLE 5 (CONT.) – SONGS U2C13 Refueling Outage Tubes Plugged
STEAM GENERATOR E-088

Row	Column	Reason for Plugging Tube (per Table 3)
52	96	(Wear @ Support)
133	97	(OD Axial @ Freespan)
46	98	(Wear @ Support)
48	98	(Wear @ Support)
51	99	(Wear @ Support)
146	100	(Wear @ Support)
36	102	(Wear @ Support)
38	102	(Wear @ Support)
42	102	(Data Quality @ Miscellaneous)
36	104	(Wear @ Support)
46	104	(ID Circ below TSH)
41	105	(Data Quality @ Miscellaneous)
51	105	(ID Circ below TSH)
144	106	(Wear @ Support)
51	107	(ID Axial below TSH)
28	108	(ID Axial below TSH)
48	108	(OD Axial @ Support)
114	108	(OBS @ Sleeve)
97	109	(OD Axial @ Freespan)
46	110	(ID Circ below TSH)
64	110	(ID Axial below TSH)
119	111	(Wear @ Support)
123	111	(Wear @ Support)
23	113	(Data Quality @ Miscellaneous)
29	113	(ID Axial @ Support)
65	113	(ID Circ below TSH)
71	113	(ID Circ below TSH)
22	114	(ID Axial @ Support)
28	114	(OBS @ Sleeve)
68	114	(ID Circ below TSH)
65	115	(ID Circ below TSH)
67	115	(OD Axial @ Freespan)
9	119	(OD Axial @ Support)

TABLE 5 (CONT.) – SONGS U2C13 Refueling Outage Tubes Plugged
STEAM GENERATOR E-088

Row	Column	Reason for Plugging Tube (per Table 3)
74	120	(ID Circ below TSH)
80	120	(OD Axial @ Freespan)
15	121	(OD Axial @ Support)
19	121	(OD Axial @ Support)
25	121	(ID Circ below TSH)
45	121	(ID Circ below TSH)
16	122	(OD Axial @ Freespan)
34	122	(ID Circ below TSH)
34	124	(ID Axial below TSH)
15	125	(OD Axial @ Support)
31	125	(ID Circ below TSH)
69	127	(ID Axial below TSH)
38	128	(OD Axial @ Freespan)
67	129	(OD Axial @ Support)
1	131	(Data Quality @ Miscellaneous)
37	133	(ID Circ below TSH)
18	134	(ID Circ below TSH)
60	134	(ID Circ below TSH)
7	135	(ID Circ below TSH)
18	136	(ID Circ below TSH)
17	137	(OD Axial @ Support)
75	139	(Wear @ Support)
26	140	(ID Circ below TSH)
15	143	(OD Axial @ Freespan)
6	144	(OD Axial @ Support)
74	146	(Wear @ Support)
69	149	(OD Axial @ Freespan)
45	151	(OD Axial @ Freespan)
16	152	(OD Axial @ Freespan)
71	155	(OD Axial @ Support)
72	160	(OD Axial @ Support)
4	164	(ID Axial @ TSH)
25	165	(OD Axial @ Freespan)
26	168	(OD Axial @ Freespan)

TABLE 6 – SONGS U2C13 Refueling Outage Tubes Sleeved
STEAM GENERATOR E-088

Row	Column	Reason for Sleeving Tube (per Table 3)
11	35	(ID Axial below TSH)
23	35	(ID Circ @ TSH)
38	36	(ID Circ @ TSH)
25	39	(ID Axial below TSH)
25	41	(OD Circ @ TSH)
18	42	(ID Circ below TSH)
44	42	(ID Axial below TSH)
7	43	(ID Axial below TSH)
16	54	(ID Circ below TSH)
18	54	(ID Circ below TSH)
32	54	(ID Circ below TSH)
27	55	(ID Circ below TSH)
57	55	(ID Circ below TSH)
10	56	(ID Circ below TSH)
16	56	(ID Circ @ TSH)
30	56	(ID Circ below TSH)
46	56	(OD Circ @ TSH)
48	56	(OD Axial @ TSH)
64	56	(ID Axial below TSH)
13	57	(ID Circ below TSH)
23	57	(ID Circ @ TSH)
67	57	(ID Circ @ TSH)
83	59	(ID Circ @ TSH)
18	62	(ID Axial below TSH)
20	62	(OD Circ @ TSH)
11	63	(ID Axial below TSH)
43	63	(ID Axial below TSH)
83	63	(ID Circ @ TSH)
43	65	(ID Axial below TSH)
47	65	(ID Axial below TSH)
59	65	(OD Axial @ Sludge Pile TSH)
64	66	(ID Axial below TSH)

TABLE 6 (CONT.) – SONGS U2C13 Refueling Outage Tubes Sleeved
STEAM GENERATOR E-088

Row	Column	Reason for Sleeving Tube (per Table 3)
43	67	(ID Axial below TSH)
48	68	(OD Axial @ Sludge Pile TSH)
78	68	(ID Circ @ TSH)
47	69	(ID Axial below TSH)
48	70	(OD Axial @ Sludge Pile TSH)
53	71	(OD Axial @ Sludge Pile TSH)
56	72	(OD Circ @ TSH)
74	74	(OD Circ @ TSH)
99	75	(ID Circ @ TSH)
53	77	(ID Axial below TSH)
55	77	(OD Axial @ Sludge Pile TSH)
61	77	(OD Axial @ Sludge Pile TSH)
64	78	(OD Axial @ Sludge Pile TSH)
80	78	(OD Circ @ TSH)
53	79	(ID Axial below TSH)
78	80	(ID Circ @ TSH)
63	81	(ID Axial below TSH)
57	83	(OD Axial @ Sludge Pile TSH)
70	84	(OD Axial @ Sludge Pile TSH)
80	86	(ID Circ @ TSH)
59	91	(OD Axial @ Sludge Pile TSH)
63	91	(ID Axial below TSH)
67	91	(OD Circ @ TSH)
77	91	(OD Circ @ TSH)
60	92	(ID Axial below TSH)
68	92	(OD Axial @ Sludge Pile TSH)
68	94	(OD Axial @ Sludge Pile TSH)
53	95	(ID Axial below TSH)
85	95	(ID Circ below TSH)
73	97	(OD Axial @ Sludge Pile TSH)
75	97	(OD Axial @ Sludge Pile TSH)
91	97	(ID Circ @ TSH)
61	99	(OD Circ @ TSH)
89	99	(ID Circ @ TSH)

TABLE 6 (CONT.) – SONGS U2C13 Refueling Outage Tubes Sleeved
STEAM GENERATOR E-088

Row	Column	Reason for Sleeving Tube (per Table 3)
51	101	(ID Axial below TSH)
69	101	(ID Circ @ TSH)
49	103	(ID Axial below TSH)
57	103	(ID Axial below TSH)
67	103	(ID Circ @ TSH)
42	104	(ID Axial below TSH)
80	104	(ID Circ @ TSH)
82	104	(ID Circ @ TSH)
47	105	(ID Axial below TSH)
30	108	(ID Axial below TSH)
70	108	(ID Circ @ TSH)
55	111	(OD Axial @ Sludge Pile TSH)
42	112	(ID Axial @ TSH)
50	112	(ID Circ @ TSH)
17	113	(ID Circ below TSH)
43	113	(ID Circ @ TSH)
44	114	(ID Circ below TSH)
46	114	(ID Circ @ TSH)
52	114	(ID Axial below TSH)
82	114	(ID Circ @ TSH)
44	116	(ID Axial below TSH)
60	116	(ID Circ @ TSH)
28	118	(ID Axial below TSH)
30	118	(ID Circ @ TSH)
13	119	(ID Circ @ TSH)
57	119	(ID Circ @ TSH)
75	119	(ID Axial below TSH)
22	120	(ID Axial below TSH)
7	121	(ID Circ below TSH)
13	121	(ID Circ @ TSH)
83	121	(ID Circ below TSH)
42	122	(ID Axial below TSH)
48	122	(OD Circ @ TSH)

TABLE 6 (CONT.) – SONGS U2C13 Refueling Outage Tubes Sleeved
STEAM GENERATOR E-088

Row	Column	Reason for Sleeving Tube (per Table 3)
19	123	(ID Circ below TSH)
60	126	(ID Circ @ TSH)
25	127	(ID Circ below TSH)
27	127	(OD Circ @ TSH)
47	127	(ID Circ below TSH)
39	131	(ID Circ below TSH)
10	132	(ID Circ below TSH)
18	138	(ID Circ @ TSH)
7	139	(ID Circ below TSH)
12	144	(ID Axial below TSH)
37	147	(OD Circ @ TSH)
35	149	(OD Circ @ TSH)
65	149	(OD Circ @ TSH)
57	151	(OD Circ @ TSH)

TABLE 7 – SONGS U2C13 Refueling Outage Tubes Plugged
STEAM GENERATOR E-089

Row	Column	Reason for Plugging Tube (per Table 3)
19	9	(OD Axial @ Support)
4	10	(ID Axial below TSH)
12	10	(OD Axial @ Support)
20	10	(OD Axial @ Freespan)
18	14	(OD Axial @ Support)
48	14	(OD Axial @ Freespan)
13	15	(OD Axial @ Support)
47	15	(OD Axial @ Support)
75	17	(OD Axial @ Support)
67	19	(OD Axial @ Freespan)
68	20	(OD Axial @ Support)
68	22	(OD Axial @ Support)
93	31	(OD Axial @ Freespan)
114	34	(ID Axial below TSH)
9	35	(ID Circ below TSH)
100	36	(OD Axial @ Support)
15	37	(ID Circ below TSH)
112	38	(OD Axial @ Freespan)
103	39	(OD Axial @ Freespan)
36	40	(OD Axial @ Freespan)
38	40	(ID Circ below TSH)
47	41	(ID Axial below TSH)
47	45	(ID Axial below TSH)
65	47	(OD Axial @ Support)
111	47	(OD Axial @ Support)
9	49	(OD Axial @ Support)
110	50	(OD Axial @ Support)
120	50	(OD Axial @ Support)
47	51	(OD Circ @ TSH)
51	51	(ID Circ @ TSH)
62	52	(OD Axial @ Freespan)
1	55	(OD Axial @ Support)
114	56	(OD Axial @ Support)
23	57	(OD Axial @ Support)
22	58	(OD Axial @ Support)
39	59	(OD Axial @ Sludge Pile TSH)
49	59	(OD Axial @ Sludge Pile TSH)

TABLE 7 (CONT.) – SONGS U2C13 Refueling Outage Tubes Plugged
STEAM GENERATOR E-089

Row	Column	Reason for Plugging Tube (per Table 3)
24	60	(ID Circ @ TSH)
51	61	(OD Axial @ Support)
81	61	(OD Axial @ Freespan)
22	62	(ID Axial below TSH)
9	63	(ID Axial below TSH)
78	64	(ID Axial below TSH)
22	66	(ID Circ below TSH)
78	66	(OD Axial @ Freespan)
39	69	(ID Circ below TSH)
71	71	(ID Axial below TSH)
87	71	(OD Axial @ Support)
74	72	(OBS @ Sleeve)
118	72	(OD Axial @ Freespan)
39	73	(ID Axial below TSH)
45	73	(ID Axial below TSH)
144	74	(Wear @ Support)
37	75	(Wear @ Support)
145	75	(Wear @ Support)
62	76	(OD Axial @ Freespan)
82	76	(ID Circ @ TSH)
114	76	(OBS @ Sleeve)
138	76	(Wear @ Support)
47	77	(Wear @ Support)
49	77	(OD Axial @ Support)
95	77	(ID Axial below TSH)
74	78	(OD Axial @ Sludge Pile TSH)
43	79	(Wear @ Support)
63	79	(Wear @ Support)
75	79	(Wear @ Support)
131	79	(OD Axial @ Support)
50	82	(Wear @ Support)
56	82	(Wear @ Support)
53	83	(Wear @ Support)
57	83	(Wear @ Support)
63	83	(Wear @ Support)
58	86	(Wear @ Support)

TABLE 7 (CONT.) – SONGS U2C13 Refueling Outage Tubes Plugged
STEAM GENERATOR E-089

Row	Column	Reason for Plugging Tube (per Table 3)
138	86	(OD Axial @ Support)
142	86	(ID Circ below TSH)
146	86	(Wear @ Support)
89	87	(ID Axial below TSH)
136	88	(OD Axial @ Support)
65	89	(Wear @ Support)
58	90	(Wear @ Support)
63	91	(OBS @ Sleeve)
146	92	(Wear @ Support)
54	94	(Wear @ Support)
56	94	(Wear @ Support)
62	94	(Wear @ Support)
146	94	(Wear @ Support)
51	95	(Wear @ Support)
51	97	(Wear @ Support)
146	98	(OD Axial @ Freespan)
49	99	(Wear @ Support)
44	100	(Wear @ Support)
45	101	(Wear @ Support)
47	101	(Wear @ Support)
135	101	(OD Axial @ Support)
25	109	(ID Axial below TSH)
33	109	(Data Quality @ Miscellaneous)
42	110	(Wear @ Support)
108	110	(ID Axial below TSH)
138	110	(ID Axial below TSH)
27	111	(OD Circ @ TSH)
75	111	(Wear @ Support)
89	111	(ID Axial below TSH)
82	112	(ID Axial below TSH)
126	112	(OD Axial @ Support)
21	113	(OD Axial @ Support)
71	113	(OD Axial @ Freespan)
85	113	(ID Axial below TSH)
5	115	(ID Circ below TSH)
127	115	(OD Axial @ Freespan)

TABLE 7 (CONT.) – SONGS U2C13 Refueling Outage Tubes Plugged
STEAM GENERATOR E-089

Row	Column	Reason for Plugging Tube (per Table 3)
58	116	(OD Axial @ Support)
90	116	(OD Axial @ Freespan)
2	118	(ID Circ below TSH)
18	118	(ID Circ below TSH)
45	119	(OD Axial @ Freespan)
112	120	(ID Axial below TSH)
102	122	(OD Axial @ Support)
14	124	(ID Axial below TSH)
42	124	(ID Axial below TSH)
4	126	(ID Circ below TSH)
9	127	(ID Circ below TSH)
11	127	(OD Axial @ Support)
29	127	(ID Circ below TSH)
39	127	(ID Circ below TSH)
18	128	(ID Circ below TSH)
112	128	(OD Axial @ Support)
46	130	(ID Axial below TSH)
9	131	(ID Circ below TSH)
81	131	(ID Circ below TSH)
46	132	(OD Axial @ Freespan)
46	136	(OD Axial @ Sludge Pile TSH)
75	139	(ID Axial below TSH)
13	141	(OD Axial @ Freespan)
95	141	(ID Axial below TSH)
66	144	(Wear @ Support)
65	151	(ID Axial below TSH)
24	152	(ID Circ @ TSH)
11	159	(OD Axial @ Support)
26	162	(OD Axial @ Support)
11	163	(OD Axial @ Freespan)
22	164	(OD Axial @ Freespan)
11	165	(OD Axial @ Support)
14	166	(OD Axial @ Freespan)
19	167	(OD Axial @ Freespan)

TABLE 8 – SONGS U2C13 Refueling Outage Tubes Sleeved
STEAM GENERATOR E-089

Row	Column	Reason for Sleeving Tube (per Table 3)
56	38	(ID Circ @ TSH)
28	42	(ID Circ @ TSH)
46	44	(ID Axial below TSH)
45	47	(ID Axial below TSH)
16	58	(ID Circ below TSH)
37	59	(OD Circ @ TSH)
20	60	(OD Circ @ TSH)
38	60	(OD Axial @ Sludge Pile TSH)
35	61	(OD Circ @ TSH)
43	65	(OD Circ @ TSH)
64	66	(OD Axial @ Sludge Pile TSH)
39	67	(OD Axial @ TSH)
45	67	(ID Axial below TSH)
67	71	(OD Axial @ Sludge Pile TSH)
46	72	(ID Axial below TSH)
75	73	(OD Axial @ Sludge Pile TSH)
48	74	(OD Circ @ TSH)
78	74	(ID Circ @ TSH)
50	78	(OD Axial @ Sludge Pile TSH)
54	78	(OD Axial @ Sludge Pile TSH)
68	84	(OD Axial @ Sludge Pile TSH)
89	85	(OD Circ @ TSH)
64	88	(OD Circ @ TSH
95	93	(ID Circ below TSH)
83	95	(OD Circ @ TSH)
101	97	(OD Axial @ Sludge Pile TSH)
62	100	(OD Circ @ TSH)
57	103	(ID Circ @ TSH)
106	104	(OD Axial @ Sludge Pile TSH)
116	106	(ID Axial below TSH)
51	107	(OD Circ @ TSH)
97	107	(ID Axial below TSH)
48	108	(OD Axial @ Sludge Pile TSH)
47	109	(OD Axial @ Sludge Pile TSH)
26	110	(OD Axial @ Sludge Pile TSH)
8	114	(ID Circ @ TSH)

TABLE 8 (CONT.) – SONGS U2C13 Refueling Outage Tubes Sleeved
STEAM GENERATOR E-089

Row	Column	Reason for Sleeving Tube (per Table 3)
18	114	(OD Circ @ TSH)
35	115	(OD Circ @ TSH)
77	115	(ID Circ below TSH)
38	116	(ID Axial below TSH)
12	120	(ID Circ below TSH)
53	125	(OD Circ @ TSH)
81	125	(ID Circ @ TSH)
36	126	(ID Circ below TSH)
33	127	(ID Circ below TSH)
36	132	(ID Circ below TSH)
36	134	(ID Circ below TSH)
12	138	(ID Circ below TSH)
10	140	(ID Circ below TSH)
9	147	(ID Circ below TSH)
27	147	(ID Circ @ TSH)

Appendix 1

Steam Generator Reference Information

Steam Generator
CE Model 3410 Tube Support Drawing

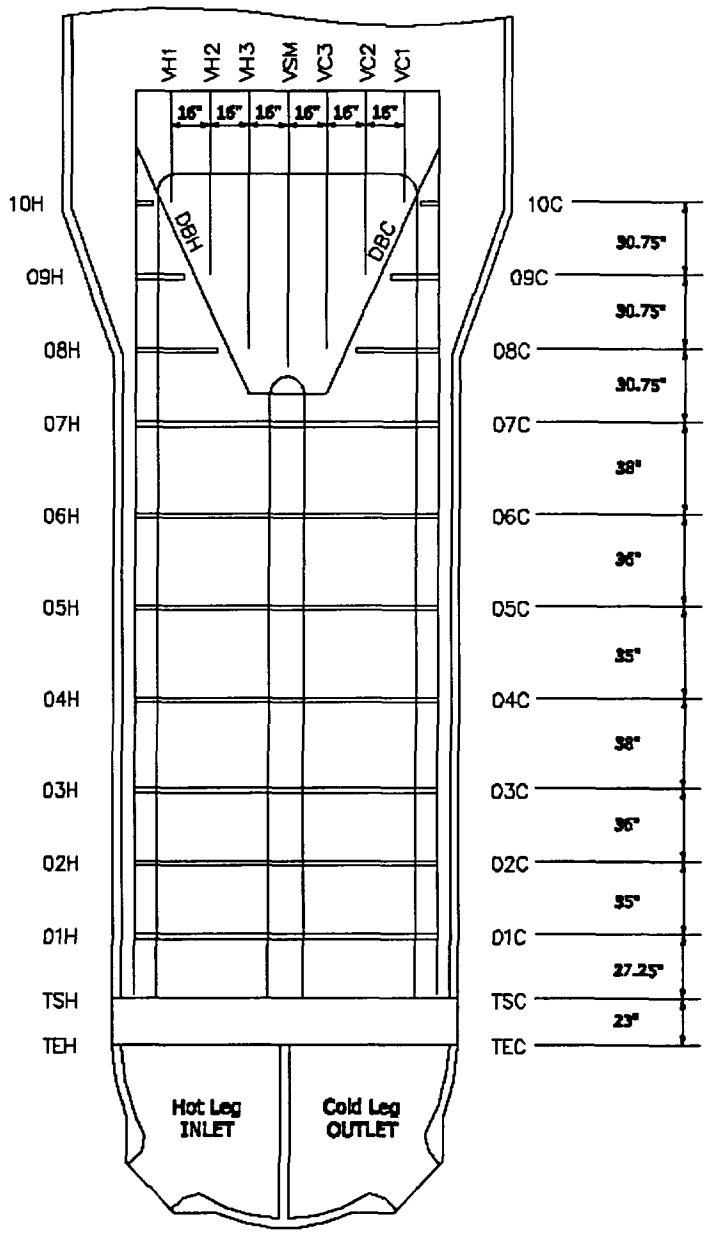

STEAM GENERATOR TUBE SUPPORT INTERSECTIONS ABOVE THE 7TH (FULL) EGGCRATE SUPPORT

SUPPORT INTERSECTIONS															
ROW	STRUCTURES														
122-147	08H	09H	10H	DBH	VH1	VH2	VH3	VSM	VC3	VC2	VC1	DBC	10C	09C	08C
120-121*	08H	09H	10H	DBH	VH1	VH2	VH3	VSM	VC3	VC2	VC1	DBC	10C	09C	08C
115-119	08H	09H		DBH	VH1	VH2	VH3	VSM	VC3	VC2	VC1	DBC		09C	08C
86-114	08H	09H		DBH		VH2	VH3	VSM	VC3	VC2		DBC		09C	08C
84-85*	08H	09H		DBH		VH2	VH3	VSM	VC3	VC2		DBC		09C	08C
83	08H			DBH		VH2	VH3	VSM	VC3	VC2		DBC			08C
51-82	08H			DBH			VH3	VSM	VC3			DBC			08C
49-50*	08H			DBH				VSM				DBC			08C
19-48				DBH				VSM				DBC			
1-18				DBH								DBC			

* Indicates those rows adjacent to scallop bars

SOUTHERN CALIFORNIA EDISON, SAN ONOFRE

CE MODEL 3410 STEAM GENERATOR

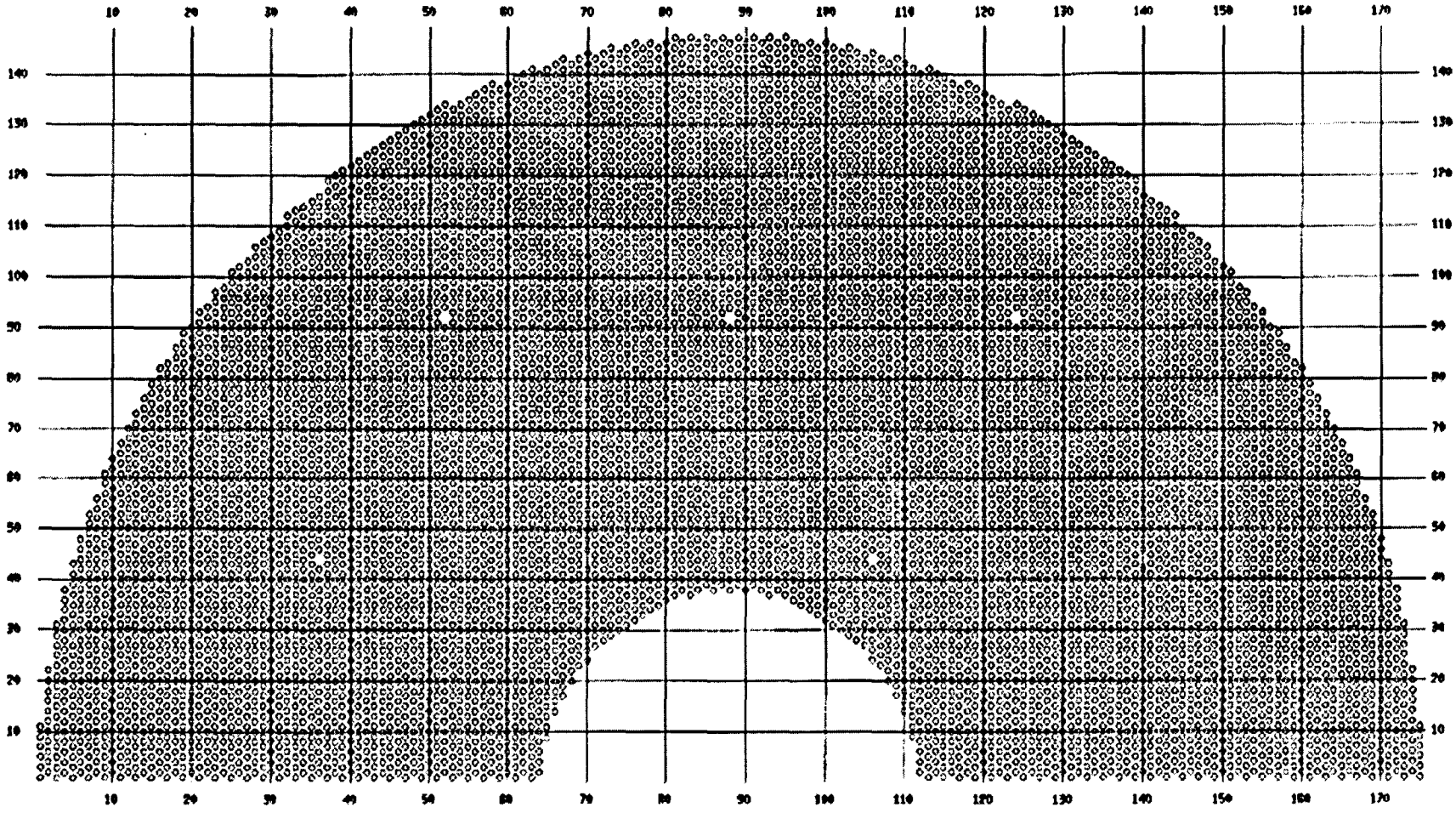

Appendix 2

Legend for Appendices 3 and 4

List of Abbreviations and Format Used to Describe Indications from Rotating Probe Testing

"I-Code" Abbreviations	Explanation of the Abbreviations
SCI	Single Circumferential Indication
MCI	Multiple Circumferential Indications
SAI	Single Axial Indication
MAI	Multiple Axial Indications
MMI	Mixed Mode Indications
SVI	Single Volumetric Indication (i.e. no special axial or circumferential aspect)
MVI	Multiple Volumetric Indications (i.e. no special axial or circumferential aspect)

Format

In Appendices 3 and 4, a single line of data is associated with each individual rotating probe indication. Below is a descriptive example of the format.

ROW	COL	VOLTS	DEG	CHN	IND	%TW	LOCATION	EXT	EXT	UTIL 1	UTIL 2
4	12	+P VOLTS	+P DEG	CH#	CODE	%	LOCATION	EXT	EXT	PAN VOLTS	INCHES

1. All "I-Code" indications require a single line entry. The example above displays the form of a Resolution Report line. The VOLTS field contains the Plus-Point P-to-P voltage of the largest, most representative response. The DEG field contains the corresponding phase angle. The CHN field contains the reporting channel (i.e. the appropriate 300kHz Plus-Point channel). The IND field contains the appropriate 3-letter code (see list above). The %TW field indicates the percent wall loss for wear indications. The LOCATION field contains the abbreviation for the referenced landmark and the (FROM-TO) distance for the indication. The EXT fields contain the landmarks of the beginning and end of the test extent. The UTIL 1 field contains the 300kHz pancake P-to-P voltage of the largest, most representative response. The UTIL 2 field was used to document the actual inspection distance below the hot leg top-of-tubesheet or Sleeve Bottom Hot for applicable inspections. Exceptions to this general guidance are provided in paragraphs 2 through 4 below.

2. For axial indications of extended length, the location should be ranged (FROM-TO) in the LOCATION field. If the range of such an indication includes any part of a support structure, it should be references from that landmark.

3. For "I-Code" indications which have both axial and circumferential extent (i.e. SVI, MVI, and MMI), the location should be ranged in the LOCATION field (as above) and the UTIL 2 field should contain the circumferential length.

4. Some data lines contain a note abbreviation in the Util 1 column. These are the definitions of these abbreviations.
   LAR: Lead Analyst Reviewed
   LOCOK: Location Verification

Appendix 3

Inspection Summary

Steam Generator E-088

MAI, MCI, MMI, MVI, SAI, SCI, SVI, 0-100%

QUERY: rpc_icodes_and_0-100%twd

ROW	LINE	VOLTS	DEG	CHN	IND	%TW	LOCATION		EXT	EXT	UTIL 1	UTIL 2	CAL #	LEG	PROBE
1	63	0.34	119	2	SAI		DBC	-0.02	DBC	07C	0.26		149	COLD	560P2
		0.28	102	5	SAI		DBC	+0.15	07H	07C			85	COLD	5002P
4	40	0.53	87	2	SAI		07C	-0.45	07C	07C	0.52		134	COLD	580PP
4	54	2.50	33	P 1	MCI		TSH	-9.35	TSH	TSH	2.33	17.77	255	HOT	580PP
4	164	0.77	20	2	SAI		TSH	-0.16	TSH	TSH	0.00	18.61	177	HOT	580PP
5	55	0.37	131	2	SAI		06H	+0.48	06H	06H	0.14		255	HOT	580PP
6	52	0.32	75	2	SAI		07H	-0.53	07H	07H	0.38		256	HOT	580PP
6	144	0.29	84	2	SAI		07H	-0.35	07H	07H	0.23		271	HOT	580PP
6	168	0.24	128	P 5	TWD	15	04H	-0.75	04H	04H			223	HOT	580PP
7	43	0.59	22	2	SAI		TSH	-7.23	TSH	TSH	0.0	18.39	149	HOT	580PP
7	121	0.37	23	P 1	MCI		TSH	-3.47	TSH	TSH	0.17	18.48	170	HOT	580PP
7	135	5.73	39	P 1	MCI		TSH	-8.60	TSH	TSH	11.28	18.75	174	HOT	580PP
7	139	0.35	17	P 1	SCI		TSH	-5.48	TSH	TSH	0.14	18.50	174	HOT	580PP
9	119	0.21	112	2	SAI		05H	+0.24	05H	05H	0.00		240	HOT	580PP
9	123	0.35	144	P 2	TWD	17	05H	-0.36	TEH	TEC			20	COLD	600UL
		0.22	139	P 2	TWD	11	04H	-1.13	TEH	TEC			20	COLD	600UL
		0.40	144	P 2	TWD	19	04H	+0.90	TEH	TEC			20	COLD	600UL
10	56	1.06	26	P 1	SCI		TSH	-8.84	TSH	TSH	1.88	18.21	256	HOT	580PP
10	126	0.27	53	P 2	TWD	15	05H	+0.86	TEH	TEC			19	COLD	600UL
10	132	0.82	33	P 1	SCI		TSH	-7.68	TSH	TSH	1.51	21.00	329	HOT	580PP
11	35	0.45	21	2	SAI		TSH	-4.34	TSH	TSH	0.0	17.68	171	HOT	580PP
11	63	0.35	17	2	SAI		TSH	-0.85	TSH	TSH	0.00	19.35	238	HOT	580PP
12	54	4.53	51	P 1	SCI		TSH	-10.18	TSH	TSH	5.23	17.61	229	HOT	580PP
12	144	0.51	16	2	SAI		TSH	-2.03	TSH	TSH	0.46	18.70	189	HOT	580PP
13	9	0.43	63	P 2	TWD	17	05H	-0.12	TEC	TEH			1	HOT	600UL
		0.19	82	P 5	TWD	14	05H	-0.10	05H	05H			259	HOT	580PP
13	23	0.95	16	2	SAI		TSH	-12.09	TSH	TSH	1.90	17.41	168	HOT	580PP
13	57	0.44	21	P 1	SCI		TSH	-7.23	TSH	TSH	0.00	17.52	235	HOT	580PP
13	119	0.33	22	P 1	SCI		TSH	-0.13	TSH	TSH	0.11	17.53	162	HOT	580PP
13	121	0.33	21	P 1	SCI		TSH	-0.13	TSH	TSH	0.29	18.41	166	HOT	580PP
14	12	0.23	72	2	SAI		05H	-0.40	05H	05H	0.55		259	HOT	580PP
14	40	0.22	53	P 2	TWD	12	02H	-1.18	TEC	TEH			18	HOT	600UL
14	56	1.02	14	2	SAI		05H	+0.71	05H	05H	0.88		228	HOT	580PP
15	119	0.30	96	P 2	TWD	18	07C	-0.85	TEH	TEC			4	COLD	600UL
		0.16	114	P 5	TWD	12	07C	-0.90	07C	07C			139	COLD	580PP
15	121	0.26	102	2	SAI		05H	+0.66	05H	05H	0.52		244	HOT	580PP
15	125	0.14	82	2	SAI		04H	+0.93	04H	04H	0.00		245	HOT	580PP
15	143	0.21	113	2	SAI		01H	+16.82	01H	01H	0.10		220	HOT	580PP
		4.95	38	P 1	SCI		TSH	-10.48	TSH	TSH	5.83	18.50	189	HOT	580PP
16	20	0.21	134	P 3	TWD	11	DBC	+2.21	TEC	TEH			8	HOT	600UL
16	34	0.43	98	2	MAI		02H	+3.84 TO+7.59	02H	02H	.60		263	HOT	580PP

MAI, MCI, MMI, MVI, SAI, SCI, SVI, 0-100%

QUERY: rpc_icodes_and_0-100%twd.qry

ROW	LINE	VOLTS	DEG	CHN	IND	%TW	LOCATION		EXT	EXT	UTIL 1	UTIL 2	CAL #	LEG	PROBE
16	54	0.28	22	P 1	SCI		TSH	-7.49	TSH	TSH	0.23	17.44	229	HOT	580PP
16	56	0.25	24	P 1	SCI		TSH	-0.07	TSH	TSH	0.00	17.38	250	HOT	580PP
16	122	0.14	108	2	SAI		02H	-1.21	02H	02H	0.50		245	HOT	580PP
16	152	0.13	114	2	SAI		02H	+1.11	02H	02H	0.49		223	HOT	580PP
		0.15	84	2	SAI		02H	+1.31	02H	02H	0.30		223	HOT	580PP
17	113	0.43	21	P 1	MCI		TSH	-5.53	TSH	TSH	0.53	19.96	157	HOT	580PP
17	137	0.26	120	2	SAI		06H	+0.08	06H	06H	0.00		220	HOT	580PP
17	161	0.38	150	P 2	TWD	16	06H	+0.76	TEC	TEH			21	HOT	600UL
18	42	1.95	32	P 1	SCI		TSH	-7.18	TSH	TSH	2.34	18.74	175	HOT	580PP
18	44	0.29	103	P 3	TWD	12	DBH	-2.18	TEC	TEH			17	HOT	600UL
18	54	0.34	25	P 1	SCI		TSH	-2.06	TSH	TSH	0.00	17.68	228	HOT	580PP
18	60	0.57	24	P 1	SCI		TSH	-10.13	TSH	TSH	0.14	20.04	331	HOT	580PP
		0.56	14	2	SAI		TSH	-1.47	TSH	TSH	0.00		331	HOT	580PP
18	62	0.41	26	P 1	MCI		TSH	-6.78	TSH	TSH	0.00	17.79	235	HOT	580PP
		0.49	7	2	SAI		TSH	-1.80	TSH	TSH	0.00		235	HOT	580PP
		0.45	17	2	SAI		TSH	-1.14	TSH	TSH	0.00		235	HOT	580PP
		0.27	15	2	SAI		TSH	-0.99	TSH	TSH	0.00		235	HOT	580PP
18	134	2.18	40	P 1	SCI		TSH	-9.76	TSH	TSH	2.99	18.41	181	HOT	580PP
18	136	3.38	37	P 1	SCI		TSH	-12.11	TSH	TSH	4.35	18.48	181	HOT	580PP
18	138	0.26	27	P 1	SCI		TSH	-0.15	TSH	TSH	0.00	18.23	189	HOT	580PP
19	25	0.32	26	P 2	TWD	17	01H	-0.36	TEC	TEH			8	HOT	600UL
19	111	0.13	119	P 5	TWD	14	VSM	-0.90	VSM	DBC			170	COLD	560P2
		0.34	4	P 3	TWD	19	DBC	+2.25	TEH	TEC	LAR		6	COLD	600UL
19	121	0.39	131	2	SAI		05H	+0.00	05H	05H	0.52		244	HOT	580PP
19	123	0.37	18	P 1	SCI		TSH	-3.68	TSH	TSH	0.31	17.87	165	HOT	580PP
19	135	0.34	141	P 3	TWD	13	DBH	+2.10	TEC	TEH			11	HOT	600UL
19	159	0.23	61	P 2	TWD	11	04H	+0.84	TEC	TEH			21	HOT	600UL
20	62	0.19	57	P 1	SCI		TSH	-0.02	TSH	TSH	0.0	18.18	234	HOT	580PP
20	68	0.30	39	P 3	TWD	17	DBH	-1.61	TEH	TEC			32	COLD	600UL
		0.37	98	P 5	TWD	25	DBH	-1.94	DBH	DBH	AIC		147	COLD	560P2
20	108	0.18	44	P 3	TWD	8	DBH	-1.55	TEH	TEC			8	COLD	600UL
		0.37	93	P 5	TWD	18	DBH	-1.77	07H	DBH			377	HOT	560P2
		0.34	88	P 5	TWD	25	DBH	-1.69	DBH	DBH			170	COLD	560P2
21	51	0.67	32	P 1	SCI		TSH	-13.13	TSH	TSH	0.43	20.41	222	HOT	580PP
21	61	0.29	145	P 3	TWD	15	DBH	+1.97	TEH	TEC			29	COLD	600UL
22	114	1.22	13	2	SAI		06H	+0.61	05H	06H	0.00		346	HOT	500P2
22	120	0.53	16	2	SAI		TSH	-2.06	TSH	TSH	0.70	17.50	162	HOT	580PP
23	35	0.58	24	P 1	SCI		TSH	-0.11	TSH	TSH	0.0	17.94	171	HOT	580PP
23	57	0.44	30	P 1	SCI		TSH	-0.14	TSH	TSH	0.86	18.30	232	HOT	580PP
23	109	0.27	106	P 2	TWD	14	VSM	+0.74	TEH	TEC			7	COLD	600UL
		0.22	140	P 5	TWD	20	VSM	+0.99	VSM	VSM			170	COLD	560P2
23	125	0.30	76	P 2	TWD	16	07H	-0.21	TEH	TEC			3	COLD	600UL
24	14	0.24	73	P 2	TWD	13	VSM	+0.99	TEC	TEH			2	HOT	600UL
		0.23	92	P 5	TWD	14	VSM	+0.93	VSM	VSM			144	COLD	560P2

MAI, MCI, MMI, MVI, SAI, SCI, SVI, 0-100%

QUERY: rpc_icodes_and_0-100%twd.qry

ROW	LINE	VOLTS	DEG	CHN	IND	%TW	LOCATION		EXT	EXT	UTIL 1	UTIL 2	CAL #	LEG	PROBE
24	68	0.38	45	P 2	TWD	19	06H	+0.88	TEH	TEC			32	COLD	600UL
25	39	0.37	11	2	SAI		TSH	-6.56	TSH	TSH	0.46	18.37	176	HOT	580PP
25	41	0.19	121	P 1	MCI		TSH	-0.03	TSH	TSH	0.40	18.47	176	HOT	580PP
25	51	2.02	38	P 1	SCI		TSH	-9.88	TSH	TSH	2.83	20.53	222	HOT	580PP
25	57	0.24	15	P 1	SCI		TSH	-9.83	TSH	TSH	0.17	17.94	233	HOT	580PP
25	121	0.80	27	P 1	SCI		TSH	-10.70	TSH	TSH	0.81	18.55	165	HOT	580PP
		0.68	30	P 1	SCI		TSH	-10.25	TSH	TSH	0.64		165	HOT	580PP
25	127	0.60	21	P 1	SCI		TSH	-6.20	TSH	TSH	0.24	18.46	170	HOT	580PP
25	165	0.18	75	2	SAI		05H	+12.15	05H	05H	0.44		223	HOT	580PP
26	140	1.97	36	P 1	SCI		TSH	-13.39	TSH	TSH	1.87	18.21	189	HOT	580PP
		0.80	30	P 1	SCI		TSH	-7.93	TSH	TSH	0.63		189	HOT	580PP
		0.51	29	P 1	SCI		TSH	-5.12	TSH	TSH	0.57		189	HOT	580PP
26	146	0.22	126	P 3	TWD	15	DBH	+1.92	TEC	TEH			16	HOT	600UL
26	168	0.12	82	2	SAI		06H	+13.09	06H	06H	0.35		223	HOT	580PP
27	55	0.38	17	P 1	SCI		TSH	-2.00	TSH	TSH	0.40	18.43	228	HOT	580PP
27	127	0.54	66	P 1	SCI		TSH	-0.07	TSH	TSH	0.47	17.86	169	HOT	580PP
27	145	0.24	160	P 3	TWD	17	DBH	+1.55	TEC	TEH			16	HOT	600UL
28	36	0.26	76	P 2	TWD	12	01H	+0.84	TEC	TEH			17	HOT	600UL
28	42	0.36	14	2	SAI		TSH	-16.49	TSH	TSH	0.00	18.48	176	HOT	580PP
28	108	0.64	21	2	SAI		TSH	-12.55	TSH	TSH	1.02		152	HOT	580PP
		0.88	21	2	SAI		TSH	-13.55	TSH	TSH	1.09	19.73	152	HOT	580PP
		2.66	29	2	SAI		TSH	-11.22	TSH	TSH	3.92		152	HOT	580PP
28	118	0.45	13	2	SAI		TSH	-1.78	TSH	TSH	0.00	17.39	162	HOT	580PP
29	113	0.67	8	2	SAI		04H	+0.01	04H	04H	0.00		252	HOT	580PP
30	40	0.41	72	P 2	TWD	19	02H	-1.24	TEC	TEH			18	HOT	600UL
30	56	0.46	17	P 1	SCI		TSH	-3.61	TSH	TSH	0.41	18.93	330	HOT	580PP
30	108	0.54	14	2	SAI		TSH	-1.17	TSH	TSH	0.0	20.27	156	HOT	580PP
30	118	0.46	15	P 1	SCI		TSH	-0.07	TSH	TSH	0.26	17.34	161	HOT	580PP
31	11	0.33	82	P 3	TWD	13	DBH	+1.27	TEC	TEH			1	HOT	600UL
		0.16	84	P 5	TWD	10	DBH	+1.53	DBH	DBH			144	COLD	560P2
31	125	1.47	35	P 1	SCI		TSH	-14.41	TSH	TSH	2.21	17.96	165	HOT	580PP
		0.98	29	P 1	SCI		TSH	-11.92	TSH	TSH	1.07		165	HOT	580PP
31	141	0.30	98	P 2	TWD	19	01H	+0.86	TEC	TEH			16	HOT	600UL
32	54	0.77	27	P 1	SCI		TSH	-0.32	TSH	TSH	0.88	18.20	228	HOT	580PP
33	71	0.84	95	P 5	TWD	37	DBC	-1.95	DBC	DBC	AIC		155	COLD	560P2
		0.29	101	P 5	TWD	16	DBH	-1.89	DBH	DBH			155	COLD	560P2
		0.78	92	P 5	TWD	38	DBC	-1.74	DBC	DBC			155	COLD	560P2
		0.59	144	P 3	TWD	27	DBC	-1.95	TEH	TEC			32	COLD	600UL
		0.10	22	P 3	TWD	7	DBH	-1.74	TEH	TEC	LAR		32	COLD	600UL
33	105	0.19	102	P 3	TWD	12	DBH	-1.88	TEH	TEC			8	COLD	600UL
		0.19	92	P 3	TWD	9	DBC	-1.97	TEH	TEC			8	COLD	600UL
		0.32	95	P 5	TWD	21	DBH	-2.05	DBH	DBH			169	COLD	560P2
		0.17	84	P 5	TWD	13	DBC	+1.47	DBC	DBC			169	COLD	560P2
		0.33	99	P 5	TWD	22	DBC	-1.80	DBC	DBC			169	COLD	560P2
33	159	0.26	83	P 2	TWD	12	07H	-0.84	TEC	TEH			21	HOT	600UL

MAI, MCI, MMI, MVI, SAI, SCI, SVI, 0-100%

QUERY: rpc_icodes_and_0-100%twd.qry

ROW	LINE	VOLTS	DEG	CHN	IND	%TW	LOCATION			EXT	EXT	UTIL 1	UTIL 2	CAL #	LEG	PROBE
34	32	0.75	22	P 1	SCI		TSH		-9.76	TSH	TSH	0.54		171	HOT	580PP
		0.85	22	P 1	SCI		TSH		-11.92	TSH	TSH	1.13		171	HOT	580PP
		1.82	31	P 1	SCI		TSH		-14.60	TSH	TSH	3.19		171	HOT	580PP
		1.06	26	P 1	SCI		TSH		-9.20	TSH	TSH	1.09	17.93	171	HOT	580PP
34	40	0.59	20	P 1	SCI		TSH		-11.64	TSH	TSH	1.01		176	HOT	580PP
		0.64	22	P 1	SCI		TSH		-12.06	TSH	TSH	1.09		176	HOT	580PP
		0.43	18	P 1	SCI		TSH		-14.24	TSH	TSH	0.65		176	HOT	580PP
		0.40	13	P 1	SCI		TSH		-15.31	TSH	TSH	0.68	18.83	176	HOT	580PP
34	72	1.26	85	P 5	TWD	44	DBC		+1.68	DBC	DBC			155	COLD	560P2
		0.87	92	P 3	TWD	33	DBC		+2.08	TEH	TEC			32	COLD	600UL
34	116	0.21	44	P 2	TWD	14	VSM		-0.86	TEH	TEC			6	COLD	600UL
34	122	0.26	20	P 1	SCI		SBH		-0.72	SBH	SBH	0.41	6.38	343	HOT	520ET
34	124	0.30	25	P 1	SCI		TSH		-11.40	TSH	TSH	1.04	17.96	165	HOT	580PP
		1.05	22	2	SAI		TSH		-10.42	TSH	TSH	2.20		165	HOT	580PP
		0.46	14	2	SAI		TSH		-10.18	TSH	TSH	0.65		165	HOT	580PP
		0.38	14	2	SAI		TSH		-9.83	TSH	TSH	0.62		165	HOT	580PP
		0.44	17	2	SAI		TSH		-9.68	TSH	TSH	0.66		165	HOT	580PP
		0.52	19	2	SAI		TSH		-9.47	TSH	TSH	0.55		165	HOT	580PP
		0.56	18	2	SAI		TSH		-8.07	TSH	TSH	0.49		165	HOT	580PP
		0.48	11	2	SAI		TSH		-6.65	TSH	TSH	0.23		165	HOT	580PP
		0.37	15	2	SAI		TSH		-4.37	TSH	TSH	0.52		165	HOT	580PP
34	162	0.36	102	P 2	TWD	16	04H		-0.80	TEC	TEH			21	HOT	600UL
35	25	0.74	87	P 2	TWD	29	VSM		-0.93	TEC	TEH			8	HOT	600UL
		0.23	38	P 2	TWD	13	VSM		+0.88	TEC	TEH			8	HOT	600UL
		0.53	94	P 5	TWD	30	VSM		-0.90	VSM	VSM			150	COLD	560P2
		0.15	97	P 5	TWD	10	VSM		+0.88	VSM	VSM			150	COLD	560P2
35	27	0.29	137	P 2	TWD	13	VSM		+0.98	TEC	TEH			7	HOT	600UL
35	71	0.65	88	P 5	TWD	32	DBC		-1.58	DBC	DBC			155	COLD	560P2
		0.38	85	P 3	TWD	17	DBC		-1.40	TEH	TEC			31	COLD	600UL
35	149	0.29	122	P 1	SCI		TSH		-0.03	TSH	TSH	0.00	18.01	193	HOT	580PP
35	155	0.12	32	P 3	TWD	10	DBH		+1.43	TEC	TEH			22	HOT	600UL
36	102	1.27	55	P 3	TWD	40	DBC		+1.77	TEH	TEC			8	COLD	600UL
		1.58	77	P 5	TWD	54	DBC	TO+2.00	-1.90	DBC	DBC	APN		174	COLD	560P2
36	104	0.78	127	P 5	TWD	43	DBH		-1.73	DBH	DBH			166	COLD	560P2
		0.84	83	P 3	TWD	34	DBH		-1.73	STH	TEC			58	COLD	600UL
37	25	0.60	18	2	SAI		TSH		-17.22	TSH	TSH	1.19	17.85	168	HOT	580PP
		0.27	16	2	SAI		TSH		-17.40	TSH	TSH	0.80		168	HOT	580PP
37	35	0.37	20	P 1	SCI		TSH		-9.83	TSH	TSH	0.19	18.02	172	HOT	580PP
37	47	0.37	128	P 2	TWD	19	VSM		+0.83	TEC	TEH			131	HOT	600UL
		0.33	94	P 5	TWD	21	VSM		+0.83	VSM	VSM			150	COLD	560P2
37	61	0.29	98	P 5	TWD	20	VSM		+1.03	VSM	VSM			149	COLD	560P2
		0.26	140	P 2	TWD	14	VSM		+0.96	TEH	TEC			29	COLD	600UL
37	133	5.55	38	P 1	SCI		TSH		-11.87	TSH	TSH	5.94	18.37	181	HOT	580PP
37	147	0.16	134	P 1	SCI		TSH		+0.01	TSH	TSH	0.00	17.91	194	HOT	580PP
38	12	0.65	26	P 2	TWD	23	06H		+0.53	TEC	TEH			1	HOT	600UL
		0.13	87	2	MAI		06H	TO+4.86	+3.98	06H	06H	0.0		259	HOT	580PP
38	24	0.37	92	P 2	TWD	16	VSM		-0.68	TEC	TEH			7	HOT	600UL
38	36	0.39	21	P 1	SCI		TSH		-0.13	TSH	TSH	0.17	17.97	175	HOT	580PP
38	74	1.26	89	P 5	TWD	47	DBH	TO+2.13	-1.99	DBH	DBH			155	COLD	560P2
		0.29	72	P 5	TWD	17	DBC		+1.64	DBC	DBC			155	COLD	560P2
		0.83	87	P 5	TWD	37	DBC		+2.00	DBC	DBC			155	COLD	560P2
		1.11	41	P 3	TWD	31	DBC		+1.72	TEH	TEC			33	COLD	600UL
		1.24	112	P 3	TWD	33	DBH		+0.00	TEH	TEC	LAR	LOCOK	33	COLD	600UL

MAI, MCI, MMI, MVI, SAI, SCI, SVI, 0-100%

QUERY: rpc_icodes_and_0-100%twd.qry

ROW	LINE	VOLTS	DEG	CHN	IND	%TW	LOCATION			EXT	EXT	UTIL 1	UTIL 2	CAL #	LEG	PROBE
38	102	1.09	116	P 3	TWD	33	DBC	+1.72		TEH	TEC			7	COLD	600UL
		0.46	123	P 3	TWD	20	DBC	+1.35		TEH	TEC			7	COLD	600UL
		1.12	88	P 5	TWD	45	DBC	-2.00	TO+2.00	DBC	DBC			169	COLD	560P2
38	104	0.15	137	P 5	TWD	15	DBH	-1.82		DBH	DBH			169	COLD	560P2
38	128	0.07	114	2	MAI		01H	+11.40	TO+21.98	01H	01H	0.0		244	HOT	580PP
39	13	0.31	138	P 2	TWD	16	VSM	+0.10		TEC	TEH			2	HOT	600UL
		0.14	104	2	SAI		VSM	+0.08		VSM	VSM			375	HOT	560P2
39	103	0.46	135	P 5	TWD	34	DBC	+1.80		DBC	DBC			166	COLD	560P2
		0.37	65	P 3	TWD	21	DBC	+1.80		STH	TEC			58	COLD	600UL
39	127	0.33	55	P 2	TWD	19	VSM	-0.86		TEH	TEC			4	COLD	600UL
39	131	0.25	20	P 1	SCI		TSH	-0.21		TSH	TSH	0.13	18.40	181	HOT	580PP
39	155	0.11	11	P 3	TWD	10	DBH	-1.12		TEC	TEH			22	HOT	600UL
40	72	0.23	86	P 2	TWD	13	VSM	+0.90		TEH	TEC			32	COLD	600UL
40	156	0.33	94	P 2	TWD	15	VSM	+0.80		TEC	TEH			21	HOT	600UL
41	39	0.25	141	P 2	TWD	13	03H	-1.19		TEC	TEH			18	HOT	600UL
41	73	0.26	93	P 5	TWD	15	VSM	+0.92		VSM	VSM			155	COLD	560P2
		0.31	130	P 2	TWD	17	VSM	+0.95		TEH	TEC			34	COLD	600UL
41	101	0.56	91	P 5	TWD	31	DBC	+1.91		DBC	DBC			169	COLD	560P2
		0.23	93	P 3	TWD	17	DBC	+2.00		TEC	TEH			6	HOT	600UL
		0.14	153	P 2	TWD	11	VSM	-0.80		TEC	TEH			6	HOT	600UL
41	157	0.31	23	P 3	TWD	22	DBH	+0.17		TEC	TEH			22	HOT	600UL
42	74	0.55	85	P 5	TWD	29	DBC	+1.88		DBC	DBC			155	COLD	560P2
		0.53	86	P 5	TWD	29	DBC	-1.77		DBC	DBC			155	COLD	560P2
		0.29	106	P 3	TWD	16	DBC	-2.00		TEH	TEC			34	COLD	600UL
		0.33	37	P 3	TWD	18	DBC	+1.56		TEH	TEC			34	COLD	600UL
42	104	0.54	23	2	SAI		TSH	-4.45		TSH	TSH	1.05	19.76	152	HOT	580PP
42	106	0.51	122	P 2	TWD	22	VSM	-0.70		TEH	TEC			7	COLD	600UL
		0.43	98	P 5	TWD	26	VSM	-0.92		VSM	VSM			169	COLD	560P2
		0.20	90	P 5	TWD	14	VSM	-0.10		VSM	VSM			169	COLD	560P2
42	112	0.57	13	2	SAI		TSH	-0.09		TSH	TSH	0.26	19.37	157	HOT	580PP
42	122	0.51	13	2	SAI		TSH	-2.60		TSH	TSH	0.00	18.33	165	HOT	580PP
42	152	0.27	142	P 3	TWD	19	DBC	+1.33		TEC	TEH			20	HOT	600UL
42	158	0.11	84	P 3	TWD	10	DBH	+1.28		TEC	TEH			22	HOT	600UL
		0.14	99	P 5	TWD	14	DBH	+1.90		DBH	DBH			175	COLD	560P2
42	160	0.31	150	P 3	TWD	22	DBC	+0.86		TEC	TEH			22	HOT	600UL
42	170	0.33	155	P 3	TWD	22	DBC	+1.30		TEC	TEH			26	HOT	600UL
43	19	0.60	89	P 2	TWD	25	02H	+0.86		TEC	TEH			8	HOT	600UL
		0.25	120	P 5	TWD	14	02H	+0.82		02H	02H			259	HOT	580PP
43	21	0.34	39	P 2	TWD	17	05H	+0.82		TEC	TEH			8	HOT	600UL
43	51	0.73	118	P 2	TWD	29	VSM	+0.85		TEC	TEH			131	HOT	600UL
		0.47	95	P 5	TWD	28	VSM	+0.93		VSM	VSM			150	COLD	560P2
43	57	0.29	96	P 3	TWD	18	DBC	+1.59		STH	TEC			58	COLD	600UL
		0.35	84	P 5	TWD	22	DBC	+1.80		DBC	DBC			150	COLD	560P2
43	63	0.65	18	2	SAI		TSH	-2.93		TSH	TSH	0.49	17.36	239	HOT	580PP
43	65	0.60	14	2	SAI		TSH	-3.99		TSH	TSH	0.57	19.52	238	HOT	580PP
		0.66	16	2	SAI		TSH	-3.85		TSH	TSH	0.37		238	HOT	580PP

MAI, MCI, MMI, MVI, SAI, SCI, SVI, 0-100%

QUERY: rpc_icodes_and_0-100%twd.qry

ROW	LINE	VOLTS	DEG	CHN	IND	%TW	LOCATION		EXT	EXT	UTIL 1	UTIL 2	CAL #	LEG	PROBE
43	67	0.46	15	2	SAI		TSH -1.32		TSH	TSH	0.00	17.42	239	HOT	580PP
43	75	0.41	86	P 5	TWD	24	VSM +0.95		VSM	VSM			155	COLD	560P2
		1.30	86	P 5	TWD	46	DBC +1.81		DBC	DBC			155	COLD	560P2
		0.67	106	P 2	TWD	29	VSM +0.84		TEH	TEC			34	COLD	600UL
		0.80	120	P 3	TWD	32	DBC +2.00		TEH	TEC			34	COLD	600UL
		0.39	15	2	SAI		TSH -7.25		TSH	TSH	0.57	17.29	219	HOT	580PP
43	101	0.21	98	P 5	TWD	15	DBC +1.90		DBC	DBC			169	COLD	560P2
		0.31	99	P 5	TWD	21	DBC -1.65		DBC	DBC			169	COLD	560P2
		0.29	83	P 3	TWD	13	DBC -1.78		TEC	TEH			5	HOT	600UL
43	113	0.81	16	2	SAI		TSH -2.97		TSH	TSH	0.85	19.56	157	HOT	580PP
		0.47	33	P 1	SCI		TSH -0.13		TSH	TSH	0.60	19.56	157	HOT	580PP
43	125	0.20	89	P 5	TWD	15	VSM -0.83		VSM	VSM			170	COLD	560P2
		0.40	127	P 2	TWD	22	VSM -0.83		TEH	TEC			4	COLD	600UL
43	149	0.25	157	P 3	TWD	18	DBC +2.25		TEC	TEH			20	HOT	600UL
44	42	0.50	13	2	SAI		TSH -1.13		TSH	TSH	.19	18.50	180	HOT	580PP
44	54	0.28	80	P 2	TWD	15	02H -0.13		TEH	TEC			28	COLD	600UL
44	58	0.25	102	P 5	TWD	17	VSM +0.83		VSM	VSM			150	COLD	560P2
		0.15	104	P 5	TWD	10	VSM -1.11		VSM	VSM			150	COLD	560P2
		0.33	133	P 2	TWD	18	VSM +0.83		TEH	TEC			28	COLD	600UL
		0.18	12	P 2	TWD	10	VSM -1.01		TEH	TEC			28	COLD	600UL
44	60	3.16	38	P 1	SCI		TSH -12.73		TSH	TSH	3.46	17.64	235	HOT	580PP
44	76	0.71	124	P 5	TWD	42	DBH +1.86		DBH	DBH			166	COLD	560P2
		0.16	136	P 5	TWD	18	DBH -1.56		DBH	DBH			166	COLD	560P2
		0.43	166	P 3	TWD	22	DBH +1.86		STH	TEC			59	COLD	600UL
44	98	0.66	168	P 3	TWD	23	DBC +1.59		TEC	TEH			9	HOT	600UL
		0.58	11	P 3	TWD	21	DBH +1.13		TEC	TEH			9	HOT	600UL
		0.24	148	P 3	TWD	11	DBH -1.47		TEC	TEH			9	HOT	600UL
		0.34	66	P 2	TWD	18	01H -0.28		TEC	TEH			9	HOT	600UL
		0.15	137	P 5	TWD	15	DBC -1.76		DBC	DBC			168	COLD	560P2
		0.56	129	P 5	TWD	36	DBC +1.75		DBC	DBC			168	COLD	560P2
		0.23	123	P 5	TWD	20	DBH -1.75		DBH	DBH			168	COLD	560P2
		0.81	121	P 5	TWD	42	DBH +1.75		DBH	DBH			168	COLD	560P2
44	114	2.34	32	P 1	MCI		TSH -7.82		TSH	TSH	3.55	19.17	162	HOT	580PP
		0.46	21	P 1	SCI		TSH -7.05		TSH	TSH	0.60		162	HOT	580PP
44	116	0.89	20	2	SAI		TSH -6.83		TSH	TSH	0.81	18.49	161	HOT	580PP
44	124	0.20	140	P 5	TWD	19	VSM -0.85		VSM	VSM			170	COLD	560P2
		0.29	72	P 2	TWD	18	VSM -0.85		TEH	TEC			4	COLD	600UL
45	73	0.48	94	P 5	TWD	26	DBC -1.69		DBC	DBC			155	COLD	560P2
		0.32	135	P 3	TWD	19	DBC -1.61		STH	TEC			58	COLD	600UL
45	75	1.06	82	P 5	TWD	45	DBC -2.00	TO+2.00	DBC	DBC			155	COLD	560P2
		0.97	91	P 5	TWD	40	DBH -1.87		DBH	DBH			155	COLD	560P2
		0.90	72	P 3	TWD	28	DBH -1.61		TEH	TEC			33	COLD	600UL
		1.59	143	P 3	TWD	37	DBC +1.84		TEH	TEC	LAR	LOCOK	33	COLD	600UL
45	121	0.32	22	P 1	SCI		TSH -11.48		TSH	TSH	0.46	18.64	165	HOT	580PP
45	151	0.12	102	2	SAI		02H -1.69		02H	02H	0.15		223	HOT	580PP
45	167	0.51	116	P 2	TWD	21	VSM -0.78		TEC	TEH			25	HOT	600UL
46	6	0.26	143	P 3	TWD	14	DBC +1.41		TEC	TEH			2	HOT	600UL
		0.35	84	P 5	TWD	21	DBC +1.83		DBC	DBC			144	COLD	560P2
46	56	0.15	106	P 1	SCI		TSH +0.04		TSH	TSH	0.23	17.48	229	HOT	580PP
46	76	1.09	133	P 5	TWD	48	DBH +1.87		DBH	DBH	APN		167	COLD	560P2
		0.21	126	P 5	TWD	19	DBC -2.00	TO+2.00	DBC	DBC			167	COLD	560P2
		0.96	28	P 3	TWD	38	DBH +1.39		TEC	TEH			6	HOT	600UL
		0.12	44	P 3	TWD	10	DBC -1.75		TEC	TEH			6	HOT	600UL

MAI, MCI, MMI, MVI, SAI, SCI, SVI, 0-100%

QUERY: rpc_icodes_and_0-100%twd.qry

ROW	LINE	VOLTS	DEG	CHN	IND	%TW	LOCATION			EXT	EXT	UTIL 1	UTIL 2	CAL #	LEG	PROBE
46	98	0.95	63	P 3	TWD	38	DBH	-1.74		TEC	TEH			10	HOT	600UL
		1.31	98	P 5	TWD	49	DBH	-1.78		DBH	DBH	APN		168	COLD	560P2
46	104	0.26	19	P 1	SCI		TSH	-11.39		TSH	TSH	0.00	20.79	329	HOT	580PP
46	110	0.69	31	P 1	MCI		TSH	-12.49		TSH	TSH	0.49	18.95	157	HOT	580PP
46	114	0.46	18	P 1	SCI		TSH	-0.11		TSH	TSH	0.63	18.81	161	HOT	580PP
46	116	0.54	62	P 2	TWD	26	VSM	-0.84		STH	TEC			58	COLD	600UL
46	160	0.24	24	P 3	TWD	19	DBH	-2.10		TEC	TEH			22	HOT	600UL
47	65	0.48	12	2	SAI		TSH	-6.30		TSH	TSH	0.81	19.56	238	HOT	580PP
		0.55	10	2	SAI		TSH	-4.27		TSH	TSH	0.60		238	HOT	580PP
		0.58	10	2	SAI		TSH	-3.36		TSH	TSH	0.55		238	HOT	580PP
47	69	0.33	17	2	SAI		TSH	-1.62		TSH	TSH	.47	17.62	213	HOT	580PP
47	105	0.55	14	2	SAI		TSH	-1.29		TSH	TSH	0.62	19.67	156	HOT	580PP
47	109	0.20	98	P 5	TWD	16	VSM	+0.03		VSM	VSM			166	COLD	560P2
		0.20	102	P 5	TWD	16	VSM	+0.93		VSM	VSM			166	COLD	560P2
		0.31	118	P 2	TWD	15	VSM	+0.97		STH	TEC			59	COLD	600UL
47	125	0.28	115	P 2	TWD	17	VSM	+0.80		TEH	TEC			4	COLD	600UL
47	127	0.48	21	P 1	SCI		TSH	-3.73		TSH	TSH	1.68	18.18	169	HOT	580PP
47	143	0.16	117	P 2	TWD	11	VSM	-0.78		TEC	TEH			16	HOT	600UL
48	56	0.24	104	2	SAI		TSH	+0.00		TSH	TSH	0.20	18.30	228	HOT	580PP
48	68	0.28	56	P 2	TWD	15	VSM	+0.83		TEH	TEC			31	COLD	600UL
		0.11	87	2	SAI		TSH	+0.96		TSH	TSH	0.00	17.79	250	HOT	580PP
48	70	0.16	122	2	SAI		TSH	+0.65		TSH	TSH	0.0	17.81	213	HOT	580PP
48	76	0.38	139	P 5	TWD	29	DBC	-1.75		DBC	DBC			167	COLD	560P2
		0.24	69	P 3	TWD	11	DBC	-1.61		TEC	TEH			5	HOT	600UL
48	98	1.37	79	P 5	TWD	50	DBH	+1.75		DBH	DBH			174	COLD	560P2
		1.02	88	P 3	TWD	30	DBH	+1.47		TEC	TEH			9	HOT	600UL
		0.35	35	P 3	TWD	14	DBC	+1.43		TEC	TEH			9	HOT	600UL
		0.36	126	P 5	TWD	28	DBC	+1.43		DBC	DBC			168	COLD	560P2
48	108	0.64	130	P 2	TWD	26	VSM	+0.00		TEH	TEC			7	COLD	600UL
		0.59	91	P 5	TWD	32	VSM	+0.12		VSM	VSM			169	COLD	560P2
		0.28	102	P 5	TWD	19	VSM	-0.77		VSM	VSM			169	COLD	560P2
		0.22	103	P 5	TWD	16	VSM	+0.75		VSM	VSM			169	COLD	560P2
		0.24	144	2	SAI		06H	+0.03		06H	06H	0.39		248	HOT	580PP
48	120	0.54	34	P 2	TWD	24	08H	+0.99		TEH	TEC		LOCOK	3	COLD	600UL
48	122	0.15	96	P 1	SCI		TSH	+0.13		TSH	TSH	0.00	18.34	166	HOT	580PP
48	148	0.49	30	P 3	TWD	15	DBC	+2.00		TEC	TEH			19	HOT	600UL
49	33	0.44	132	P 2	TWD	16	08C	-1.23		TEC	TEH			13	HOT	600UL
49	53	0.47	77	P 2	TWD	22	08C	-1.23		TEC	TEH			131	HOT	600UL
		0.28	91	2	SAI		08C	-1.23		08C	08C	0.18		142	COLD	580PP
49	71	0.53	93	P 5	TWD	34	VSM	-0.89		VSM	VSM			155	COLD	560P2
		0.85	117	P 2	TWD	34	VSM	-0.89		STH	TEC			58	COLD	600UL
49	73	0.49	18	2	SAI		TSH	-6.77		TSH	TSH	0.64	18.56	218	HOT	580PP
		1.51	25	2	SAI		TSH	-10.63		TSH	TSH	1.83		218	HOT	580PP
		0.35	18	2	SAI		TSH	-10.42		TSH	TSH	0.00		218	HOT	580PP
49	75	0.53	95	P 5	TWD	28	DBH	-1.79		08H	DBH			155	COLD	560P2
		0.36	87	P 3	TWD	15	DBH	-1.60		TEH	TEC			33	COLD	600UL
49	79	0.39	138	P 5	TWD	29	DBH	-1.66		08H	DBH			167	COLD	560P2
		0.78	137	P 5	TWD	42	DBC	-2.00	TO+2.00	DBC	08C			167	COLD	560P2
		0.38	141	P 3	TWD	16	DBH	-1.57		TEC	TEH			5	HOT	600UL

MAI, MCI, MMI, MVI, SAI, SCI, SVI, 0-100%

QUERY: rpc_icodes_and_0-100%twd.qry

ROW	LINE	VOLTS	DEG	CHN	IND	%TW	LOCATION			EXT	EXT	UTIL 1	UTIL 2	CAL #	LEG	PROBE
		0.73	76	P 3	TWD	25	DBC	-1.34		TEC	TEH			5	HOT	600UL
49	103	0.45	17	2	SAI		TSH	-1.21		TSH	TSH	0.33	19.31	156	HOT	580PP
49	169	0.33	104	P 3	TWD	21	DBC	+1.43		TEC	TEH			26	HOT	600UL
50	8	0.32	137	P 2	TWD	16	VSM	+0.83		TEC	TEH			2	HOT	600UL
		0.29	78	P 5	TWD	16	VSM	+0.93		VSM	07H			195	HOT	560P2
50	32	0.41	100	P 2	TWD	19	01H	+0.75		TEC	TEH			14	HOT	600UL
50	66	0.31	24	P 2	TWD	18	08C	+1.20		STH	TEC			58	COLD	600UL
50	76	0.76	135	P 5	TWD	41	DBC	-2.00	TO+2.00	DBC	DBC			167	COLD	560P2
		0.70	110	P 3	TWD	34	DBC	-1.84		TEC	TEH			6	HOT	600UL
		0.33	104	P 2	TWD	20	01H	+0.92		TEC	TEH			6	HOT	600UL
50	98	0.31	109	P 2	TWD	20	VSM	-0.85		TEC	TEH			10	HOT	600UL
		0.25	142	P 5	TWD	22	VSM	-0.85		VSM	VSM			168	COLD	560P2
50	100	0.89	146	P 5	TWD	35	DBC	-2.00	TO+0.18	DBC	08C			169	COLD	560P2
		0.46	130	P 3	TWD	19	DBC	-1.43		TEC	TEH			5	HOT	600UL
50	110	0.43	84	P 2	TWD	20	08H	+1.48		TEH	TEC		LOCOK	7	COLD	600UL
50	112	0.26	17	P 1	SCI		TSH	-0.13		TSH	TSH	0.00	19.59	157	HOT	580PP
50	118	0.31	121	P 2	TWD	17	08H	-1.20		TEH	TEC			5	COLD	600UL
50	124	0.25	134	P 2	TWD	14	VSM	+0.85		TEH	TEC			3	COLD	600UL
51	45	0.19	160	P 3	TWD	11	DBH	-1.56		TEC	TEH			18	HOT	600UL
51	77	0.73	134	P 5	TWD	40	DBC	-1.89		DBC	DBC			167	COLD	560P2
		0.42	117	P 3	TWD	25	DBC	-1.79		TEC	TEH			6	HOT	600UL
51	81	0.47	134	P 5	TWD	32	DBH	-1.81		DBH	DBH			167	COLD	560P2
		0.39	135	P 5	TWD	29	DBH	+1.79		DBH	DBH			167	COLD	560P2
		0.59	130	P 5	TWD	37	DBC	-2.00	TO+2.00	DBC	DBC			167	COLD	560P2
		0.36	172	P 3	TWD	15	DBH	+1.43		TEC	TEH			5	HOT	600UL
		0.41	111	P 3	TWD	17	DBC	-1.49		TEC	TEH			5	HOT	600UL
		0.34	127	P 3	TWD	15	DBC	+1.97		TEC	TEH			5	HOT	600UL
		0.41	150	P 3	TWD	17	DBH	-1.53		TEC	TEH			5	HOT	600UL
51	99	0.60	79	P 3	TWD	32	DBH	-1.99		TEC	TEH			10	HOT	600UL
		0.27	72	P 3	TWD	19	DBC	-1.16		TEC	TEH			10	HOT	600UL
		0.46	95	P 5	TWD	27	DBC	-2.00		DBC	08C			169	COLD	560P2
		0.76	131	P 5	TWD	41	DBH	-1.99		DBH	DBH			168	COLD	560P2
51	101	0.33	25	2	SAI		TSH	-2.60		TSH	TSH	0.41	18.60	144	HOT	580PP
		0.57	17	2	SAI		TSH	-2.25		TSH	TSH	0.49		144	HOT	580PP
		0.40	18	2	SAI		TSH	-1.92		TSH	TSH	0.42		144	HOT	580PP
		0.52	22	2	SAI		TSH	-1.36		TSH	TSH	0.38		144	HOT	580PP
51	105	0.33	21	P 1	SCI		SBH	-1.87		SBH	SBH	0.00	6.19	340	HOT	520ET
51	107	1.21	28	P 1	SCI		TSH	-16.50		TSH	TSH	0.96	19.34	156	HOT	580PP
		0.82	26	P 1	SCI		TSH	-15.57		TSH	TSH	0.88		156	HOT	580PP
		0.79	18	P 1	SCI		TSH	-15.08		TSH	TSH	0.52		156	HOT	580PP
		0.42	12	2	SAI		TSH	-7.52		TSH	TSH	0.73		156	HOT	580PP
		0.83	17	2	SAI		TSH	-7.21		TSH	TSH	1.37		156	HOT	580PP
51	117	0.47	113	P 2	TWD	23	08H	+0.80		TEH	TEC			5	COLD	600UL
51	163	0.31	167	P 3	TWD	22	DBC	+1.55		TEC	TEH			22	HOT	600UL
		0.27	106	P 2	TWD	19	VH3	+0.85		TEC	TEH			22	HOT	600UL
		0.04	130	P 5	TWD	18	VH3	+1.04		VH3	VH3			172	COLD	560P2
52	68	0.27	68	P 2	TWD	15	VSM	-0.66		TEH	TEC			32	COLD	600UL
52	76	0.30	144	P 5	TWD	24	DBC	-1.76		DBC	DBC			167	COLD	560P2
		0.20	40	P 3	TWD	9	DBC	-1.44		TEC	TEH			5	HOT	600UL
52	90	0.53	80	P 5	TWD	31	DBC	-1.86		DBC	DBC			166	COLD	560P2
		0.98	127	P 5	TWD	47	DBH	-2.25	TO+2.25	DBH	DBH			166	COLD	560P2
		0.35	140	P 3	TWD	19	DBC	-1.75		STH	TEC			59	COLD	600UL

MAI, MCI, MMI, MVI, SAI, SCI, SVI, 0-100%

QUERY: rpc_icodes_and_0-100%twd.qry

ROW	LINE	VOLTS	DEG	CHN	IND	%TW	LOCATION			EXT	EXT	UTIL 1	UTIL 2	CAL #	LEG	PROBE
		1.27	57	P 3	TWD	40	DBH	-2.00	TO+2.00	STH	TEC			59	COLD	600UL
52	94	0.45	123	P 3	TWD	27	DBC	-1.39		TEC	TEH			6	HOT	600UL
		0.57	21	P 3	TWD	30	DBH	+1.49		TEC	TEH			6	HOT	600UL
		0.72	93	P 5	TWD	36	DBC	-1.68		DBC	DBC			168	COLD	560P2
		1.26	87	P 5	TWD	46	DBH	-0.60	TO+2.00	DBH	DBH			168	COLD	560P2
52	96	0.24	159	P 3	TWD	11	DBC	-2.17		TEC	TEH			9	HOT	600UL
		0.78	87	P 3	TWD	26	DBH	-1.59		TEC	TEH			9	HOT	600UL
		1.05	91	P 5	TWD	43	DBH	-2.00	TO+2.00	DBH	DBH			168	COLD	560P2
		0.28	146	P 5	TWD	23	DBC	-2.17		DBC	DBC			168	COLD	560P2
52	114	0.52	15	2	SAI		TSH	-1.92		TSH	TSH	0.43	19.28	162	HOT	580PP
		0.49	15	2	SAI		TSH	-1.67		TSH	TSH	0.07		162	HOT	580PP
52	144	0.18	171	P 2	TWD	9	VH3	-1.00		TEC	TEH			15	HOT	600UL
53	21	0.40	28	P 2	TWD	17	VSM	-0.84		TEC	TEH			7	HOT	600UL
53	45	0.18	133	P 3	TWD	7	DBH	-2.20		TEC	TEH			17	HOT	600UL
53	71	0.13	114	2	SAI		TSH	+0.48		TSH	TSH	0.0	18.30	215	HOT	580PP
53	77	0.28	11	2	SAI		TSH	-0.57		TSH	TSH	0.29	19.38	150	HOT	580PP
53	79	0.38	14	2	SAI		TSH	-1.24		TSH	TSH	.28	18.43	151	HOT	580PP
53	95	0.94	15	2	MAI		TSH	-0.88		TSH	TSH	1.09	18.41	145	HOT	580PP
		0.25	121	P 3	TWD	18	DBC	-1.75		TEC	TEH			6	HOT	600UL
		0.43	131	P 5	TWD	31	DBC	-1.75		DBC	DBC			168	COLD	560P2
54	8	0.33	116	P 2	TWD	16	01H	+0.00		TEC	TEH			2	HOT	600UL
		0.18	129	P 2	TWD	10	01H	-1.01		TEC	TEH			2	HOT	600UL
		0.28	85	P 5	TWD	19	01H	+0.09		01H	01H			259	HOT	580PP
		0.18	70	P 5	TWD	13	01H	-1.00		01H	01H			259	HOT	580PP
54	58	0.20	25	P 3	TWD	11	DBH	-2.06		TEH	TEC			28	COLD	600UL
54	76	0.25	146	P 5	TWD	22	DBC	-1.71		DBC	DBC			167	COLD	560P2
		0.27	106	P 3	TWD	19	DBC	-1.71		TEC	TEH			6	HOT	600UL
54	84	0.64	142	P 5	TWD	38	DBH	-0.50	TO+2.00	DBH	DBH			167	COLD	560P2
		0.56	57	P 3	TWD	21	DBH	+1.63		TEC	TEH			5	HOT	600UL
54	92	0.12	132	P 3	TWD	6	DBH	-1.47		TEC	TEH			5	HOT	600UL
		0.18	104	P 5	TWD	13	DBH	-2.00		DBH	DBH			168	COLD	560P2
54	94	0.35	109	P 3	TWD	15	DBH	-1.56		TEC	TEH			5	HOT	600UL
		0.83	19	2	SAI		06H	+0.69		06H	06H	0.00		200	HOT	580PP
		0.70	14	2	SAI		06H	+0.50		06H	06H	0.00		200	HOT	580PP
		0.71	89	P 5	TWD	35	DBH	-2.00	TO+2.00	DBH	DBH			168	COLD	560P2
54	96	0.51	140	P 5	TWD	36	DBH	-1.61		08H	DBH			166	COLD	560P2
		0.43	49	P 3	TWD	24	DBH	-1.61		STH	TEC			58	COLD	600UL
55	17	0.29	115	P 2	TWD	15	VC3	-0.79		TEC	TEH			8	HOT	600UL
55	29	0.26	140	P 2	TWD	11	VC3	+0.77		TEC	TEH			13	HOT	600UL
55	77	0.13	103	2	SAI		TSH	+0.30		TSH	TSH	0.0	18.40	151	HOT	580PP
55	81	0.33	142	P 5	TWD	26	DBH	-1.70		DBH	DBH			167	COLD	560P2
		0.14	129	P 3	TWD	11	DBH	-1.40		TEC	TEH			6	HOT	600UL
55	83	0.71	142	P 5	TWD	42	DBH	-1.84	TO+1.95	DBH	DBH			166	COLD	560P2
		0.39	167	P 3	TWD	21	DBH	+1.79		STH	TEC			59	COLD	600UL
		0.61	104	P 3	TWD	28	DBH	-1.67		STH	TEC			59	COLD	600UL
55	89	0.65	126	P 5	TWD	40	DBC	-1.54		DBC	DBC			166	COLD	560P2
		0.29	126	P 5	TWD	27	DBC	+1.47		DBC	DBC			166	COLD	560P2
		0.24	135	P 3	TWD	14	DBC	+1.47		STH	TEC			59	COLD	600UL
		0.68	90	P 3	TWD	30	DBC	-1.54		STH	TEC			59	COLD	600UL
55	91	0.30	67	P 3	TWD	13	DBH	-1.75		TEC	TEH			5	HOT	600UL
		0.43	108	P 5	TWD	28	DBH	-1.75		DBH	DBH			168	COLD	560P2

MAI, MCI, MMI, MVI, SAI, SCI, SVI, 0-100%

QUERY: rpc_icodes_and_0-100%twd.qry

ROW	LINE	VOLTS	DEG	CHN	IND	%TW	LOCATION		EXT	EXT	UTIL 1	UTIL 2	CAL #	LEG	PROBE
55	95	0.60	175	P 3	TWD	22	DBC +1.99		TEC	TEH			5	HOT	600UL
		0.45	132	P 5	TWD	31	DBC +1.99		DBC	DBC			168	COLD	560P2
55	97	0.39	168	P 3	TWD	24	DBH +1.30		TEC	TEH			10	HOT	600UL
		0.47	94	P 5	TWD	29	DBH +1.75		DBH	DBH			168	COLD	560P2
55	111	0.11	104	2	SAI		TSH +2.10		TSH	TSH	0.30	19.60	157	HOT	580PP
55	157	0.38	57	P 2	TWD	17	VH3 +0.64		TEC	TEH			21	HOT	600UL
		0.37	59	P 2	TWD	16	VH3 -0.81		TEC	TEH			21	HOT	600UL
56	72	0.13	114	P 1	SCI		TSH +0.00		TSH	TSH	0.00	18.21	246	HOT	580PP
56	80	0.45	144	P 5	TWD	32	DBC -1.78		DBC	DBC			167	COLD	560P2
		0.30	139	P 5	TWD	25	DBH -1.80		DBH	DBH			167	COLD	560P2
		0.22	133	P 5	TWD	20	DBH -1.20	TO+1.75	DBH	DBH			167	COLD	560P2
		0.43	134	P 3	TWD	18	DBC -1.82		TEC	TEH			5	HOT	600UL
		0.36	68	P 3	TWD	15	DBH -1.90		TEC	TEH			5	HOT	600UL
56	108	0.37	55	P 2	TWD	18	03H +0.78		TEH	TEC			7	COLD	600UL
57	19	0.29	131	P 2	TWD	13	VH3 -0.84		TEC	TEH			7	HOT	600UL
57	23	0.41	57	P 2	TWD	20	VC3 +0.85		TEC	TEH			8	HOT	600UL
57	25	0.45	87	P 2	TWD	19	VH3 -0.92		TEC	TEH			7	HOT	600UL
57	55	0.33	29	P 1	SCI		TSH -4.06		TSH	TSH	0.73	20.09	203	HOT	580PP
57	81	0.52	137	P 5	TWD	34	DBH -1.75		DBH	DBH			167	COLD	560P2
		0.54	109	P 3	TWD	20	DBH -1.77		TEC	TEH			5	HOT	600UL
57	83	0.65	139	P 5	TWD	38	DBH -2.00	TO+1.90	DBH	DBH			167	COLD	560P2
		0.27	110	P 3	TWD	19	DBH -1.54		TEC	TEH			6	HOT	600UL
		0.15	123	2	SAI		TSH +1.24		TSH	TSH	.23	18.37	151	HOT	580PP
57	85	0.53	132	P 5	TWD	35	DBH -1.90	TO+1.90	DBH	DBH			167	COLD	560P2
		0.46	38	P 3	TWD	27	DBH +1.91		TEC	TEH			6	HOT	600UL
		0.24	49	P 3	TWD	18	DBH -1.56		TEC	TEH			6	HOT	600UL
57	87	0.70	132	P 5	TWD	40	DBH -2.00	TO+2.00	DBH	DBH			167	COLD	560P2
		0.73	25	P 3	TWD	34	DBH +1.71		TEC	TEH			6	HOT	600UL
57	89	0.68	44	P 3	TWD	24	DBC +1.93		TEC	TEH			5	HOT	600UL
		1.10	90	P 5	TWD	44	DBH -1.70	TO+2.00	DBH	DBH			168	COLD	560P2
		0.52	106	P 5	TWD	32	DBC +1.75		DBC	DBC			168	COLD	560P2
		0.62	74	P 3	TWD	23	DBH -1.74		TEC	TEH			5	HOT	600UL
		0.66	121	P 3	TWD	24	DBH +1.36		TEC	TEH			5	HOT	600UL
57	97	0.53	16	P 3	TWD	19	DBH +1.61		TEC	TEH			9	HOT	600UL
		0.44	121	P 5	TWD	29	DBH +1.78		DBH	DBH			168	COLD	560P2
57	103	0.37	13	2	SAI		TSH -8.31		TSH	TSH	0.0	19.22	156	HOT	580PP
57	119	0.43	23	P 1	MCI		TSH -0.09		TSH	TSH	0.31	17.75	162	HOT	580PP
57	151	0.28	135	P 1	SCI		TSH +0.04		TSH	TSH	0.51	18.14	196	HOT	580PP
57	159	0.31	121	P 2	TWD	14	VH3 -0.86		TEC	TEH			21	HOT	600UL
57	167	0.48	137	P 2	TWD	22	02C +0.87		TEC	TEH			25	HOT	600UL
		0.37	76	P 5	TWD	23	02C +0.83		02C	02C			137	COLD	580PP
		0.25	82	P 5	TWD	17	02C +0.06		02C	02C			137	COLD	580PP
58	32	0.30	88	P 2	TWD	14	VH3 -0.93		TEC	TEH			14	HOT	600UL
58	82	0.32	140	P 5	TWD	28	DBC -1.98	TO+1.90	DBC	DBC			166	COLD	560P2
		0.20	176	P 3	TWD	12	DBC +2.00		STH	TEC			59	COLD	600UL
		0.34	81	P 3	TWD	19	DBC +1.25		STH	TEC			59	COLD	600UL
58	84	1.28	126	P 5	TWD	50	DBH -2.00	TO+2.00	DBH	DBH			167	COLD	560P2
		0.42	144	P 5	TWD	30	DBC -1.60	TO+1.90	DBC	DBC			167	COLD	560P2
		0.78	14	P 3	TWD	27	DBH -2.00	TO+2.00	TEC	TEH			5	HOT	600UL
		0.14	152	P 3	TWD	7	DBC -1.75		TEC	TEH			5	HOT	600UL
		0.51	83	P 3	TWD	20	DBC +1.95		TEC	TEH			5	HOT	600UL

MAI, MCI, MMI, MVI, SAI, SCI, SVI, 0-100%

QUERY: rpc_icodes_and_0-100%twd.qry

ROW	LINE	VOLTS	DEG	CHN	IND	%TW	LOCATION			EXT	EXT	UTIL 1	UTIL 2	CAL #	LEG	PROBE
58	86	0.33	131	P 5	TWD	26	DBC	+1.85		DBC	DBC			167	COLD	560P2
		1.60	78	P 5	TWD	54	DBH	+0.00	TO+2.00	DBH	DBH			174	COLD	560P2
		1.65	68	P 3	TWD	39	DBH	+1.01		TEC	TEH			5	HOT	600UL
		0.53	172	P 3	TWD	21	DBC	+1.82		TEC	TEH			5	HOT	600UL
58	88	0.30	144	P 5	TWD	27	DBC	-1.63		DBC	DBC			166	COLD	560P2
		0.41	123	P 3	TWD	22	DBC	-1.63		STH	TEC			59	COLD	600UL
58	96	0.19	115	P 3	TWD	15	DBH	-1.70		TEC	TEH			10	HOT	600UL
		0.43	121	P 5	TWD	29	DBH	-1.75		DBH	DBH			168	COLD	560P2
58	116	0.21	101	P 2	TWD	14	VC3	+0.84		TEH	TEC			6	COLD	600UL
59	23	0.48	123	P 2	TWD	19	VH3	-0.92		TEC	TEH			7	HOT	600UL
59	25	0.36	131	P 2	TWD	18	VH3	-1.01		TEC	TEH			8	HOT	600UL
		0.36	162	P 2	TWD	18	VH3	+0.89		TEC	TEH			8	HOT	600UL
59	27	0.24	134	P 2	TWD	10	VH3	-1.14		TEC	TEH			7	HOT	600UL
59	33	2.67	29	2	SAI		TSH	-9.50		TSH	TSH	3.27	17.46	171	HOT	580PP
59	57	0.34	57	P 2	TWD	17	02H	-1.13		TEH	TEC			28	COLD	600UL
59	63	0.31	105	P 2	TWD	17	VSM	+0.89		TEH	TEC			30	COLD	600UL
59	65	0.16	96	2	SAI		TSH	+1.04		TSH	TSH	0.21	20.70	208	HOT	580PP
59	85	0.84	135	P 5	TWD	43	DBC	-1.90	TO+1.90	DBC	DBC			167	COLD	560P2
		0.37	59	P 3	TWD	15	DBC	-1.78		TEC	TEH			5	HOT	600UL
		1.00	130	P 3	TWD	30	DBC	+1.72		TEC	TEH			5	HOT	600UL
59	87	0.37	14	2	SAI		TSH	-3.86		TSH	TSH	0.23	19.56	150	HOT	580PP
		0.59	131	P 5	TWD	37	DBH	-1.80		DBH	DBH			167	COLD	560P2
		0.76	114	P 3	TWD	26	DBH	-1.80		TEC	TEH			5	HOT	600UL
59	91	0.15	114	2	MAI		TSH	+0.98		TSH	TSH	0.0	18.51	151	HOT	580PP
59	95	0.20	96	P 3	TWD	15	DBC	+1.93		TEC	TEH			6	HOT	600UL
		0.36	134	P 5	TWD	28	DBC	+1.93		DBC	DBC			168	COLD	560P2
59	99	0.20	118	P 2	TWD	15	01H	-0.17		TEC	TEH			10	HOT	600UL
59	157	0.32	94	P 2	TWD	15	VH3	-0.92		TEC	TEH			21	HOT	600UL
59	161	0.37	88	P 2	TWD	16	VH3	-0.86		TEC	TEH			21	HOT	600UL
60	92	0.41	20	2	SAI		TSH	-0.38		TSH	TSH	0.49	19.42	150	HOT	580PP
60	116	0.47	29	P 1	MCI		TSH	+0.00		TSH	TSH	0.37	19.06	162	HOT	580PP
60	126	0.40	20	P 1	MCI		TSH	-0.13		TSH	TSH	0.65	18.04	165	HOT	580PP
60	134	0.72	23	P 1	SCI		TSH	-9.25		TSH	TSH	0.75	18.41	182	HOT	580PP
61	27	0.37	39	P 2	TWD	18	VH3	-1.07		TEC	TEH			8	HOT	600UL
61	31	0.26	119	P 2	TWD	11	VH3	+1.00		TEC	TEH			13	HOT	600UL
61	61	0.28	147	P 2	TWD	15	VH3	+0.80		TEH	TEC			30	COLD	600UL
61	77	0.14	104	2	MAI		TSH	+0.71	TO+1.46	TSH	TSH	0.0	18.38	151	HOT	580PP
61	85	0.45	134	P 5	TWD	32	DBC	-1.90	TO+1.90	DBC	DBC			167	COLD	560P2
		0.57	169	P 3	TWD	21	DBC	+1.88		TEC	TEH			5	HOT	600UL
61	99	0.14	107	P 1	SCI		TSH	+0.03		TSH	TSH	0.16	18.19	144	HOT	580PP
61	125	0.26	119	P 2	TWD	14	VC3	-0.10		TEH	TEC			3	COLD	600UL
		0.43	31	P 2	TWD	21	02H	-1.14		TEH	TEC			3	COLD	600UL
		0.26	90	P 5	TWD	20	VC3	+0.18		VC3	VC3			169	COLD	560P2
62	24	0.29	125	P 2	TWD	14	VH3	+0.12		TEC	TEH			7	HOT	600UL
62	158	0.20	168	P 3	TWD	16	DBC	+1.48		TEC	TEH			22	HOT	600UL

MAI, MCI, MMI, MVI, SAI, SCI, SVI, 0-100%

QUERY: rpc_icodes_and_0-100%twd.qry

ROW	LINE	VOLTS	DEG	CHN	IND	%TW	LOCATION			EXT	EXT	UTIL 1	UTIL 2	CAL #	LEG	PROBE
63	81	0.30	18	2	SAI		TSH	-1.86		TSH	TSH	0.0	18.77	151	HOT	580PP
63	87	0.69	134	P 5	TWD	41	DBH	-0.58	TO+1.97	DBH	DBH			166	COLD	560P2
		0.80	21	P 3	TWD	32	DBH	+1.97		STH	TEC			59	COLD	600UL
63	91	0.43	16	2	SAI		TSH	-1.22		TSH	TSH	.44	18.16	151	HOT	580PP
64	26	0.30	85	P 2	TWD	13	03H	-1.22		TEC	TEH			7	HOT	600UL
64	56	0.34	14	2	SAI		TSH	-1.22		TSH	TSH	0.0	20.09	203	HOT	580PP
64	66	0.69	13	2	SAI		TSH	-3.84		TSH	TSH	0.62	20.73	208	HOT	580PP
64	78	0.17	95	2	MAI		TSH	+0.67		TSH	TSH	0.31	18.48	151	HOT	580PP
64	80	0.34	131	P 5	TWD	27	DBH	-1.85	TO+1.85	DBH	DBH			167	COLD	560P2
		0.38	106	P 3	TWD	16	DBH	+1.28		TEC	TEH			5	HOT	600UL
64	110	0.44	18	2	SAI		TSH	-10.93		TSH	TSH	0.91	19.54	158	HOT	580PP
		0.50	16	2	SAI		TSH	-10.76		TSH	TSH	0.94	19.54	158	HOT	580PP
64	120	0.20	129	P 2	TWD	11	VH3	-0.53		TEH	TEC			3	COLD	600UL
64	158	0.44	54	P 2	TWD	19	VH3	-0.94		TEC	TEH			21	HOT	600UL
		0.65	139	P 2	TWD	24	VH3	+0.73		TEC	TEH			21	HOT	600UL
65	47	0.69	25	P 1	SCI		TSH	-12.79		TSH	TSH	0.47	19.98	203	HOT	580PP
65	53	2.59	38	P 1	SCI		TSH	-12.74		TSH	TSH	4.87	19.98	203	HOT	580PP
65	81	0.28	139	P 5	TWD	23	DBC	-2.00	TO+2.00	DBC	DBC			167	COLD	560P2
		0.14	101	P 3	TWD	7	DBC	-1.32		TEC	TEH			5	HOT	600UL
65	85	0.63	135	P 5	TWD	38	DBC	-2.00	TO+2.00	DBC	DBC			167	COLD	560P2
		0.46	91	P 3	TWD	27	DBC	-1.75		TEC	TEH			6	HOT	600UL
		0.37	173	P 3	TWD	24	DBC	+1.75		TEC	TEH			6	HOT	600UL
65	97	0.28	92	P 2	TWD	15	02H	-1.23		TEC	TEH			9	HOT	600UL
65	113	0.95	31	P 1	MCI		SBH	-0.54		SBH	SBH	2.39	6.63	340	HOT	520ET
		0.39	24	P 1	SCI		SBH	-0.96		SBH	SBH	0.00		340	HOT	520ET
65	115	0.27	15	P 1	SCI		SBH	-3.22		SBH	SBH	0.00		340	HOT	520ET
		1.36	34	P 1	MCI		SBH	-0.35		SBH	SBH	3.05	6.62	340	HOT	520ET
65	149	0.19	155	P 1	SCI		TSH	+0.02		TSH	TSH	0.00	18.34	194	HOT	580PP
66	18	0.53	34	P 2	TWD	23	VH3	+0.67		TEC	TEH			8	HOT	600UL
66	48	0.26	97	P 5	TWD	18	VSM	+0.92		VSM	VSM			152	COLD	560P2
		0.36	98	P 5	TWD	23	VSM	-0.77		VSM	VSM			152	COLD	560P2
		0.53	116	P 2	TWD	23	VSM	-0.78		TEC	TEH			129	HOT	600UL
		0.28	144	P 2	TWD	15	VSM	+0.84		TEC	TEH			129	HOT	600UL
66	124	0.37	80	P 2	TWD	21	VH3	-0.73		TEH	TEC			4	COLD	600UL
66	142	0.35	21	P 3	TWD	22	DBC	+0.79		TEC	TEH			16	HOT	600UL
67	11	0.59	79	P 2	TWD	22	VH3	-0.83		TEC	TEH			1	HOT	600UL
67	25	0.32	53	P 2	TWD	17	06H	+0.77		TEC	TEH			8	HOT	600UL
67	53	0.45	21	P 1	SCI		TSH	-12.20		TSH	TSH	0.00	21.04	204	HOT	580PP
67	57	0.51	21	P 1	MCI		TSH	-0.15		TSH	TSH	0.0	20.08	203	HOT	580PP
67	81	0.38	146	P 5	TWD	29	DBC	-2.00	TO+2.00	DBC	DBC			167	COLD	560P2
		0.35	113	P 3	TWD	23	DBC	-1.55		TEC	TEH			6	HOT	600UL
67	85	0.66	137	P 5	TWD	39	DBC	-1.90	TO+0.00	DBC	DBC			167	COLD	560P2
		0.65	84	P 3	TWD	24	DBC	-1.74		TEC	TEH			5	HOT	600UL
67	87	0.31	133	P 5	TWD	25	DBH	-1.65		DBH	DBH			167	COLD	560P2
		0.30	138	P 5	TWD	25	DBH	+1.75		DBH	DBH			167	COLD	560P2
		0.27	56	P 3	TWD	12	DBH	+1.32		TEC	TEH			5	HOT	600UL
		0.19	69	P 3	TWD	9	DBH	-1.76		TEC	TEH			5	HOT	600UL

MAI, MCI, MMI, MVI, SAI, SCI, SVI, 0-100%

QUERY: rpc_icodes_and_0-100%twd.qry

ROW	LINE	VOLTS	DEG	CHN	IND	%TW	LOCATION		EXT	EXT	UTIL 1	UTIL 2	CAL #	LEG	PROBE
67	91	0.26	57	P 1	SCI		TSH	+0.14	TSH	TSH	1.09	18.19	151	HOT	580PP
67	97	0.25	54	P 2	TWD	18	02H	-1.25	TEC	TEH			10	HOT	600UL
67	103	0.21	23	P 1	SCI		TSH	-0.08	TSH	TSH	0.00	19.14	156	HOT	580PP
67	115	0.32	119	2	SAI		02H	-13.72	02H	02H	0.37		248	HOT	580PP
67	129	0.24	146	P 2	TWD	13	VH3	+0.04	TEH	TEC			3	COLD	600UL
		0.18	108	2	SAI		VH3	+0.03	VH3	VH3			169	COLD	560P2
67	155	0.35	161	P 3	TWD	24	DBC	+0.68	TEC	TEH			22	HOT	600UL
67	157	0.32	92	P 2	TWD	15	VH3	-0.80	TEC	TEH			21	HOT	600UL
67	165	0.71	114	P 2	TWD	28	VH3	-0.88	TEC	TEH			25	HOT	600UL
		0.43	79	P 5	TWD	27	VH3	-0.80	VH3	VH3			173	COLD	560P2
68	92	0.33	98	P 2	TWD	16	01H	+0.88	TEC	TEH			5	HOT	600UL
		0.25	134	2	SAI		TSH	+0.46	TSH	TSH	0.0	18.35	151	HOT	580PP
68	94	0.24	104	2	SAI		TSH	+0.77	TSH	TSH	0.25	19.69	150	HOT	580PP
		0.14	91	2	SAI		TSH	+1.18	TSH	TSH	0.00	19.69	150	HOT	580PP
68	114	0.33	19	P 1	SCI		TSH	-10.55	TSH	TSH	0.37	19.98	158	HOT	580PP
68	146	0.43	78	P 2	TWD	20	VC3	-0.88	TEC	TEH			15	HOT	600UL
		0.34	87	P 5	TWD	22	VC3	-0.92	VC3	VC3			173	COLD	560P2
69	13	0.70	86	P 2	TWD	24	VH3	+0.85	TEC	TEH			1	HOT	600UL
		0.59	115	P 2	TWD	22	VH3	-0.87	TEC	TEH			1	HOT	600UL
69	17	0.53	131	P 2	TWD	20	VH3	-0.78	TEC	TEH			7	HOT	600UL
69	19	0.50	133	P 2	TWD	20	VH3	+0.72	TEC	TEH			7	HOT	600UL
69	85	0.27	149	P 5	TWD	23	DBC	-1.75	DBC	DBC			167	COLD	560P2
		0.17	147	P 3	TWD	13	DBC	-1.42	TEC	TEH			6	HOT	600UL
69	101	0.37	22	P 1	SCI		TSH	-0.02	TSH	TSH	0.72	19.04	145	HOT	580PP
69	127	1.13	20	2	SAI		TSH	-12.49	TSH	TSH	1.75	18.15	170	HOT	580PP
69	149	0.12	114	2	SAI		03H	+2.26	03H	03H	0.15		271	HOT	580PP
69	163	0.31	58	P 2	TWD	14	VSM	+0.82	TEC	TEH			21	HOT	600UL
		0.36	109	P 2	TWD	16	VH3	+0.73	TEC	TEH			21	HOT	600UL
70	22	0.43	109	P 2	TWD	20	06H	+0.83	TEC	TEH			8	HOT	600UL
70	24	0.34	79	P 3	TWD	15	DBH	+1.78	TEC	TEH			7	HOT	600UL
70	50	0.13	89	2	SAI		02H	+5.04	02H	02H	0.12		203	HOT	580PP
70	82	0.27	139	P 5	TWD	22	DBC	+1.70	DBC	DBC			167	COLD	560P2
		0.21	153	P 3	TWD	16	DBC	+1.75	TEC	TEH			6	HOT	600UL
70	84	0.12	80	2	SAI		TSH	+1.46	TSH	TSH	0.0	18.45	151	HOT	580PP
70	86	0.27	140	P 5	TWD	23	DBH	-1.50	DBH	DBH			167	COLD	560P2
		0.21	137	P 5	TWD	19	DBH	+1.50	DBH	DBH			167	COLD	560P2
		0.22	93	P 3	TWD	16	DBH	-1.25	TEC	TEH			6	HOT	600UL
70	108	0.64	27	P 1	SCI		TSH	-0.04	TSH	TSH	0.42	19.21	156	HOT	580PP
71	13	0.49	125	P 2	TWD	19	VH3	-0.80	TEC	TEH			1	HOT	600UL
71	19	0.40	147	P 2	TWD	16	VH3	-0.80	TEC	TEH			7	HOT	600UL
71	39	0.21	115	2	SAI		02H	+0.77	02H	02H	.52		263	HOT	580PP
71	85	0.86	126	P 5	TWD	44	DBC	-2.00 TO+1.90	DBC	DBC			167	COLD	560P2
		0.91	70	P 3	TWD	29	DBC	-1.58	TEC	TEH			5	HOT	600UL
		0.33	58	P 2	TWD	16	03H	-1.20	TEC	TEH			5	HOT	600UL

MAI, MCI, MMI, MVI, SAI, SCI, SVI, 0-100%

QUERY: rpc_icodes_and_0-100%twd.qry

ROW	LINE	VOLTS	DEG	CHN	IND	%TW	LOCATION			EXT	EXT	UTIL 1	UTIL 2	CAL #	LEG	PROBE
71	97	0.20	34	P 2	TWD	11	01H	+0.91		TEC	TEH			9	HOT	600UL
71	113	0.38	26	P 1	SCI		TSH	-10.72		TSH	TSH	0.65	19.38	157	HOT	580PP
		0.45	32	P 1	MCI		TSH	-10.09		TSH	TSH	0.46		157	HOT	580PP
71	155	0.20	112	2	SAI		07H	-0.43		07H	07H	0.26		223	HOT	580PP
72	24	0.50	94	P 2	TWD	22	06H	+0.77		TEC	TEH			8	HOT	600UL
		0.18	119	2	SAI		06H	+0.76		06H	06H	0.0		263	HOT	580PP
72	28	0.32	153	P 2	TWD	13	VH3	-1.25		TEC	TEH			13	HOT	600UL
72	70	0.34	59	P 2	TWD	17	VC3	-0.71		TEH	TEC			31	COLD	600UL
72	80	0.24	166	P 3	TWD	11	DBH	+1.88		TEC	TEH			5	HOT	600UL
72	88	0.46	110	P 3	TWD	27	DBC	-1.82		TEC	TEH			6	HOT	600UL
		0.55	135	P 5	TWD	35	DBC	-1.82		DBC	DBC			168	COLD	560P2
72	90	0.33	143	P 2	TWD	20	VSM	+0.62		TEC	TEH			6	HOT	600UL
		0.30	108	P 5	TWD	20	VSM	+0.97		VSM	VSM			168	COLD	560P2
		0.15	119	P 5	TWD	12	VSM	-0.97		VSM	VSM			168	COLD	560P2
72	98	0.32	77	P 2	TWD	20	02H	-1.19		TEC	TEH			10	HOT	600UL
72	160	0.28	120	2	SAI		03H	-0.41		03H	03H	0.36		223	HOT	580PP
		0.43	80	P 2	TWD	18	03H	-1.13		TEC	TEH			21	HOT	600UL
73	17	0.42	128	P 2	TWD	18	VH3	-0.86		TEC	TEH			7	HOT	600UL
73	73	0.37	47	P 2	TWD	19	VC3	+0.38		TEH	TEC			34	COLD	600UL
		0.73	112	P 2	TWD	30	VSM	+0.90		TEH	TEC			34	COLD	600UL
		0.46	94	P 5	TWD	29	VSM	+0.97		VSM	VSM			153	COLD	560P2
		0.37	93	P 5	TWD	25	VC3	+0.22		VC3	VC3			153	COLD	560P2
73	97	0.29	98	2	SAI		TSH	+0.51		TSH	TSH	0.58	18.41	145	HOT	580PP
73	125	0.29	106	P 2	TWD	16	VSM	+0.76		TEH	TEC			3	COLD	600UL
73	133	0.33	99	P 5	TWD	22	VH3	+0.93		VH3	VH3			172	COLD	560P2
		0.30	103	P 2	TWD	20	VH3	+0.87		TEC	TEH			12	HOT	600UL
73	163	0.69	24	P 2	TWD	25	VH3	-0.84		TEC	TEH			21	HOT	600UL
74	74	0.17	124	P 1	SCI		TSH	+0.03		TSH	TSH	0.00	17.83	219	HOT	580PP
74	82	0.36	142	P 5	TWD	28	VSM	+0.84		VSM	VSM			167	COLD	560P2
		0.24	147	P 5	TWD	21	VSM	-0.98		VSM	VSM			167	COLD	560P2
		0.13	136	P 5	TWD	13	VSM	+0.00		VSM	VSM			167	COLD	560P2
		0.51	138	P 2	TWD	29	VSM	+0.84		TEC	TEH			6	HOT	600UL
		0.24	116	P 2	TWD	18	VSM	-0.98		TEC	TEH			6	HOT	600UL
74	120	0.50	17	P 1	SCI		TSH	-11.24		TSH	TSH	0.72	18.93	165	HOT	580PP
74	146	0.69	124	P 2	TWD	32	VC3	+0.91		TEC	TEH			16	HOT	600UL
		0.51	65	P 2	TWD	27	VC3	-0.99		TEC	TEH			16	HOT	600UL
		0.46	136	P 2	TWD	26	VH3	-0.77		TEC	TEH			16	HOT	600UL
		0.44	91	P 5	TWD	26	VH3	-0.89		VH3	VH3			173	COLD	560P2
		0.48	101	P 5	TWD	32	VC3	+0.88		VC3	VC3			175	COLD	560P2
		0.34	98	P 5	TWD	26	VC3	-0.85		VC3	VC3			175	COLD	560P2
74	148	0.16	103	P 5	TWD	10	VH3	-0.89		VH3	VH3			173	COLD	560P2
		0.17	122	P 2	TWD	11	VH3	-0.95		TEC	TEH			20	HOT	600UL
75	17	0.28	127	P 2	TWD	15	VH3	-0.81		TEC	TEH			8	HOT	600UL
75	55	0.17	104	2	SAI		02H	+3.78	TO+14.34	02H	02H	0.24		204	HOT	580PP
		0.38	128	P 3	TWD	15	DBH	+1.94		TEH	TEC			27	COLD	600UL
75	97	0.52	85	2	MAI		TSH	+0.31		TSH	TSH	0.43	18.12	144	HOT	580PP
		0.28	101	2	MAI		TSH	+0.56		TSH	TSH	0.30	18.12	144	HOT	580PP
75	119	0.59	12	2	SAI		TSH	-7.24		TSH	TSH	0.22	17.23	161	HOT	580PP
75	139	0.98	92	P 2	TWD	33	VSM	-0.02		TEC	TEH			15	HOT	600UL
		0.31	128	P 2	TWD	15	VH3	+0.76		TEC	TEH			15	HOT	600UL

MAI, MCI, MMI, MVI, SAI, SCI, SVI, 0-100%

QUERY: rpc_icodes_and_0-100%twd.qry

ROW	LINE	VOLTS	DEG	CHN	IND	%TW	LOCATION		EXT	EXT	UTIL 1	UTIL 2	CAL #	LEG	PROBE
		0.19	19	P 2	TWD	9	VH3	-0.92	TEC	TEH			15	HOT	600UL
		0.78	82	P 5	TWD	39	VSM	+0.12	VSM	VSM			173	COLD	560P2
		0.26	142	P 5	TWD	21	VH3	+0.89	VH3	VH3			173	COLD	560P2
		0.15	138	P 5	TWD	13	VH3	-0.85	VH3	VH3			173	COLD	560P2
75	141	0.20	131	P 5	TWD	16	VH3	-0.91	VH3	VH3			173	COLD	560P2
		0.25	132	P 2	TWD	20	VH3	-0.89	TEC	TEH			16	HOT	600UL
76	26	0.30	132	2	SAI		08H	-0.24	08H	08H	.54		263	HOT	580PP
76	34	0.28	91	P 2	TWD	10	01H	+1.19	TEC	TEH			13	HOT	600UL
76	62	0.46	12	2	SAI		08H	-0.02	08H	08H	0.50		208	HOT	580PP
76	84	0.14	115	P 5	TWD	14	VH3	+0.90	VH3	VH3			167	COLD	560P2
		0.19	127	P 5	TWD	18	VH3	-0.90	VH3	VH3			167	COLD	560P2
		0.30	73	P 2	TWD	15	VH3	-0.86	TEC	TEH			5	HOT	600UL
		0.22	83	P 2	TWD	12	VH3	+0.84	TEC	TEH			5	HOT	600UL
76	86	0.27	140	P 5	TWD	23	DBC	+1.75	DBC	DBC			167	COLD	560P2
		0.18	162	P 3	TWD	8	DBC	+2.00	TEC	TEH			5	HOT	600UL
76	88	0.39	68	P 2	TWD	19	03H	-1.25	TEC	TEH			5	HOT	600UL
76	100	0.25	58	P 2	TWD	14	VC3	-0.88	TEC	TEH			9	HOT	600UL
76	124	0.22	96	P 2	TWD	12	VC3	-0.74	TEH	TEC			3	COLD	600UL
76	134	0.37	126	P 2	TWD	17	VH3	+0.69	TEC	TEH			11	HOT	600UL
77	19	0.25	129	P 2	TWD	13	VH3	+0.81	TEC	TEH			8	HOT	600UL
77	31	0.41	147	P 2	TWD	16	VSM	+0.80	TEC	TEH			13	HOT	600UL
		0.28	90	P 2	TWD	12	VSM	+0.29	TEC	TEH			13	HOT	600UL
		0.15	61	P 5	TWD	11	VSM	+0.38	VSM	VSM			154	COLD	560P2
		0.25	94	P 5	TWD	19	VSM	+0.89	VSM	VSM			154	COLD	560P2
77	33	0.62	87	P 2	TWD	22	VSM	+0.80	TEC	TEH			13	HOT	600UL
		0.30	104	P 5	TWD	22	VSM	+0.79	VSM	VSM			154	COLD	560P2
77	39	0.36	166	P 3	TWD	19	DBC	+1.62	TEC	TEH			18	HOT	600UL
		0.30	95	P 5	TWD	20	DBC	+1.59	DBC	DBC			152	COLD	560P2
77	91	0.14	87	P 1	SCI		TSH	+0.08	TSH	TSH	0.30	19.60	150	HOT	580PP
77	125	0.15	9	P 3	TWD	8	DBH	-2.24	TEH	TEC			3	COLD	600UL
77	159	0.27	88	P 2	TWD	12	VH3	-0.82	TEC	TEH			21	HOT	600UL
78	22	0.39	49	P 3	TWD	18	DBC	-1.88	TEC	TEH			8	HOT	600UL
		0.60	86	P 2	TWD	25	VC3	-0.89	TEC	TEH			8	HOT	600UL
		0.51	97	P 5	TWD	29	DBC	-1.80	DBC	DBC			151	COLD	560P2
		0.44	104	P 5	TWD	27	VC3	-0.82	VC3	VC3			161	COLD	560P2
78	32	0.19	68	P 3	TWD	10	DBC	-1.38	TEC	TEH			14	HOT	600UL
		0.11	90	P 5	TWD	8	DBC	-1.22	DBC	DBC			154	COLD	560P2
78	68	0.42	18	P 1	SCI		TSH	-0.14	TSH	TSH	0.40	17.82	207	HOT	580PP
78	80	0.63	26	P 1	SCI		TSH	-0.06	TSH	TSH	0.53	18.40	151	HOT	580PP
78	120	0.27	114	P 2	TWD	16	VC3	+0.84	TEH	TEC			4	COLD	600UL
78	136	0.21	116	P 5	TWD	15	DBH	-2.15	DBH	DBH			172	COLD	560P2
		0.29	58	P 3	TWD	20	DBH	-2.15	TEC	TEH			12	HOT	600UL
78	138	0.21	103	P 5	TWD	15	DBC	+1.70	DBC	DBC			173	COLD	560P2
		0.19	17	P 3	TWD	15	DBC	+1.74	TEC	TEH			12	HOT	600UL
78	142	0.36	97	P 5	TWD	23	VH3	+0.92	VH3	VH3			173	COLD	560P2
		0.24	129	P 2	TWD	16	VH3	+0.89	TEC	TEH			16	HOT	600UL
78	144	0.39	56	P 3	TWD	24	DBC	+1.84	TEC	TEH			16	HOT	600UL
		0.41	86	P 5	TWD	25	DBC	+1.64	DBC	DBC			173	COLD	560P2
78	148	0.28	73	P 5	TWD	22	08C	-0.83	08C	08C			136	COLD	580PP

MAI, MCI, MMI, MVI, SAI, SCI, SVI, 0-100%

QUERY: rpc_icodes_and_0-100%twd.qry

ROW	LINE	VOLTS	DEG	CHN	IND	%TW	LOCATION		EXT	EXT	UTIL 1	UTIL 2	CAL #	LEG	PROBE
		0.33	145	P 2	TWD	20	08C	-0.84	TEC	TEH			20	HOT	600UL
78	154	0.18	139	P 5	TWD	16	VC3	-0.85	VC3	VC3			175	COLD	560P2
		0.27	133	P 5	TWD	22	VC3	+0.86	VC3	VC3			175	COLD	560P2
		0.31	150	P 2	TWD	19	VC3	+0.87	TEC	TEH			20	HOT	600UL
79	15	0.42	21	P 3	TWD	17	DBH	+1.46	TEC	TEH			1	HOT	600UL
		0.19	88	P 5	TWD	16	DBH	+1.49	DBH	DBH			146	COLD	560P2
79	19	0.25	69	P 3	TWD	11	DBC	+1.75	TEC	TEH			7	HOT	600UL
		0.31	91	P 5	TWD	20	DBC	+1.76	DBC	DBC			151	COLD	560P2
79	23	0.28	65	P 3	TWD	12	DBC	+1.75	TEC	TEH			7	HOT	600UL
		0.37	100	P 5	TWD	23	DBC	+1.80	DBC	DBC			151	COLD	560P2
79	27	0.21	111	2	SAI		06H	-0.16	06H	06H	0.0		263	HOT	580PP
79	75	0.41	74	P 2	TWD	18	VH3	+0.80	TEH	TEC			33	COLD	600UL
79	143	0.14	121	P 3	TWD	11	DBC	-1.41	TEC	TEH			16	HOT	600UL
		0.18	105	P 5	TWD	12	DBC	-1.57	DBC	DBC			173	COLD	560P2
79	155	0.28	145	P 2	TWD	13	VSM	+0.74	TEC	TEH			21	HOT	600UL
80	78	0.35	91	P 1	SCI		TSH	+0.07	TSH	TSH	0.23	19.30	150	HOT	580PP
80	80	0.29	98	P 2	TWD	15	VSM	-0.82	TEC	TEH			5	HOT	600UL
80	86	0.49	22	P 1	SCI		TSH	-0.02	TSH	TSH	0.61	19.18	150	HOT	580PP
		0.17	121	P 5	TWD	16	DBC	+2.00	DBC	DBC			167	COLD	560P2
		0.15	147	P 3	TWD	7	DBC	+2.00	TEC	TEH			5	HOT	600UL
80	88	0.16	97	P 3	TWD	12	DBC	-1.75	TEC	TEH			6	HOT	600UL
		0.14	147	P 5	TWD	14	DBC	-1.75	DBC	DBC			168	COLD	560P2
80	104	0.28	82	P 2	TWD	14	VH3	+1.13	TEH	TEC			7	COLD	600UL
		0.28	20	P 1	SCI		TSH	-0.10	TSH	TSH	0.16	19.80	152	HOT	580PP
80	112	0.22	105	P 5	TWD	16	VSM	-0.81	VSM	VSM			169	COLD	560P2
		0.33	120	P 2	TWD	19	VSM	-0.68	TEH	TEC			5	COLD	600UL
80	120	0.16	102	2	SAI		02H	-7.76	02H	02H	0.25		248	HOT	580PP
81	23	0.39	36	P 3	TWD	16	DBC	+1.84	TEC	TEH			23	HOT	600UL
		0.32	97	P 5	TWD	21	DBC	+1.55	DBC	DBC			157	COLD	560P2
81	109	0.37	84	P 3	TWD	17	DBC	+1.82	TEH	TEC			16	COLD	600UL
81	151	0.29	105	P 5	TWD	16	VH3	+0.63	VH3	VH3			350	HOT	560P2
		0.18	92	P 5	TWD	10	VH3	-0.23	VH3	VH3			350	HOT	560P2
		0.25	119	P 2	TWD	17	VH3	+0.60	TEC	TEH			37	HOT	600UL
82	54	0.55	133	P 2	TWD	24	VH3	-0.92	TEH	TEC			35	COLD	600UL
		0.14	103	P 2	TWD	8	VH3	+1.17	TEH	TEC			35	COLD	600UL
		0.42	91	P 5	TWD	27	VH3	-0.94	VH3	VH3			336	HOT	560P2
		0.23	89	P 5	TWD	17	VH3	+1.12	VH3	VH3			336	HOT	560P2
82	82	0.33	14	P 1	SCI		TSH	-13.89	TSH	TSH	0.86	18.12	274	HOT	580PP
82	84	0.63	22	P 1	MCI		TSH	-13.09	TSH	TSH	0.68	18.35	278	HOT	580PP
82	104	0.33	36	P 1	SCI		TSH	-0.09	TSH	TSH	0.38	18.24	294	HOT	580PP
82	114	0.56	19	P 1	SCI		TSH	-0.08	TSH	TSH	0.32	19.83	286	HOT	580PP
82	160	0.34	121	P 3	TWD	13	DBH	+1.65	TEC	TEH			36	HOT	600UL
		0.32	93	P 5	TWD	17	DBH	+2.23	DBH	DBH			350	HOT	560P2
83	59	0.24	16	P 1	SCI		TSH	-0.17	TSH	TSH	0.07	18.76	308	HOT	580PP
83	63	0.49	22	P 1	SCI		TSH	-0.12	TSH	TSH	0.51	18.97	312	HOT	580PP
83	121	0.46	16	P 1	SCI		TSH	-9.02	TSH	TSH	0.45	19.91	280	HOT	580PP
84	48	0.37	79	P 2	TWD	19	09C	+0.16	TEH	TEC			34	COLD	600UL

MAI, MCI, MMI, MVI, SAI, SCI, SVI, 0-100%

QUERY: rpc_icodes_and_0-100%twd.qry

ROW	LINE	VOLTS	DEG	CHN	IND	%TW	LOCATION		EXT	EXT	UTIL 1	UTIL 2	CAL #	LEG	PROBE
84	114	0.32	131	P 2	TWD	17	09C	+0.00	TEH	TEC			15	COLD	600UL
85	91	0.36	73	P 2	TWD	19	09H	-1.22	TEH	TEC			51	COLD	600UL
85	95	0.36	23	P 1	SCI		TSH	-0.23	TSH	TSH	0.0	18.57	288	HOT	580PP
85	119	0.42	91	P 2	TWD	21	09H	+1.65	TEH	TEC		LOCOK	12	COLD	600UL
85	123	0.35	107	P 2	TWD	18	09C	+1.16	TEH	TEC			12	COLD	600UL
85	127	0.23	37	P 3	TWD	10	DBH	-1.77	TEH	TEC			10	COLD	600UL
85	141	0.32	131	P 2	TWD	21	09H	+1.19	TEC	TEH			32	HOT	600UL
86	32	0.24	165	P 3	TWD	9	DBC	+1.02	TEC	TEH			27	HOT	600UL
		0.24	94	P 5	TWD	14	DBC	+1.45	DBC	09C			156	COLD	560P2
86	112	0.39	51	P 2	TWD	19	VH2	+0.73	TEH	TEC			15	COLD	600UL
86	130	0.21	125	P 2	TWD	15	VC2	+0.74	TEC	TEH			30	HOT	600UL
87	29	0.36	162	P 3	TWD	17	DBC	+1.96	TEC	TEH			24	HOT	600UL
87	35	0.54	145	P 2	TWD	18	VH2	-0.96	TEC	TEH			27	HOT	600UL
87	37	0.23	57	P 2	TWD	10	VH2	+0.79	TEC	TEH			28	HOT	600UL
		0.37	119	P 2	TWD	16	VH2	-0.93	TEC	TEH			28	HOT	600UL
87	39	0.24	131	P 2	TWD	11	VH2	-1.24	TEC	TEH			28	HOT	600UL
87	43	0.32	170	P 3	TWD	18	DBH	+1.29	TEC	TEH			28	HOT	600UL
87	59	0.92	29	P 1	SCI		TSH	-10.53	TSH	TSH	1.19	18.77	308	HOT	580PP
87	83	0.40	18	P 1	SCI		TSH	-16.77	TSH	TSH	0.23	17.87	274	HOT	580PP
87	125	0.43	96	P 2	TWD	20	VH2	-0.89	TEH	TEC			10	COLD	600UL
87	129	0.41	148	P 2	TWD	19	VH2	-0.85	TEH	TEC			10	COLD	600UL
88	34	0.36	142	P 2	TWD	13	VH2	-1.14	TEC	TEH			27	HOT	600UL
88	48	0.45	89	P 2	TWD	22	VH2	-0.77	TEH	TEC			34	COLD	600UL
88	52	0.15	163	P 3	TWD	10	DBH	+1.85	TEH	TEC			36	COLD	600UL
88	108	0.32	82	P 2	TWD	17	VH2	-0.87	TEH	TEC			17	COLD	600UL
88	150	0.26	15	P 2	TWD	17	06H	-0.41	TEC	TEH	LAR		37	HOT	600UL
		0.23	108	P 5	TWD	13	06H	-0.38	06H	06H			226	HOT	580PP
89	33	0.36	118	P 2	TWD	15	VH2	-0.99	TEC	TEH			28	HOT	600UL
89	35	0.50	117	P 2	TWD	17	VH2	-0.98	TEC	TEH			27	HOT	600UL
89	37	0.70	138	P 2	TWD	21	VH2	-1.24	TEC	TEH			27	HOT	600UL
89	45	0.35	51	P 2	TWD	15	VH2	-1.24	TEC	TEH			28	HOT	600UL
89	57	0.25	158	P 3	TWD	15	DBH	+1.55	TEH	TEC			36	COLD	600UL
89	73	0.35	126	P 2	TWD	17	VC2	-0.73	TEH	TEC			40	COLD	600UL
89	99	0.70	23	P 1	MCI		TSH	-0.10	TSH	TSH	0.36	18.62	293	HOT	580PP
89	123	0.39	113	P 2	TWD	20	VH2	-0.79	TEH	TEC			12	COLD	600UL
89	125	0.34	59	P 2	TWD	19	VH2	-0.82	TEH	TEC			11	COLD	600UL
89	127	0.40	135	P 2	TWD	19	VH2	-0.79	TEH	TEC			10	COLD	600UL
89	137	0.22	84	P 2	TWD	16	VH2	-0.94	TEC	TEH			30	HOT	600UL
89	141	0.22	69	P 2	TWD	16	VH2	+0.73	TEC	TEH			32	HOT	600UL
89	143	0.30	76	P 2	TWD	14	VH2	-0.81	TEC	TEH			31	HOT	600UL

MAI, MCI, MMI, MVI, SAI, SCI, SVI, 0-100%

QUERY: rpc_icodes_and_0-100%twd.qry

ROW	LINE	VOLTS	DEG	CHN	IND	%TW	LOCATION		EXT	EXT	UTIL 1	UTIL 2	CAL #	LEG	PROBE
89	157	0.38	162	P 3	TWD	14	DBH	+1.37	TEC	TEH			36	HOT	600UL
		0.27	90	P 5	TWD	14	DBH	+1.82	DBH	DBH			350	HOT	560P2
90	22	0.47	137	P 2	TWD	19	07C	-1.12	TEC	TEH			23	HOT	600UL
90	78	0.47	103	P 2	TWD	22	03H	-1.15	TEH	TEC			48	COLD	600UL
90	94	0.54	66	P 2	TWD	22	03H	-1.25	TEH	TEC			52	COLD	600UL
91	23	0.41	112	P 2	TWD	17	VH2	-0.98	TEC	TEH			23	HOT	600UL
91	53	0.34	88	P 2	TWD	17	02H	+0.84	TEH	TEC			35	COLD	600UL
91	97	0.69	23	P 1	SCI		TSH	-0.08	TSH	TSH	0.81	18.37	292	HOT	580PP
91	129	0.22	29	P 3	TWD	10	DBH	-1.81	TEH	TEC			10	COLD	600UL
92	26	0.52	62	P 2	TWD	23	VH2	-0.75	TEC	TEH			24	HOT	600UL
92	32	0.45	143	P 2	TWD	15	VSM	-0.83	TEC	TEH			27	HOT	600UL
92	36	0.85	93	P 2	TWD	24	VH2	-1.22	TEC	TEH			27	HOT	600UL
92	46	0.26	139	P 2	TWD	12	VSM	+0.76	TEC	TEH			28	HOT	600UL
93	27	0.35	113	P 2	TWD	17	VH2	-0.91	TEC	TEH			24	HOT	600UL
93	31	0.53	141	P 2	TWD	17	VH2	-1.22	TEC	TEH			27	HOT	600UL
93	33	0.38	98	P 2	TWD	16	VH2	-1.03	TEC	TEH			28	HOT	600UL
93	51	0.36	109	P 2	TWD	19	VH2	-0.78	TEH	TEC			36	COLD	600UL
93	55	0.24	80	2	SAI		04H	-0.15	04H	04H	0.00		302	HOT	580PP
93	139	0.29	142	P 2	TWD	19	VH2	-0.89	TEC	TEH			32	HOT	600UL
93	153	0.12	100	P 5	TWD	11	03C	+0.90	03C	03C			136	COLD	580PP
		0.35	91	P 5	TWD	25	05C	-0.92	05C	05C			136	COLD	580PP
		0.29	100	P 2	TWD	19	03C	+0.92	TEC	TEH			37	HOT	600UL
		0.31	40	P 2	TWD	20	05C	+0.00	TEC	TEH			37	HOT	600UL
94	24	0.43	114	P 2	TWD	18	VH2	+0.20	TEC	TEH			23	HOT	600UL
94	32	0.17	82	2	SAI		06H	+0.66	06H	06H	0.19		267	HOT	580PP
		0.51	46	P 2	TWD	17	06H	+0.02	TEC	TEH			27	HOT	600UL
		0.68	129	P 2	TWD	21	VH2	-1.12	TEC	TEH			27	HOT	600UL
		0.42	119	P 2	TWD	14	06H	+0.61	TEC	TEH			27	HOT	600UL
94	36	0.69	77	P 2	TWD	21	VH2	-1.25	TEC	TEH			27	HOT	600UL
94	84	0.21	102	P 2	TWD	12	VH3	+0.84	TEH	TEC			48	COLD	600UL
95	25	0.63	119	P 2	TWD	24	VH2	-1.14	TEC	TEH			23	HOT	600UL
		0.26	116	P 5	TWD	18	03H	+0.76	03H	03H			267	HOT	580PP
95	33	0.39	109	2	SAI		06H	-0.03	06H	06H	0.00		267	HOT	580PP
95	39	0.39	120	P 2	TWD	14	VSM	+0.63	TEC	TEH			27	HOT	600UL
96	142	0.23	110	P 2	TWD	16	VH2	-0.93	TEC	TEH			32	HOT	600UL
96	150	0.31	131	P 2	TWD	20	VH2	-0.82	TEC	TEH			37	HOT	600UL
97	109	0.39	102	2	SAI		06C	-8.38	06C	06C	0.33		137	COLD	580PP
97	139	0.24	73	P 2	TWD	16	VSM	-0.21	TEC	TEH			32	HOT	600UL
98	30	0.29	103	2	SAI		06H	+0.79	06H	06H	0.63		267	HOT	580PP
98	56	3.20	33	P 1	SCI		TSH	-14.48	TSH	TSH	4.03	18.41	305	HOT	580PP
98	74	0.19	157	P 2	TWD	11	VC2	+0.77	TEH	TEC			39	COLD	600UL
98	130	0.21	43	P 2	TWD	15	VH2	-0.95	TEC	TEH			30	HOT	600UL

MAI, MCI, MMI, MVI, SAI, SCI, SVI, 0-100%

QUERY: rpc_icodes_and_0-100%twd.qry

ROW	LINE	VOLTS	DEG	CHN	IND	%TW	LOCATION		EXT	EXT	UTIL 1	UTIL 2	CAL #	LEG	PROBE
99	75	0.76	24	P 1	SCI		TSH	-0.11	TSH	TSH	0.00	18.42	317	HOT	580PP
99	121	0.23	87	P 2	TWD	14	VH2	-0.90	TEH	TEC			13	COLD	600UL
99	123	0.19	119	P 2	TWD	11	VC2	+0.75	TEH	TEC			13	COLD	600UL
99	131	0.34	119	P 2	TWD	22	VH3	-0.81	TEC	TEH			30	HOT	600UL
		0.22	99	P 5	TWD	12	VH3	+0.88	VH3	VH3			350	HOT	560P2
		0.35	96	P 5	TWD	18	VH3	-0.86	VH3	VH3			350	HOT	560P2
100	150	0.39	52	P 2	TWD	23	VH2	+0.90	TEC	TEH			37	HOT	600UL
101	27	0.50	138	P 2	TWD	20	VH2	+0.59	TEC	TEH			23	HOT	600UL
101	147	0.37	92	P 5	TWD	21	VSM	-0.66	VSM	VSM			350	HOT	560P2
		0.46	61	P 2	TWD	20	VSM	-0.66	TEC	TEH			31	HOT	600UL
102	26	0.30	74	P 5	TWD	16	06H	+0.81	06H	06H			267	HOT	580PP
		0.37	111	P 2	TWD	18	06H	+0.81	TEC	TEH			24	HOT	600UL
102	140	0.25	91	P 3	TWD	18	DBC	+1.91	TEC	TEH			32	HOT	600UL
		0.35	61	P 2	TWD	22	VH2	-0.98	TEC	TEH			32	HOT	600UL
104	40	0.45	170	P 3	TWD	23	DBC	+2.06	TEC	TEH			28	HOT	600UL
		0.33	64	P 5	TWD	19	DBC	+2.13	DBC	DBC			156	COLD	560P2
106	30	0.35	109	P 2	TWD	15	06H	+0.76	TEC	TEH			23	HOT	600UL
		0.28	80	P 5	TWD	15	06H	+0.83	06H	06H			267	HOT	580PP
106	78	0.19	96	P 5	TWD	12	VC2	+1.05	VC2	VC2			157	COLD	560P2
		0.23	82	P 5	TWD	14	VC2	-0.66	VC2	VC2	APN		157	COLD	560P2
		0.26	148	P 2	TWD	14	VC2	+0.94	TEC	TEH			129	HOT	600UL
		0.20	156	P 2	TWD	11	VC2	-0.76	TEC	TEH			129	HOT	600UL
106	140	0.35	122	P 3	TWD	23	DBC	+1.68	TEC	TEH			32	HOT	600UL
107	29	0.29	70	P 5	TWD	20	DBC	+1.67	DBC	DBC	APN		157	COLD	560P2
		0.49	163	P 3	TWD	22	DBC	+1.72	TEC	TEH			24	HOT	600UL
107	97	0.18	99	P 5	TWD	13	VH3	-0.86	VH3	VH3			356	HOT	560P2
		0.23	126	P 2	TWD	12	VH3	-0.86	TEH	TEC			53	COLD	600UL
107	125	0.15	66	P 3	TWD	7	DBH	-1.42	TEH	TEC			10	COLD	600UL
		0.15	84	P 5	TWD	9	DBH	-1.55	DBH	DBH			355	HOT	560P2
108	36	0.32	93	P 5	TWD	19	DBC	-1.94	DBC	DBC			157	COLD	560P2
		0.33	106	P 3	TWD	19	DBC	-1.40	TEC	TEH			28	HOT	600UL
110	138	0.26	124	P 2	TWD	18	VC3	-0.96	TEC	TEH			30	HOT	600UL
		0.29	98	P 5	TWD	21	VC3	-0.90	VC3	VC3			163	COLD	560P2
110	144	0.35	158	P 3	TWD	23	DBC	+2.24	TEC	TEH			32	HOT	600UL
111	33	0.39	101	P 2	TWD	14	03H	-0.77	TEC	TEH			27	HOT	600UL
111	37	0.43	38	P 3	TWD	15	DBH	+1.51	TEC	TEH			27	HOT	600UL
		0.35	95	P 5	TWD	24	DBH	+1.80	DBH	DBH			325	HOT	560P2
111	39	0.36	173	P 3	TWD	20	DBH	+1.55	TEC	TEH			28	HOT	600UL
111	101	0.19	50	P 3	TWD	7	DBH	-0.69	TEH	TEC			52	COLD	600UL
		0.18	100	P 5	TWD	13	DBH	-0.95	DBH	DBH			356	HOT	560P2
112	116	0.20	118	P 2	TWD	12	VH3	-0.83	TEH	TEC			15	COLD	600UL
		0.16	101	P 5	TWD	9	VH3	-0.77	VH3	VH3	AIC		355	HOT	560P2
112	144	0.48	98	P 5	TWD	24	DBH	+2.00	DBH	DBH			350	HOT	560P2
		0.55	165	P 3	TWD	19	DBH	+1.83	TEC	TEH			31	HOT	600UL
113	37	0.26	126	P 2	TWD	11	VH2	-0.99	TEC	TEH			28	HOT	600UL
		0.18	96	P 5	TWD	14	VH2	-0.99	VH2	VH2			325	HOT	560P2
113	39	0.51	116	P 3	TWD	18	DBH	+1.19	TEC	TEH			27	HOT	600UL
		0.46	96	P 5	TWD	29	DBH	+2.00	DBH	DBH			325	HOT	560P2

MAI, MCI, MMI, MVI, SAI, SCI, SVI, 0-100%

QUERY: rpc_icodes_and_0-100%twd.qry

ROW	LINE	VOLTS	DEG	CHN	IND	%TW	LOCATION		EXT	EXT	UTIL 1	UTIL 2	CAL #	LEG	PROBE
113	41	0.71	103	P 2	TWD	22	VH2	-0.60	TEC	TEH			27	HOT	600UL
		0.35	94	P 5	TWD	25	VH2	-0.74	VH2	VH2	AIC		327	HOT	560P2
114	38	0.34	150	P 2	TWD	12	06C	-0.83	TEC	TEH			27	HOT	600UL
114	96	0.17	88	P 5	TWD	12	VH3	-0.82	VH3	VH3			356	HOT	560P2
		0.28	123	P 2	TWD	14	VH3	-0.82	TEH	TEC			53	COLD	600UL
114	110	0.27	55	P 3	TWD	16	DBH	-1.42	TEH	TEC			15	COLD	600UL
		0.33	91	P 5	TWD	18	DBH	-1.42	DBH	DBH			352	HOT	560P2
115	41	0.39	163	P 3	TWD	21	DBC	+1.53	TEC	TEH			28	HOT	600UL
115	53	0.24	64	P 2	TWD	13	02H	+0.92	TEH	TEC			35	COLD	600UL
115	69	0.32	37	P 2	TWD	16	01H	+0.83	TEH	TEC			40	COLD	600UL
115	109	0.30	79	P 2	TWD	15	01H	+0.88	TEH	TEC			17	COLD	600UL
115	129	0.29	107	P 2	TWD	15	VH2	-0.74	TEH	TEC			10	COLD	600UL
116	68	0.29	42	P 2	TWD	15	08H	-1.10	TEH	TEC			39	COLD	600UL
116	102	0.33	131	P 3	TWD	16	DBH	+0.57	TEH	TEC			16	COLD	600UL
		0.25	99	P 5	TWD	14	DBH	+0.62	DBH	10H			367	HOT	560P2
117	49	0.11	118	2	SAI		06H	+2.77	06H	06H	0.11		300	HOT	580PP
117	71	0.46	111	P 2	TWD	21	VH1	-0.83	TEH	TEC			39	COLD	600UL
117	115	0.30	50	P 2	TWD	16	01H	+0.86	TEH	TEC			15	COLD	600UL
118	88	0.20	141	P 3	TWD	8	DBH	-1.71	TEH	TEC			50	COLD	600UL
		0.14	103	P 5	TWD	10	DBH	-1.75	DBH	DBH			354	HOT	560P2
118	90	0.17	22	P 3	TWD	8	DBH	-1.70	TEH	TEC			50	COLD	600UL
119	37	0.19	115	P 5	TWD	11	DBC	+1.94	DBC	DBC			157	COLD	560P2
		0.30	95	P 5	TWD	18	DBC	-1.74	DBC	DBC			157	COLD	560P2
		0.51	18	P 3	TWD	18	DBC	+1.57	TEC	TEH			27	HOT	600UL
		0.22	19	P 3	TWD	9	DBC	-1.78	TEC	TEH	LAR		27	HOT	600UL
119	41	0.44	146	P 2	TWD	18	09H	-1.07	TEC	TEH			28	HOT	600UL
		0.41	144	P 2	TWD	17	VH1	-1.13	TEC	TEH			28	HOT	600UL
119	45	0.41	152	P 2	TWD	17	VH1	-0.97	TEC	TEH			28	HOT	600UL
119	55	0.34	80	P 5	TWD	23	DBH	+2.14	DBH	DBH			336	HOT	560P2
		0.29	68	P 3	TWD	13	DBH	+2.09	TEH	TEC			35	COLD	600UL
119	57	0.43	39	P 2	TWD	20	01H	-0.29	TEH	TEC			35	COLD	600UL
119	59	0.31	105	P 2	TWD	17	VH1	-1.03	TEH	TEC			37	COLD	600UL
119	61	0.38	144	P 2	TWD	19	VH1	-0.89	TEH	TEC			38	COLD	600UL
119	63	0.60	128	P 2	TWD	26	VH1	-0.96	TEH	TEC			38	COLD	600UL
119	65	0.43	142	P 2	TWD	21	VH1	-0.96	TEH	TEC			38	COLD	600UL
119	67	0.40	136	P 2	TWD	20	VH1	-0.77	TEH	TEC			38	COLD	600UL
119	69	0.38	139	P 2	TWD	18	VH1	-0.84	TEH	TEC			40	COLD	600UL
119	71	0.42	148	P 2	TWD	19	VH1	-0.84	TEH	TEC			40	COLD	600UL
119	79	0.45	98	P 5	TWD	30	DBH	+1.98	DBH	DBH			354	HOT	560P2
		0.35	92	P 3	TWD	17	DBH	+2.00	TEH	TEC			48	COLD	600UL
119	81	0.51	105	P 2	TWD	23	VH1	-0.95	TEH	TEC			48	COLD	600UL
119	95	0.42	115	P 3	TWD	15	DBH	-0.81	TEH	TEC			52	COLD	600UL
		0.42	107	P 2	TWD	18	VH1	-0.99	TEH	TEC			52	COLD	600UL
		0.44	97	P 5	TWD	25	DBH	-1.60	DBH	DBH			356	HOT	560P2
119	97	0.42	69	P 2	TWD	18	VH1	-0.95	TEH	TEC			52	COLD	600UL

MAI, MCI, MMI, MVI, SAI, SCI, SVI, 0-100%

QUERY: rpc_icodes_and_0-100%twd.qry

ROW	LINE	VOLTS	DEG	CHN	IND	%TW	LOCATION		EXT	EXT	UTIL 1	UTIL 2	CAL #	LEG	PROBE
		0.33	128	P 3	TWD 12	DBH		-1.70	TEH	TEC			52	COLD	600UL
		0.26	104	P 5	TWD 17	DBH		-1.70	DBH	DBH			356	HOT	560P2
119	99	0.33	86	P 3	TWD 12	DBH		-1.42	TEH	TEC			52	COLD	600UL
		0.44	127	P 2	TWD 19	VH1		-0.98	TEH	TEC			52	COLD	600UL
		0.31	100	P 5	TWD 20	DBH		-1.90	DBH	DBH			356	HOT	560P2
119	101	0.26	134	P 3	TWD 7	DBH		-1.75	TEH	TEC			52	COLD	600UL
		0.37	96	P 5	TWD 23	DBH		-1.75	DBH	DBH			356	HOT	560P2
119	109	0.47	11	P 3	TWD 24	DBH		+1.87	TEH	TEC	LAR		17	COLD	600UL
		0.34	97	P 5	TWD 18	DBH		+1.91	DBH	DBH			352	HOT	560P2
119	111	0.52	138	P 3	TWD 26	DBH		+2.04	TEH	TEC			15	COLD	600UL
		0.48	73	P 2	TWD 22	VH1		-0.64	TEH	TEC			15	COLD	600UL
		0.40	105	P 5	TWD 21	DBH		+2.04	DBH	DBH			352	HOT	560P2
120	38	0.31	93	P 5	TWD 19	DBC		+2.11	DBC	10C			157	COLD	560P2
		0.24	89	P 5	TWD 15	DBC		-1.68	DBC	10C			157	COLD	560P2
		0.29	134	P 3	TWD 11	DBC		+1.83	TEC	TEH			27	HOT	600UL
		0.25	97	P 3	TWD 10	DBC		-1.63	TEC	TEH			27	HOT	600UL
120	42	0.41	128	P 2	TWD 17	VH1		-1.17	TEC	TEH			28	HOT	600UL
120	50	0.31	153	P 2	TWD 16	VH1		-0.86	TEH	TEC			34	COLD	600UL
120	66	0.61	88	P 5	TWD 33	DBH		-2.07	DBH	10H			336	HOT	560P2
		0.43	117	P 3	TWD 21	DBH		-1.34	TEH	TEC			38	COLD	600UL
120	74	0.25	97	P 2	TWD 13	10H		-1.23	TEH	TEC			40	COLD	600UL
		0.23	104	P 5	TWD 15	10H		-1.18	10H	10H			317	HOT	580PP
120	80	0.49	80	P 5	TWD 24	DBH		-1.86	VH1	09H	ARS		195	HOT	560P2
		0.23	41	P 3	TWD 12	DBH		-1.90	TEH	TEC			48	COLD	600UL
120	86	0.22	63	P 3	TWD 10	DBH		-0.99	TEH	TEC			50	COLD	600UL
		0.28	133	P 2	TWD 13	10H		+1.25	TEH	TEC			50	COLD	600UL
		0.37	74	P 5	TWD 20	DBH		-1.75	VH1	09H			195	HOT	560P2
		0.27	85	P 5	TWD 15	10H		+1.50	VH1	09H			195	HOT	560P2
120	88	0.29	52	P 2	TWD 16	03H		-0.12	TEH	TEC		AAS	51	COLD	600UL
120	92	0.31	101	P 3	TWD 12	DBH		-2.14	TEH	TEC			50	COLD	600UL
		0.34	98	P 5	TWD 21	DBH		-1.92	DBH	DBH			356	HOT	560P2
120	94	0.11	112	P 3	TWD 8	DBH		-1.79	TEH	TEC			53	COLD	600UL
		0.23	69	P 5	TWD 13	DBH		-1.77	VH1	09H			195	HOT	560P2
120	106	0.47	23	P 3	TWD 21	DBH		+1.64	TEH	TEC			16	COLD	600UL
		0.52	77	P 5	TWD 25	DBH		+1.94	DBH	DBH			352	HOT	560P2
120	114	0.23	93	P 3	TWD 15	DBH		-1.85	TEH	TEC			15	COLD	600UL
120	120	0.25	93	P 2	TWD 14	VH1		-0.82	TEH	TEC			12	COLD	600UL
120	138	0.49	96	P 5	TWD 25	DBH		-2.03	10H	DBH			350	HOT	560P2
		0.45	108	P 3	TWD 18	DBH		-1.57	TEC	TEH			29	HOT	600UL
121	39	0.24	122	P 5	TWD 18	03C		-0.99	03C	03C			135	COLD	580PP
		0.56	94	P 2	TWD 18	03C		-0.94	TEC	TEH			27	HOT	600UL
121	43	0.53	157	P 2	TWD 20	VH1		-0.95	TEC	TEH			28	HOT	600UL
121	59	0.46	142	P 2	TWD 22	VH1		-0.96	TEH	TEC			38	COLD	600UL
121	67	0.18	107	P 5	TWD 15	DBH		-1.97	DBH	10H			336	HOT	560P2
		0.13	43	P 3	TWD 7	DBH		-1.68	TEH	TEC			37	COLD	600UL
121	75	0.41	133	P 2	TWD 20	VH1		-0.92	TEH	TEC			40	COLD	600UL
121	83	0.44	113	P 2	TWD 22	VH1		-0.92	TEH	TEC			49	COLD	600UL
121	99	0.49	138	P 2	TWD 22	VH1		-0.94	TEH	TEC			53	COLD	600UL
121	103	0.41	120	P 2	TWD 20	VH1		-0.83	TEH	TEC			17	COLD	600UL
		0.32	79	P 2	TWD 16	VH1		+0.85	TEH	TEC			17	COLD	600UL

MAI, MCI, MMI, MVI, SAI, SCI, SVI, 0-100%

QUERY: rpc_icodes_and_0-100%twd.qry

ROW	LINE	VOLTS	DEG	CHN	IND	%TW	LOCATION		EXT	EXT	UTIL 1	UTIL 2	CAL #	LEG	PROBE
121	107	0.44	79	P 2	TWD	22	VH1	-0.82	TEH	TEC			16	COLD	600UL
121	115	0.46	115	P 2	TWD	22	VH1	-0.92	TEH	TEC			15	COLD	600UL
121	125	0.33	90	P 2	TWD	18	10H	+0.52	TEH	TEC			11	COLD	600UL
		0.29	91	P 5	TWD	20	10H	+0.62	10H	10H			277	HOT	580PP
121	137	0.22	89	P 5	TWD	12	DBH	-1.69	10H	DBH			350	HOT	560P2
		0.19	160	P 3	TWD	9	DBH	-1.57	TEC	TEH			29	HOT	600UL
122	94	0.26	119	P 3	TWD	10	DBH	+1.72	TEH	TEC			52	COLD	600UL
		0.37	86	P 5	TWD	22	DBH	+1.72	DBH	DBH			356	HOT	560P2
122	96	0.46	93	P 5	TWD	26	DBH	+1.91	DBH	DBH			356	HOT	560P2
		0.37	126	P 3	TWD	21	DBH	+1.91	TEH	TEC			53	COLD	600UL
122	108	0.32	114	P 2	TWD	17	09H	-1.11	TEH	TEC			17	COLD	600UL
122	112	0.19	33	P 2	TWD	11	10H	-1.16	TEH	TEC			15	COLD	600UL
		0.25	98	P 5	TWD	15	10H	-0.99	10H	10H			286	HOT	580PP
122	114	0.31	80	P 2	TWD	17	10H	+0.87	TEH	TEC			14	COLD	600UL
		0.24	100	P 5	TWD	14	10H	+0.89	10H	10H			286	HOT	580PP
122	124	0.40	133	P 3	TWD	18	DBH	+1.70	TEH	TEC			12	COLD	600UL
		0.40	93	P 5	TWD	20	DBH	+1.76	10H	DBH			352	HOT	560P2
123	57	0.26	40	P 2	TWD	14	04H	+0.92	TEH	TEC			35	COLD	600UL
123	59	0.35	124	P 2	TWD	19	VH1	-0.88	TEH	TEC			37	COLD	600UL
123	63	0.38	150	P 2	TWD	19	VH1	-0.96	TEH	TEC			38	COLD	600UL
123	65	0.31	95	P 5	TWD	22	DBH	-0.65	DBH	DBH			336	HOT	560P2
		0.30	135	P 3	TWD	16	DBH	-0.75	TEH	TEC			38	COLD	600UL
		0.49	136	P 2	TWD	22	VH1	-0.92	TEH	TEC			38	COLD	600UL
123	67	0.48	142	P 2	TWD	22	VH1	-0.92	TEH	TEC			38	COLD	600UL
123	69	0.50	147	P 2	TWD	22	VH1	-0.80	TEH	TEC			40	COLD	600UL
123	71	0.45	131	P 2	TWD	21	VH1	-0.84	TEH	TEC			40	COLD	600UL
123	73	0.32	44	P 2	TWD	16	01H	+1.13	TEH	TEC			39	COLD	600UL
123	77	0.23	35	P 2	TWD	13	VH2	-0.70	TEH	TEC			48	COLD	600UL
123	95	0.56	156	P 2	TWD	22	VH1	-0.91	TEH	TEC			52	COLD	600UL
123	97	0.51	131	P 2	TWD	21	VH1	-1.00	TEH	TEC			52	COLD	600UL
123	99	0.59	116	P 2	TWD	23	VH1	-0.81	TEH	TEC			52	COLD	600UL
123	109	0.45	135	P 2	TWD	21	VH1	-0.90	TEH	TEC			17	COLD	600UL
123	111	0.49	34	P 3	TWD	25	DBH	+1.70	TEH	TEC			15	COLD	600UL
		0.46	130	P 2	TWD	22	VH1	-0.98	TEH	TEC			15	COLD	600UL
		0.62	94	P 5	TWD	28	DBH	+1.88	DBH	DBH			352	HOT	560P2
123	113	0.37	142	P 2	TWD	19	VH1	-1.01	TEH	TEC			15	COLD	600UL
123	117	0.54	139	P 2	TWD	24	VH1	-0.95	TEH	TEC			15	COLD	600UL
123	121	0.46	90	P 2	TWD	23	VH1	-0.96	TEH	TEC			13	COLD	600UL
123	129	0.51	149	P 2	TWD	23	VH1	-0.77	TEH	TEC			10	COLD	600UL
124	64	0.38	89	P 5	TWD	24	10H	-0.97	10H	10H			311	HOT	580PP
		0.25	65	P 2	TWD	14	10H	-0.86	TEH	TEC			37	COLD	600UL
124	88	0.27	101	P 5	TWD	21	DBH	+2.01	DBH	DBH			354	HOT	560P2
		0.27	20	P 3	TWD	16	DBH	+2.01	TEH	TEC			51	COLD	600UL
125	69	0.37	90	P 2	TWD	18	VH1	-0.92	TEH	TEC			39	COLD	600UL

MAI, MCI, MMI, MVI, SAI, SCI, SVI, 0-100%

QUERY: rpc_icodes_and_0-100%twd.qry

ROW	LINE	VOLTS	DEG	CHN	IND	%TW	LOCATION		EXT	EXT	UTIL 1	UTIL 2	CAL #	LEG	PROBE
125	73	0.41	130	P 2	TWD 20	VH1		-0.04	TEH	TEC			40	COLD	600UL
125	75	0.42	117	P 2	TWD 20	VH1		+0.00	TEH	TEC			40	COLD	600UL
125	83	0.55	122	P 3	TWD 27	DBH		+1.73	TEH	TEC			49	COLD	600UL
		0.40	106	P 2	TWD 21	VH1		-0.94	TEH	TEC			49	COLD	600UL
		0.70	92	P 5	TWD 28	DBH		+1.73	VH1	10H			367	HOT	560P2
125	85	0.44	128	P 2	TWD 22	VH1		-0.88	TEH	TEC			51	COLD	600UL
		0.27	113	P 2	TWD 15	VH2		-0.80	TEH	TEC			51	COLD	600UL
125	91	0.26	105	P 5	TWD 17	DBH		+1.96	DBH	DBH			356	HOT	560P2
		0.22	110	P 3	TWD 13	DBH		+1.96	TEH	TEC			51	COLD	600UL
125	97	0.50	123	P 2	TWD 23	VH1		-0.96	TEH	TEC			53	COLD	600UL
125	103	0.39	146	P 2	TWD 19	VH1		-0.85	TEH	TEC			17	COLD	600UL
126	52	0.79	15	P 1	SCI	TSH		-11.69	TSH	TSH	1.34	18.33	300	HOT	580PP
126	62	0.54	96	P 5	TWD 30	10H		-1.07	10H	10H			308	HOT	580PP
126	86	0.50	95	P 5	TWD 31	DBH		+1.92	DBH	DBH			354	HOT	560P2
		0.27	108	P 3	TWD 16	DBH		+1.92	TEH	TEC			51	COLD	600UL
126	90	0.33	110	P 3	TWD 14	DBH		+2.16	TEH	TEC			50	COLD	600UL
		0.44	96	P 5	TWD 26	DBH		+2.06	DBH	DBH			356	HOT	560P2
126	112	0.42	29	P 3	TWD 23	DBH		+1.86	TEH	TEC			15	COLD	600UL
		0.42	102	P 5	TWD 21	DBH		+1.84	DBH	10H			367	HOT	560P2
127	53	0.52	71	P 2	TWD 23	VH1		-0.98	TEH	TEC			35	COLD	600UL
127	63	0.33	137	P 2	TWD 17	VH1		-0.92	TEH	TEC			38	COLD	600UL
127	69	0.37	160	P 2	TWD 18	VH1		-0.84	TEH	TEC			40	COLD	600UL
127	73	0.35	81	P 2	TWD 18	02H		+0.90	TEH	TEC			39	COLD	600UL
127	75	0.56	144	P 2	TWD 24	VH1		-0.83	TEH	TEC			39	COLD	600UL
		0.22	140	P 2	TWD 12	VH1		+0.77	TEH	TEC			39	COLD	600UL
127	95	0.52	141	P 2	TWD 20	VH1		-0.95	TEH	TEC			52	COLD	600UL
127	97	0.41	152	P 2	TWD 18	VH1		-1.02	TEH	TEC			52	COLD	600UL
127	99	0.46	66	P 2	TWD 20	VH1		-1.01	TEH	TEC			52	COLD	600UL
127	101	0.20	50	P 2	TWD 10	VH3		+0.83	TEH	TEC			52	COLD	600UL
127	105	0.46	121	P 2	TWD 21	VH1		-0.81	TEH	TEC			17	COLD	600UL
127	107	0.48	142	P 2	TWD 22	VH1		-0.88	TEH	TEC			17	COLD	600UL
127	109	0.40	140	P 2	TWD 19	VH1		-0.81	TEH	TEC			17	COLD	600UL
127	111	0.42	145	P 2	TWD 21	VH1		-0.97	TEH	TEC			15	COLD	600UL
127	117	0.28	120	P 2	TWD 15	VH1		+0.90	TEH	TEC			15	COLD	600UL
		0.44	135	P 2	TWD 21	VH1		-0.90	TEH	TEC			15	COLD	600UL
127	121	0.44	123	P 2	TWD 22	VH1		-1.05	TEH	TEC			13	COLD	600UL
127	123	0.38	142	P 2	TWD 22	VH1		-0.92	TEC	TEH			132	HOT	600UL
127	125	0.53	117	P 2	TWD 23	VH1		-0.87	TEH	TEC			10	COLD	600UL
128	60	0.32	90	P 5	TWD 20	10H		+0.05	10H	10H			307	HOT	580PP
		0.30	87	P 5	TWD 19	10H		-1.08	10H	10H			307	HOT	580PP
		0.41	133	P 2	TWD 20	10H		-1.01	TEH	TEC			38	COLD	600UL
		0.24	32	P 2	TWD 13	10H		+0.00	TEH	TEC			38	COLD	600UL
128	68	0.23	91	P 5	TWD 17	DBH		+1.84	DBH	DBH			336	HOT	560P2
		0.23	17	P 3	TWD 12	DBH		+1.86	TEH	TEC			39	COLD	600UL
128	72	0.27	139	2	SAI	06H		+0.00	06H	06H	0.00		317	HOT	580PP

MAI, MCI, MMI, MVI, SAI, SCI, SVI, 0-100%

QUERY: rpc_icodes_and_0-100%twd.qry

ROW	LINE	VOLTS	DEG	CHN	IND	%TW	LOCATION		EXT	EXT	UTIL 1	UTIL 2	CAL #	LEG	PROBE
129	47	0.66	131	P 2	TWD 28	VH3	-0.84		TEH	TEC			34	COLD	600UL
		0.45	93	P 5	TWD 28	VH3	-1.17		VH3	VH3			336	HOT	560P2
129	63	0.20	94	P 5	TWD 14	10H	-0.17		10H	10H			312	HOT	580PP
129	67	0.33	98	P 5	TWD 22	DBH	-2.23		DBH	DBH			336	HOT	560P2
		0.35	47	P 3	TWD 17	DBH	-2.20		TEH	TEC			37	COLD	600UL
129	71	0.45	111	P 2	TWD 21	VH1	-0.90		TEH	TEC			39	COLD	600UL
129	73	0.43	137	P 2	TWD 20	VH1	-0.83		TEH	TEC			40	COLD	600UL
129	75	0.29	104	P 2	TWD 15	VH1	+0.86		TEH	TEC			40	COLD	600UL
		0.58	86	P 2	TWD 24	VH1	-0.77		TEH	TEC			40	COLD	600UL
129	81	0.17	122	2	SAI	08H	-0.24		08H	08H	0.38		274	HOT	580PP
129	87	0.37	138	P 2	TWD 20	VH1	-0.94		TEH	TEC			51	COLD	600UL
129	93	0.18	83	2	SAI	08H	-0.44		08H	08H			288	HOT	580PP
		0.18	108	2	SAI	08H	+0.54		08H	08H			288	HOT	580PP
		0.12	108	2	SAI	08H	+0.53		08H	08H	0.00		292	HOT	580PP
		0.17	85	2	SAI	08H	-0.51		08H	08H	0.00		292	HOT	580PP
129	95	0.45	117	P 2	TWD 21	VH1	-0.92		TEH	TEC			53	COLD	600UL
		0.30	80	P 3	TWD 18	DBH	+1.76		TEH	TEC			53	COLD	600UL
		0.40	91	P 5	TWD 24	DBH	+1.76		DBH	DBH			356	HOT	560P2
		0.16	86	2	MAI	06H	+3.10	TO+28.73	06H	06H	0.15		289	HOT	580PP
129	113	0.44	146	P 2	TWD 21	VH1	-0.99		TEH	TEC			15	COLD	600UL
129	119	0.46	85	P 2	TWD 22	VH1	-0.98		TEH	TEC			12	COLD	600UL
129	121	0.36	156	P 2	TWD 19	VH1	-0.88		TEH	TEC			12	COLD	600UL
129	123	0.34	100	P 2	TWD 18	VH1	-0.89		TEH	TEC			12	COLD	600UL
130	74	0.40	90	P 5	TWD 27	10H	-1.06		10H	10H			318	HOT	580PP
130	94	0.37	94	P 5	TWD 24	10H	-0.99		10H	10H			326	HOT	580PP
130	106	0.35	118	P 2	TWD 17	VH1	-0.70		TEH	TEC			17	COLD	600UL
130	128	0.36	85	P 2	TWD 20	VH2	+0.40		TEH	TEC			11	COLD	600UL
		0.26	86	P 5	TWD 14	VH2	-0.49		VH2	VH2			352	HOT	560P2
131	67	0.47	101	P 2	TWD 21	10H	-1.02		TEH	TEC			41	COLD	600UL
		0.34	85	P 2	TWD 17	10H	+0.06		TEH	TEC			41	COLD	600UL
131	77	0.51	95	P 5	TWD 23	DBH	+1.99		DBH	DBH			357	HOT	560P2
		0.47	21	P 3	TWD 21	DBH	+1.99		TEH	TEC			44	COLD	600UL
131	83	0.49	97	P 5	TWD 22	DBH	-2.28	TO+1.89	DBH	DBH			357	HOT	560P2
		0.20	133	P 3	TWD 11	DBH	-1.85		TEH	TEC			44	COLD	600UL
131	89	0.52	99	P 2	TWD 26	10H	+0.97		TEH	TEC			44	COLD	600UL
		0.45	98	P 5	TWD 23	10H	+0.82		10H	10H	AIC		301	HOT	580PP
131	115	0.45	108	P 2	TWD 22	VH1	-1.02		TEH	TEC			46	COLD	600UL
131	125	0.48	84	P 2	TWD 23	VH1	-0.92		TEH	TEC			46	COLD	600UL
131	127	0.33	86	P 5	TWD 25	03C	+0.91		03C	03C			136	COLD	580PP
		0.47	106	P 2	TWD 24	03C	+0.95		TEH	TEC			47	COLD	600UL
132	94	0.38	95	P 5	TWD 20	10H	+0.80		10H	10H			306	HOT	580PP
		0.55	43	P 2	TWD 27	10H	+0.97		TEH	TEC			44	COLD	600UL
133	61	0.33	99	P 2	TWD 17	VH1	-0.86		TEC	TEH			129	HOT	600UL
133	65	0.37	144	P 2	TWD 18	VH1	-0.75		TEH	TEC			43	COLD	600UL
133	67	0.35	148	P 2	TWD 17	VH1	-0.85		TEH	TEC			43	COLD	600UL
133	71	0.46	145	P 2	TWD 21	VH1	-0.81		TEH	TEC			43	COLD	600UL

MAI, MCI, MMI, MVI, SAI, SCI, SVI, 0-100%

QUERY: rpc_icodes_and_0-100%twd.qry

ROW	LINE	VOLTS	DEG	CHN	IND	%TW	LOCATION		EXT	EXT	UTIL 1	UTIL 2	CAL #	LEG	PROBE
133	75	0.47	97	P 5	TWD	24	DBH +2.00		DBH	DBH			357	HOT	560P2
		0.33	96	P 3	TWD	15	DBH +1.85		TEH	TEC			41	COLD	600UL
133	79	0.43	129	P 2	TWD	23	VH1 -0.93		TEH	TEC			44	COLD	600UL
133	81	0.30	128	P 2	TWD	18	VH1 -0.92		TEH	TEC			44	COLD	600UL
133	83	0.41	90	P 5	TWD	23	10H -1.01		10H	10H			332	HOT	580PP
133	87	0.38	88	P 2	TWD	19	VH1 -1.12		TEH	TEC			45	COLD	600UL
133	97	0.16	123	2	SAI		05H +4.49	TO+7.27	05H	05H	0.00		310	HOT	580PP
		0.12	110	2	SAI		07H -11.10		07H	07H	0.00		310	HOT	580PP
		0.12	104	2	SAI		07H -17.27		07H	07H	0.28		310	HOT	580PP
133	105	0.42	120	P 2	TWD	21	VH1 -0.91		TEH	TEC			46	COLD	600UL
133	115	0.21	99	P 5	TWD	12	10H +0.77		10H	10H			316	HOT	580PP
		0.40	97	P 2	TWD	20	10H +0.92		TEH	TEC			46	COLD	600UL
134	68	0.21	98	P 5	TWD	12	10H -0.71		10H	10H			320	HOT	580PP
		0.27	127	P 2	TWD	14	10H -0.71		TEH	TEC			41	COLD	600UL
134	84	0.25	125	P 2	TWD	13	10H -1.11		TEH	TEC			45	COLD	600UL
		0.32	100	P 5	TWD	18	10H -1.08		10H	10H			301	HOT	580PP
134	86	0.44	99	P 5	TWD	23	10H -1.02		10H	10H	AIC		301	HOT	580PP
134	100	0.30	94	P 5	TWD	16	10H +0.86		10H	10H			310	HOT	580PP
		0.30	82	P 2	TWD	16	10H +0.99		TEH	TEC			45	COLD	600UL
135	77	0.32	145	P 2	TWD	19	VH1 -0.79		TEH	TEC			44	COLD	600UL
135	81	0.29	99	P 5	TWD	14	VH1 -0.83		VH1	VH1			357	HOT	560P2
		0.28	56	P 2	TWD	15	07H +0.80		TEH	TEC			45	COLD	600UL
		0.12	90	2	SAI		07H +0.55		07H	07H	0.00		298	HOT	580PP
		0.10	95	2	SAI		07H +0.75		07H	07H	0.00		298	HOT	580PP
135	83	0.17	101	2	MAI		08H +0.21		08H	08H	0.0		301	HOT	580PP
		0.11	88	2	SAI		08H +0.81		08H	08H	0.45		301	HOT	580PP
135	85	0.43	106	P 2	TWD	23	VH1 +0.00		TEH	TEC			44	COLD	600UL
135	87	0.33	100	P 5	TWD	18	10H -1.06		10H	10H	AIC		301	HOT	580PP
135	91	0.37	107	P 2	TWD	18	VH1 -1.08		TEH	TEC			45	COLD	600UL
135	93	0.21	90	P 5	TWD	13	10H +0.80		10H	10H			332	HOT	580PP
		0.36	62	P 2	TWD	18	10H +0.91		TEH	TEC			45	COLD	600UL
135	97	0.21	35	P 2	TWD	13	10H +0.97		TEH	TEC			44	COLD	600UL
		0.14	100	P 5	TWD	8	10H -1.03		10H	10H			310	HOT	580PP
		0.19	103	P 5	TWD	11	10H +0.84		10H	10H			310	HOT	580PP
135	119	0.40	134	P 2	TWD	20	VH1 -1.03		TEH	TEC			46	COLD	600UL
136	74	0.35	122	P 2	TWD	18	10H -1.01		TEH	TEC			43	COLD	600UL
		0.44	93	P 5	TWD	22	10H -1.04		10H	10H			298	HOT	580PP
136	86	0.41	135	P 2	TWD	22	10H -1.10		TEH	TEC			44	COLD	600UL
		0.42	83	P 5	TWD	22	10H -1.06		10H	10H	AIC		301	HOT	580PP
136	110	0.17	93	P 2	TWD	12	VH1 +1.12		TEC	TEH			132	HOT	600UL
137	67	0.33	139	P 2	TWD	17	VH1 -0.80		TEH	TEC			43	COLD	600UL
137	79	0.43	96	P 2	TWD	23	VH1 -0.88		TEH	TEC			44	COLD	600UL
137	83	0.37	146	P 2	TWD	18	VH1 -0.86		TEH	TEC			45	COLD	600UL
137	91	0.39	94	P 5	TWD	16	10H -0.95		10H	10H			324	HOT	580PP
137	119	0.23	90	P 5	TWD	19	01C -0.94		01C	01C			136	COLD	580PP
		0.33	75	P 2	TWD	19	01C -0.98		TEH	TEC			47	COLD	600UL

MAI, MCI, MMI, MVI, SAI, SCI, SVI, 0-100%

QUERY: rpc_icodes_and_0-100%twd.qry

ROW	LINE	VOLTS	DEG	CHN	IND	%TW	LOCATION		EXT	EXT	UTIL 1	UTIL 2	CAL #	LEG	PROBE
138	74	0.27	91	P 2	TWD	14	VH1	-0.77	TEH	TEC			41	COLD	600UL
138	78	0.34	46	P 2	TWD	20	VH1	-0.81	TEH	TEC			44	COLD	600UL
139	71	0.38	137	P 2	TWD	18	VH1	-0.94	TEH	TEC			41	COLD	600UL
139	77	0.45	128	P 2	TWD	24	VH1	-0.81	TEH	TEC			44	COLD	600UL
139	83	0.41	67	P 2	TWD	22	VH1	-1.01	TEH	TEC			44	COLD	600UL
139	85	0.34	74	P 2	TWD	20	VH1	-1.04	TEH	TEC			44	COLD	600UL
139	105	0.47	71	P 2	TWD	24	10H	+0.98	TEH	TEC			47	COLD	600UL
		0.36	121	P 2	TWD	20	VH1	-0.98	TEH	TEC			47	COLD	600UL
		0.35	94	P 5	TWD	19	10H	+0.84	10H	10H			313	HOT	580PP
140	66	0.22	123	P 3	TWD	14	DBH	+2.09	TEH	TEC			43	COLD	600UL
		0.57	15	P 3	TWD	27	DBC	+1.67	TEH	TEC	LAR		43	COLD	600UL
		0.70	78	P 5	TWD	37	DBC	+1.77	DBC	DBC			162	COLD	560P2
		0.23	93	P 5	TWD	13	DBH	+1.95	DBH	DBH			359	HOT	560P2
140	76	0.16	103	P 5	TWD	7	DBH	-1.75	DBH	DBH			357	HOT	560P2
		0.18	93	P 3	TWD	12	DBH	-1.75	TEH	TEC			45	COLD	600UL
140	88	0.29	97	P 5	TWD	14	DBH	+1.94	DBH	DBH			357	HOT	560P2
		0.21	121	P 3	TWD	12	DBH	+1.94	TEH	TEC			44	COLD	600UL
141	63	0.40	81	P 5	TWD	24	DBC	+1.58	DBC	DBC			162	COLD	560P2
		0.41	32	P 3	TWD	17	DBC	+1.37	TEH	TEC			41	COLD	600UL
141	65	0.22	80	P 5	TWD	18	08C	+0.85	08C	08C	ASR		136	COLD	580PP
		0.31	113	P 2	TWD	15	08C	+0.74	TEH	TEC			41	COLD	600UL
141	67	0.62	107	P 2	TWD	26	VC1	+0.86	TEH	TEC			43	COLD	600UL
		0.33	143	P 2	TWD	17	VH1	-0.84	TEH	TEC			43	COLD	600UL
		0.43	96	P 5	TWD	28	VC1	+0.86	VC1	VC1			162	COLD	560P2
141	77	0.40	82	P 5	TWD	26	DBC	+1.88	DBC	DBC			162	COLD	560P2
		0.20	139	P 2	TWD	11	VC1	+0.88	TEH	TEC			45	COLD	600UL
		0.29	108	P 3	TWD	17	DBC	+1.45	TEH	TEC			45	COLD	600UL
141	79	0.86	86	P 5	TWD	41	DBC	+2.00	DBC	DBC			162	COLD	560P2
		0.26	94	P 5	TWD	20	VC1	+0.94	VC1	VC1			162	COLD	560P2
		0.46	118	P 2	TWD	24	VH1	-0.92	TEH	TEC			44	COLD	600UL
		0.31	124	P 2	TWD	18	VC1	+0.94	TEH	TEC			44	COLD	600UL
		0.79	121	P 3	TWD	30	DBC	+2.20	TEH	TEC			44	COLD	600UL
141	81	0.35	157	P 2	TWD	20	VH1	-0.86	TEH	TEC			44	COLD	600UL
		0.12	102	2	SAI		07H	-22.55 TO-7.71	07H	07H	0.00		298	HOT	580PP
142	66	0.36	76	P 5	TWD	25	DBC	+1.77	DBC	DBC			162	COLD	560P2
		0.25	103	P 3	TWD	12	DBC	+1.27	TEH	TEC			41	COLD	600UL
142	68	0.16	95	P 5	TWD	11	10H	-0.31	10H	10H			320	HOT	580PP
		0.23	132	P 2	TWD	12	10H	-0.21	TEH	TEC			41	COLD	600UL
142	72	0.81	81	P 5	TWD	40	DBC	+1.93	DBC	DBC			162	COLD	560P2
		0.26	74	P 5	TWD	21	10C	-1.17	10C	10C			136	COLD	580PP
		0.36	115	P 2	TWD	17	10C	-1.01	TEH	TEC			41	COLD	600UL
		0.99	114	P 3	TWD	31	DBC	+2.08	TEH	TEC			41	COLD	600UL
142	82	0.66	84	P 5	TWD	36	DBC	+1.75	DBC	DBC			162	COLD	560P2
		0.62	104	P 3	TWD	29	DBC	+1.67	TEH	TEC			45	COLD	600UL
142	84	0.40	85	P 5	TWD	26	DBC	+1.68	DBC	DBC			162	COLD	560P2
		0.30	119	P 3	TWD	18	DBC	+1.40	TEH	TEC			45	COLD	600UL
142	86	0.32	94	P 5	TWD	18	DBH	+1.86	DBH	DBH			357	HOT	560P2
		0.23	92	P 3	TWD	12	DBH	+1.88	TEH	TEC			44	COLD	600UL
142	90	0.37	92	P 5	TWD	18	DBH	+1.72	DBH	DBH			357	HOT	560P2
		0.17	153	P 3	TWD	12	DBH	+1.94	TEH	TEC			45	COLD	600UL
142	104	0.21	16	P 3	TWD	12	DBH	+1.52	TEH	TEC			47	COLD	600UL
		0.23	87	P 5	TWD	13	DBH	+1.93	DBH	DBH			359	HOT	560P2

MAI, MCI, MMI, MVI, SAI, SCI, SVI, 0-100%

QUERY: rpc_icodes_and_0-100%twd.qry

ROW	LINE	VOLTS	DEG	CHN	IND	%TW	LOCATION		EXT	EXT	UTIL 1	UTIL 2	CAL #	LEG	PROBE
142	110	0.45	50	P 3	TWD	23	DBH	+1.80	TEH	TEC			47	COLD	600UL
		0.48	93	P 5	TWD	24	DBH	+1.29	DBH	DBH			359	HOT	560P2
143	73	0.18	103	P 5	TWD	10	01H	-0.92	01H	01H			320	HOT	580PP
		1.39	80	P 5	TWD	50	DBC	+1.75	DBC	DBC			174	COLD	560P2
		0.12	32	P 2	TWD	7	01H	-0.95	TEH	TEC			41	COLD	600UL
		2.07	25	P 3	TWD	42	DBC	+2.14	TEH	TEC			41	COLD	600UL
143	77	0.31	114	P 2	TWD	18	VH1	-0.77	TEH	TEC			44	COLD	600UL
143	83	0.42	77	P 2	TWD	22	VH1	-0.94	TEH	TEC			44	COLD	600UL
143	89	0.26	103	P 5	TWD	15	DBH	-1.42	DBH	DBH			357	HOT	560P2
		0.21	36	P 3	TWD	14	DBH	-1.75	TEH	TEC			45	COLD	600UL
143	109	0.25	138	P 2	TWD	15	VC2	+0.94	TEH	TEC			47	COLD	600UL
		0.17	142	P 3	TWD	11	DBH	-1.61	TEH	TEC			47	COLD	600UL
		0.29	87	P 5	TWD	15	DBH	-1.96	DBH	DBH			359	HOT	560P2
144	74	0.42	85	P 5	TWD	27	VC1	+0.85	VC1	VC1			162	COLD	560P2
		0.60	74	P 5	TWD	34	DBC	+1.64	DBC	DBC			162	COLD	560P2
		0.50	84	P 5	TWD	30	DBC	-0.25	DBC	DBC			162	COLD	560P2
		0.50	86	P 2	TWD	22	VC1	+0.93	TEH	TEC			41	COLD	600UL
		0.26	56	P 3	TWD	12	DBC	-0.23	TEH	TEC			41	COLD	600UL
		0.77	82	P 3	TWD	27	DBC	+1.58	TEH	TEC			41	COLD	600UL
144	78	0.39	70	P 5	TWD	26	DBC	-2.00	DBC	DBC			162	COLD	560P2
		0.34	91	P 3	TWD	17	DBC	-2.24	TEH	TEC			44	COLD	600UL
144	80	0.53	94	P 5	TWD	23	DBH	+2.00	DBH	DBH			357	HOT	560P2
		0.40	121	P 3	TWD	22	DBH	+1.90	TEH	TEC			45	COLD	600UL
144	82	1.08	80	P 5	TWD	45	DBC	+1.67	DBC	DBC			162	COLD	560P2
		0.84	95	P 3	TWD	31	DBC	+1.29	TEH	TEC			44	COLD	600UL
144	84	0.79	89	P 5	TWD	39	DBC	+1.40	DBC	DBC			162	COLD	560P2
		0.51	101	P 3	TWD	23	DBC	+1.40	TEH	TEC			44	COLD	600UL
144	86	0.33	98	P 5	TWD	18	DBH	+1.83	DBH	DBH			357	HOT	560P2
		0.25	121	P 3	TWD	15	DBH	+1.65	TEH	TEC			45	COLD	600UL
144	88	0.82	85	P 5	TWD	40	DBC	+1.80	DBC	DBC			162	COLD	560P2
		0.74	51	P 3	TWD	29	DBC	+1.47	TEH	TEC			44	COLD	600UL
144	90	0.73	96	P 5	TWD	36	DBC	+1.93	DBC	DBC			163	COLD	560P2
		0.43	28	P 3	TWD	20	DBC	+1.27	TEH	TEC			44	COLD	600UL
144	96	0.46	8	P 3	TWD	21	DBC	+1.74	TEH	TEC			44	COLD	600UL
		0.59	71	P 5	TWD	33	DBC	+1.66	DBC	DBC			162	COLD	560P2
		0.43	95	P 5	TWD	22	DBH	+1.98	DBH	DBH			359	HOT	560P2
		0.24	132	P 3	TWD	13	DBH	+2.01	TEH	TEC			44	COLD	600UL
144	106	0.75	75	P 3	TWD	31	DBC	+1.88	TEH	TEC			47	COLD	600UL
		0.78	92	P 5	TWD	37	DBC	+2.00	DBC	DBC			164	COLD	560P2
145	75	0.60	95	P 5	TWD	26	DBH	+1.89	DBH	DBH			357	HOT	560P2
		0.28	104	P 5	TWD	13	VH1	-0.88	VH1	VH1			357	HOT	560P2
		0.76	73	P 5	TWD	38	DBC	+1.59	DBC	DBC			162	COLD	560P2
		0.51	77	P 3	TWD	21	DBH	+1.89	TEH	TEC			41	COLD	600UL
		0.43	122	P 2	TWD	20	VH1	-0.88	TEH	TEC			41	COLD	600UL
		0.56	43	P 3	TWD	22	DBC	+1.33	TEH	TEC			41	COLD	600UL
145	79	0.43	95	P 5	TWD	28	DBC	+2.00	DBC	DBC			162	COLD	560P2
		0.25	83	P 3	TWD	13	DBC	+2.00	TEH	TEC			44	COLD	600UL
145	81	0.38	95	P 5	TWD	18	VH1	-0.82	VH1	VH1			357	HOT	560P2
		1.10	79	P 5	TWD	46	DBC	-1.62	DBC	DBC			162	COLD	560P2
		0.50	118	P 2	TWD	26	VH1	-0.82	TEH	TEC			44	COLD	600UL
		0.64	76	P 3	TWD	29	DBC	-1.70	TEH	TEC			44	COLD	600UL
145	83	0.44	100	P 5	TWD	20	DBH	-1.72	DBH	DBH			357	HOT	560P2
		0.68	76	P 5	TWD	36	DBC	+1.57	DBC	DBC			162	COLD	560P2
		0.34	87	P 5	TWD	23	VC1	+0.84	VC1	VC1			162	COLD	560P2
		0.44	57	P 2	TWD	21	VC1	+0.92	TEH	TEC			45	COLD	600UL
		0.24	108	P 3	TWD	15	DBH	-1.72	TEH	TEC			45	COLD	600UL
		0.62	34	P 3	TWD	29	DBC	+1.67	TEH	TEC			45	COLD	600UL

MAI, MCI, MMI, MVI, SAI, SCI, SVI, 0-100%

QUERY: rpc_icodes_and_0-100%twd.qry

ROW	LINE	VOLTS	DEG	CHN	IND	%TW	LOCATION			EXT	EXT	UTIL 1	UTIL 2	CAL #	LEG	PROBE
145	87	0.47	88	P 5	TWD	30	DBC	+2.13		DBC	DBC			162	COLD	560P2
		0.32	71	P 5	TWD	22	DBC	-1.63		DBC	DBC			162	COLD	560P2
		0.27	108	P 3	TWD	14	DBC	+1.75		TEH	TEC			44	COLD	600UL
		0.23	49	P 3	TWD	13	DBC	-1.75		TEH	TEC			44	COLD	600UL
145	89	0.30	107	P 5	TWD	17	DBH	-1.89		DBH	DBH			357	HOT	560P2
		0.31	89	P 5	TWD	22	VC1	+0.91		VC1	VC1			162	COLD	560P2
		0.17	50	P 3	TWD	9	DBH	-1.72		TEH	TEC			44	COLD	600UL
		0.30	35	P 2	TWD	18	VC1	+0.91		TEH	TEC			44	COLD	600UL
145	95	0.29	151	P 2	TWD	15	VH1	-0.95		TEH	TEC			45	COLD	600UL
146	80	0.49	102	P 5	TWD	31	DBC	+2.00		DBC	DBC			162	COLD	560P2
		0.47	86	P 3	TWD	21	DBC	+2.00		TEH	TEC			44	COLD	600UL
146	84	0.53	88	P 5	TWD	31	DBC	+1.70		DBC	DBC			162	COLD	560P2
		0.50	11	P 3	TWD	25	DBC	+1.73		TEH	TEC			45	COLD	600UL
146	100	0.73	92	P 5	TWD	32	DBH	-2.05		DBH	DBH			359	HOT	560P2
		0.60	118	P 3	TWD	28	DBH	-1.93		TEH	TEC			45	COLD	600UL
147	91	0.35	100	P 5	TWD	23	VC1	-0.83		VC1	VC1			163	COLD	560P2
		0.37	142	P 2	TWD	18	VC1	-0.83		TEH	TEC			45	COLD	600UL
147	93	0.22	87	P 5	TWD	16	VC1	-0.49		VC1	VC1			163	COLD	560P2
		0.64	93	P 5	TWD	33	VC1	+0.91		VC1	VC1			163	COLD	560P2
		0.44	92	P 5	TWD	20	DBH	-2.27	TO+1.70	DBH	DBH			357	HOT	560P2
		0.53	81	P 5	TWD	34	DBC	-1.80	TO+0.75	DBC	DBC			175	COLD	560P2
		0.21	37	P 3	TWD	13	DBC	-1.89		TEH	TEC			45	COLD	600UL
		0.28	75	P 2	TWD	15	VC1	-0.45		TEH	TEC			45	COLD	600UL
		0.18	137	P 3	TWD	11	DBH	-2.05		TEH	TEC			45	COLD	600UL
		0.87	101	P 2	TWD	32	VC1	+0.92		TEH	TEC			45	COLD	600UL

Total Tubes : 779
Total Records: 1307

Appendix 4

Inspection Summary

Steam Generator E-089

MAI, MCI, MMI, MVI, SAI, SCI, SVI, 0-100%

QUERY: rpc_icodes_and_0-100%twd

ROW	LINE	VOLTS	DEG	CHN	IND	%TW	LOCATION		EXT	EXT	UTIL 1	UTIL 2	CAL #	LEG	PROBE
1	55	0.22	103	2	SAI		02H	-0.45	02H	02H	0.0		192	HOT	580PP
2	118	0.27	20	P 1	SCI		TSH	-3.06	TSH	TSH	0.11		238	HOT	580PP
		0.50	16	P 1	SCI		TSH	-6.46	TSH	TSH	0.33	17.77	238	HOT	580PP
4	10	0.42	10	2	SAI		TSH	-3.84	TSH	TSH	0.0	17.87	196	HOT	580PP
4	126	1.62	36	P 1	MCI		TSH	-9.35	TSH	TSH	4.00	19.83	234	HOT	580PP
5	115	0.85	28	P 1	SCI		TSH	-7.82	TSH	TSH	0.63	18.69	238	HOT	580PP
6	60	0.33	28	P 2	TWD	15	02H	-1.25	TEH	TEC			67	COLD	600UL
6	126	0.56	40	P 2	TWD	21	03H	+0.89	TEH	TEC			9	COLD	600UL
		0.22	102	P 2	TWD	10	05H	+0.93	TEH	TEC			9	COLD	600UL
7	33	0.21	161	P 2	TWD	10	07H	-0.65	TEH	TEC	LAR		70	COLD	600UL
8	34	0.35	25	P 2	TWD	22	07H	-0.60	TEC	TEH	LAR		54	HOT	600UL
8	114	0.31	16	P 1	SCI		TSH	-5.80	TSH	TSH	0.28	18.43	238	HOT	580PP
		0.38	14	2	SAI		TSH	-1.02	TSH	TSH	0.00		238	HOT	580PP
		0.31	17	P 1	SCI		TSH	+0.00	TSH	TSH	0.00		238	HOT	580PP
8	128	0.34	88	P 2	TWD	14	01H	+0.95	TEH	TEC			9	COLD	600UL
9	35	3.22	34	P 1	SCI		TSH	-9.50	TSH	TSH	3.41	17.75	195	HOT	580PP
9	39	0.36	39	P 2	TWD	15	03H	+0.88	TEC	TEH			48	HOT	600UL
9	49	0.41	102	2	SAI		05H	+0.15	05H	05H	.47		191	HOT	580PP
9	63	2.56	33	2	SAI		TSH	-19.01	TSH	TSH	3.55	19.01	291	HOT	580PP
9	119	0.36	78	P 2	TWD	15	01H	+0.89	TEH	TEC			9	COLD	600UL
9	127	3.54	37	P 1	MCI		TSH	-9.73	TSH	TSH	5.60	18.01	233	HOT	580PP
9	131	0.68	33	P 1	SCI		TSH	-14.44	TSH	TSH	1.25	21.60	152	HOT	580PP
		3.31	34	P 1	SCI		TSH	-11.17	TSH	TSH	4.82		152	HOT	580PP
		1.14	29	P 1	MCI		TSH	-10.73	TSH	TSH	1.11		152	HOT	580PP
		1.18	22	P 1	SCI		TSH	-10.31	TSH	TSH	0.76		152	HOT	580PP
		2.36	37	P 1	MCI		TSH	-8.53	TSH	TSH	4.45		152	HOT	580PP
9	147	1.41	26	P 1	MCI		TSH	-8.28	TSH	TSH	2.27	22.69	155	HOT	580PP
10	140	0.15	20	P 1	SCI		TSH	-0.35	TSH	TSH	0.86	21.42	155	HOT	580PP
11	119	0.36	87	P 2	TWD	16	07H	+0.87	TEH	TEC			3	COLD	600UL
11	127	0.24	142	P 3	TWD	10	DBH	+1.33	TEH	TEC			59	COLD	600UL
		0.16	100	2	SAI		DBH	+1.35	DBH	07H	.16		145	COLD	560P2
11	159	0.17	108	2	SAI		06H	-0.37	06H	06H	0.42		194	HOT	580PP
11	163	0.10	69	2	SAI		06H	+1.48	06H	06H	0.00		254	HOT	580PP
11	165	0.23	85	2	SAI		06H	+0.74	06H	06H	0.00		255	HOT	580PP
		0.41	63	P 2	TWD	18	06H	+0.53	TEC	TEH			37	HOT	600UL
12	10	0.52	150	2	SAI		04H	-0.72	04H	04H	0.00		210	HOT	580PP
12	120	0.80	30	P 1	SCI		TSH	-8.27	TSH	TSH	1.08	19.56	217	HOT	580PP
12	138	1.94	33	P 1	SCI		TSH	-7.34	TSH	TSH	1.43	19.33	167	HOT	580PP
13	15	0.27	127	2	SAI		05H	-0.78	05H	05H	0.00		209	HOT	580PP
		0.25	126	2	SAI		05H	+0.55	05H	05H	0.00		209	HOT	580PP
		0.35	131	P 2	TWD	19	05H	-0.78	TEC	TEH			17	HOT	600UL
13	37	0.29	107	P 3	TWD	15	DBC	-0.15	TEC	TEH			30	HOT	600UL
13	39	0.42	65	P 2	TWD	19	03H	+0.84	TEC	TEH			30	HOT	600UL
13	141	0.19	112	2	SAI		02H	-2.27	02H	02H	.31		171	HOT	580PP

MAI, MCI, MMI, MVI, SAI, SCI, SVI, 0-100%

QUERY: rpc_icodes_and_0-100%twd.qry

ROW	LINE	VOLTS	DEG	CHN	IND	%TW	LOCATION		EXT	EXT	UTIL 1	UTIL 2	CAL #	LEG	PROBE
14	124	1.72	27	2	SAI	TSH	-9.52		TSH	TSH	1.75	18.14	208	HOT	580PP
14	166	0.11	120	2	SAI	05H	+8.87		05H	05H	0.00		254	HOT	580PP
15	21	0.43	88	P 2	TWD 18	03H	+0.53		TEC	TEH			22	HOT	600UL
15	37	0.29	19	P 1	SCI	TSH	-9.74		TSH	TSH	0.44	18.50	228	HOT	580PP
16	58	0.88	29	P 1	SCI	TSH	-8.56		TSH	TSH	2.01	20.93	165	HOT	580PP
18	14	0.38	135	2	SAI	05H	+0.22		05H	05H	0.23		210	HOT	580PP
18	30	0.46	49	P 3	TWD 21	DBH	+1.89		TEC	TEH			26	HOT	600UL
18	114	0.12	103	P 1	MCI	TSH	+0.12		TSH	TSH	0.10	17.56	225	HOT	580PP
18	118	0.33	28	P 1	SCI	TSH	-10.19		TSH	TSH	0.28	17.85	221	HOT	580PP
18	128	3.75	34	P 1	SCI	TSH	-11.61		TSH	TSH	4.30	18.07	197	HOT	580PP
		0.55	14	P 1	SCI	TSH	-11.20		TSH	TSH	0.67		197	HOT	580PP
18	144	0.26	98	P 3	TWD 13	DBH	+1.26		TEC	TEH			24	HOT	600UL
18	162	0.37	61	P 2	TWD 17	05H	-0.24		TEC	TEH			37	HOT	600UL
19	9	0.28	91	2	SAI	05H	+0.89		05H	05H	0.80		204	HOT	580PP
19	109	0.19	100	P 3	TWD 8	DBC	+2.25		TEH	TEC			5	COLD	600UL
		0.15	103	P 5	TWD 13	DBC	+1.95		07C	DBC			145	COLD	560P2
19	167	0.07	59	2	SAI	06H	+18.11		06H	06H	0.00		255	HOT	580PP
		0.12	93	2	SAI	06H	+20.09		06H	06H	0.10		255	HOT	580PP
		0.12	72	2	SAI	06H	+20.51		06H	06H	0.00		255	HOT	580PP
		0.10	72	2	SAI	06H	+21.25		06H	06H	0.00		255	HOT	580PP
		0.11	119	2	SAI	06H	+24.12		06H	06H	0.00		255	HOT	580PP
19	173	0.19	96	P 2	TWD 10	VSM	+0.81		TEC	TEH			41	HOT	600UL
		0.15	75	P 5	TWD 13	VSM	+0.90		VSM	VSM			150	COLD	560P2
20	10	0.10	121	2	SAI	06H	+2.56	TO+5.33	06H	06H	0.10		210	HOT	580PP
20	18	0.22	87	P 5	TWD 20	VSM	+0.00		07C	VSM			159	COLD	560P2
		0.38	133	P 2	TWD 16	VSM	+0.00		TEC	TEH			18	HOT	600UL
20	58	0.47	137	P 2	TWD 17	01H	+0.95		TEH	TEC			42	COLD	600UL
20	60	0.17	138	P 1	SCI	TSH	+0.15		TSH	TSH	0.0	18.37	169	HOT	580PP
20	108	0.12	94	P 5	TWD 11	DBC	+2.07		07C	DBC			145	COLD	560P2
		0.20	114	P 3	TWD 11	DBC	+1.09		TEH	TEC			8	COLD	600UL
21	67	0.37	58	P 3	TWD 16	DBH	+1.89		TEH	TEC			38	COLD	600UL
		0.36	125	P 2	TWD 18	VSM	+0.97		TEH	TEC			38	COLD	600UL
		0.22	112	P 5	TWD 17	VSM	+0.55		VSM	DBH			154	COLD	560P2
21	113	0.49	95	2	SAI	07C	+0.85		07C	07C			136	COLD	580PP
		0.47	96	P 2	TWD 21	07C	+0.90		STH	TEC			11	COLD	600UL
22	2	0.37	148	P 2	TWD 18	VSM	-0.89		TEC	TEH			9	HOT	600UL
		0.31	106	P 5	TWD 17	VSM	-0.89		DBC	VSM			161	COLD	560P2
22	10	0.23	112	P 2	TWD 12	03H	-0.90		TEC	TEH			13	HOT	600UL
22	58	0.45	125	2	SAI	04H	-0.24		04H	04H	0.00		272	HOT	580PP
22	62	0.42	17	2	SAI	TSH	-8.82		TSH	TSH	1.08	18.63	169	HOT	580PP
		0.43	18	2	SAI	TSH	-8.16		TSH	TSH	.32	18.63	169	HOT	580PP
22	66	0.42	24	P 1	SCI	TEH	+0.83		TEH	SBH	0.00	11.41	329	HOT	520ET
22	118	0.42	132	P 2	TWD 16	07H	+0.93		TEH	TEC			4	COLD	600UL
22	120	0.33	133	P 2	TWD 14	07H	-0.91		TEH	TEC			4	COLD	600UL
22	164	0.22	96	2	MAI	06H	-3.79		06H	06H	0.46		172	HOT	580PP

MAI, MCI, MMI, MVI, SAI, SCI, SVI, 0-100%

QUERY: rpc_icodes_and_0-100%twd.qry

ROW	LINE	VOLTS	DEG	CHN	IND	%TW	LOCATION		EXT	EXT	UTIL 1	UTIL 2	CAL #	LEG	PROBE
23	23	0.36	108	P 2	TWD	15	01H	+0.91	TEC	TEH			22	HOT	600UL
23	57	0.35	123	2	SAI		07H	-0.83	07H	07H	0.00		272	HOT	580PP
23	59	0.40	91	P 2	TWD	17	01H	+0.86	TEH	TEC			41	COLD	600UL
23	115	0.34	116	P 2	TWD	15	VSM	+0.82	TEH	TEC			5	COLD	600UL
		0.15	85	P 5	TWD	13	VSM	+0.82	VSM	VSM			145	COLD	560P2
23	169	0.27	47	P 2	TWD	11	02H	+0.88	TEC	TEH			37	HOT	600UL
24	18	0.12	98	P 5	TWD	10	VSM	-0.69	VSM	DBH			159	COLD	560P2
		0.23	69	P 2	TWD	10	VSM	-0.88	TEC	TEH			18	HOT	600UL
24	60	0.54	22	2	SAI		TSH	-15.96	TSH	TSH	0.0	18.06	169	HOT	580PP
		0.29	20	P 1	SCI		TSH	-0.06	TSH	TSH	1.04	18.06	169	HOT	580PP
24	138	0.55	164	P 3	TWD	23	DBH	+1.17	TEC	TEH			19	HOT	600UL
24	150	0.47	157	P 3	TWD	22	DBH	+1.29	TEC	TEH			28	HOT	600UL
24	152	0.39	24	P 1	SCI		TSH	-0.11	TSH	TSH	0.00	18.05	184	HOT	580PP
24	154	0.26	123	P 2	TWD	14	VSM	+0.26	TEC	TEH			28	HOT	600UL
		0.16	81	P 5	TWD	14	VSM	+0.40	VSM	VSM			150	COLD	560P2
25	109	0.98	28	2	SAI		TSH	-18.05	TSH	TSH	1.43	18.47	230	HOT	580PP
26	14	0.31	79	P 2	TWD	17	VSM	+0.89	TEC	TEH			17	HOT	600UL
26	110	1.17	22	2	SAI		TSH	-7.21	TSH	TSH	1.33	18.39	230	HOT	580PP
		0.22	126	2	SAI		TSH	+0.33	TSH	TSH	0.18		230	HOT	580PP
		0.15	118	2	SAI		TSH	+0.62	TSH	TSH	0.16		230	HOT	580PP
26	162	0.26	80	P 2	TWD	13	06H	-0.47	TEC	TEH			37	HOT	600UL
		0.21	103	2	SAI		06H	-0.43	06H	06H	0.61		247	HOT	580PP
27	21	0.36	61	P 2	TWD	15	03H	+0.99	TEC	TEH			22	HOT	600UL
27	23	0.47	83	P 2	TWD	19	07H	+0.61	TEC	TEH			22	HOT	600UL
27	111	0.17	88	P 1	MCI		TSH	+0.12	TSH	TSH	0.00	17.61	225	HOT	580PP
27	147	0.25	30	P 1	SCI		TSH	-0.11	TSH	TSH	0.48	18.91	254	HOT	580PP
28	42	0.35	27	P 1	SCI		TSH	-0.08	TSH	TSH	0.00	18.28	231	HOT	580PP
29	19	0.36	36	P 2	TWD	15	07H	+0.96	TEC	TEH			22	HOT	600UL
29	127	1.17	32	P 1	MCI		TSH	-10.82	TSH	TSH	2.65	18.52	198	HOT	580PP
		0.46	27	P 1	MCI		TSH	-7.59	TSH	TSH	1.40	18.52	198	HOT	580PP
30	18	0.30	155	P 3	TWD	14	DBH	-1.83	TEH	TEC			69	COLD	600UL
30	36	0.33	160	P 3	TWD	16	DBC	+1.97	TEC	TEH			30	HOT	600UL
30	70	0.49	86	P5	TWD	31	DBC	-2.21 TO+2.13	DBC	DBC			153	COLD	560P2
		0.30	147	P 3	TWD	15	DBC	-1.99	TEH	TEC	LAR		37	COLD	600UL
31	71	0.35	90	P 5	TWD	24	DBC	+1.94	DBC	DBC			153	COLD	560P2
		0.28	95	P 5	TWD	21	DBC	-1.94	DBC	DBC			153	COLD	560P2
		0.36	82	P 5	TWD	25	DBH	-1.87	DBH	DBH			153	COLD	560P2
		0.25	127	P 3	TWD	11	DBC	+1.67	TEH	TEC			37	COLD	600UL
		0.21	138	P 3	TWD	9	DBC	-1.71	TEH	TEC			37	COLD	600UL
		0.50	52	P 3	TWD	19	DBH	-1.74	TEH	TEC			37	COLD	600UL
31	117	0.30	143	P 2	TWD	13	07C	+0.34	TEH	TEC			6	COLD	600UL
32	22	0.32	77	P 2	TWD	13	07H	+0.81	TEC	TEH			22	HOT	600UL
33	13	0.36	99	P 2	TWD	19	VSM	+0.54	TEC	TEH			17	HOT	600UL
33	127	1.27	30	P 1	SCI		TSH	-8.34	TSH	TSH	2.05	18.48	198	HOT	580PP
35	13	0.36	87	P 2	TWD	15	04H	-0.87	TEC	TEH			18	HOT	600UL

MAI, MCI, MMI, MVI, SAI, SCI, SVI, 0-100%

QUERY: rpc_icodes_and_0-100%twd.qry

ROW	LINE	VOLTS	DEG	CHN	IND	%TW	LOCATION		EXT	EXT	UTIL 1	UTIL 2	CAL #	LEG	PROBE
35	21	0.45	35	P 2	TWD	18	02H +0.91		TEC	TEH			22	HOT	600UL
35	61	0.20	151	P 1	SCI		TSH +0.06		TSH	TSH	0.0	18.04	169	HOT	580PP
35	115	0.17	139	P 1	SCI		TSH +0.10		TSH	TSH	0.00	19.11	226	HOT	580PP
36	40	0.10	94	2	SAI		01H +15.52		01H	01H	0.00		228	HOT	580PP
		0.10	103	2	SAI		01H +17.44		01H	01H	0.00		228	HOT	580PP
36	104	0.29	90	P 5	TWD	22	DBC -1.75		DBC	DBC			145	COLD	560P2
		0.26	86	P 3	TWD	14	DBC -2.22		TEH	TEC			8	COLD	600UL
36	114	0.36	96	P 2	TWD	16	02H +0.88		TEH	TEC			5	COLD	600UL
36	126	0.32	26	P 1	SCI		TSH -4.32		TSH	TSH	0.13	19.07	198	HOT	580PP
36	132	0.50	22	P 1	SCI		TSH -6.64		TSH	TSH	0.53	18.51	161	HOT	580PP
36	134	0.35	18	P 1	SCI		TSH -8.22		TSH	TSH	0.0	18.48	161	HOT	580PP
37	59	0.19	79	P 1	SCI		TSH +0.09		TSH	TSH	.37	21.67	169	HOT	580PP
37	75	0.71	77	P 5	TWD	38	DBC -2.16	TO+2.27	DBC	DBC			153	COLD	560P2
		0.88	76	P 5	TWD	43	DBH -2.20	TO+1.97	DBH	DBH			153	COLD	560P2
		1.13	86	P 3	TWD	33	DBH -1.39		TEH	TEC			36	COLD	600UL
		0.54	163	P 3	TWD	20	DBC +1.60		TEH	TEC			36	COLD	600UL
		0.62	98	P 3	TWD	22	DBC -2.25		TEH	TEC			36	COLD	600UL
37	101	0.26	81	P 3	TWD	13	DBC +1.91		TEC	TEH		AAS	16	HOT	600UL
		0.33	96	P 5	TWD	22	DBC +1.92		DBC	DBC			152	COLD	560P2
37	103	0.42	76	P 5	TWD	29	DBH -1.85		DBH	DBH			145	COLD	560P2
		0.24	40	P 3	TWD	13	DBH -1.48		TEH	TEC			7	COLD	600UL
37	105	0.13	95	P 5	TWD	11	DBH -2.12		VSM	DBH			145	COLD	560P2
38	4	0.31	55	P 2	TWD	16	01C +0.09		TEC	TEH			13	HOT	600UL
		0.29	72	P 2	TWD	15	02C -0.88		TEC	TEH			13	HOT	600UL
		0.23	104	P 5	TWD	16	01C +0.11		01C	01C			139	COLD	580PP
		0.27	102	P 5	TWD	18	02C -1.04		02C	02C			139	COLD	580PP
38	20	0.22	129	P 3	TWD	12	DBH +0.79		TEC	TEH			25	HOT	600UL
		0.22	129	P 3	TWD	12	DBH -0.10		TEC	TEH			25	HOT	600UL
		0.15	98	P 5	TWD	11	DBH +0.79		VSM	DBH			158	COLD	560P2
38	40	0.84	28	P 1	SCI		TSH -10.21		TSH	TSH	1.26	17.57	227	HOT	580PP
38	60	0.18	104	2	SAI		TSH +1.00		TSH	TSH	0.00	18.73	170	HOT	580PP
38	116	0.66	20	2	SAI		TSH -6.02		TSH	TSH	1.00	18.38	222	HOT	580PP
38	128	0.38	52	P 3	TWD	16	DBH +2.24		TEH	TEC			58	COLD	600UL
38	156	0.32	61	P 2	TWD	15	03H -0.72		TEC	TEH			33	HOT	600UL
39	21	0.39	87	P 2	TWD	16	VSM +0.74		TEC	TEH			22	HOT	600UL
39	59	0.23	71	2	SAI		TSH +0.18		TSH	TSH	0.00	22.46	170	HOT	580PP
39	67	0.30	114	2	SAI		TSH -0.07		TSH	TSH	0.40	17.97	173	HOT	580PP
39	69	0.62	17	P 1	SCI		TSH -12.09		TSH	TSH	0.67	17.87	173	HOT	580PP
39	73	4.06	35	2	SAI		TSH -10.15		TSH	TSH	4.25	17.80	178	HOT	580PP
		0.64	21	2	SAI		TSH -9.19		TSH	TSH	0.42		178	HOT	580PP
		0.43	18	2	SAI		TSH -1.21		TSH	TSH	0.41		178	HOT	580PP
		0.63	83	P 5	TWD	36	DBC -1.89		DBC	DBC			153	COLD	560P2
		0.61	82	P 3	TWD	22	DBC -1.56		TEH	TEC			36	COLD	600UL
39	127	14.03	46	P 1	SCI		TSH -9.34		TSH	TSH	14.03	18.86	198	HOT	580PP
		1.57	27	P 1	SCI		TSH -7.81		TSH	TSH	1.54		198	HOT	580PP
40	62	0.41	22	P 3	TWD	19	DBC -0.51		TEH	TEC			40	COLD	600UL
40	140	0.34	106	P 2	TWD	16	VSM -0.89		TEC	TEH			23	HOT	600UL

MAI, MCI, MMI, MVI, SAI, SCI, SVI, 0-100%

QUERY: rpc_icodes_and_0-100%twd.qry

ROW	LINE	VOLTS	DEG	CHN	IND	%TW	LOCATION		EXT	EXT	UTIL 1	UTIL 2	CAL #	LEG	PROBE
41	47	0.46	63	P 2	TWD	19	02H	-1.19	TEH	TEC			45	COLD	600UL
41	63	0.33	51	P 2	TWD	17	02H	+0.96	TEH	TEC			38	COLD	600UL
		0.32	58	P 2	TWD	16	06H	+0.87	TEH	TEC			38	COLD	600UL
41	73	0.16	105	P 5	TWD	13	DBC	-1.83	DBC	DBC			153	COLD	560P2
		0.24	50	P 3	TWD	12	DBC	-1.80	TEH	TEC			37	COLD	600UL
41	75	0.32	102	P 5	TWD	23	DBC	+2.21	DBC	DBC			153	COLD	560P2
		0.16	87	P 5	TWD	13	DBC	-1.59	DBC	DBC			153	COLD	560P2
		0.41	123	P 3	TWD	16	DBC	+1.69	TEH	TEC	LAR		36	COLD	600UL
41	101	0.37	94	P 3	TWD	17	DBC	+1.75	TEC	TEH			16	HOT	600UL
		0.43	72	P 5	TWD	27	DBC	+1.92	DBC	DBC			152	COLD	560P2
41	103	0.25	72	P 2	TWD	13	VSM	+0.87	STH	TEC			11	COLD	600UL
		0.20	86	P 5	TWD	16	VSM	+0.79	VSM	VSM			145	COLD	560P2
41	143	0.44	150	P 2	TWD	20	VSM	+0.65	TEC	TEH			23	HOT	600UL
41	159	0.35	90	P 2	TWD	14	01H	+1.15	TEH	TEC			61	COLD	600UL
42	110	0.53	68	P 2	TWD	20	VSM	-0.15	TEH	TEC			6	COLD	600UL
		1.20	112	P 2	TWD	34	VSM	+0.98	TEH	TEC			6	COLD	600UL
		0.34	92	P 5	TWD	24	VSM	-0.15	VSM	VSM			145	COLD	560P2
		0.47	88	P 5	TWD	31	VSM	+0.98	VSM	VSM			145	COLD	560P2
42	124	0.80	17	2	SAI		TSH	-12.60	TSH	TSH	0.80	18.35	208	HOT	580PP
		1.19	25	P 1	MCI		TSH	-11.31	TSH	TSH	0.93		208	HOT	580PP
		0.82	30	P 1	MCI		TSH	-8.55	TSH	TSH	1.44		208	HOT	580PP
42	168	0.50	147	P 2	TWD	22	VSM	+1.06	TEC	TEH			36	HOT	600UL
		0.35	89	P 5	TWD	26	VSM	+1.04	VSM	VSM			150	COLD	560P2
42	170	0.62	105	P 2	TWD	24	VSM	-0.25	TEC	TEH			37	HOT	600UL
		0.36	91	P 5	TWD	26	VSM	-0.46	VSM	VSM			150	COLD	560P2
43	65	0.14	97	P 1	SCI		TSH	-0.05	TSH	TSH	0.33	18.02	173	HOT	580PP
43	79	0.74	69	P 3	TWD	26	DBH	+2.08	TEC	TEH			11	HOT	600UL
		0.69	76	P 5	TWD	39	DBH	+1.70	DBH	DBH			151	COLD	560P2
43	101	0.61	106	P 3	TWD	24	DBC	+1.77	TEC	TEH			15	HOT	600UL
		0.70	83	P 5	TWD	38	DBC	+2.00	DBC	DBC			152	COLD	560P2
44	18	0.14	94	P 5	TWD	12	VSM	-0.71	VSM	DBH			159	COLD	560P2
		0.14	84	P 5	TWD	12	VSM	+0.91	VSM	DBH			159	COLD	560P2
		0.16	39	P 2	TWD	7	VSM	+0.63	TEC	TEH			22	HOT	600UL
		0.32	144	P 2	TWD	14	VSM	-0.90	TEC	TEH			22	HOT	600UL
44	74	0.60	80	P 5	TWD	35	DBC	-2.18	DBC	DBC			153	COLD	560P2
		0.27	78	P 5	TWD	20	DBC	+1.98	DBC	DBC			153	COLD	560P2
		0.46	71	P 3	TWD	18	DBC	-2.24	TEH	TEC			36	COLD	600UL
		0.33	173	P 3	TWD	14	DBC	+1.92	TEH	TEC			36	COLD	600UL
44	100	1.05	77	P 5	TWD	47	DBC	+1.76	DBC	DBC			152	COLD	560P2
		0.15	92	P 5	TWD	11	DBC	-1.78	DBC	DBC			152	COLD	560P2
		1.25	91	P 3	TWD	36	DBC	+2.16	TEC	TEH		AAS	16	HOT	600UL
		0.18	85	P 3	TWD	9	DBC	-1.82	TEC	TEH			16	HOT	600UL
44	104	0.22	89	P 5	TWD	18	VSM	+0.81	VSM	VSM			145	COLD	560P2
		0.16	89	P 5	TWD	14	VSM	-0.91	VSM	VSM			145	COLD	560P2
		0.56	58	P 2	TWD	23	VSM	+0.87	TEH	TEC	LAR		8	COLD	600UL
44	112	0.54	131	P 2	TWD	21	VSM	-0.91	TEH	TEC			5	COLD	600UL
		0.27	84	P 5	TWD	21	VSM	-0.78	VSM	VSM			145	COLD	560P2
44	150	0.24	143	P 2	TWD	13	01H	+0.99	TEC	TEH			28	HOT	600UL
45	19	0.33	69	P 2	TWD	14	03H	+0.82	TEC	TEH			22	HOT	600UL
45	47	0.33	26	2	SAI		TSH	-4.74	TEH	TSH	0.31	23.00	159	HOT	580PP
45	63	0.33	117	P 2	TWD	17	VSM	-0.85	TEH	TEC			38	COLD	600UL
45	67	0.49	18	2	SAI		TSH	-3.44	TSH	TSH	0.34	18.01	173	HOT	580PP

MAI, MCI, MMI, MVI, SAI, SCI, SVI, 0-100%

QUERY: rpc_icodes_and_0-100%twd.qry

ROW	LINE	VOLTS	DEG	CHN	IND	%TW	LOCATION		EXT	EXT	UTIL 1	UTIL 2	CAL #	LEG	PROBE
45	73	0.34	81	P 5	TWD	24	DBC	-1.79	DBC	DBC			153	COLD	560P2
		0.40	88	P 3	TWD	18	DBC	-1.99	TEH	TEC			37	COLD	600UL
		0.47	16	2	SAI		TSH	-0.72	TSH	TSH	0.30	18.92	278	HOT	580PP
		0.37	11	2	SAI		TSH	-0.42	TSH	TSH	0.11		278	HOT	580PP
45	101	1.01	91	P 3	TWD	32	DBC	+2.18	TEC	TEH		AAS	16	HOT	600UL
		0.85	76	P 5	TWD	42	DBC	+1.27	DBC	DBC			152	COLD	560P2
45	103	0.18	91	P 5	TWD	15	VSM	-0.18	VSM	VSM			145	COLD	560P2
		0.14	90	P 5	TWD	12	VSM	-1.02	VSM	VSM			145	COLD	560P2
		0.41	81	P 5	TWD	28	VSM	+0.89	VSM	VSM	AEC		145	COLD	560P2
		0.51	106	P 2	TWD	24	VSM	+0.89	TEH	TEC			7	COLD	600UL
		0.15	91	P 2	TWD	10	VSM	+0.02	TEH	TEC			7	COLD	600UL
		0.15	29	P 2	TWD	10	VSM	-0.82	TEH	TEC			7	COLD	600UL
45	119	0.09	126	2	SAI		01H	+5.86	01H	01H	0.19		221	HOT	580PP
		0.09	106	2	SAI		01H	+4.20	01H	01H	0.11		221	HOT	580PP
45	145	0.32	118	P 2	TWD	16	VSM	-0.91	TEC	TEH			23	HOT	600UL
		0.17	101	P 5	TWD	15	VSM	-0.93	VSM	VSM			149	COLD	560P2
45	147	0.41	149	P 2	TWD	19	VSM	-0.75	TEC	TEH			23	HOT	600UL
45	167	0.44	135	P 2	TWD	18	VSM	+0.77	TEC	TEH			37	HOT	600UL
46	44	3.53	31	2	SAI		TSH	-8.24	TSH	TSH	3.78	17.49	232	HOT	580PP
46	72	0.37	17	2	SAI		TSH	-2.67	TSH	TSH	0.0	17.82	279	HOT	580PP
46	104	0.37	90	P 5	TWD	26	VSM	+0.00	VSM	VSM			145	COLD	560P2
		0.24	92	P 5	TWD	19	VSM	-0.87	VSM	VSM			145	COLD	560P2
		0.22	105	P 5	TWD	18	VSM	+0.64	VSM	VSM			145	COLD	560P2
		0.55	52	P 2	TWD	25	VSM	-0.78	TEH	TEC			7	COLD	600UL
		0.14	48	P 2	TWD	8	VSM	+0.10	TEH	TEC			7	COLD	600UL
46	128	0.30	123	P 2	TWD	13	VSM	-0.89	TEH	TEC			58	COLD	600UL
		0.14	104	P 5	TWD	13	VSM	-1.02	VSM	VSM			145	COLD	560P2
46	130	1.49	21	2	SAI		TSH	-14.96	TSH	TSH	1.49	18.94	162	HOT	580PP
46	132	0.11	100	2	SAI		01H	+2.60	01H	01H	.18		171	HOT	580PP
		0.12	122	2	MAI		07H	+18.60 TO+19.62	07H	DBH	0.00		165	COLD	560P2
46	136	0.94	24	2	SAI		TSH	-14.55	TSH	TSH	1.09		162	HOT	580PP
		1.14	24	2	SAI		TSH	-14.76	TSH	TSH	1.17	18.20	162	HOT	580PP
		0.22	129	2	SAI		TSH	+0.84	TSH	TSH	0.0		162	HOT	580PP
46	154	0.49	67	P 2	TWD	21	03H	-0.88	TEC	TEH			29	HOT	600UL
46	156	0.54	110	P 2	TWD	22	VSM	-1.22	TEC	TEH			33	HOT	600UL
		0.20	67	P 2	TWD	11	VSM	+0.78	TEC	TEH			33	HOT	600UL
		0.30	81	P 5	TWD	23	VSM	-0.98	VSM	VSM			150	COLD	560P2
		0.12	89	P 5	TWD	10	VSM	+0.71	VSM	VSM			150	COLD	560P2
46	162	0.27	81	P 2	TWD	11	VSM	+0.89	TEC	TEH			37	HOT	600UL
		0.17	88	P 5	TWD	14	VSM	+0.74	VSM	VSM			150	COLD	560P2
46	170	0.25	45	P 3	TWD	13	DBC	+1.54	TEC	TEH			37	HOT	600UL
		0.18	93	P 5	TWD	15	DBC	+1.62	DBC	DBC			150	COLD	560P2
47	15	0.18	121	2	SAI		DBH	+1.68	DBC	DBH	0.00		159	COLD	560P2
		0.27	130	P 3	TWD	12	DBH	+1.07	TEC	TEH			18	HOT	600UL
47	33	0.46	55	P 3	TWD	21	DBH	+1.70	TEC	TEH			26	HOT	600UL
47	41	0.50	10	2	SAI		TSH	-11.41	TSH	TSH	0.60	17.81	227	HOT	580PP
		0.55	10	2	SAI		TSH	-3.48	TSH	TSH	0.59		227	HOT	580PP
47	45	2.80	31	2	SAI		TEH	+6.43	TEH	SBH	4.07	11.34	329	HOT	520ET
47	51	0.11	132	P 1	SCI		TSH	+0.14	TSH	TSH	0.06	22.09	160	HOT	580PP
47	77	1.10	131	P 3	TWD	34	DBC	+1.87	TEC	TEH			12	HOT	600UL
		0.82	82	P 5	TWD	43	DBC	+1.90	DBC	DBC			151	COLD	560P2

MAI, MCI, MMI, MVI, SAI, SCI, SVI, 0-100%

QUERY: rpc_icodes_and_0-100%twd.qry

ROW	LINE	VOLTS	DEG	CHN	IND	%TW	LOCATION			EXT	EXT	UTIL 1	UTIL 2	CAL #	LEG	PROBE
47	101	0.34	147	P 3	TWD	15	DBH	-1.98		TEC	TEH			15	HOT	600UL
		0.96	68	P 3	TWD	31	DBC	+1.75		TEC	TEH			15	HOT	600UL
		0.34	86	P 5	TWD	23	DBH	-1.83		DBH	DBH			152	COLD	560P2
		0.96	76	P 5	TWD	45	DBC	+1.44		DBC	DBC			152	COLD	560P2
47	109	0.18	85	2	SAI		TSH	+0.24		TSH	TSH	0.00	18.35	230	HOT	580PP
47	121	0.26	140	P 2	TWD	10	VSM	-0.86		TEH	TEC			4	COLD	600UL
		0.19	84	P 5	TWD	16	VSM	-0.88		VSM	VSM			145	COLD	560P2
48	6	0.38	78	P 2	TWD	18	08C	-1.72		TEC	TEH		LOCOK	13	HOT	600UL
		0.14	88	P 5	TWD	11	08C	-1.72		08C	DBC			160	COLD	560P2
48	8	0.30	128	P 2	TWD	14	02C	+0.94		TEC	TEH			14	HOT	600UL
		0.21	104	P 5	TWD	15	02C	+0.85		02C	02C			139	COLD	580PP
48	14	0.25	75	2	SAI		06H	-1.30	TO-7.29	06H	06H	0.15		209	HOT	580PP
48	34	0.19	24	P 2	TWD	10	VSM	-0.66		TEC	TEH			30	HOT	600UL
		0.18	101	P 5	TWD	13	VSM	-0.66		VSM	VSM			157	COLD	560P2
48	66	0.99	157	P 2	TWD	29	VSM	-0.82		TEH	TEC			40	COLD	600UL
		0.64	80	P 5	TWD	36	VSM	-0.93		VSM	VSM			153	COLD	560P2
48	74	0.14	119	P 1	SCI		TSH	+0.08		TSH	TSH	1.28	17.23	177	HOT	580PP
		0.30	86	P 5	TWD	22	DBC	-1.95		DBC	DBC			153	COLD	560P2
		0.17	92	P 5	TWD	14	DBC	+2.19		DBC	DBC			153	COLD	560P2
		0.36	131	P 3	TWD	17	DBC	-1.92		TEH	TEC	LAR		37	COLD	600UL
48	100	0.44	90	P 5	TWD	28	DBC	+2.10		08C	DBC			152	COLD	560P2
		0.53	62	P 3	TWD	22	DBC	+2.17		TEC	TEH		AAS	16	HOT	600UL
48	108	0.28	88	2	SAI		TSH	+0.18		TSH	TSH	0.20	19.00	229	HOT	580PP
48	118	0.46	67	P 2	TWD	19	04H	-1.15		TEH	TEC			3	COLD	600UL
		0.17	87	P 5	TWD	11	04H	-1.15		04H	04H			222	HOT	580PP
48	146	0.47	151	P 3	TWD	20	DBH	+1.22		TEC	TEH			23	HOT	600UL
48	158	0.66	158	P 2	TWD	23	VSM	-0.62		TEH	TEC			61	COLD	600UL
		0.17	97	P 5	TWD	14	VSM	+0.90		VSM	VSM			150	COLD	560P2
		0.34	88	P 5	TWD	26	VSM	-0.87		VSM	VSM			150	COLD	560P2
49	9	0.29	86	P 2	TWD	15	VSM	-0.76		TEC	TEH		AAS	13	HOT	600UL
49	39	0.29	137	P 2	TWD	13	VSM	-0.77		TEC	TEH			31	HOT	600UL
49	49	0.40	64	P 2	TWD	16	08H	+1.70		TEH	TEC		LOCOK	44	COLD	600UL
49	53	0.53	98	P 2	TWD	17	08C	-1.44		TEH	TEC		LOCOK	43	COLD	600UL
49	59	0.15	102	2	MAI		TSH	+1.56	TO+2.25	TSH	TSH	0.0	19.65	169	HOT	580PP
49	65	0.28	108	P 2	TWD	10	VSM	-0.81		TEH	TEC			40	COLD	600UL
49	75	0.34	115	P 3	TWD	15	DBC	-1.75		TEH	TEC			70	COLD	600UL
		0.30	82	P 5	TWD	22	DBC	-2.01		08C	DBC			153	COLD	560P2
49	77	0.43	90	P 3	TWD	18	DBC	-1.96		TEC	TEH			11	HOT	600UL
		0.16	112	P 3	TWD	8	DBC	+1.52		TEC	TEH			11	HOT	600UL
		0.29	87	P 2	TWD	14	08H	+0.89		TEC	TEH			11	HOT	600UL
		0.30	94	P 5	TWD	22	DBC	-1.95		08C	DBC			151	COLD	560P2
		0.24	98	P 5	TWD	19	DBC	+1.71		08C	DBC			151	COLD	560P2
		0.18	116	2	SAI		08C	-1.32		08C	DBC	0.11		151	COLD	560P2
49	79	0.34	87	P 2	TWD	15	08C	-1.50		TEC	TEH		LOCOK	11	HOT	600UL
		0.24	105	P 2	TWD	12	08C	+1.35		TEC	TEH		LOCOK	11	HOT	600UL
		0.22	135	P 2	TWD	11	08H	+1.46		TEC	TEH		LOCOK	11	HOT	600UL
49	99	0.55	81	P 5	TWD	32	DBC	-1.85		08C	DBC			152	COLD	560P2
		0.58	83	P 5	TWD	34	DBH	-1.94		DBH	08H			152	COLD	560P2
		0.67	88	P 3	TWD	25	DBC	-1.75		TEC	TEH			15	HOT	600UL
		0.57	94	P 3	TWD	23	DBH	-1.75		TEC	TEH			15	HOT	600UL
49	103	0.16	114	P 5	TWD	13	VSM	-0.79		VSM	VSM			146	COLD	560P2
		0.24	118	P 2	TWD	14	VSM	-0.88		TEH	TEC			7	COLD	600UL

MAI, MCI, MMI, MVI, SAI, SCI, SVI, 0-100%

QUERY: rpc_icodes_and_0-100%twd.qry

ROW	LINE	VOLTS	DEG	CHN	IND	%TW	LOCATION		EXT	EXT	UTIL 1	UTIL 2	CAL #	LEG	PROBE
49	113	0.31	93	P 2	TWD	16	08H	-1.21	STH	TEC			11	COLD	600UL
49	121	0.36	119	P 2	TWD	16	08H	-0.86	TEH	TEC			3	COLD	600UL
49	145	0.49	55	P 2	TWD	22	08H	-1.01	TEC	TEH		LOCOK	23	HOT	600UL
49	159	0.50	90	P 2	TWD	19	VSM	+0.71	TEH	TEC			61	COLD	600UL
		0.21	98	P 5	TWD	17	VSM	+0.86	VSM	VSM			150	COLD	560P2
		0.19	94	P 5	TWD	16	VSM	+0.25	VSM	VSM			150	COLD	560P2
50	44	0.31	116	P 2	TWD	13	VSM	-0.81	TEC	TEH			35	HOT	600UL
50	64	0.50	107	P 2	TWD	18	08H	-1.45	TEH	TEC		LOCOK	40	COLD	600UL
		0.57	140	P 2	TWD	20	08H	+1.43	TEH	TEC		LOCOK	40	COLD	600UL
50	74	0.27	85	P 5	TWD	20	DBC	-2.03	08C	DBC			153	COLD	560P2
		0.47	86	P 5	TWD	30	DBC	+2.09	08C	DBC			153	COLD	560P2
		0.68	163	P 3	TWD	24	DBC	+1.96	TEH	TEC			36	COLD	600UL
		0.23	92	P 3	TWD	10	DBC	-2.24	TEH	TEC			36	COLD	600UL
50	76	0.41	108	P 3	TWD	19	DBC	-1.62	TEC	TEH			60	HOT	600UL
		0.34	83	P 5	TWD	25	DBC	-1.66	DBC	DBC			151	COLD	560P2
50	78	0.49	104	P 3	TWD	21	DBC	+1.98	TEC	TEH		AAS	12	HOT	600UL
		0.36	139	P 3	TWD	16	DBC	-1.74	TEC	TEH			12	HOT	600UL
		0.33	92	2	SAI		TSH	+0.55	TSH	TSH	0.00	17.26	181	HOT	580PP
		0.06	76	2	SAI		TSH	+0.98	TSH	TSH	0.00		181	HOT	580PP
		0.15	63	2	SAI		TSH	+1.11	TSH	TSH	0.00		181	HOT	580PP
		0.15	94	2	SAI		TSH	+1.26	TSH	TSH	0.00		181	HOT	580PP
		0.24	97	2	SAI		TSH	+1.60	TSH	TSH	0.00		181	HOT	580PP
		0.36	87	P 5	TWD	25	DBC	+2.05	08C	DBC			151	COLD	560P2
		0.34	82	P 5	TWD	24	DBC	-1.96	08C	DBC			151	COLD	560P2
50	82	0.46	143	P 3	TWD	19	DBC	-1.59	TEC	TEH			11	HOT	600UL
		0.72	67	P 3	TWD	26	DBC	+1.61	TEC	TEH			11	HOT	600UL
		0.44	115	P 3	TWD	18	DBH	-1.61	TEC	TEH			11	HOT	600UL
		0.18	97	P 3	TWD	9	DBH	+1.75	TEC	TEH			11	HOT	600UL
		0.18	76	P 5	TWD	15	DBH	+1.80	DBH	08H			151	COLD	560P2
		0.30	89	P 5	TWD	22	DBH	-1.78	DBH	08H			151	COLD	560P2
		0.48	89	P 5	TWD	31	DBC	-1.83	08C	DBC			151	COLD	560P2
		0.65	83	P 5	TWD	38	DBC	+1.94	08C	DBC			151	COLD	560P2
50	158	0.44	72	P 2	TWD	20	08H	-1.15	TEC	TEH			33	HOT	600UL
51	51	0.34	117	2	SAI		TSH	+0.31	TSH	TSH	0.45	21.19	160	HOT	580PP
		0.28	100	P 1	SCI		TSH	+0.14	TSH	TSH	.24	21.19	160	HOT	580PP
		0.45	20	P 1	SCI		TSH	-0.15	TSH	TSH	.09	21.19	160	HOT	580PP
51	61	0.89	21	2	SAI		TSH	-14.07	TSH	TSH	0.53	18.67	170	HOT	580PP
		0.42	55	P 2	TWD	15	08C	-0.91	TEH	TEC			40	COLD	600UL
		0.35	77	2	SAI		08C	-0.82	08C	08C	0.52		137	COLD	580PP
51	75	0.47	87	P 5	TWD	30	DBC	-2.24 TO+0.50	08C	DBC			153	COLD	560P2
		0.53	86	P 3	TWD	20	DBC	-1.76	STH	TEC			66	COLD	600UL
51	95	0.70	78	P 5	TWD	38	DBC	+1.63	08C	DBC			161	COLD	560P2
		0.43	85	P 5	TWD	27	DBH	+1.57	DBH	08H			152	COLD	560P2
		0.38	114	P 3	TWD	17	DBH	+1.82	TEC	TEH			16	HOT	600UL
		0.99	74	P 3	TWD	32	DBC	+1.45	TEC	TEH			16	HOT	600UL
51	97	0.63	79	P 5	TWD	35	DBH	-1.74	DBH	DBH			152	COLD	560P2
		0.83	82	P 5	TWD	42	DBC	-1.83	08C	DBC			152	COLD	560P2
		1.17	84	P 3	TWD	35	DBC	-1.72	TEC	TEH			15	HOT	600UL
		0.55	83	P 3	TWD	22	DBH	-2.25	TEC	TEH			15	HOT	600UL
51	107	0.20	123	P 1	SCI		TSH	+0.10	TSH	TSH	0.00	18.99	229	HOT	580PP
51	121	0.40	105	P 2	TWD	15	08H	+1.07	TEH	TEC			4	COLD	600UL
51	169	0.28	123	P 2	TWD	15	VH3	+0.75	TEC	TEH			36	HOT	600UL
52	14	0.30	37	P 2	TWD	13	03H	+1.13	TEC	TEH			18	HOT	600UL
52	16	0.50	83	P 2	TWD	24	VH3	-1.04	TEC	TEH			17	HOT	600UL

MAI, MCI, MMI, MVI, SAI, SCI, SVI, 0-100%

QUERY: rpc_icodes_and_0-100%twd.qry

ROW	LINE	VOLTS	DEG	CHN	IND	%TW	LOCATION		EXT	EXT	UTIL 1	UTIL 2	CAL #	LEG	PROBE
52	18	0.69	154	P 2	TWD	24	VH3	-1.04	TEC	TEH			22	HOT	600UL
52	28	0.30	32	P 3	TWD	12	DBC	+2.01	TEC	TEH			27	HOT	600UL
52	76	0.42	84	P 3	TWD	17	DBC	-1.49	TEC	TEH			11	HOT	600UL
		0.38	82	P 5	TWD	26	DBC	-1.86	08C	DBC			151	COLD	560P2
52	80	0.57	90	P 3	TWD	22	DBC	-1.85	TEC	TEH			11	HOT	600UL
		0.42	81	P 5	TWD	29	DBC	-1.91	DBC	DBC			151	COLD	560P2
52	84	0.63	110	P 3	TWD	24	DBH	+1.29	TEC	TEH			11	HOT	600UL
		0.32	101	P 3	TWD	14	DBH	-1.19	TEC	TEH			11	HOT	600UL
		0.26	160	P 3	TWD	11	DBC	-1.78	TEC	TEH			11	HOT	600UL
		0.44	119	P 3	TWD	18	DBC	+2.12	TEC	TEH			11	HOT	600UL
		0.55	84	P 5	TWD	34	DBH	+1.69	DBH	DBH			151	COLD	560P2
		0.21	93	P 5	TWD	17	DBH	-1.68	DBH	DBH			151	COLD	560P2
		0.33	85	P 5	TWD	24	DBC	+1.82	08C	DBC			151	COLD	560P2
		0.24	88	P 5	TWD	18	DBC	-1.81	08C	DBC			151	COLD	560P2
52	96	0.42	85	P 5	TWD	27	DBH	-1.88	DBH	DBH			152	COLD	560P2
		0.28	161	P 3	TWD	13	DBH	-1.73	TEC	TEH		AAS	16	HOT	600UL
52	160	0.56	27	P 2	TWD	23	VH3	-1.05	TEC	TEH			33	HOT	600UL
53	77	0.38	89	P 3	TWD	16	DBC	-1.83	TEC	TEH			11	HOT	600UL
		0.37	85	P 5	TWD	26	DBC	-1.81	08C	DBC			151	COLD	560P2
53	81	0.21	112	P 3	TWD	9	DBC	-1.96	TEC	TEH			11	HOT	600UL
		0.22	99	P 5	TWD	18	DBC	-1.90	DBC	DBC			151	COLD	560P2
53	83	0.69	129	P 3	TWD	25	DBH	+1.33	TEC	TEH			11	HOT	600UL
		1.07	91	P 3	TWD	33	DBC	-1.66	TEC	TEH			11	HOT	600UL
		0.64	81	P 5	TWD	38	DBH	+1.81	DBH	DBH			151	COLD	560P2
		0.87	79	P 5	TWD	44	DBC	-1.80	08C	DBC			151	COLD	560P2
53	95	0.28	85	P 5	TWD	20	DBH	+1.85	DBH	DBH			152	COLD	560P2
		0.27	76	P 3	TWD	13	DBH	+1.75	TEC	TEH			15	HOT	600UL
53	125	0.20	72	P 1	SCI		TSH	+0.05	TSH	TSH	0.00	18.91	198	HOT	580PP
54	8	0.24	84	P 2	TWD	13	01C	+0.13	TEC	TEH			13	HOT	600UL
		0.26	102	P 5	TWD	18	01C	+0.14	01C	01C			139	COLD	580PP
54	12	0.39	67	P 2	TWD	16	VH3	+0.72	TEC	TEH			18	HOT	600UL
54	14	0.32	73	P 2	TWD	17	VSM	-0.90	TEC	TEH			17	HOT	600UL
54	22	0.18	89	P 3	TWD	10	DBH	-1.06	TEC	TEH			25	HOT	600UL
54	32	0.34	110	P 2	TWD	16	VH3	-0.87	TEC	TEH			26	HOT	600UL
54	66	0.31	69	P 2	TWD	16	VSM	-0.73	TEH	TEC			38	COLD	600UL
54	78	0.18	95	2	SAI		TSH	+0.97	TSH	TSH	0.49	17.61	181	HOT	580PP
54	94	0.72	80	P 5	TWD	38	DBH	-1.79	DBH	DBH			152	COLD	560P2
		0.20	102	P 5	TWD	15	DBC	-1.84	DBC	DBC			152	COLD	560P2
		0.79	118	P 3	TWD	28	DBH	-2.14	TEC	TEH			16	HOT	600UL
		0.39	80	P 3	TWD	18	DBC	-1.99	TEC	TEH		AAS	16	HOT	600UL
54	146	0.30	141	P 2	TWD	15	VH3	-0.81	TEC	TEH			24	HOT	600UL
54	150	0.37	63	P 2	TWD	17	VH3	-1.01	TEC	TEH			29	HOT	600UL
55	11	0.35	123	P 2	TWD	17	VH3	-0.81	TEC	TEH			13	HOT	600UL
55	15	0.32	117	P 2	TWD	14	VH3	-0.82	TEC	TEH			18	HOT	600UL
55	21	0.31	144	P 2	TWD	13	VH3	+0.85	TEC	TEH			22	HOT	600UL
55	79	0.31	34	P 3	TWD	15	DBC	-1.80	TEC	TEH			12	HOT	600UL
		0.25	88	P 5	TWD	19	DBC	-1.88	DBC	DBC			151	COLD	560P2
55	85	0.34	96	P 3	TWD	15	DBH	+1.38	TEC	TEH			11	HOT	600UL
		0.55	83	P 5	TWD	34	DBH	+1.74	DBH	DBH			151	COLD	560P2

MAI, MCI, MMI, MVI, SAI, SCI, SVI, 0-100%

QUERY: rpc_icodes_and_0-100%twd.qry

ROW	LINE	VOLTS	DEG	CHN	IND	%TW	LOCATION		EXT	EXT	UTIL 1	UTIL 2	CAL #	LEG	PROBE
55	91	0.35	100	P 5	TWD	23	DBC	+1.95	DBC	DBC			152	COLD	560P2
		0.30	75	P 3	TWD	13	DBC	+1.93	TEC	TEH			11	HOT	600UL
		0.32	117	P 2	TWD	14	01H	-0.18	TEC	TEH			11	HOT	600UL
55	97	0.21	69	P 2	TWD	10	05H	+0.80	TEC	TEH			15	HOT	600UL
55	151	0.36	31	P 2	TWD	17	VH3	+0.74	TEC	TEH			29	HOT	600UL
55	165	0.32	72	P 2	TWD	16	VH3	-0.80	TEC	TEH			36	HOT	600UL
56	8	0.34	70	P 2	TWD	17	VH3	+0.76	TEC	TEH			13	HOT	600UL
56	10	0.32	28	P 2	TWD	16	VH3	-0.96	TEC	TEH			13	HOT	600UL
56	12	0.38	137	P 2	TWD	20	VH3	-0.81	TEC	TEH			17	HOT	600UL
56	16	0.37	145	P 2	TWD	20	VH3	-0.96	TEC	TEH			17	HOT	600UL
56	18	0.28	130	P 2	TWD	12	VH3	+0.73	TEC	TEH			22	HOT	600UL
		0.44	101	P 2	TWD	18	VH3	-0.84	TEC	TEH			22	HOT	600UL
56	22	0.40	90	P 2	TWD	19	VH3	-0.91	TEC	TEH			25	HOT	600UL
56	28	0.48	101	P 2	TWD	18	VH3	-0.92	TEC	TEH			27	HOT	600UL
56	30	0.37	114	P 2	TWD	14	VH3	-0.92	TEC	TEH			27	HOT	600UL
56	34	0.32	73	P 2	TWD	15	VH3	-0.86	TEC	TEH			30	HOT	600UL
		0.22	20	P 2	TWD	11	VH3	+0.76	TEC	TEH			30	HOT	600UL
		0.31	51	P 2	TWD	15	VC3	+0.82	TEC	TEH			30	HOT	600UL
56	38	0.27	20	P 1	SCI		TSH	-0.14	TSH	TSH	0.00	17.80	227	HOT	580PP
56	64	0.32	102	P 2	TWD	16	VH3	-0.82	TEH	TEC			38	COLD	600UL
56	82	1.08	88	P 2	TWD	34	VH3	-1.01	TEC	TEH			12	HOT	600UL
		0.62	98	P 2	TWD	25	VH3	+0.96	TEC	TEH			12	HOT	600UL
		0.36	83	P 5	TWD	25	VH3	+0.85	VH3	VH3			151	COLD	560P2
		0.44	85	P 5	TWD	30	VH3	-0.92	VH3	VH3			151	COLD	560P2
56	84	0.58	118	P 3	TWD	22	DBH	+1.57	STH	TEC			66	COLD	600UL
		0.58	146	P 3	TWD	22	DBC	-1.80	STH	TEC			66	COLD	600UL
		0.52	85	P 5	TWD	33	DBH	+1.82	DBH	DBH			151	COLD	560P2
		0.83	77	P 5	TWD	43	DBC	-1.62	DBC	DBC			151	COLD	560P2
56	92	0.34	144	P 3	TWD	16	DBC	+1.91	TEC	TEH			12	HOT	600UL
		0.21	77	P 3	TWD	10	DBC	-1.56	TEC	TEH		AAS	12	HOT	600UL
		0.44	94	P 5	TWD	28	DBC	+1.54	DBC	DBC			152	COLD	560P2
		0.28	98	P 5	TWD	20	DBC	-1.64	DBC	DBC			152	COLD	560P2
56	94	0.67	87	P 5	TWD	37	DBH	-1.85	DBH	DBH			152	COLD	560P2
		0.66	76	P 3	TWD	25	DBH	-1.75	TEC	TEH			15	HOT	600UL
56	104	0.24	166	P 3	TWD	13	DBC	-0.96	TEH	TEC			8	COLD	600UL
		0.10	142	P 3	TWD	6	DBH	-0.15	TEH	TEC			8	COLD	600UL
56	108	0.28	34	P 2	TWD	14	VSM	+0.81	TEH	TEC			8	COLD	600UL
56	146	0.52	76	P 2	TWD	22	VH3	-0.90	TEC	TEH			23	HOT	600UL
56	148	0.35	123	P 2	TWD	17	VH3	-1.14	TEC	TEH			29	HOT	600UL
56	152	0.27	49	P 3	TWD	14	DBH	+0.58	TEC	TEH			28	HOT	600UL
56	154	0.28	66	P 2	TWD	15	03H	+0.82	TEC	TEH			28	HOT	600UL
56	158	0.41	41	P 2	TWD	16	VH3	-0.71	TEH	TEC			61	COLD	600UL
56	162	0.42	72	P 2	TWD	20	VH3	-0.96	TEC	TEH			36	HOT	600UL
56	164	0.31	84	P 2	TWD	15	VH3	-0.79	TEC	TEH			37	HOT	600UL
57	15	0.35	103	P 2	TWD	19	VH3	-0.90	TEC	TEH			17	HOT	600UL
57	79	0.58	86	P 3	TWD	22	DBC	-1.94	TEC	TEH			11	HOT	600UL
		0.64	78	P 5	TWD	37	DBC	-1.61	DBC	DBC			151	COLD	560P2

MAI, MCI, MMI, MVI, SAI, SCI, SVI, 0-100%

QUERY: rpc_icodes_and_0-100%twd.qry

ROW	LINE	VOLTS	DEG	CHN	IND	%TW	LOCATION		EXT	EXT	UTIL 1	UTIL 2	CAL #	LEG	PROBE
57	81	0.54	122	P 3	TWD	21	DBC	-1.87	STH	TEC			66	COLD	600UL
		0.51	83	P 5	TWD	33	DBC	-2.03	DBC	DBC			151	COLD	560P2
57	83	1.10	78	P 3	TWD	33	DBC	-1.89	TEC	TEH			11	HOT	600UL
		0.96	78	P 5	TWD	47	DBC	-1.61	DBC	DBC			151	COLD	560P2
57	103	0.63	18	P 1	MCI		TSH	-0.10	TSH	TSH	0.30	18.20	233	HOT	580PP
57	159	0.45	77	P 2	TWD	18	VH3	+0.83	TEH	TEC			61	COLD	600UL
58	16	0.45	56	P 2	TWD	18	VH3	-0.94	TEC	TEH			18	HOT	600UL
58	24	0.51	93	P 2	TWD	20	VH3	-0.89	TEC	TEH			22	HOT	600UL
58	80	0.22	99	P 2	TWD	11	VC3	+0.83	TEC	TEH			11	HOT	600UL
		0.15	152	P 2	TWD	8	VC3	-0.85	TEC	TEH			11	HOT	600UL
		0.20	60	P 2	TWD	10	VH3	+0.91	TEC	TEH			11	HOT	600UL
58	82	0.42	135	P 3	TWD	18	DBH	+1.47	TEC	TEH			11	HOT	600UL
		0.38	90	P 5	TWD	27	DBH	+1.71	DBH	DBH			151	COLD	560P2
58	86	0.68	119	P 3	TWD	25	DBC	+1.29	TEC	TEH			11	HOT	600UL
		0.60	83	P 5	TWD	36	DBC	+1.63	DBC	DBC			151	COLD	560P2
58	90	0.53	114	P 3	TWD	22	DBC	+1.82	TEC	TEH			12	HOT	600UL
		1.08	94	P 3	TWD	33	DBH	-2.15	TEC	TEH			12	HOT	600UL
		0.79	83	P 5	TWD	40	DBH	-1.85	DBH	DBH	APN		152	COLD	560P2
		0.39	88	P 5	TWD	26	DBC	+1.91	DBC	DBC			152	COLD	560P2
58	92	0.25	94	P 5	TWD	18	DBH	+1.98	DBH	DBH			152	COLD	560P2
		0.28	73	P 3	TWD	13	DBH	+1.12	TEC	TEH			11	HOT	600UL
58	94	0.33	90	P 5	TWD	22	DBC	-1.70	DBC	DBC			152	COLD	560P2
		0.35	41	P 3	TWD	16	DBC	-1.67	TEC	TEH		AAS	16	HOT	600UL
58	96	0.28	88	P 5	TWD	20	DBH	-1.69	DBH	DBH			152	COLD	560P2
		0.26	50	P 3	TWD	12	DBH	-2.09	TEC	TEH			15	HOT	600UL
58	116	0.27	95	P 2	TWD	12	08C	-0.19	TEH	TEC			6	COLD	600UL
		0.18	120	2	SAI		08C	-0.15	08C	08C			136	COLD	580PP
58	146	0.51	46	P 2	TWD	21	08H	-0.95	TEC	TEH			24	HOT	600UL
		0.45	70	P 2	TWD	20	VH3	-0.95	TEC	TEH			24	HOT	600UL
58	154	0.36	131	P 2	TWD	17	VH3	-0.93	TEC	TEH			29	HOT	600UL
59	23	0.44	61	P 2	TWD	20	VH3	-1.11	TEC	TEH			25	HOT	600UL
59	25	0.43	90	P 2	TWD	20	VH3	-0.93	TEC	TEH			25	HOT	600UL
59	77	0.37	44	P 2	TWD	16	04H	+0.91	TEC	TEH			11	HOT	600UL
59	95	0.45	84	P 5	TWD	28	DBH	-1.83	DBH	DBH			152	COLD	560P2
		0.19	67	P 3	TWD	9	DBC	+0.85	TEC	TEH			15	HOT	600UL
		0.34	128	P 3	TWD	15	DBH	-2.04	TEC	TEH			15	HOT	600UL
59	143	0.30	143	P 2	TWD	15	VH3	-0.71	TEC	TEH			24	HOT	600UL
59	147	0.41	73	P 2	TWD	19	VH3	+0.89	TEC	TEH			24	HOT	600UL
		0.35	115	P 2	TWD	17	VH3	-0.91	TEC	TEH			24	HOT	600UL
59	153	0.38	122	P 2	TWD	18	VH3	+0.92	TEC	TEH			29	HOT	600UL
59	157	0.24	132	P 2	TWD	12	VH3	+1.01	TEC	TEH			33	HOT	600UL
		0.24	110	P 2	TWD	12	VH3	-0.93	TEC	TEH			33	HOT	600UL
59	159	0.39	33	P 2	TWD	18	VH3	-1.20	TEC	TEH			33	HOT	600UL
		0.32	51	P 2	TWD	15	VH3	+0.40	TEC	TEH			33	HOT	600UL
60	24	0.37	48	P 2	TWD	18	VH3	-0.91	TEC	TEH			25	HOT	600UL
60	30	0.48	65	P 2	TWD	18	VH3	-1.03	TEC	TEH			27	HOT	600UL
60	88	0.55	85	P 5	TWD	32	DBH	+1.78	DBH	DBH			152	COLD	560P2
		0.55	143	P 3	TWD	21	DBH	+2.25	TEC	TEH			11	HOT	600UL

MAI, MCI, MMI, MVI, SAI, SCI, SVI, 0-100%

QUERY: rpc_icodes_and_0-100%twd.qry

ROW	LINE	VOLTS	DEG	CHN	IND	%TW	LOCATION		EXT	EXT	UTIL 1	UTIL 2	CAL #	LEG	PROBE
60	94	0.34	83	P 5	TWD	23	DBH	+1.77	DBH	DBH			152	COLD	560P2
		0.55	83	P 5	TWD	33	DBC	-1.79	DBC	DBC			152	COLD	560P2
		0.41	143	P 3	TWD	18	DBC	-1.75	TEC	TEH			15	HOT	600UL
		0.49	160	P 3	TWD	20	DBH	+1.75	TEC	TEH			15	HOT	600UL
60	118	0.28	33	P 3	TWD	12	DBC	+1.50	TEH	TEC			3	COLD	600UL
60	146	0.39	90	P 2	TWD	18	VH3	-1.06	TEC	TEH			23	HOT	600UL
61	19	0.32	92	P 2	TWD	14	VH3	+0.87	TEC	TEH			22	HOT	600UL
61	35	0.24	136	P 2	TWD	12	VC3	+0.80	TEC	TEH			30	HOT	600UL
61	89	0.36	77	P 5	TWD	24	DBC	-1.59	DBC	DBC			152	COLD	560P2
		0.34	42	P 3	TWD	15	DBC	-1.67	TEC	TEH			11	HOT	600UL
61	103	0.25	13	P 3	TWD	14	DBH	+1.94	TEH	TEC			7	COLD	600UL
61	153	0.39	111	P 3	TWD	19	DBH	+1.35	TEC	TEH			28	HOT	600UL
62	18	0.24	98	P 3	TWD	12	DBC	+1.85	TEH	TEC			69	COLD	600UL
62	40	0.36	36	P 3	TWD	15	DBC	+1.87	TEC	TEH			31	HOT	600UL
62	52	0.14	89	2	MAI		01H	+15.15 TO+17.08	01H	01H	0.21		344	HOT	520ET
62	76	0.12	110	2	SAI		TSH	+0.59	TSH	TSH	0.92	18.08	182	HOT	580PP
		0.10	115	2	SAI		02H	+6.19	02H	02H	0.16		182	HOT	580PP
62	84	0.58	79	P 3	TWD	24	DBH	-1.97	TEC	TEH			12	HOT	600UL
		0.56	104	P 3	TWD	23	DBC	-1.82	TEC	TEH			12	HOT	600UL
		0.66	83	P 5	TWD	38	DBH	-1.68	DBH	DBH			151	COLD	560P2
		0.44	83	P 5	TWD	30	DBC	-1.67	DBC	DBC			151	COLD	560P2
62	94	0.66	86	P 5	TWD	36	DBC	+1.86	DBC	DBC			152	COLD	560P2
		0.75	119	P 3	TWD	27	DBC	+1.56	TEC	TEH		AAS	16	HOT	600UL
62	100	0.12	77	P 1	SCI		TSH	+0.07	TSH	TSH	0.00	17.51	189	HOT	580PP
63	21	0.33	123	P 2	TWD	14	VC3	-0.79	TEC	TEH			22	HOT	600UL
63	79	0.68	47	P 3	TWD	25	DBC	-1.77	TEC	TEH			11	HOT	600UL
		0.59	81	P 5	TWD	36	DBC	-1.76	DBC	DBC			151	COLD	560P2
63	83	0.74	120	P 3	TWD	26	DBC	-1.96	TEC	TEH			11	HOT	600UL
		0.82	78	P 5	TWD	43	DBC	-1.78	DBC	DBC			151	COLD	560P2
63	87	0.64	83	P 5	TWD	36	DBH	-1.77	DBH	DBH			152	COLD	560P2
		0.68	133	P 3	TWD	24	DBH	-1.84	STH	TEC			66	COLD	600UL
63	145	0.49	93	P 2	TWD	22	VH3	+0.75	TEC	TEH			23	HOT	600UL
63	159	0.35	90	P 2	TWD	17	VH3	-1.13	TEC	TEH			33	HOT	600UL
		0.29	136	P 2	TWD	14	VH3	+0.82	TEC	TEH			33	HOT	600UL
64	10	0.44	103	P 2	TWD	20	03C	-0.97	TEC	TEH			13	HOT	600UL
		0.46	104	P 5	TWD	27	03C	-0.99	03C	03C			139	COLD	580PP
64	12	0.50	101	P 2	TWD	24	VH3	+0.74	TEC	TEH			17	HOT	600UL
64	16	0.23	156	P 2	TWD	13	VH3	-0.88	TEC	TEH			17	HOT	600UL
64	18	0.49	81	P 2	TWD	19	VH3	+0.73	TEC	TEH			22	HOT	600UL
		0.35	133	P 2	TWD	15	VH3	-0.96	TEC	TEH			22	HOT	600UL
64	20	0.59	143	P 2	TWD	22	VH3	+0.02	TEC	TEH			22	HOT	600UL
64	66	0.12	75	2	SAI		TSH	+1.53	TSH	TSH	0.10	18.02	173	HOT	580PP
64	82	0.53	100	P 3	TWD	22	DBC	+1.89	TEC	TEH			12	HOT	600UL
		0.44	84	P 5	TWD	30	DBC	+1.46	DBC	DBC			151	COLD	560P2
64	84	0.30	66	P 3	TWD	13	DBH	+1.54	TEC	TEH			11	HOT	600UL
		0.29	85	P 5	TWD	22	DBH	+1.89	DBH	DBH			151	COLD	560P2

MAI, MCI, MMI, MVI, SAI, SCI, SVI, 0-100%

QUERY: rpc_icodes_and_0-100%twd.qry

ROW	LINE	VOLTS	DEG	CHN	IND	%TW	LOCATION		EXT	EXT	UTIL 1	UTIL 2	CAL #	LEG	PROBE
64	86	0.31	139	P 3	TWD	13	DBH	-1.81	STH	TEC			66	COLD	600UL
		0.37	84	P 5	TWD	26	DBH	-1.68	VH3	DBH			151	COLD	560P2
64	88	0.13	122	P 1	SCI		TSH	+0.09	TSH	TSH	0.00	18.43	182	HOT	580PP
64	92	0.21	82	P 5	TWD	15	DBH	-1.89	VH3	DBH			152	COLD	560P2
		0.20	99	P 3	TWD	8	DBH	-1.98	STH	TEC			66	COLD	600UL
64	94	0.32	92	P 5	TWD	22	DBC	-1.85	DBC	DBC			152	COLD	560P2
		0.29	77	P 3	TWD	13	DBC	-1.39	TEC	TEH			15	HOT	600UL
65	13	0.37	127	P 2	TWD	20	VH3	-0.88	TEC	TEH			17	HOT	600UL
65	15	0.38	61	P 2	TWD	20	VSM	-0.74	TEC	TEH			17	HOT	600UL
		0.37	132	P 2	TWD	19	VH3	+0.80	TEC	TEH			17	HOT	600UL
		0.37	133	P 2	TWD	19	VH3	-0.84	TEC	TEH			17	HOT	600UL
65	47	0.31	93	2	SAI		04H	+1.06	04H	04H	0.0		265	HOT	580PP
65	89	0.67	85	P 5	TWD	37	DBH	+1.68	DBH	DBH			152	COLD	560P2
		0.80	150	P 3	TWD	27	DBH	+1.78	TEC	TEH			11	HOT	600UL
65	151	0.53	14	2	SAI		TSH	-18.48	TSH	TSH	0.46	19.29	183	HOT	580PP
65	155	0.27	29	P 2	TWD	14	VH3	-0.74	TEC	TEH			28	HOT	600UL
66	80	0.27	76	P 3	TWD	12	DBC	+2.02	TEC	TEH			11	HOT	600UL
		0.25	86	P 5	TWD	19	DBC	+2.07	DBC	DBC			151	COLD	560P2
66	84	0.32	45	P 3	TWD	15	DBH	-2.02	TEC	TEH			12	HOT	600UL
		0.33	73	P 5	TWD	24	DBH	-1.70	DBH	DBH			151	COLD	560P2
66	88	0.38	90	P 5	TWD	25	DBC	+1.80	DBC	DBC			152	COLD	560P2
		0.45	93	P 3	TWD	19	DBC	+1.92	TEC	TEH			11	HOT	600UL
66	94	0.36	78	P 5	TWD	24	DBC	+1.16	DBC	DBC			152	COLD	560P2
		0.21	96	P 5	TWD	15	DBC	-1.85	DBC	DBC			152	COLD	560P2
		0.36	62	P 3	TWD	16	DBC	+2.03	TEC	TEH			15	HOT	600UL
		0.15	81	P 3	TWD	8	DBC	-1.75	TEC	TEH			15	HOT	600UL
66	138	0.33	99	P 2	TWD	16	08C	-0.70	TEC	TEH			20	HOT	600UL
		0.26	106	P 5	TWD	18	08C	-0.91	08C	08C			138	COLD	580PP
66	144	0.75	117	P 2	TWD	27	04C	-0.98	TEC	TEH			24	HOT	600UL
		0.91	73	P 2	TWD	31	06C	-0.98	TEC	TEH			24	HOT	600UL
		0.54	92	P 2	TWD	22	VSM	-0.95	TEC	TEH			24	HOT	600UL
		0.41	71	P 2	TWD	17	VH3	-0.97	TEC	TEH			24	HOT	600UL
		0.31	67	P 2	TWD	15	05C	+0.98	TEC	TEH			24	HOT	600UL
		0.23	91	P 5	TWD	19	VSM	-0.92	VSM	VSM			149	COLD	560P2
		0.20	83	P 5	TWD	18	VH3	-0.89	VH3	VH3			149	COLD	560P2
		0.23	98	P 5	TWD	17	05C	+0.97	05C	05C			138	COLD	580PP
		0.84	76	P 5	TWD	31	04C	-0.90	04C	04C			138	COLD	580PP
		0.96	76	P 5	TWD	34	06C	-0.92	06C	06C			138	COLD	580PP
66	152	0.37	102	P 2	TWD	17	VH3	-1.24	TEC	TEH			29	HOT	600UL
66	156	0.47	120	P 2	TWD	21	VH3	-0.86	TEC	TEH			29	HOT	600UL
67	19	0.14	105	2	SAI		05H	+3.08 TO+5.04	05H	05H	0.24		211	HOT	580PP
		0.12	98	2	SAI		05H	+1.23	05H	05H	0.18		211	HOT	580PP
67	71	0.13	104	2	SAI		TSH	+2.28	TSH	TSH	0.07	17.68	173	HOT	580PP
67	83	0.56	66	P 3	TWD	22	DBC	-1.98	TEC	TEH			11	HOT	600UL
		0.30	59	P 3	TWD	13	DBH	-1.60	TEC	TEH			11	HOT	600UL
		0.54	79	P 5	TWD	34	DBC	-1.87	DBC	DBC			151	COLD	560P2
		0.26	82	P 5	TWD	20	DBH	-1.76	DBH	DBH			151	COLD	560P2
68	12	0.33	127	P 2	TWD	18	VH3	-0.89	TEC	TEH			17	HOT	600UL
68	20	0.40	111	2	SAI		06H	+0.64	06H	06H	0.26		211	HOT	580PP
		0.45	143	P 2	TWD	20	VH3	+0.89	TEC	TEH			25	HOT	600UL
		0.50	132	P 2	TWD	22	VH3	-0.87	TEC	TEH			25	HOT	600UL
68	22	0.21	99	2	SAI		06H	+0.90	06H	06H	0.0		215	HOT	580PP
		0.53	64	P 2	TWD	20	VH3	+0.80	TEC	TEH			22	HOT	600UL

MAI, MCI, MMI, MVI, SAI, SCI, SVI, 0-100%

QUERY: rpc_icodes_and_0-100%twd.qry

ROW	LINE	VOLTS	DEG	CHN	IND	%TW	LOCATION		EXT	EXT	UTIL 1	UTIL 2	CAL #	LEG	PROBE
		0.65	65	P 2	TWD	23	VH3	-0.78	TEC	TEH			22	HOT	600UL
		0.50	59	P 2	TWD	19	06H	+0.90	TEC	TEH			22	HOT	600UL
68	78	0.18	80	P 2	TWD	9	VC3	+0.77	TEC	TEH			11	HOT	600UL
68	84	0.13	99	2	SAI		TSH	+2.10	TSH	TSH	0.14	18.37	252	HOT	580PP
		0.22	81	P 2	TWD	11	VSM	-0.87	TEC	TEH			11	HOT	600UL
68	90	0.66	77	P 5	TWD	36	DBC	-1.74	DBC	DBC			152	COLD	560P2
		0.30	89	P 5	TWD	21	DBH	-1.58	DBH	DBH			152	COLD	560P2
		0.28	71	P 3	TWD	13	DBH	-0.59	TEC	TEH			11	HOT	600UL
		0.55	98	P 3	TWD	22	DBC	-1.97	TEC	TEH			11	HOT	600UL
68	128	0.31	45	P 2	TWD	13	VH3	-0.79	TEH	TEC			2	COLD	600UL
68	146	0.31	136	P 2	TWD	15	VSM	+0.61	TEC	TEH			23	HOT	600UL
69	13	0.36	135	P 2	TWD	19	VH3	+0.80	TEC	TEH			17	HOT	600UL
69	15	0.50	150	P 2	TWD	24	VH3	+0.86	TEC	TEH			17	HOT	600UL
		0.41	145	P 2	TWD	21	VH3	-0.80	TEC	TEH			17	HOT	600UL
69	19	0.45	109	P 2	TWD	18	VH3	-0.73	TEC	TEH			22	HOT	600UL
69	163	0.30	128	P 2	TWD	13	02C	+0.91	TEC	TEH			37	HOT	600UL
		0.29	92	P 5	TWD	20	02C	+0.92	02C	02C			138	COLD	580PP
70	14	0.47	149	P 2	TWD	23	VH3	-0.78	TEC	TEH			17	HOT	600UL
70	24	0.24	29	P 3	TWD	11	DBC	-1.11	TEC	TEH			22	HOT	600UL
		0.29	54	P 3	TWD	13	DBC	+1.46	TEC	TEH			22	HOT	600UL
		0.15	80	P 5	TWD	11	DBC	-1.31	DBC	DBC			157	COLD	560P2
		0.19	67	P 5	TWD	14	DBC	+1.51	DBC	DBC			157	COLD	560P2
70	38	0.35	97	P 2	TWD	17	VC3	+0.69	TEC	TEH			30	HOT	600UL
70	52	0.38	121	P 3	TWD	14	DBC	+1.75	TEH	TEC			43	COLD	600UL
		0.18	98	P 5	TWD	14	DBC	+1.67	DBC	DBC			154	COLD	560P2
70	90	0.28	153	P 3	TWD	14	DBH	-2.00	TEC	TEH			12	HOT	600UL
		0.23	99	P 5	TWD	17	DBH	-1.94	DBH	DBH			152	COLD	560P2
70	94	0.26	94	P 5	TWD	18	DBC	-1.90	DBC	DBC			152	COLD	560P2
		0.31	81	P 3	TWD	13	DBC	-1.85	TEC	TEH			15	HOT	600UL
70	112	0.49	132	P 2	TWD	19	03C	-0.06	TEH	TEC			6	COLD	600UL
70	144	0.42	87	P 2	TWD	18	VC3	-0.85	TEC	TEH			24	HOT	600UL
		0.32	24	P 2	TWD	13	VSM	-0.93	TEC	TEH			24	HOT	600UL
		0.14	87	P 5	TWD	13	VSM	-0.85	VSM	VSM			149	COLD	560P2
		0.35	98	P 5	TWD	17	VC3	-0.77	VC3	VC3			165	COLD	560P2
70	152	0.28	112	P 2	TWD	14	VH3	-0.97	TEC	TEH			29	HOT	600UL
71	71	2.77	34	2	SAI		TSH	-11.36	TSH	TSH	3.66	17.32	173	HOT	580PP
71	79	0.45	83	P 3	TWD	19	DBC	-1.76	TEC	TEH			11	HOT	600UL
		0.42	84	P 5	TWD	28	DBC	-1.84	DBC	DBC			151	COLD	560P2
71	91	0.31	88	P 5	TWD	21	DBC	-1.40	DBC	DBC			152	COLD	560P2
		0.31	151	P 3	TWD	14	DBC	-1.59	TEC	TEH			11	HOT	600UL
71	93	0.19	95	P 5	TWD	14	DBC	-1.97	DBC	DBC			152	COLD	560P2
		0.22	127	P 3	TWD	11	DBC	-1.91	TEC	TEH			16	HOT	600UL
71	103	0.32	73	P 3	TWD	16	DBH	-0.27	TEH	TEC			7	COLD	600UL
71	113	0.21	88	2	SAI		02H	-16.98	02H	02H	0.18		225	HOT	580PP
71	143	0.34	115	P 2	TWD	14	VSM	+0.50	TEC	TEH			24	HOT	600UL
		0.40	119	P 2	TWD	17	VH3	-0.91	TEC	TEH			24	HOT	600UL
		0.23	82	P 2	TWD	12	04C	-0.20	TEC	TEH			24	HOT	600UL
		0.27	153	P 2	TWD	11	VC3	-0.83	TEC	TEH		AAS	24	HOT	600UL
		0.25	84	P 5	TWD	21	VSM	+0.46	VSM	VSM			149	COLD	560P2
		0.25	95	P 5	TWD	20	VH3	-0.92	VH3	VH3			149	COLD	560P2
		0.16	91	P 5	TWD	15	VC3	-0.88	VC3	VC3			149	COLD	560P2

MAI, MCI, MMI, MVI, SAI, SCI, SVI, 0-100%

QUERY: rpc_icodes_and_0-100%twd.qry

ROW	LINE	VOLTS	DEG	CHN	IND	%TW	LOCATION		EXT	EXT	UTIL 1	UTIL 2	CAL #	LEG	PROBE
		0.18	117	P 5	TWD	14	04C	-0.11	04C	04C			138	COLD	580PP
71	147	0.44	97	P 2	TWD	20	VC3	-1.09	TEC	TEH			29	HOT	600UL
		0.69	103	P 2	TWD	27	VH3	-0.85	TEC	TEH			29	HOT	600UL
		0.28	91	P 5	TWD	23	VC3	-0.97	VC3	VC3			149	COLD	560P2
		0.31	88	P 5	TWD	24	VH3	-0.93	VH3	VH3			149	COLD	560P2
71	155	0.47	58	P 2	TWD	21	VH3	+0.58	TEC	TEH			29	HOT	600UL
		0.39	72	P 2	TWD	18	VH3	-0.78	TEC	TEH			29	HOT	600UL
71	157	0.38	84	P 2	TWD	18	VH3	+0.84	TEC	TEH			33	HOT	600UL
71	161	0.32	138	P 2	TWD	14	VH3	-0.78	TEC	TEH			37	HOT	600UL
71	163	0.48	98	P 2	TWD	22	VH3	-0.85	TEC	TEH			36	HOT	600UL
72	16	0.37	91	P 2	TWD	20	VH3	-0.79	TEC	TEH			17	HOT	600UL
72	26	0.52	113	P 2	TWD	19	VC3	+0.80	TEC	TEH			27	HOT	600UL
		0.31	86	P 5	TWD	21	VC3	+0.72	VC3	VC3			157	COLD	560P2
72	28	0.23	152	P 3	TWD	10	DBC	+0.47	TEC	TEH			27	HOT	600UL
72	36	0.48	40	P 3	TWD	19	DBC	+2.01	TEC	TEH			31	HOT	600UL
		0.21	91	P 5	TWD	15	DBC	+1.90	DBC	DBC			157	COLD	560P2
72	38	0.34	20	P 3	TWD	14	DBC	+1.72	TEC	TEH			31	HOT	600UL
		0.25	97	P 5	TWD	17	DBC	+1.18	DBC	DBC			157	COLD	560P2
72	78	0.22	140	P 2	TWD	11	VC3	+0.94	TEC	TEH			11	HOT	600UL
		0.28	104	P 2	TWD	13	VH3	+0.84	TEC	TEH			11	HOT	600UL
		0.54	85	P 2	TWD	22	VH3	-0.84	TEC	TEH			11	HOT	600UL
		0.24	83	P 5	TWD	19	VH3	-0.88	VH3	VH3			151	COLD	560P2
		0.18	85	P 5	TWD	15	VH3	+0.81	VH3	VH3			151	COLD	560P2
		0.16	77	P 5	TWD	13	VC3	+0.82	VC3	VC3			151	COLD	560P2
72	80	0.39	147	P 2	TWD	17	VC3	+0.87	TEC	TEH			11	HOT	600UL
		0.23	96	P 5	TWD	18	VC3	+0.79	VC3	VC3			151	COLD	560P2
72	84	0.27	91	P 2	TWD	12	VH3	-0.85	TEC	TEH			11	HOT	600UL
		0.34	107	P 3	TWD	15	DBC	-1.82	TEC	TEH			11	HOT	600UL
		0.20	70	P 5	TWD	16	VH3	-0.89	VH3	VH3			151	COLD	560P2
		0.37	89	P 5	TWD	26	DBC	-2.16	DBC	DBC			151	COLD	560P2
72	86	0.26	33	P 2	TWD	12	VSM	-0.91	TEC	TEH			11	HOT	600UL
		0.39	97	P 3	TWD	16	DBH	+0.46	TEC	TEH			11	HOT	600UL
72	90	0.28	82	P 5	TWD	20	DBC	-1.59	DBC	DBC			152	COLD	560P2
		0.34	101	P 3	TWD	15	DBC	-1.65	TEC	TEH			11	HOT	600UL
72	114	0.27	75	P 2	TWD	12	VC3	+0.89	TEH	TEC			5	COLD	600UL
		0.38	152	P 3	TWD	14	DBC	+1.92	TEH	TEC			5	COLD	600UL
		0.16	92	P 5	TWD	13	VC3	+0.78	VC3	VC3			146	COLD	560P2
72	126	0.46	85	P 2	TWD	19	VSM	-0.80	TEH	TEC			3	COLD	600UL
		0.38	116	P 2	TWD	17	VH3	-0.16	TEH	TEC			3	COLD	600UL
		0.23	87	P 5	TWD	16	VSM	-0.59	VSM	VSM			146	COLD	560P2
		0.33	82	P 5	TWD	23	VH3	-0.11	VH3	VH3			146	COLD	560P2
73	13	0.14	88	P 5	TWD	14	VH3	+0.84	VSM	VH3			159	COLD	560P2
		0.32	51	P 2	TWD	17	VH3	+0.84	TEC	TEH			17	HOT	600UL
73	57	0.42	65	P 2	TWD	15	01H	+0.97	TEH	TEC			42	COLD	600UL
73	103	0.36	96	P 2	TWD	17	02H	-1.24	TEH	TEC			8	COLD	600UL
74	18	0.33	148	P 3	TWD	15	DBC	+1.78	TEH	TEC			69	COLD	600UL
		0.22	91	P 5	TWD	15	DBC	+1.76	DBC	DBC			156	COLD	560P2
74	26	0.28	83	P 2	TWD	14	VC3	-0.87	TEC	TEH			26	HOT	600UL
74	44	0.51	110	P 2	TWD	19	VSM	-0.15	TEC	TEH			35	HOT	600UL
		0.62	144	P 2	TWD	23	VH3	-0.81	TEC	TEH			35	HOT	600UL
		0.19	98	P 5	TWD	14	VSM	+0.03	VSM	VSM			177	COLD	560P2
		0.32	89	P 5	TWD	22	VH3	-0.73	VH3	VH3			156	COLD	560P2

MAI, MCI, MMI, MVI, SAI, SCI, SVI, 0-100%

QUERY: rpc_icodes_and_0-100%twd.qry

ROW	LINE	VOLTS	DEG	CHN	IND	%TW	LOCATION		EXT	EXT	UTIL 1	UTIL 2	CAL #	LEG	PROBE
74	54	0.10	134	P 3	TWD	4	DBH	-1.91	TEH	TEC			44	COLD	600UL
74	56	0.40	139	P 3	TWD	16	DBH	+1.06	TEH	TEC			42	COLD	600UL
		0.26	82	P 5	TWD	19	DBH	+1.13	DBH	DBH			153	COLD	560P2
74	78	0.16	112	2	SAI		TSH	+3.67	TSH	TSH	0.00	17.97	182	HOT	580PP
74	90	0.39	98	P 3	TWD	18	DBC	-1.75	TEC	TEH			12	HOT	600UL
		0.31	90	P 5	TWD	21	DBC	-1.47	DBC	DBC			152	COLD	560P2
74	94	0.22	83	P 5	TWD	16	DBH	-1.66	DBH	DBH			152	COLD	560P2
		0.48	34	P 3	TWD	20	DBH	+1.60	TEC	TEH			16	HOT	600UL
		0.20	39	P 3	TWD	10	DBH	-1.90	TEC	TEH			16	HOT	600UL
74	96	0.40	62	P 2	TWD	18	02H	-1.23	TEC	TEH			16	HOT	600UL
74	132	0.29	89	P 2	TWD	14	VC3	-1.06	TEC	TEH			20	HOT	600UL
		0.17	78	P 5	TWD	13	VC3	-0.99	VC3	VC3			147	COLD	560P2
74	140	0.32	15	P 3	TWD	16	DBH	+2.25	TEC	TEH			24	HOT	600UL
74	146	0.32	84	P 2	TWD	15	VH3	+0.81	TEC	TEH			24	HOT	600UL
74	148	0.18	22	P 2	TWD	10	VSM	-0.86	TEC	TEH			28	HOT	600UL
		0.41	145	P 2	TWD	21	VH3	-0.96	TEC	TEH			28	HOT	600UL
		0.31	78	P 5	TWD	24	VH3	-0.91	VH3	VH3			149	COLD	560P2
		0.21	92	P 5	TWD	18	VSM	-0.82	VSM	VSM			149	COLD	560P2
74	156	0.49	53	P 2	TWD	22	VC3	-0.84	TEC	TEH			29	HOT	600UL
		0.47	86	P 2	TWD	21	VSM	-0.82	TEC	TEH			29	HOT	600UL
		0.55	97	P 2	TWD	23	VH3	-0.84	TEC	TEH			29	HOT	600UL
		0.31	116	P 5	TWD	15	VH3	-0.84	VH3	VH3			165	COLD	560P2
		0.25	87	P 5	TWD	20	VSM	-0.84	VSM	VSM			150	COLD	560P2
		0.20	82	P 5	TWD	16	VC3	-0.76	VC3	VC3			150	COLD	560P2
75	17	0.18	123	2	SAI		06H	+10.00	06H	06H	0.13		211	HOT	580PP
		0.25	111	2	SAI		06H	-0.23	06H	06H	0.38		211	HOT	580PP
75	51	0.27	136	P 3	TWD	12	DBH	-1.93	TEH	TEC			44	COLD	600UL
		0.13	93	P 5	TWD	11	DBH	-1.80	DBH	DBH			153	COLD	560P2
75	73	0.20	108	2	SAI		TSH	+0.26	TSH	TSH	0.00	21.38	308	HOT	580PP
75	79	0.85	103	P 3	TWD	29	DBC	-1.68	TEC	TEH			11	HOT	600UL
		0.61	80	P 5	TWD	37	DBC	-1.83	DBC	DBC			151	COLD	560P2
75	83	0.34	74	P 3	TWD	15	DBC	-1.97	TEC	TEH			11	HOT	600UL
		0.35	82	P 5	TWD	25	DBC	-1.65	DBC	DBC			151	COLD	560P2
75	87	0.40	120	P 3	TWD	17	DBC	-2.02	TEC	TEH			11	HOT	600UL
		0.40	90	P 5	TWD	28	DBC	-1.94	DBC	DBC			151	COLD	560P2
75	97	0.19	95	P 5	TWD	14	VC3	+0.90	VC3	VC3			152	COLD	560P2
		0.17	110	P 5	TWD	13	VC3	-0.89	VC3	VC3			152	COLD	560P2
		0.24	48	P 2	TWD	12	VC3	-0.90	TEC	TEH			16	HOT	600UL
		0.27	113	P 2	TWD	14	VC3	+0.83	TEC	TEH		AAS	16	HOT	600UL
75	103	0.15	85	P 5	TWD	12	VC3	+0.69	VC3	VC3			146	COLD	560P2
		0.17	95	P 2	TWD	10	VC3	+0.95	TEH	TEC			7	COLD	600UL
75	105	0.40	117	P 2	TWD	20	VH3	-0.72	STH	TEC			11	COLD	600UL
		0.39	126	P 2	TWD	19	VSM	-0.21	STH	TEC			11	COLD	600UL
		0.27	93	P 5	TWD	19	VH3	-0.89	VH3	VH3	AAS		146	COLD	560P2
		0.32	102	P 5	TWD	22	VSM	-0.25	VSM	VSM			146	COLD	560P2
75	111	1.03	110	P 2	TWD	32	VC3	+0.93	TEH	TEC			5	COLD	600UL
		0.50	129	P 2	TWD	20	VH3	+0.15	TEH	TEC			5	COLD	600UL
		0.33	20	P 2	TWD	15	VSM	+0.81	TEH	TEC			5	COLD	600UL
		0.28	92	P 5	TWD	20	VH3	-0.11	VH3	VH3			146	COLD	560P2
		0.20	96	P 5	TWD	15	VSM	+0.77	VSM	VSM			146	COLD	560P2
		0.43	85	P 5	TWD	28	VC3	+0.75	VC3	VC3			146	COLD	560P2
75	119	0.56	127	P 3	TWD	20	DBC	+1.63	TEH	TEC			3	COLD	600UL
75	125	0.25	85	P 2	TWD	12	07H	-0.85	TEH	TEC			3	COLD	600UL

MAI, MCI, MMI, MVI, SAI, SCI, SVI, 0-100%

QUERY: rpc_icodes_and_0-100%twd.qry

ROW	LINE	VOLTS	DEG	CHN	IND	%TW	LOCATION		EXT	EXT	UTIL 1	UTIL 2	CAL #	LEG	PROBE
75	139	2.48	22	2	MAI		TSH	-13.75	TSH	TSH	4.08	19.93	168	HOT	580PP
76	22	0.34	55	P 2	TWD	14	VSM	-0.78	TEC	TEH			22	HOT	600UL
76	42	0.20	132	P 3	TWD	11	DBC	-1.74	TEC	TEH			34	HOT	600UL
76	66	0.39	57	P 2	TWD	14	01H	-1.21	TEH	TEC			40	COLD	600UL
76	78	0.50	109	P 2	TWD	21	VC3	+0.90	TEC	TEH			11	HOT	600UL
		0.25	131	P 2	TWD	12	VC3	-0.88	TEC	TEH			11	HOT	600UL
		0.27	87	P 2	TWD	13	VH3	+0.84	TEC	TEH			11	HOT	600UL
		0.23	92	P 5	TWD	18	VC3	+0.82	VC3	VC3			151	COLD	560P2
		0.17	92	P 5	TWD	14	VC3	-0.93	VC3	VC3			151	COLD	560P2
		0.19	95	P 5	TWD	15	VH3	+0.85	VH3	VH3			151	COLD	560P2
76	90	0.36	74	P 5	TWD	24	DBC	-1.70	DBC	DBC			152	COLD	560P2
		0.32	126	P 3	TWD	14	DBC	-1.96	TEC	TEH			11	HOT	600UL
76	94	0.12	67	P 5	TWD	9	DBC	+1.77	DBC	VC3			152	COLD	560P2
76	114	0.42	56	P 2	TWD	18	VH3	-0.75	TEH	TEC			5	COLD	600UL
		0.15	88	P 5	TWD	12	VH3	-0.90	VH3	VH3			146	COLD	560P2
76	142	0.25	120	P 2	TWD	13	08C	-0.41	TEC	TEH			23	HOT	600UL
77	27	0.29	111	P 3	TWD	12	DBC	-1.60	TEC	TEH			27	HOT	600UL
		0.21	80	P 5	TWD	14	DBC	-1.58	DBC	DBC			156	COLD	560P2
77	43	0.27	140	P 2	TWD	12	VH3	+0.84	TEC	TEH			35	HOT	600UL
		0.25	84	P 5	TWD	16	VH3	+0.70	VH3	VH3			156	COLD	560P2
77	113	0.23	83	P 2	TWD	10	VH3	-0.95	TEH	TEC		APN	6	COLD	600UL
		0.16	89	P 5	TWD	13	VH3	-1.07	VH3	VH3			146	COLD	560P2
77	115	0.31	23	P 1	SCI		TSH	-6.40	TSH	TSH	0.50	18.03	225	HOT	580PP
77	137	0.53	83	P 2	TWD	25	VSM	-0.94	TEC	TEH			19	HOT	600UL
		0.37	82	P 5	TWD	25	VSM	-0.91	VSM	VSM			147	COLD	560P2
77	139	0.68	128	P 2	TWD	27	VC3	+0.87	TEC	TEH			23	HOT	600UL
		0.52	81	P 2	TWD	22	VSM	-0.96	TEC	TEH			23	HOT	600UL
		0.32	119	P 2	TWD	16	VH3	-0.93	TEC	TEH			23	HOT	600UL
		0.19	91	P 5	TWD	15	VSM	-0.90	VSM	VSM			147	COLD	560P2
		0.22	103	P 5	TWD	17	VH3	-0.95	VH3	VH3			147	COLD	560P2
		0.38	93	P 5	TWD	25	VC3	+0.90	VC3	VC3			147	COLD	560P2
		0.14	105	P 5	TWD	11	VC3	+0.16	VC3	VC3			147	COLD	560P2
		0.13	102	P 5	TWD	10	VC3	-0.83	VC3	VC3			147	COLD	560P2
78	26	0.31	96	P 2	TWD	14	07C	-0.18	TEC	TEH			26	HOT	600UL
78	28	0.25	86	P 5	TWD	16	DBC	-1.68	DBC	DBC			156	COLD	560P2
		0.16	133	P 3	TWD	8	DBC	-1.53	TEC	TEH			26	HOT	600UL
78	44	0.48	132	P 2	TWD	19	VSM	-0.82	TEC	TEH			35	HOT	600UL
		0.23	87	P 5	TWD	15	VSM	-0.59	VSM	VSM			156	COLD	560P2
78	64	0.26	14	2	SAI		TSH	-10.99	TSH	TSH	0.00	19.08	170	HOT	580PP
		1.36	24	2	SAI		TSH	-10.68	TSH	TSH	1.05	19.08	170	HOT	580PP
		0.96	26	2	SAI		TSH	-10.51	TSH	TSH	1.34	19.08	170	HOT	580PP
		0.40	13	2	SAI		TSH	-9.76	TSH	TSH	0.18	19.08	170	HOT	580PP
		0.89	21	2	SAI		TSH	-9.35	TSH	TSH	0.59	19.08	170	HOT	580PP
		1.85	27	2	SAI		TSH	-9.18	TSH	TSH	1.82	19.08	170	HOT	580PP
78	66	0.12	120	2	SAI		02H	-1.87	02H	02H	0.13		278	HOT	580PP
78	74	0.62	25	P 1	SCI		TSH	-0.09	TSH	TSH	0.40	17.30	178	HOT	580PP
78	130	0.21	78	P 5	TWD	16	VSM	-1.19	VSM	VSM			147	COLD	560P2
		0.32	124	P 2	TWD	14	VSM	-0.95	TEH	TEC			57	COLD	600UL
78	136	0.27	142	P 2	TWD	12	VC3	-0.76	STH	TEC			63	COLD	600UL
		0.19	91	P 5	TWD	15	VC3	-0.73	VC3	VC3			147	COLD	560P2
78	150	0.50	43	P 2	TWD	22	VH3	-0.74	TEC	TEH			29	HOT	600UL
		0.13	67	P 5	TWD	12	VH3	-0.78	VH3	VH3			149	COLD	560P2

MAI, MCI, MMI, MVI, SAI, SCI, SVI, 0-100%

QUERY: rpc_icodes_and_0-100%twd.qry

ROW	LINE	VOLTS	DEG	CHN	IND	%TW	LOCATION		EXT	EXT	UTIL 1	UTIL 2	CAL #	LEG	PROBE
78	160	0.28	137	P 3	TWD	14	DBC	-1.63	TEC	TEH			33	HOT	600UL
		0.13	99	P 5	TWD	11	DBC	-1.57	DBC	DBC			150	COLD	560P2
79	43	0.27	89	P 2	TWD	13	VH3	-0.61	TEC	TEH			34	HOT	600UL
		0.24	90	P 5	TWD	16	VH3	-0.76	VH3	VH3			156	COLD	560P2
79	79	0.24	126	P 2	TWD	12	VH3	-0.91	TEC	TEH			11	HOT	600UL
		0.17	66	P 5	TWD	14	VH3	-0.88	VH3	VH3			151	COLD	560P2
79	99	0.51	169	P 3	TWD	21	DBH	+1.03	TEC	TEH			15	HOT	600UL
80	98	0.52	149	P 3	TWD	21	DBH	+1.72	TEC	TEH			15	HOT	600UL
80	106	0.10	89	P 5	TWD	8	VH3	+0.75	VH3	VH3			146	COLD	560P2
		0.24	33	P 2	TWD	14	VH3	+0.89	TEH	TEC			7	COLD	600UL
80	114	0.36	57	P 2	TWD	16	VC3	+0.85	TEH	TEC			5	COLD	600UL
80	152	0.52	49	P 2	TWD	24	VC3	+0.94	TEC	TEH			28	HOT	600UL
		0.44	29	P 2	TWD	22	VC3	-0.94	TEC	TEH			28	HOT	600UL
		0.30	66	P 2	TWD	16	VSM	+1.00	TEC	TEH			28	HOT	600UL
		0.51	90	P 2	TWD	24	VSM	-0.94	TEC	TEH			28	HOT	600UL
		0.37	87	P 5	TWD	27	VC3	+0.89	VC3	VC3			150	COLD	560P2
		0.22	88	P 5	TWD	18	VC3	-0.71	VC3	VC3			150	COLD	560P2
		0.36	91	P 5	TWD	26	VSM	-0.86	VSM	VSM			150	COLD	560P2
		0.22	98	P 5	TWD	18	VSM	+0.81	VSM	VSM			150	COLD	560P2
81	43	0.76	107	P 5	TWD	30	VSM	-0.84	VSM	VSM			324	HOT	560P2
		0.38	143	P 2	TWD	17	VC3	-0.46	TEC	TEH			42	HOT	600UL
		0.76	126	P 2	TWD	27	VSM	-0.91	TEC	TEH			42	HOT	600UL
		0.35	85	P 5	TWD	25	VC3	-0.81	VC3	VC3			171	COLD	560P2
		0.18	92	P 5	TWD	14	VC3	+0.25	VC3	VC3			171	COLD	560P2
		0.14	101	P 5	TWD	11	VC3	+0.96	VC3	VC3			171	COLD	560P2
81	55	0.28	47	P 2	TWD	12	VH3	-0.83	TEH	TEC			48	COLD	600UL
81	61	0.13	107	2	MAI		01H	+3.20	01H	01H	0.00		292	HOT	580PP
81	75	0.27	33	P 2	TWD	15	VC3	+0.87	TEH	TEC			53	COLD	600UL
		0.14	112	P 5	TWD	12	VC3	+0.87	VC3	VC3			163	COLD	560P2
81	79	0.81	85	P 2	TWD	26	VH3	-0.89	TEH	TEC			32	COLD	600UL
		0.52	107	P 5	TWD	23	VH3	-0.79	VH3	VH3			322	HOT	560P2
81	105	0.60	77	P 2	TWD	22	VH3	+0.68	TEH	TEC			21	COLD	600UL
		0.27	137	P 2	TWD	12	VSM	+0.85	TEH	TEC			21	COLD	600UL
		0.29	115	P 5	TWD	15	VSM	+0.93	VSM	VSM			166	COLD	560P2
		0.27	83	P 5	TWD	19	VH3	+1.03	VH3	VH3			326	HOT	560P2
81	125	0.55	25	P 1	SCI		TSH	-0.05	TSH	TSH	0.71	17.25	294	HOT	580PP
81	131	1.24	15	P 1	SCI		TSH	-16.67	TSH	TSH	.48	18.10	262	HOT	580PP
81	135	0.40	120	P 2	TWD	18	VH3	+0.88	TEC	TEH			41	HOT	600UL
		0.27	86	P 5	TWD	22	VH3	+0.88	VH3	VH3			323	HOT	560P2
		0.18	96	P 5	TWD	16	VH3	-0.80	VH3	VH3			323	HOT	560P2
81	159	0.22	96	P 5	TWD	15	02H	-0.34	02H	02H			275	HOT	580PP
		0.36	76	P 2	TWD	16	VH3	-0.82	TEC	TEH			51	HOT	600UL
		0.31	88	P 2	TWD	14	02H	-0.33	TEC	TEH	LAR		51	HOT	600UL
82	28	0.28	138	P 2	TWD	12	VH3	-0.71	TEC	TEH			39	HOT	600UL
		0.29	101	P 5	TWD	14	VH3	-0.85	VH3	VH3			324	HOT	560P2
		0.33	102	P 5	TWD	16	VH3	-0.15	VH3	VH3			324	HOT	560P2
82	50	0.13	127	P 5	TWD	10	08H	-0.43	08H	08H			240	HOT	580PP
82	68	0.46	104	P 5	TWD	21	VH3	+0.84	VH3	VH3			324	HOT	560P2
		0.68	100	P 5	TWD	28	VH3	-0.84	VH3	VH3			324	HOT	560P2
		0.76	98	P 2	TWD	27	VH3	-0.85	TEH	TEC			51	COLD	600UL
		0.35	143	P 2	TWD	16	VH3	+0.83	TEH	TEC			51	COLD	600UL
82	70	0.40	56	P 2	TWD	16	01H	+0.86	TEH	TEC			52	COLD	600UL
82	76	0.20	26	P 1	SCI		TSH	+0.00	TSH	TSH	0.0	18.06	284	HOT	580PP

MAI, MCI, MMI, MVI, SAI, SCI, SVI, 0-100%

QUERY: rpc_icodes_and_0-100%twd.qry

ROW	LINE	VOLTS	DEG	CHN	IND	%TW	LOCATION		EXT	EXT	UTIL 1	UTIL 2	CAL #	LEG	PROBE
82	96	0.37	28	P 2	TWD	17	04H	-0.20	TEH	TEC			26	COLD	600UL
82	104	0.35	85	P 2	TWD	15	02H	-1.09	TEH	TEC			21	COLD	600UL
82	108	0.34	70	P 2	TWD	14	02H	-1.20	TEH	TEC			19	COLD	600UL
82	112	0.91	20	2	SAI		TSH	-12.24	TSH	TSH	1.33		300	HOT	580PP
		1.14	16	2	SAI		TSH	-13.10	TSH	TSH	1.19		300	HOT	580PP
		1.41	18	2	SAI		TSH	-13.28	TSH	TSH	1.63		300	HOT	580PP
		1.98	19	2	SAI		TSH	-13.65	TSH	TSH	3.01	18.03	300	HOT	580PP
82	148	0.73	126	P 2	TWD	27	VH3	-0.92	TEC	TEH			50	HOT	600UL
		0.38	88	P 5	TWD	27	VH3	-0.93	VH3	VH3			323	HOT	560P2
83	95	0.20	150	P 1	SCI		TSH	+0.07	TSH	TSH	0.22	18.04	276	HOT	580PP
83	109	0.42	52	P 2	TWD	17	01H	+0.91	TEH	TEC			19	COLD	600UL
		0.37	44	P 2	TWD	15	02H	-1.20	TEH	TEC			19	COLD	600UL
84	88	0.34	88	P 2	TWD	14	VH2	+0.78	TEH	TEC			29	COLD	600UL
84	98	0.27	56	P 2	TWD	14	02H	-1.25	TEH	TEC			26	COLD	600UL
84	100	0.23	96	P 2	TWD	12	VH2	+0.81	TEH	TEC			24	COLD	600UL
84	110	0.58	55	P 2	TWD	23	VH2	-0.90	TEH	TEC			18	COLD	600UL
84	124	0.47	56	P 2	TWD	21	VH2	+0.72	TEH	TEC			14	COLD	600UL
84	132	0.46	109	P 2	TWD	20	VC2	-0.64	TEC	TEH			41	HOT	600UL
85	71	0.44	40	P 2	TWD	17	02H	-1.19	TEH	TEC			52	COLD	600UL
85	99	0.47	51	P 2	TWD	21	02H	-1.24	TEH	TEC			26	COLD	600UL
85	113	1.61	17	2	SAI		TSH	-11.79	TSH	TSH	1.62		300	HOT	580PP
		2.35	18	2	SAI		TSH	-12.78	TSH	TSH	3.23	17.92	300	HOT	580PP
85	145	0.26	150	P 2	TWD	15	VSM	+0.82	TEC	TEH			47	HOT	600UL
86	82	0.40	73	P 2	TWD	17	VH2	+0.80	STH	TEC			63	COLD	600UL
86	130	0.35	88	P 2	TWD	17	VH2	-0.86	TEC	TEH			41	HOT	600UL
87	43	0.38	63	P 2	TWD	17	VH2	+0.63	TEC	TEH			42	HOT	600UL
87	49	0.37	72	P 2	TWD	16	VH2	+0.82	TEH	TEC			45	COLD	600UL
87	71	0.26	98	2	SAI		08H	-0.41	08H	08H	.30		249	HOT	580PP
88	38	0.43	120	P 2	TWD	19	VH2	-1.05	TEC	TEH			42	HOT	600UL
88	40	0.31	50	P 2	TWD	15	VH2	-0.81	TEC	TEH			42	HOT	600UL
88	44	0.48	139	P 2	TWD	21	VH2	-0.82	TEC	TEH			43	HOT	600UL
88	68	0.37	92	P 2	TWD	15	VH2	-0.83	TEH	TEC			52	COLD	600UL
		0.37	63	P 2	TWD	15	01H	+0.94	TEH	TEC			52	COLD	600UL
88	88	0.33	58	P 2	TWD	14	VH2	+0.91	TEH	TEC			29	COLD	600UL
88	138	0.37	125	P 2	TWD	17	VH2	-0.83	TEC	TEH			46	HOT	600UL
88	140	0.43	98	P 2	TWD	19	VH2	+1.02	TEC	TEH			46	HOT	600UL
88	152	0.44	137	P 2	TWD	19	VH2	-0.82	TEC	TEH			51	HOT	600UL
89	85	0.36	55	P 2	TWD	15	VH2	-0.71	TEH	TEC			31	COLD	600UL
		0.28	135	P 1	SCI		TSH	+0.08	TSH	TSH	0.00	18.86	285	HOT	580PP
89	87	0.52	17	2	SAI		TSH	-13.33	TSH	TSH	0.98	18.89	285	HOT	580PP
89	111	3.22	29	2	SAI		TSH	-12.99	TSH	TSH	4.96	17.71	301	HOT	580PP
89	133	0.30	82	P 2	TWD	15	VH2	-0.88	TEC	TEH			41	HOT	600UL

MAI, MCI, MMI, MVI, SAI, SCI, SVI, 0-100%

QUERY: rpc_icodes_and_0-100%twd.qry

ROW	LINE	VOLTS	DEG	CHN	IND	%TW	LOCATION		EXT	EXT	UTIL 1	UTIL 2	CAL #	LEG	PROBE
90	38	0.55	101	P 2	TWD	23	VH2	-0.93	TEC	TEH			43	HOT	600UL
90	40	0.50	95	P 2	TWD	22	VH2	-1.02	TEC	TEH			43	HOT	600UL
90	52	0.51	89	P 2	TWD	20	VH2	-0.79	TEH	TEC			47	COLD	600UL
90	58	0.37	119	P 2	TWD	16	VH2	-0.81	TEH	TEC			47	COLD	600UL
90	106	0.25	96	P 2	TWD	11	VH2	+0.68	TEH	TEC			21	COLD	600UL
90	114	0.37	85	P 2	TWD	17	VH3	-0.59	TEH	TEC			18	COLD	600UL
90	116	0.11	110	2	SAI		02H	+10.21	02H	02H	0.00		300	HOT	580PP
		0.38	129	P 2	TWD	16	VH2	-0.83	TEH	TEC			17	COLD	600UL
90	118	0.38	126	P 2	TWD	16	VH2	-0.81	TEH	TEC			17	COLD	600UL
90	140	0.29	73	P 2	TWD	16	VH2	-0.83	TEC	TEH			47	HOT	600UL
90	144	0.37	20	P 2	TWD	20	VSM	+0.88	TEC	TEH			47	HOT	600UL
90	156	0.35	69	P 2	TWD	15	VH2	-0.81	TEC	TEH			50	HOT	600UL
91	43	0.58	127	P 2	TWD	24	06C	-0.93	TEC	TEH			42	HOT	600UL
		0.45	107	P 5	TWD	26	06C	-0.92	06C	06C			140	COLD	580PP
91	67	0.33	89	P 2	TWD	13	09H	-0.93	TEH	TEC			52	COLD	600UL
91	119	0.35	106	P 2	TWD	15	VH2	-0.66	TEH	TEC			17	COLD	600UL
91	145	0.26	78	P 2	TWD	13	VH2	-1.00	TEC	TEH			46	HOT	600UL
91	151	0.30	34	P 2	TWD	14	VH2	-0.91	TEC	TEH			50	HOT	600UL
92	60	0.46	142	P 2	TWD	19	09H	-1.23	TEH	TEC			49	COLD	600UL
92	96	0.30	48	P 2	TWD	15	VC3	+0.75	TEH	TEC			26	COLD	600UL
93	31	0.09	107	2	SAI		06H	+4.15	06H	06H	0.00		286	HOT	580PP
		0.10	99	2	SAI		06H	+5.78	06H	06H	0.00		286	HOT	580PP
93	33	0.55	130	P 2	TWD	23	VH2	+0.87	TEC	TEH			38	HOT	600UL
94	26	0.45	85	P 2	TWD	18	VH2	+1.04	TEC	TEH			39	HOT	600UL
94	50	0.18	94	P 5	TWD	12	05C	-0.15	05C	05C			136	COLD	580PP
		0.24	114	P 2	TWD	11	05C	-0.14	TEH	TEC			45	COLD	600UL
94	124	0.34	123	P 2	TWD	14	VH2	-0.93	TEH	TEC			56	COLD	600UL
94	146	0.24	106	P 2	TWD	14	VH3	-0.88	TEC	TEH			47	HOT	600UL
		0.14	94	P 5	TWD	13	VH3	-0.81	VH3	VH3			323	HOT	560P2
94	154	0.28	30	P 2	TWD	13	VH2	-1.24	TEC	TEH			50	HOT	600UL
95	29	0.52	152	P 2	TWD	22	VH2	+0.89	TEC	TEH			38	HOT	600UL
95	35	0.57	79	P 2	TWD	23	VH2	+0.97	TEC	TEH			42	HOT	600UL
95	77	2.11	25	2	SAI		TSH	-9.20	TSH	TSH	3.03	18.63	289	HOT	580PP
95	93	1.17	28	P 1	SCI		TSH	-7.33	TSH	TSH	1.81	18.41	280	HOT	580PP
95	97	0.35	91	P 2	TWD	16	VH3	-0.81	TEH	TEC			26	COLD	600UL
95	141	1.23	14	2	SAI		TSH	-12.35	TSH	TSH	.79	18.53	271	HOT	580PP
		0.79	11	2	SAI		TSH	-12.01	TSH	TSH	.54		271	HOT	580PP
96	48	0.43	113	P 2	TWD	21	VH2	-0.86	TEH	TEC			46	COLD	600UL
96	52	0.39	114	P 2	TWD	17	VH2	-0.83	TEH	TEC			47	COLD	600UL
96	74	0.39	129	P 2	TWD	19	VSM	-0.87	TEH	TEC			53	COLD	600UL
96	98	0.28	105	P 2	TWD	14	07H	+1.25	TEH	TEC			26	COLD	600UL

MAI, MCI, MMI, MVI, SAI, SCI, SVI, 0-100%

QUERY: rpc_icodes_and_0-100%twd.qry

ROW	LINE	VOLTS	DEG	CHN	IND	%TW	LOCATION		EXT	EXT	UTIL 1	UTIL 2	CAL #	LEG	PROBE
96	152	0.36	75	P 2	TWD	16	VH2	+0.86	TEC	TEH			51	HOT	600UL
97	37	0.41	103	P 2	TWD	18	VC3	+0.81	TEC	TEH			42	HOT	600UL
		0.30	81	P 5	TWD	21	VC3	+0.81	VC3	VC3			164	COLD	560P2
97	41	0.47	135	P 2	TWD	20	VH2	+0.91	TEC	TEH			42	HOT	600UL
97	107	1.01	18	2	SAI		TSH	-8.96	TSH	TSH	0.92	17.32	305	HOT	580PP
97	123	0.31	113	P 2	TWD	13	VH2	-0.77	TEH	TEC			17	COLD	600UL
98	94	0.35	70	P 2	TWD	14	VH3	+0.81	TEH	TEC			27	COLD	600UL
98	136	0.27	65	P 2	TWD	13	VH2	-0.83	TEC	TEH			46	HOT	600UL
		0.40	55	P 2	TWD	18	VH2	+0.76	TEC	TEH			46	HOT	600UL
98	148	0.42	135	P 2	TWD	18	VH2	+0.98	TEC	TEH			50	HOT	600UL
98	150	0.49	43	P 2	TWD	20	VH2	+0.81	TEC	TEH			50	HOT	600UL
100	36	0.42	150	P 2	TWD	19	06H	-0.53	TEC	TEH			42	HOT	600UL
		0.25	99	2	SAI		06H	-0.45	06H	06H	0.37		286	HOT	580PP
		0.13	100	2	SAI		06H	+1.55	06H	06H	0.20		286	HOT	580PP
		0.08	87	2	SAI		06H	+2.18	06H	06H	0.00		286	HOT	580PP
		0.12	87	2	SAI		06H	+2.92	06H	06H	0.37		286	HOT	580PP
		0.12	98	2	MAI		06H	+3.24	06H	06H	0.19		286	HOT	580PP
		0.12	131	2	SAI		06H	+3.80	06H	06H	0.00		286	HOT	580PP
100	98	0.37	70	P 2	TWD	17	01H	+0.79	TEH	TEC			26	COLD	600UL
100	140	0.58	113	P 2	TWD	24	VH2	+0.96	TEC	TEH			46	HOT	600UL
		0.45	79	P 2	TWD	20	VH2	-0.92	TEC	TEH			46	HOT	600UL
101	37	0.54	84	P 2	TWD	22	03H	+0.84	TEC	TEH			42	HOT	600UL
101	97	0.15	106	2	SAI		TSH	+1.65	TSH	TSH	0.0	17.87	276	HOT	580PP
101	143	0.33	121	P 3	TWD	17	DBH	+1.95	TEC	TEH			47	HOT	600UL
		0.41	100	P 2	TWD	21	VH2	-0.85	TEC	TEH			47	HOT	600UL
		0.19	92	P 5	TWD	17	DBH	+2.09	DBH	DBH			323	HOT	560P2
101	147	0.39	96	P 2	TWD	17	VH2	+0.81	TEC	TEH			50	HOT	600UL
		0.35	106	P 2	TWD	16	VH2	-0.92	TEC	TEH			50	HOT	600UL
101	151	0.45	115	P 2	TWD	20	VH2	+0.83	TEC	TEH			50	HOT	600UL
102	56	0.32	104	P 2	TWD	14	VH2	-0.79	TEH	TEC			47	COLD	600UL
102	58	0.31	123	P 2	TWD	14	VC3	-0.75	TEH	TEC			47	COLD	600UL
		0.27	79	P 2	TWD	12	VC2	-0.79	TEH	TEC			47	COLD	600UL
		0.15	99	P 5	TWD	13	VC2	-0.81	VC2	VC2			163	COLD	560P2
		0.18	76	P 5	TWD	14	VC3	-0.59	VC3	VC3			163	COLD	560P2
102	92	0.40	126	P 2	TWD	18	03H	+0.84	TEH	TEC			26	COLD	600UL
102	120	0.31	121	P 2	TWD	13	VH2	-0.89	TEH	TEC			17	COLD	600UL
102	122	0.45	94	P 2	TWD	19	VC2	-0.80	TEH	TEC			16	COLD	600UL
		0.18	120	2	SAI		VC2	-0.83	VC2	VC2	0.0		171	COLD	560P2
103	39	0.12	131	2	SAI		06H	+1.38	06H	06H	0.00		286	HOT	580PP
		0.15	89	2	SAI		06H	+1.99	06H	06H	0.45		286	HOT	580PP
		0.12	57	2	SAI		06H	+2.02	06H	06H	0.33		286	HOT	580PP
		0.19	94	2	SAI		06H	+3.38	06H	06H	0.48		286	HOT	580PP
		0.11	140	2	SAI		06H	+4.40	06H	06H	0.00		286	HOT	580PP
		0.12	73	2	SAI		06H	+17.83	06H	06H	0.00		286	HOT	580PP
103	47	0.41	54	P 2	TWD	17	VH2	-0.86	TEH	TEC			45	COLD	600UL
103	97	0.37	65	P 2	TWD	17	06H	+0.76	TEH	TEC			26	COLD	600UL
103	137	0.37	75	P 2	TWD	17	VH3	-0.91	TEC	TEH			46	HOT	600UL
		0.14	82	P 5	TWD	13	VH3	-0.91	VH3	VH3			323	HOT	560P2
104	94	0.38	117	P 2	TWD	18	VSM	-0.83	TEH	TEC			26	COLD	600UL

MAI, MCI, MMI, MVI, SAI, SCI, SVI, 0-100%

QUERY: rpc_icodes_and_0-100%twd.qry

ROW	LINE	VOLTS	DEG	CHN	IND	%TW	LOCATION		EXT	EXT	UTIL 1	UTIL 2	CAL #	LEG	PROBE
104	122	0.32	118	P 2	TWD	14	VH2	-0.72	TEH	TEC			17	COLD	600UL
105	87	0.38	40	P 2	TWD	16	VC2	+0.65	TEH	TEC			31	COLD	600UL
105	91	0.45	93	P 2	TWD	20	01H	+0.95	TEH	TEC			26	COLD	600UL
105	93	0.30	146	P 2	TWD	15	VSM	+0.78	TEH	TEC			26	COLD	600UL
105	137	0.37	59	P 2	TWD	20	VH2	-0.84	TEC	TEH			47	HOT	600UL
105	141	0.49	155	P 3	TWD	22	DBH	+1.75	TEC	TEH			47	HOT	600UL
		0.12	83	P 5	TWD	11	DBH	+2.02	DBH	DBH			323	HOT	560P2
106	62	0.29	98	P 2	TWD	14	VC2	-0.65	TEH	TEC			49	COLD	600UL
106	86	0.20	22	P 3	TWD	9	DBH	-2.06	TEH	TEC			31	COLD	600UL
106	88	0.51	45	P 2	TWD	19	01H	+0.86	TEH	TEC			29	COLD	600UL
106	104	0.22	23	P 2	TWD	10	VC2	-0.75	TEH	TEC			21	COLD	600UL
		0.12	84	2	SAI		TSH	+1.91	TSH	TSH	0.0	18.15	306	HOT	580PP
106	132	0.26	104	P 2	TWD	12	VH2	-0.95	TEC	TEH			40	HOT	600UL
106	136	0.31	128	P 2	TWD	15	VH2	-0.89	TEC	TEH			46	HOT	600UL
106	146	0.25	174	P 3	TWD	13	DBH	+1.15	TEC	TEH			47	HOT	600UL
107	33	0.54	17	P 3	TWD	20	DBC	+2.06	TEC	TEH			39	HOT	600UL
		0.27	81	P 5	TWD	19	DBC	+2.06	DBC	DBC			164	COLD	560P2
107	35	0.59	164	P 3	TWD	23	DBC	+1.61	TEC	TEH			42	HOT	600UL
		0.38	79	P 5	TWD	25	DBC	+1.61	DBC	DBC			164	COLD	560P2
107	37	0.48	55	P 3	TWD	21	DBC	+1.70	TEC	TEH			43	HOT	600UL
107	103	0.51	52	P 2	TWD	19	VH2	-0.92	TEH	TEC			21	COLD	600UL
		0.26	88	P 5	TWD	19	VH2	-0.77	VH2	VH2			326	HOT	560P2
108	42	0.17	99	P 5	TWD	10	DBH	-2.20	DBH	DBH			347	HOT	560P2
		0.18	84	P 5	TWD	13	DBH	+1.85	DBH	DBH			347	HOT	560P2
		0.36	79	P 3	TWD	17	DBH	+1.81	TEC	TEH			43	HOT	600UL
		0.43	108	P 3	TWD	19	DBH	-2.10	TEC	TEH			43	HOT	600UL
108	74	0.23	27	P 2	TWD	12	VH2	-0.77	TEH	TEC			53	COLD	600UL
108	110	1.26	25	2	MAI		TSH	-14.99	TSH	TSH	1.85	18.03	300	HOT	580PP
108	136	0.35	111	P 2	TWD	17	VH2	-0.85	TEC	TEH			41	HOT	600UL
109	47	0.35	108	P 5	TWD	21	VSM	-1.00	VSM	VSM			347	HOT	560P2
		0.28	144	P 2	TWD	15	VSM	-0.95	TEH	TEC			46	COLD	600UL
		0.24	116	P 2	TWD	13	VC3	-0.85	TEH	TEC			46	COLD	600UL
		0.29	98	P 5	TWD	21	VC3	-0.81	VC3	VC3			163	COLD	560P2
109	55	0.30	81	P 2	TWD	13	VH2	-0.72	TEH	TEC			48	COLD	600UL
110	34	0.20	103	P 5	TWD	12	VH2	+0.97	VH2	VH2			347	HOT	560P2
		0.27	134	P 2	TWD	13	VH2	+0.87	TEC	TEH			38	HOT	600UL
110	50	0.26	90	2	SAI		06H	+0.50	06H	06H	0.00		241	HOT	580PP
111	43	0.39	49	P 2	TWD	18	VH3	-1.02	TEC	TEH			42	HOT	600UL
111	47	0.24	127	2	SAI		05H	+0.29	05H	05H	0.00		235	HOT	580PP
		0.41	149	P 2	TWD	17	05H	+0.27	TEH	TEC			45	COLD	600UL
111	87	0.38	75	P 2	TWD	17	VC2	+0.95	TEH	TEC			30	COLD	600UL
		0.15	99	P 5	TWD	13	VC2	+0.95	VC2	VC2			163	COLD	560P2
111	89	0.37	84	P 2	TWD	17	01H	+0.93	TEH	TEC			26	COLD	600UL
111	99	0.17	102	P 5	TWD	12	09C	+0.60	09C	09C			136	COLD	580PP
		0.44	81	P 2	TWD	20	09C	+0.55	TEH	TEC			26	COLD	600UL
111	137	0.42	87	P 2	TWD	19	VH2	-0.87	TEC	TEH			46	HOT	600UL

MAI, MCI, MMI, MVI, SAI, SCI, SVI, 0-100%

QUERY: rpc_icodes_and_0-100%twd.qry

ROW	LINE	VOLTS	DEG	CHN	IND	%TW	LOCATION	EXT	EXT	UTIL 1	UTIL 2	CAL #	LEG	PROBE
		0.35	67	P 2	TWD	16	VH2 +0.74	TEC	TEH			46	HOT	600UL
112	38	0.12	106	2	MAI		07H -15.38 TO-21.03	07H	07H	0.00		287	HOT	580PP
112	72	0.35	24	P 2	TWD	15	VH3 +0.84	TEH	TEC			51	COLD	600UL
112	120	2.52	25	2	SAI		TSH -15.78	TSH	TSH	3.12	17.87	297	HOT	580PP
112	128	0.19	97	P 2	TWD	8	VH2 +0.15	TEH	TEC			13	COLD	600UL
		0.20	85	2	SAI		VH2 +0.31	VH2	VH2	0.26		326	HOT	560P2
112	144	0.42	51	P 3	TWD	19	DBC +2.19	TEC	TEH			46	HOT	600UL
		0.30	62	P 5	TWD	15	DBC +2.25	DBC	DBC			166	COLD	560P2
113	53	0.23	74	P 2	TWD	11	VC2 -0.55	TEH	TEC			47	COLD	600UL
113	67	0.36	121	P 2	TWD	15	09H -1.08	TEH	TEC			52	COLD	600UL
113	77	0.32	87	P 2	TWD	12	VC3 +0.92	TEH	TEC			32	COLD	600UL
		0.16	80	P 5	TWD	13	VC3 +0.92	VC3	VC3			163	COLD	560P2
113	105	0.28	26	P 2	TWD	14	VH2 +0.88	TEH	TEC			20	COLD	600UL
		0.33	73	P 2	TWD	16	VH3 +0.92	TEH	TEC			20	COLD	600UL
		0.14	82	P 5	TWD	11	VH3 +1.11	VH3	VH3			326	HOT	560P2
		0.22	89	P 5	TWD	16	VH2 +1.02	VH2	VH2			326	HOT	560P2
113	125	0.18	92	P 5	TWD	14	05H -0.57	05H	05H			295	HOT	580PP
113	131	0.31	109	P 3	TWD	16	DBH +1.81	TEC	TEH			41	HOT	600UL
114	34	0.30	8	2	SAI		TSH -5.00	TSH	TSH	0.77	19.48	286	HOT	580PP
114	36	0.21	129	P 3	TWD	10	DBC -1.77	TEC	TEH			43	HOT	600UL
		0.17	84	P 5	TWD	13	DBC -1.77	DBC	DBC			164	COLD	560P2
114	40	0.45	104	P 5	TWD	26	DBH +1.81	DBH	DBH			347	HOT	560P2
		0.50	99	P 3	TWD	20	DBH +1.63	TEC	TEH			42	HOT	600UL
114	48	0.44	45	P 2	TWD	18	03H +0.93	TEH	TEC			45	COLD	600UL
114	56	0.19	82	2	SAI		06H +0.38	06H	06H	0.00		241	HOT	580PP
114	62	0.28	115	P 5	TWD	17	DBH -1.81	DBH	DBH			347	HOT	560P2
		0.30	129	P 3	TWD	13	DBH -1.88	TEH	TEC			49	COLD	600UL
114	88	0.38	25	P 2	TWD	15	01H +0.77	TEH	TEC			29	COLD	600UL
114	136	0.30	89	P 5	TWD	19	VC3 +0.84	VC3	VC3			166	COLD	560P2
		0.28	147	P 2	TWD	13	VC3 +0.85	TEC	TEH			40	HOT	600UL
115	39	0.21	125	P 5	TWD	13	VH1 +0.58	VH1	VH1			347	HOT	560P2
		0.50	140	P 2	TWD	21	VH1 +0.94	TEC	TEH			42	HOT	600UL
115	123	0.27	41	P 2	TWD	13	VSM +0.80	TEH	TEC			14	COLD	600UL
115	139	0.24	110	P 2	TWD	12	VH1 +0.96	TEC	TEH			46	HOT	600UL
116	58	0.61	127	P 2	TWD	22	VH1 -0.98	TEH	TEC			48	COLD	600UL
116	60	0.20	145	P 2	TWD	10	VH1 -1.01	TEH	TEC			49	COLD	600UL
116	98	0.29	97	P 2	TWD	14	VC2 -0.83	TEH	TEC			26	COLD	600UL
116	106	0.35	16	2	SAI		TSH -5.02	TSH	TSH	0.00	18.10	304	HOT	580PP
116	122	0.57	27	P 2	TWD	21	VH1 -0.98	TEH	TEC			17	COLD	600UL
116	128	0.36	70	P 2	TWD	14	VH2 -1.19	TEH	TEC			13	COLD	600UL
		0.34	33	P 2	TWD	15	02H +0.86	TEH	TEC			13	COLD	600UL
116	130	0.22	159	P 3	TWD	10	DBH -1.40	TEC	TEH			40	HOT	600UL
116	136	0.28	67	P 2	TWD	14	VH1 -1.09	TEC	TEH			41	HOT	600UL
		0.40	124	P 2	TWD	18	VH2 -1.11	TEC	TEH			41	HOT	600UL
117	73	0.36	61	P 2	TWD	14	04H +0.90	TEH	TEC			52	COLD	600UL

MAI, MCI, MMI, MVI, SAI, SCI, SVI, 0-100%

QUERY: rpc_icodes_and_0-100%twd.qry

ROW	LINE	VOLTS	DEG	CHN	IND	%TW	LOCATION		EXT	EXT	UTIL 1	UTIL 2	CAL #	LEG	PROBE
117	75	0.55	63	P 2	TWD 24	VH1	-0.02		TEH	TEC			53	COLD	600UL
117	129	0.22	77	P 5	TWD 17	05H	-0.20		05H	05H			295	HOT	580PP
		0.39	133	P 2	TWD 17	05H	-0.14		TEH	TEC			12	COLD	600UL
118	56	0.39	55	P 2	TWD 17	VH1	+0.79		TEH	TEC			47	COLD	600UL
118	58	0.43	140	P 2	TWD 18	VH1	-0.85		TEH	TEC			47	COLD	600UL
118	70	0.52	50	P 2	TWD 21	VH1	-0.64		TEH	TEC			51	COLD	600UL
118	72	0.25	107	2	SAI	04H	-7.40	TO-14.94	04H	04H	.51		248	HOT	580PP
118	74	0.47	60	P 2	TWD 21	VH1	-0.77		TEH	TEC			53	COLD	600UL
118	106	0.46	152	P 2	TWD 21	VH1	-0.75		TEH	TEC			20	COLD	600UL
118	126	0.37	130	P 2	TWD 17	VH1	+0.80		TEH	TEC			14	COLD	600UL
		0.39	138	P 2	TWD 18	VH1	-0.78		TEH	TEC			14	COLD	600UL
118	128	0.17	95	P 5	TWD 11	05H	+0.55		05H	05H			294	HOT	580PP
		0.31	82	P 2	TWD 14	05H	+0.65		TEH	TEC			12	COLD	600UL
118	132	0.31	140	P 2	TWD 14	VH1	-1.01		TEC	TEH			40	HOT	600UL
118	138	0.11	176	P 3	TWD 6	DBH	+1.49		TEC	TEH			47	HOT	600UL
119	69	0.57	118	P 2	TWD 21	09H	-1.02		TEH	TEC			52	COLD	600UL
119	79	0.68	115	P 2	TWD 24	VH3	+0.85		TEH	TEC			32	COLD	600UL
		0.54	112	P 5	TWD 24	VH3	+0.95		VH3	VH3			322	HOT	560P2
119	119	0.45	41	P 2	TWD 18	10H	-1.14		TEH	TEC		LOCOK	17	COLD	600UL
		0.25	83	P 5	TWD 18	10H	-1.17		10H	DBH			326	HOT	560P2
119	121	0.49	120	P 2	TWD 19	10H	-1.09		TEH	TEC		LOCOK	17	COLD	600UL
		0.32	92	P 5	TWD 22	10H	-1.37		10H	DBH			326	HOT	560P2
120	38	0.35	37	P 2	TWD 17	10H	+1.25		TEC	TEH			42	HOT	600UL
120	42	0.30	128	P 2	TWD 15	VH1	-0.81		TEC	TEH			42	HOT	600UL
120	50	0.19	128	2	SAI	07H	-0.37		07H	07H	0.66		240	HOT	580PP
120	54	0.60	116	P 2	TWD 23	VH1	-0.83		TEH	TEC			47	COLD	600UL
120	62	0.41	127	P 2	TWD 16	VH1	-0.90		TEH	TEC			50	COLD	600UL
120	68	0.44	70	P 2	TWD 17	VH1	-0.96		TEH	TEC			52	COLD	600UL
		0.14	110	P 5	TWD 7	VH1	-0.80		VH1	VH1			347	HOT	560P2
120	70	0.35	124	P 2	TWD 14	VH1	-0.89		TEH	TEC			52	COLD	600UL
120	72	0.41	101	P 5	TWD 21	10H	-1.03		10H	10H			249	HOT	580PP
		0.45	146	P 2	TWD 19	VH1	-0.72		TEH	TEC			51	COLD	600UL
		0.54	128	P 2	TWD 21	10H	-1.09		TEH	TEC			51	COLD	600UL
120	74	0.49	111	P 2	TWD 22	VH1	-0.64		TEH	TEC			53	COLD	600UL
		0.65	105	P 2	TWD 26	10H	-1.54		TEH	TEC		LOCOK	53	COLD	600UL
120	88	0.35	77	P 2	TWD 17	VH1	-0.75		TEH	TEC			28	COLD	600UL
120	98	0.42	30	P 2	TWD 19	VH1	-0.79		TEH	TEC			26	COLD	600UL
121	39	0.28	41	P 2	TWD 14	10H	-1.83		TEC	TEH		LOCOK	42	HOT	600UL
121	45	0.60	144	P 2	TWD 24	VC2	-0.57		TEC	TEH			44	HOT	600UL
121	57	0.23	85	P 5	TWD 16	10C	-1.57		10C	10C		LOCOK	136	COLD	580PP
		0.45	106	P 2	TWD 17	10C	-1.32		TEH	TEC		LOCOK	48	COLD	600UL
121	67	0.49	100	P 2	TWD 19	09H	-1.00		TEH	TEC			52	COLD	600UL
121	83	0.57	116	P 2	TWD 21	VC3	-0.90		TEH	TEC			31	COLD	600UL
		0.25	83	P 5	TWD 19	VC3	-0.91		VC3	VC3			163	COLD	560P2

MAI, MCI, MMI, MVI, SAI, SCI, SVI, 0-100%

QUERY: rpc_icodes_and_0-100%twd.qry

ROW	LINE	VOLTS	DEG	CHN	IND	%TW	LOCATION		EXT	EXT	UTIL 1	UTIL 2	CAL #	LEG	PROBE
121	109	0.62	79	P 2	TWD 25	10H		-1.51	TEH	TEC	LAR	LOCOK	18	COLD	600UL
		0.17	128	P 5	TWD 13	10H		+1.00	10H	10H			301	HOT	580PP
		0.22	90	P 5	TWD 17	10H		-1.54	10H	10H			301	HOT	580PP
122	52	0.48	116	P 2	TWD 19	VH1		-0.85	TEH	TEC			47	COLD	600UL
122	88	0.28	64	P 2	TWD 12	VH1		+0.77	TEH	TEC			29	COLD	600UL
122	118	0.43	120	P 2	TWD 17	VH1		-0.94	TEH	TEC			17	COLD	600UL
		0.35	68	P 2	TWD 15	VH2		+0.77	TEH	TEC			17	COLD	600UL
122	126	0.45	107	P 2	TWD 20	VH3		+1.21	TEH	TEC			14	COLD	600UL
123	61	0.43	28	P 2	TWD 19	03H		-0.77	TEH	TEC			49	COLD	600UL
123	117	0.57	82	P 2	TWD 21	03H		+0.82	TEH	TEC			17	COLD	600UL
		0.27	145	P 3	TWD 12	DBH		-1.63	TEH	TEC			17	COLD	600UL
		0.22	86	P 5	TWD 16	DBH		-1.63	DBH	DBH			326	HOT	560P2
123	121	0.30	85	P 2	TWD 13	VH1		-0.85	TEH	TEC			17	COLD	600UL
124	42	0.25	102	P 2	TWD 12	VH1		-1.04	TEC	TEH			43	HOT	600UL
124	54	0.55	102	P 2	TWD 21	VH1		-0.81	TEH	TEC			47	COLD	600UL
124	56	0.66	116	P 2	TWD 23	VH1		-0.83	TEH	TEC			48	COLD	600UL
124	68	0.40	130	P 2	TWD 16	VH1		-0.96	TEH	TEC			52	COLD	600UL
124	98	0.51	13	P 3	TWD 20	DBH		+2.14	TEH	TEC			26	COLD	600UL
		0.24	107	P 5	TWD 12	DBH		+1.59	DBH	DBH			322	HOT	560P2
125	49	0.33	94	P 2	TWD 17	03H		-0.82	TEH	TEC			46	COLD	600UL
125	53	0.37	119	P 2	TWD 16	VH1		-0.85	TEH	TEC			47	COLD	600UL
		0.34	112	P 5	TWD 18	VH1		-0.85	VH1	VH1			327	HOT	560P2
125	55	0.30	116	P 3	TWD 12	DBH		+1.85	TEH	TEC			48	COLD	600UL
		0.65	93	P 5	TWD 28	DBH		+2.00	DBH	DBH			327	HOT	560P2
125	77	0.27	52	P 2	TWD 12	VH1		-0.83	TEH	TEC			33	COLD	600UL
		0.33	93	P 2	TWD 14	VH1		+0.79	TEH	TEC			33	COLD	600UL
		0.38	111	P 5	TWD 18	VH1		+0.68	VH1	VH1			322	HOT	560P2
125	97	0.25	80	P 2	TWD 13	VH3		+0.79	TEH	TEC			26	COLD	600UL
125	111	0.29	141	P 3	TWD 13	DBH		+1.84	TEH	TEC			19	COLD	600UL
		0.29	92	P 5	TWD 20	DBH		+1.84	DBH	DBH			326	HOT	560P2
125	119	0.30	74	P 3	TWD 12	DBH		+1.75	TEH	TEC			16	COLD	600UL
		0.31	95	P 5	TWD 21	DBH		+1.75	DBH	DBH			326	HOT	560P2
125	121	0.41	142	P 2	TWD 18	VH1		-0.82	TEH	TEC			16	COLD	600UL
126	48	0.66	115	P 2	TWD 24	VH1		-1.23	TEH	TEC			45	COLD	600UL
126	50	0.36	122	P 2	TWD 16	VH1		-0.98	TEH	TEC			45	COLD	600UL
126	52	0.33	123	P 2	TWD 15	VH1		-1.05	TEH	TEC			47	COLD	600UL
126	56	0.57	114	P 2	TWD 22	VH1		-1.01	TEH	TEC			47	COLD	600UL
126	102	0.31	126	P 3	TWD 14	DBH		-1.58	TEH	TEC			20	COLD	600UL
		0.29	83	P 5	TWD 20	DBH		-1.58	DBH	DBH			326	HOT	560P2
126	108	0.20	151	P 3	TWD 10	DBH		-1.48	TEH	TEC			21	COLD	600UL
		0.24	90	P 5	TWD 17	DBH		-1.48	DBH	DBH			326	HOT	560P2
126	112	0.28	134	2	SAI	07H		+0.47	07H	07H	0.00		301	HOT	580PP
126	118	0.36	34	P 2	TWD 15	VH2		-0.19	TEH	TEC			17	COLD	600UL
		0.34	30	P 2	TWD 14	06C		+1.20	TEH	TEC			17	COLD	600UL
126	120	0.39	113	P 2	TWD 16	VH1		-1.07	TEH	TEC			16	COLD	600UL

MAI, MCI, MMI, MVI, SAI, SCI, SVI, 0-100%

QUERY: rpc_icodes_and_0-100%twd.qry

ROW	LINE	VOLTS	DEG	CHN	IND	%TW	LOCATION		EXT	EXT	UTIL 1	UTIL 2	CAL #	LEG	PROBE
126	122	0.47	65	P 2	TWD	19	VH1	-1.12	TEH	TEC			16	COLD	600UL
126	124	0.55	116	P 2	TWD	23	VH1	-1.13	TEH	TEC			14	COLD	600UL
126	126	0.42	116	P 2	TWD	19	VH1	-1.20	TEH	TEC			14	COLD	600UL
127	89	0.39	45	P 2	TWD	18	VH1	-0.79	TEH	TEC			26	COLD	600UL
127	115	0.19	115	2	MAI		07H	-30.70 TO-10.30	07H	07H	0.22		300	HOT	580PP
127	123	0.34	123	P 2	TWD	16	09C	-1.17	TEH	TEC			14	COLD	600UL
128	56	0.28	166	P 3	TWD	12	DBH	+2.03	TEH	TEC			70	COLD	600UL
		0.41	150	P 2	TWD	19	VH1	-0.84	TEH	TEC			70	COLD	600UL
		0.57	92	P 5	TWD	25	DBH	+1.59	DBH	DBH			327	HOT	560P2
128	70	0.38	115	P 2	TWD	15	VH1	-0.88	TEH	TEC			52	COLD	600UL
128	72	0.24	105	P 5	TWD	14	10H	-1.00	10H	10H			249	HOT	580PP
		0.32	95	P 5	TWD	17	10H	+0.88	10H	10H			249	HOT	580PP
		0.43	146	P 2	TWD	18	10H	+0.95	TEH	TEC			51	COLD	600UL
		0.50	136	P 2	TWD	20	10H	-1.15	TEH	TEC			51	COLD	600UL
128	116	0.34	117	P 2	TWD	16	VH1	-0.63	TEH	TEC			18	COLD	600UL
		0.42	149	P 2	TWD	19	VH1	+0.70	TEH	TEC			18	COLD	600UL
129	47	0.26	98	P 5	TWD	17	10H	+0.76	10H	10H			292	HOT	580PP
		0.40	144	P 2	TWD	17	10H	+0.77	TEH	TEC			45	COLD	600UL
129	49	0.45	76	P 2	TWD	21	VH1	-0.80	TEH	TEC			46	COLD	600UL
		0.31	89	P 2	TWD	16	VH1	+0.84	TEH	TEC			46	COLD	600UL
		0.29	101	P 2	TWD	15	VC1	+0.84	TEH	TEC			46	COLD	600UL
		0.35	92	P 5	TWD	17	VH1	+0.92	VH1	VH1			327	HOT	560P2
		0.42	113	P 5	TWD	20	VH1	-0.95	VH1	VH1			327	HOT	560P2
129	73	0.20	31	P 3	TWD	9	DBH	+1.91	TEH	TEC			53	COLD	600UL
		0.32	85	P 5	TWD	17	DBH	+1.91	DBH	DBH			327	HOT	560P2
129	89	0.34	99	P 2	TWD	14	VH2	+0.86	TEH	TEC			27	COLD	600UL
		0.35	121	P 5	TWD	17	VH2	+0.92	VH2	VH2			322	HOT	560P2
		0.29	121	P 5	TWD	15	VH2	-0.79	VH2	VH2			322	HOT	560P2
129	109	0.43	153	P 2	TWD	19	10H	-1.02	TEH	TEC			18	COLD	600UL
		0.29	104	P 5	TWD	21	10H	-1.02	10H	10H			301	HOT	580PP
130	48	0.35	103	P 5	TWD	21	02C	-0.15	02C	02C			136	COLD	580PP
		0.41	65	P 2	TWD	17	02C	-0.17	TEH	TEC			45	COLD	600UL
130	52	0.50	131	P 2	TWD	20	VH1	-0.84	TEH	TEC			47	COLD	600UL
130	54	0.64	78	P 2	TWD	24	VH1	-0.81	TEH	TEC			47	COLD	600UL
130	56	0.39	150	P 2	TWD	17	VH1	-0.95	TEH	TEC			47	COLD	600UL
130	60	0.42	93	P 2	TWD	18	VH1	-0.83	TEH	TEC			49	COLD	600UL
130	64	0.48	117	P 2	TWD	20	VH1	-0.96	TEH	TEC			49	COLD	600UL
130	74	0.37	60	P 2	TWD	18	10H	+0.93	TEH	TEC			53	COLD	600UL
		0.21	91	P 5	TWD	13	10H	+0.87	10H	10H			253	HOT	580PP
130	78	0.34	114	P 5	TWD	22	10H	-1.05	10H	10H			289	HOT	580PP
130	94	0.37	136	P 2	TWD	17	VH1	-0.59	TEH	TEC			26	COLD	600UL
		0.42	117	P 2	TWD	19	VH1	+0.59	TEH	TEC			26	COLD	600UL
130	110	0.35	81	P 2	TWD	16	VH1	-0.80	TEH	TEC			18	COLD	600UL
131	79	0.28	103	2	SAI		07H	-0.61	07H	07H	.41		296	HOT	580PP
132	56	0.50	69	P 2	TWD	19	VH1	-0.88	TEH	TEC			57	COLD	600UL
132	106	0.64	112	P 2	TWD	23	10H	-1.16	TEH	TEC			23	COLD	600UL
		0.24	128	P 5	TWD	19	10H	-1.06	10H	10H			302	HOT	580PP
132	116	0.44	149	P 2	TWD	17	VH1	-0.80	TEH	TEC			23	COLD	600UL

MAI, MCI, MMI, MVI, SAI, SCI, SVI, 0-100%

QUERY: rpc_icodes_and_0-100%twd.qry

ROW	LINE	VOLTS	DEG	CHN	IND	%TW	LOCATION		EXT	EXT	UTIL 1	UTIL 2	CAL #	LEG	PROBE
132	122	0.48	91	P 2	TWD	19	VH1	-0.69	TEH	TEC			23	COLD	600UL
133	55	0.24	63	P 2	TWD	10	02H	+0.23	TEH	TEC			57	COLD	600UL
		0.15	75	P 5	TWD	11	02H	+0.30	02H	02H			293	HOT	580PP
133	81	0.20	100	P 5	TWD	22	VH1	+0.93	VH1	VH1			313	HOT	560P2
		0.45	119	P 2	TWD	17	VH1	+1.00	TEH	TEC			25	COLD	600UL
133	119	0.53	82	P 2	TWD	22	VH1	+0.84	TEH	TEC			22	COLD	600UL
		0.30	93	P 5	TWD	15	VH1	+0.84	VH1	VH1			322	HOT	560P2
133	125	0.31	61	P 2	TWD	15	01C	+0.82	TEH	TEC			22	COLD	600UL
		0.18	112	P 5	TWD	13	01C	+0.94	01C	01C			136	COLD	580PP
134	52	0.26	113	P 2	TWD	11	VH1	-0.74	TEH	TEC			58	COLD	600UL
134	58	0.40	84	P 2	TWD	16	VH1	-0.84	TEH	TEC			58	COLD	600UL
134	64	0.32	94	P 2	TWD	13	VH3	-0.92	TEH	TEC			58	COLD	600UL
		0.35	134	P 2	TWD	14	VC3	-0.84	TEH	TEC			58	COLD	600UL
		0.13	84	P 5	TWD	15	VH3	-0.90	VH3	VH3			313	HOT	560P2
		0.35	117	P 5	TWD	16	VC3	-0.84	VC3	VC3			165	COLD	560P2
134	66	0.48	95	P 2	TWD	18	VH1	-0.78	TEH	TEC			58	COLD	600UL
134	76	0.33	55	P 2	TWD	14	VH1	-0.77	TEH	TEC			25	COLD	600UL
134	80	0.15	82	P 5	TWD	18	DBH	+1.90	DBH	DBH			313	HOT	560P2
		0.50	7	P 3	TWD	20	DBH	+1.95	TEH	TEC	LAR		25	COLD	600UL
134	88	0.38	59	P 2	TWD	15	VH1	+0.79	TEH	TEC			25	COLD	600UL
134	92	0.22	126	P 2	TWD	9	VH1	-0.84	TEH	TEC			25	COLD	600UL
134	116	0.49	155	P 2	TWD	21	VH1	-0.75	TEH	TEC			22	COLD	600UL
134	124	0.19	130	P 2	TWD	9	VC3	+0.62	01C	TEH			140	HOT	600UL
		0.31	113	P 5	TWD	15	VC3	+0.74	VC3	VC3			165	COLD	560P2
135	71	0.22	117	P 3	TWD	11	DBH	-1.84	TEH	TEC			58	COLD	600UL
		0.23	87	P 5	TWD	24	DBH	-1.97	DBH	DBH			313	HOT	560P2
135	101	0.22	118	2	SAI		07H	-0.47	07H	07H	0.49		299	HOT	580PP
		0.41	137	P 2	TWD	19	07H	-0.38	TEH	TEC			22	COLD	600UL
136	68	0.42	41	P 2	TWD	17	VH1	-0.91	TEH	TEC			57	COLD	600UL
		0.18	94	P 5	TWD	20	VH1	-0.84	VH1	VH1			313	HOT	560P2
136	76	0.39	12	P 3	TWD	16	DBH	+2.14	TEH	TEC			24	COLD	600UL
		0.30	83	P 5	TWD	16	DBH	+2.00	DBH	DBH			313	HOT	560P2
136	78	0.19	89	P 5	TWD	21	DBH	+1.76	DBH	DBH			313	HOT	560P2
		0.28	116	P 3	TWD	13	DBH	+1.81	TEH	TEC			25	COLD	600UL
		0.31	39	P 2	TWD	14	VH1	+0.81	TEH	TEC			25	COLD	600UL
136	88	0.24	92	P 2	TWD	12	06H	+0.72	TEH	TEC			24	COLD	600UL
		0.15	122	2	SAI		06H	+0.48	06H	06H			299	HOT	580PP
136	90	0.28	69	P 2	TWD	12	VH1	+0.79	TEH	TEC			25	COLD	600UL
136	110	0.22	35	P 2	TWD	10	VH1	-1.01	TEH	TEC			23	COLD	600UL
137	69	0.30	47	P 2	TWD	13	VH1	+0.62	TEH	TEC			57	COLD	600UL
		0.40	95	P 5	TWD	20	VH1	+0.72	VH1	VH1			313	HOT	560P2
137	71	0.34	88	P 3	TWD	14	DBH	-1.73	TEH	TEC			57	COLD	600UL
		0.25	102	P 5	TWD	26	DBH	-1.71	DBH	DBH			313	HOT	560P2
137	117	0.53	107	P 3	TWD	20	DBH	+1.55	TEH	TEC			22	COLD	600UL
		0.42	114	P 2	TWD	19	VH1	-0.88	TEH	TEC			22	COLD	600UL
		0.62	108	P 5	TWD	26	DBH	+1.67	DBH	DBH	ATC		322	HOT	560P2
		0.28	108	P 5	TWD	14	VH1	-0.88	VH1	VH1			322	HOT	560P2
138	58	0.41	34	P 3	TWD	17	DBH	+1.82	TEH	TEC			58	COLD	600UL
		0.15	63	P 5	TWD	18	DBH	+2.15	DBH	DBH			313	HOT	560P2

MAI, MCI, MMI, MVI, SAI, SCI, SVI, 0-100%

QUERY: rpc_icodes_and_0-100%twd.qry

ROW	LINE	VOLTS	DEG	CHN	IND	%TW	LOCATION		EXT	EXT	UTIL 1	UTIL 2	CAL #	LEG	PROBE
138	64	0.34	126	P 2	TWD 14	10H	+0.80		TEH	TEC			58	COLD	600UL
		0.15	102	P 5	TWD 11	10H	+0.68		10H	10H			293	HOT	580PP
138	68	0.26	63	P 2	TWD 11	VH2	-0.84		TEH	TEC			58	COLD	600UL
		0.31	28	P 2	TWD 13	VH2	+0.86		TEH	TEC			58	COLD	600UL
138	76	0.66	93	P 5	TWD 29	DBH	+2.00		DBH	VH1			313	HOT	560P2
		0.77	14	P 3	TWD 27	DBH	+2.00		TEH	TEC	LAR		25	COLD	600UL
138	80	0.22	60	P 2	TWD 11	VH1	-0.88		TEH	TEC			24	COLD	600UL
		0.13	79	P 5	TWD 15	VH1	-0.66		VH1	VH1			313	HOT	560P2
138	86	0.20	101	2	SAI	06H	-0.24		06H	06H	0.00		299	HOT	580PP
138	92	0.51	36	P 2	TWD 20	07C	+1.25		TEH	TEC			25	COLD	600UL
138	102	0.42	115	P 2	TWD 19	VH1	-0.63		TEH	TEC			22	COLD	600UL
138	104	0.55	150	P 2	TWD 23	VH1	-0.65		TEH	TEC			22	COLD	600UL
138	110	0.31	11	2	SAI	TSH	-4.26		TSH	TSH	0.0	18.03	302	HOT	580PP
139	61	0.22	112	P 5	TWD 15	09C	-0.99		09C	09C			136	COLD	580PP
		0.26	121	P 2	TWD 11	09C	-1.06		TEH	TEC			58	COLD	600UL
139	103	0.56	106	P 2	TWD 21	VH2	+0.88		TEH	TEC			23	COLD	600UL
		0.50	105	P 5	TWD 23	VH2	+0.88		VH2	VH2			322	HOT	560P2
139	115	0.31	144	P 3	TWD 13	DBH	+1.32		TEH	TEC			22	COLD	600UL
		0.41	106	P 5	TWD 26	DBH	+0.29	TO+1.93	DBH	DBH			322	HOT	560P2
140	76	0.38	78	P 2	TWD 18	VH1	-0.81		TEH	TEC			24	COLD	600UL
140	90	0.34	53	P 2	TWD 14	VH1	-0.83		TEH	TEC			25	COLD	600UL
140	96	0.46	123	P 2	TWD 20	VH1	-0.98		TEH	TEC			22	COLD	600UL
140	100	0.24	88	P 2	TWD 10	VC1	+0.91		TEH	TEC			23	COLD	600UL
140	112	0.35	89	P 5	TWD 22	DBC	+1.80		DBC	DBC			165	COLD	560P2
		0.33	134	P 3	TWD 13	DBC	+1.69		TEH	TEC			22	COLD	600UL
141	67	0.33	92	P 2	TWD 13	09C	-1.08		TEH	TEC			58	COLD	600UL
		0.24	105	P 5	TWD 16	09C	-1.01		09C	09C			136	COLD	580PP
141	77	0.27	129	P 2	TWD 12	VH1	+0.83		TEH	TEC			25	COLD	600UL
141	89	0.37	90	P 2	TWD 15	VH1	-0.66		TEH	TEC			25	COLD	600UL
		0.26	95	P 5	TWD 13	VH1	-0.46		VH1	VH1			317	HOT	560P2
141	103	0.20	106	P 5	TWD 14	VH3	-1.03		VH3	VH3			322	HOT	560P2
		0.33	98	P 2	TWD 16	VH3	-0.85		TEH	TEC			22	COLD	600UL
141	109	0.49	76	P 2	TWD 19	VH3	-0.02		TEH	TEC			23	COLD	600UL
		0.18	101	P 5	TWD 13	VH3	-0.02		VH3	VH3			322	HOT	560P2
142	72	0.40	98	P 3	TWD 17	DBC	+1.20		TEH	TEC			58	COLD	600UL
		0.64	106	P 5	TWD 28	DBC	+1.74		DBC	DBC			165	COLD	560P2
142	86	1.09	15	P 1	SCI	TSH	-0.88		TSH	TSH	1.76	18.60	299	HOT	580PP
		0.31	99	P 2	TWD 13	VH1	-0.85		TEH	TEC			25	COLD	600UL
142	88	0.30	62	P 2	TWD 12	VH1	-0.81		TEH	TEC			25	COLD	600UL
142	92	0.47	121	P 2	TWD 18	VH1	-0.88		TEH	TEC			25	COLD	600UL
		0.35	114	P 5	TWD 17	VH1	-0.78		VH1	VH1			317	HOT	560P2
143	71	0.24	117	P 2	TWD 10	VH2	-0.92		TEH	TEC			58	COLD	600UL
		0.54	94	P 2	TWD 20	VH1	-0.84		TEH	TEC			58	COLD	600UL
		0.50	93	P 2	TWD 19	VH1	+0.64		TEH	TEC			58	COLD	600UL
		0.61	167	P 3	TWD 23	DBH	+1.82		TEH	TEC			58	COLD	600UL
		0.45	78	P 5	TWD 36	DBH	+1.28		DBH	VH2			313	HOT	560P2
		0.16	83	P 5	TWD 18	VH1	+0.71		DBH	VH2			313	HOT	560P2
		0.24	87	P 5	TWD 25	VH1	-0.71		DBH	VH2			313	HOT	560P2
		0.21	91	P 5	TWD 12	VH2	-0.90		DBH	VH2			313	HOT	560P2

MAI, MCI, MMI, MVI, SAI, SCI, SVI, 0-100%

QUERY: rpc_icodes_and_0-100%twd.qry

ROW	LINE	VOLTS	DEG	CHN	IND	%TW	LOCATION		EXT	EXT	UTIL 1	UTIL 2	CAL #	LEG	PROBE
143	73	0.42	103	P 5	TWD 20	VC2		-0.87	VC2	VC2			166	COLD	560P2
		0.37	99	P 5	TWD 23	VC1		-0.89	VC1	VC1			166	COLD	560P2
		0.86	99	P 5	TWD 35	DBC		-1.49	DBC	DBC			166	COLD	560P2
		0.34	103	P 5	TWD 17	DBC		+1.76	DBC	DBC			166	COLD	560P2
		0.39	109	P 2	TWD 15	VH1		+0.84	TEH	TEC			58	COLD	600UL
		0.46	87	P 2	TWD 18	VC2		-0.88	TEH	TEC			58	COLD	600UL
		0.61	121	P 2	TWD 22	VC1		-0.84	TEH	TEC			58	COLD	600UL
		0.45	120	P 3	TWD 19	DBC		-1.42	TEH	TEC			58	COLD	600UL
		0.24	76	P 3	TWD 11	DBC		+1.88	TEH	TEC			58	COLD	600UL
		0.11	95	P 5	TWD 14	VH1		+0.16	VH1	VH1			313	HOT	560P2
143	81	0.30	110	P 5	TWD 15	VC1		-0.93	VC1	VC1			166	COLD	560P2
		0.26	33	P 2	TWD 13	VC1		-0.81	TEH	TEC			24	COLD	600UL
143	87	0.31	91	P 2	TWD 15	10C		+0.86	TEH	TEC			24	COLD	600UL
		0.55	81	P 3	TWD 21	DBC		+1.77	TEH	TEC			24	COLD	600UL
		0.17	91	P 5	TWD 12	10C		+0.91	10C	10C			136	COLD	580PP
		0.33	110	P 5	TWD 16	DBC		-1.77	DBC	DBC			165	COLD	560P2
		0.78	102	P 5	TWD 32	DBC		+1.91	DBC	DBC			165	COLD	560P2
143	103	0.64	74	P 3	TWD 24	DBH		+1.60	TEH	TEC			23	COLD	600UL
		0.86	97	P 5	TWD 40	DBH		+1.70	DBH	DBH			322	HOT	560P2
143	109	0.72	106	P 5	TWD 30	DBC		-1.79	DBC	DBC			165	COLD	560P2
		0.53	79	P 3	TWD 19	DBC		-1.91	TEH	TEC			22	COLD	600UL
144	74	0.73	102	P 5	TWD 31	VC1		+1.01	VC1	VC1			166	COLD	560P2
		0.61	107	P 5	TWD 27	DBC		-1.56	DBC	DBC			166	COLD	560P2
		1.07	102	P 2	TWD 31	VC1		+0.94	TEH	TEC			58	COLD	600UL
		0.62	58	P 3	TWD 23	DBH		+1.84	TEH	TEC			58	COLD	600UL
		0.34	98	P 3	TWD 15	DBC		-1.56	TEH	TEC			58	COLD	600UL
		0.84	98	P 5	TWD 34	DBH		+1.53	DBH	DBH			313	HOT	560P2
144	78	0.24	103	P 5	TWD 12	VC1		+0.91	VC1	VC1			166	COLD	560P2
		0.28	131	P 2	TWD 14	VC1		+0.83	TEH	TEC			24	COLD	600UL
144	84	0.50	106	P 5	TWD 23	DBC		-1.90	DBC	DBC			166	COLD	560P2
		0.32	112	P 5	TWD 16	DBC		+1.83	DBC	DBC			166	COLD	560P2
		0.22	89	P 3	TWD 10	DBC		-1.63	TEH	TEC			24	COLD	600UL
144	90	0.24	115	P 2	TWD 10	VH1		-0.83	TEH	TEC			25	COLD	600UL
144	102	0.56	114	P 5	TWD 24	DBH		-1.90	DBH	DBH	ATC		322	HOT	560P2
		0.33	135	P 3	TWD 14	DBH		-1.59	TEH	TEC			22	COLD	600UL
145	75	0.74	151	P 3	TWD 26	DBH		+1.89	TEH	TEC			58	COLD	600UL
		0.40	86	P 5	TWD 34	DBH		+2.12	DBH	DBH			313	HOT	560P2
145	81	0.26	87	P 5	TWD 26	DBH		+1.61	DBH	DBH			313	HOT	560P2
		0.36	90	P 5	TWD 32	VH1		+0.96	VH1	VH1			313	HOT	560P2
		0.50	34	P 3	TWD 20	DBH		+1.86	TEH	TEC			25	COLD	600UL
		0.87	120	P 2	TWD 28	VH1		+0.88	TEH	TEC			25	COLD	600UL
145	89	0.47	55	P 2	TWD 18	VC2		+0.91	TEH	TEC			25	COLD	600UL
		0.40	103	P 5	TWD 19	VC2		+0.90	VC2	VC2			165	COLD	560P2
145	99	0.40	127	P 3	TWD 17	DBH		+1.91	TEH	TEC			23	COLD	600UL
		0.89	105	P 5	TWD 34	DBH		+2.09	DBH	DBH	ARS		317	HOT	560P2
145	103	0.61	98	P 5	TWD 33	DBH		+1.49	DBH	DBH			322	HOT	560P2
		0.64	118	P 3	TWD 23	DBH		+1.49	TEH	TEC			22	COLD	600UL
146	78	0.28	85	P 5	TWD 27	DBH		+1.80	DBH	DBH			313	HOT	560P2
		0.41	124	P 3	TWD 18	DBH		+1.92	TEH	TEC			25	COLD	600UL
146	86	0.84	105	P 5	TWD 34	DBC		+1.84	DBC	DBC			166	COLD	560P2
		1.27	104	P 5	TWD 41	DBH		+1.76	DBH	DBH			317	HOT	560P2
		0.46	110	P 5	TWD 21	VC1		+1.08	VC1	VC1			165	COLD	560P2
		0.27	138	P 2	TWD 11	VH1		-1.17	TEH	TEC			25	COLD	600UL
		0.25	101	P 2	TWD 11	VC1		+1.02	TEH	TEC			25	COLD	600UL
		0.79	31	P 3	TWD 27	DBH		+1.66	TEH	TEC			25	COLD	600UL
		0.43	108	P 3	TWD 18	DBC		+1.63	TEH	TEC			25	COLD	600UL
146	88	0.64	82	P 5	TWD 34	DBC		+1.86	DBC	DBC			165	COLD	560P2
		0.59	62	P 3	TWD 23	DBC		+1.64	TEH	TEC			25	COLD	600UL

MAI, MCI, MMI, MVI, SAI, SCI, SVI, 0-100%

QUERY: rpc_icodes_and_0-100%twd.qry

ROW	LINE	VOLTS	DEG	CHN	IND	%TW	LOCATION			EXT	EXT	UTIL 1	UTIL 2	CAL #	LEG	PROBE
146	92	0.26	83	P 3	TWD	12	DBH	+1.73		TEH	TEC			25	COLD	600UL
		0.30	120	P 2	TWD	13	VH1	-1.16		TEH	TEC			25	COLD	600UL
		0.83	103	P 3	TWD	28	DBC	+1.80		TEH	TEC			25	COLD	600UL
		0.28	99	P 5	TWD	14	DBH	-1.52		DBH	DBH			317	HOT	560P2
		0.49	82	P 5	TWD	23	DBH	+1.75		DBH	DBH			317	HOT	560P2
		1.06	79	P 5	TWD	46	DBC	-1.06	TO+2.07	DBC	DBC	APN		165	COLD	560P2
146	94	0.42	105	P 3	TWD	18	DBH	+1.97		TEH	TEC			23	COLD	600UL
		0.88	62	P 3	TWD	29	DBC	+1.76		TEH	TEC			23	COLD	600UL
		0.56	104	P 5	TWD	25	DBH	+2.03		DBH	DBH			317	HOT	560P2
		0.84	81	P 5	TWD	41	DBC	-0.41	TO+2.21	DBC	DBC	APN		165	COLD	560P2
146	98	0.39	39	P 2	TWD	16	03H	-1.19		TEH	TEC			23	COLD	600UL
		0.17	109	2	SAI		03H	-1.11		03H	03H	0.00		299	HOT	580PP

Total Tubes : 798
Total Records: 1422