FRAMATOME ANP

BAW-10239(NP)
Revision 0
43-10239NP-00

Advanced Mark-BW Fuel Assembly Mechanical Design Topical Report

March 2002

Framatome ANP, Inc.

U.S. Nuclear Regulatory Commission
Report Disclaimer

Important Notice Regarding the Contents and Use of This Document

Please Read Carefully

This technical report was derived through research and development programs sponsored by Framatome ANP, Inc. It is being submitted by Framatome ANP, Inc. to the U.S. Nuclear Regulatory Commission as part of a technical contribution to facilitate safety analyses by licensees of the U.S. Nuclear Regulatory Commission which utilize Framatome ANP, Inc. fabricated reload fuel or technical services provided by Framatome ANP, Inc. for light water power reactors and it is true and correct to the best of Framatome ANP, Inc.'s knowledge, information, and belief. The information contained herein may be used by the U.S. Nuclear Regulatory Commission in its review of this report and, under the terms of the respective agreements, by licensees or applicants before the U.S. Nuclear Regulatory Commission which are customers of Framatome ANP, Inc. in their demonstration of compliance with the U.S. Nuclear Regulatory Commission's regulations.

Framatome ANP, Inc.'s warranties and representations concerning the subject matter of this document are those set forth in the agreement between Framatome ANP, Inc. and the Customer pursuant to which this document is issued. Accordingly, except as otherwise expressly provided in such agreement, neither Framatome ANP, Inc. nor any person acting on its behalf:

a. makes any warranty, or representation, express or implied, with respect to the accuracy, completeness, or usefulness of the information contained in this document, or that the use of any information, apparatus, method, or process disclosed in this document will not infringe privately owned rights;

or

b. assumes any liabilities with respect to the use of, or for damages resulting from the use of, any information, apparatus, method, or process disclosed in this document.

Nature of Changes

Item	Section(s) or Page(s)	Description and Justification
Note:		This is a new document.

Contents

1.0 Introduction 1-1

2.0 Summary 2-1

3.0 Advanced Mark-BW Design Description 3-1
- 3.1 Fuel Assembly 3-1
- 3.2 Fuel Rod 3-2
- 3.3 Intermediate Grids 3-3
- 3.4 Low Pressure Drop Top Nozzle 3-5
- 3.5 Debris Filter (TRAPPER) Bottom Nozzle 3-6
- 3.6 M5 Alloy Guide Thimble and Instrument Sheath Tubing 3-6
- 3.7 Materials 3-7
- 3.8 Mid-Span Mixing Grids (MSMGs) 3-7

4.0 LTA Program 4-1

5.0 Design Evaluation 5-1
- 5.1 Fuel System Damage Criteria 5-1
  - 5.1.1 Stress 5-1
  - 5.1.2 Cladding Strain 5-7
  - 5.1.3 Cladding Fatigue 5-8
  - 5.1.4 Fretting 5-8
  - 5.1.5 Oxidation, Hydriding, and Crud Buildup 5-10
  - 5.1.6 Fuel Rod Bow 5-11
  - 5.1.7 Axial Growth 5-11
  - 5.1.8 Fuel Rod Internal Pressure 5-12
  - 5.1.9 Assembly Liftoff 5-13
- 5.2 Fuel Rod Failure Criteria 5-14
  - 5.2.1 Internal Hydriding 5-14
  - 5.2.2 Cladding Collapse 5-14
  - 5.2.3 Overheating of Cladding 5-15
  - 5.2.4 Overheating of Fuel Pellets 5-16
  - 5.2.5 Pellet/Cladding Interaction 5-17
  - 5.2.6 Cladding Rupture 5-17
- 5.3 Fuel Coolability 5-17
  - 5.3.1 Cladding Embrittlement 5-17
  - 5.3.2 Violent Expulsion of Fuel 5-17
  - 5.3.3 Fuel Rod Ballooning 5-17
  - 5.3.4 Fuel Assembly Structural Damage from External Forces 5-17
- 5.4 Design Evaluation Summary 5-20

6.0 References 6-1

Tables

3.1 Comparison of Advanced Mark-BW and Mark-BW Fuel Assembly Parameters 3-9

3.2 Comparison of Advanced Mark-BW and Mark-BW Fuel Rod Parameters 3-10

3.3 Comparison of Advanced Mark-BW and Mark-BW Grid Parameters 3-11

3.4 Comparison of Advanced Mark-BW and Mark-BW Guide Thimble and Instrument Sheath Parameters 3-12

3.5 Summary of Component Materials 3-13

4.1 Mark-BW/X1 LTA Core Operation History 4-3

5.1 Summary of Reactor Coolant System Design Transients 5-22

Figures

3.1 Advanced Mark-BW Fuel Assembly 3-14
3.2 Fuel Rod Assembly 3-15
3.3 Intermediate-Vaned Spacer Grid Assembly 3-16
3.4 End Grid Assembly 3-16
3.5 Intermediate Spacer Grid Features 3-17
3.6 Inner Grid Strip Features 3-17
3.7 Mixing Vane Pattern 3-18
3.8 Intermediate Spacer Grid Restraint System 3-18
3.9 Top End Grid Restraint 3-19
3.10 Bottom End Grid Restraint 3-19
3.11 Mid-Span Mixing Grid 3-20
3.12 Mid-Span Mixing Grid Details 3-21
3.13 Guide Thimble Assembly 3-22
3.14 QD Top Nozzle Assembly 3-23
3.15 Debris Filter Bottom Nozzle - Installed 3-24
3.16 Debris Filter Bottom Nozzle Structure 3-24
3.17 Coarse Mesh Filter Plate Ligament Geometry 3-25
3.18 Fine-Mesh Filter Plate Ligament Geometry 3-26
4.1 Mark-BW/X1 LTA Core Positions 4-4
5.1 Core Loading – All Advanced Mark-BW Fuel Configuration Structural Analysis 5-23
5.2 Core Loading – Mixed Core Configuration Number 1 - Structural Analysis 5-24
5.3 Core Loading – Mixed Core Configuration Number 2 - Structural Analysis 5-25

Nomenclature

Acronym	Definition
AOO	anticipated operational occurrence
ASME	American Society of Mechanical Engineers
B&PV	Boiler and Pressure Vessel
BOL	beginning of life
BWU	Framatome ANP CHF correlation
CHF	critical heat flux
DNB	departure from nucleate boiling
DNBR	departure from nucleate boiling ratio
ECCS	Emergency Core Cooling System
EG	end grid
EOL	end of life
FIV	flow-induced vibration
GWd/MTU	gigawatt-day per metric ton Uranium
ID	inside diameter
LHR	linear heat rate
LOCA	loss-of-coolant accident
LTA	lead test assembly
MSMG	mid-span mixing grid
MWd/MTU	megawatt-days per metric ton Uranium
NRC	U. S. Nuclear Regulatory Commission
OBE	Operational Base Earthquake
OD	outside diameter
PIE	post-irradiation examination
ppm	parts per million
psi	pounds per square inch
PWR	pressurized water reactor
QD	quick disconnect
RCCA	rod cluster control assembly
RMS	root mean square
RXA	recrystallized annealed

Nomenclature *(Continued)*

Acronym	Definition
SER	Safety Evaluation Report
SG	spacer grid
SRP	Standard Review Plan
S.S.	stainless steel
SSE	Safe Shutdown Earthquake
TD	theoretical density
UO_2	uranium dioxide

1.0 Introduction

Framatome ANP has developed the Advanced Mark-BW fuel assembly design for use in Westinghouse three- and four-loop reactors using a 17x17 fuel rod array. This report provides an evaluation of the performance of the Advanced Mark-BW fuel assembly in a sample reactor against the general criteria defined in Section 4.2 of the Standard Review Plan (SRP) (Reference 1). A set of specific criteria consistent with Section 4.2 of the SRP has been previously established in topical reports reviewed and approved by the U. S. Nuclear Regulatory Commission (NRC).

This report is divided into eight major sections, each addressing a significant aspect of the Advanced Mark-BW fuel assembly, focusing on the primary new features, which include the mid-span flow mixing grids and quick disconnect (QD) top nozzle. Section 3.0 describes the Advanced Mark-BW design, highlighting the distinguishing features. Section 4.0 presents the lead test assembly (LTA) program. Section 5.0 provides the fuel assembly and fuel rod example evaluations that address the performance of the Advanced Mark-BW fuel assembly against the criteria of Section 4.2 of the SRP, NUREG-0800 (Reference 1).

Framatome ANP will perform plant-specific evaluations of the performance of the Advanced Mark-BW fuel assembly, which will reference the NRC-approved version of this topical report. These plant-specific evaluations will not be required to be submitted to the NRC for review and approval unless the licensee-performed evaluation per the requirements of 10 CFR 50.59 determines that NRC review and approval is required. The evaluation process described in this report will also be used to justify small changes in the Advanced Mark-BW fuel assembly design without specific NRC review and approval. Examples of such small changes would be fuel rod or fuel assembly length to accommodate reactor-specific dimensions, modifications of spacer grids that do not affect the NRC-approved departure from nucleate boiling ratio (DNBR) correlation for the spacer grids, and substitution of components that have been separately approved by the NRC.

2.0 Summary

The Advanced Mark-BW fuel assembly is a natural evolution of the Mark-BW fuel design that offers additional improvements in performance. The Mark-BW fuel design was reviewed and approved by the NRC for generic use in Reference 2. The significant differences between the Advanced Mark-BW fuel assembly and the Mark-BW fuel assembly described in Reference 2 are summarized below under three categories. Category 1: features implemented on a plant-specific basis since the NRC review and approval of Reference 2. Category 2: features related to the use of M5 material that were reviewed and approved by the NRC in Reference 3. Category 3: features that are new.

Category 1:

- Debris filter bottom nozzle
- Reduction in the number of grid restraining guide thimbles from 12 to 8
- Low pressure drop top nozzle

Category 2:

- M5™* fuel rod cladding
- M5 guide thimbles
- M5 instrument tube sheath
- M5 spacers and mixing grids

Category 3:

- Mid-span mixing grids (MSMGs)
- QD top nozzle connection

The two new features specific to the Advanced Mark-BW design further enhance the design's thermal-hydraulic and mechanical performance.

Improved thermal mixing with the MSMGs increases departure from nucleate boiling (DNB) margins, which provide for more efficient fuel cycle designs. The QD top nozzle facilitates fuel assembly reconstitution, if needed, with quick and reliable top nozzle removal and installation.

---

* M5 is a trademark of Framatome ANP.

The Advanced Mark-BW program was a cooperative effort with Dominion Generation to thoroughly test the design prior to batch implementation. Four "Mark-BW/X1" LTAs were inserted in the core of Dominion Generation's North Anna Unit 1 in 1997. The LTAs successfully completed three cycles of operation with leaker-free performance with a peak pin burnup of ~57 GWd/MTU.

The successful operation to date of LTAs supports the acceptability of the fuel assembly design. In addition, the extensive operating experience of the standard Mark-BW design provides a performance database for many of the same components and key design features that are common to the Advanced Mark-BW fuel assembly. These common key features, which include the floating intermediate spacer grid and bottom nozzle-seated fuel rod design concepts, serve to provide well-predicted and consistent irradiation performance and models, and further enhance the Advanced Mark-BW design bases.

Extensive operating experience and data of Framatome ANP pressurized water reactor (PWR) fuel throughout the world, utilizing the M5 alloy, also provide design bases for consistent irradiation performance and models used for the Advanced Mark-BW fuel design. The M5 alloy and associated models and methods are approved for use in Reference 3. The Safety Evaluation Report (SER) for Reference 3 limits the Mark-BW fuel rod burnup to 60,000 MWd/MTU. The justification for increasing the burnup limit to 62,000 MWd/MTU is provided in Reference 4. The Advanced Mark-BW fuel assembly is designed to achieve a peak fuel rod burnup of 62,000 MWd/MTU, which is consistent with the burnup limits supported in Reference 4.

Based on the results of comprehensive testing, analysis, and reactor performance, the Advanced Mark-BW fuel assembly design is acceptable for batch implementation in Westinghouse-designed PWRs using 17x17-type fuel assemblies.

3.0 Advanced Mark-BW Design Description

The Advanced Mark-BW fuel assembly comprises a 17x17 rod array specifically developed for use in Westinghouse-designed three- and four-loop nuclear reactors. The fuel assembly maintains the same interface compatibility and many of the reactor-proven features of the Mark-BW fuel (Reference 2). Figure 3.1 highlights the primary design features of the Advanced Mark-BW fuel assembly. Table 3.1 provides a comparison of Advanced Mark-BW and standard Mark-BW fuel assembly parameters.

3.1 *Fuel Assembly*

The Advanced Mark-BW is an improved 17x17 fuel assembly designed specifically for Westinghouse-designed PWRs and utilizing many proven features of the Mark-BW design.

The Advanced Mark-BW fuel assembly utilizes 11 spacer grids that, with the 24 guide thimbles, instrument tube, and top and bottom nozzles, provide the structural cage for the 264 fuel rod assemblies. The top and bottom end grids are made from Inconel 718 strip material. The six intermediate grids and three MSMGs are constructed from M5 strip material. The intermediate grids are those between the end grids, not including the MSMGs. The M5 clad fuel rods rest on the bottom nozzle and are laterally supported by the top and bottom end spacer grids and six intermediate spacer grids.

The Advanced Mark-BW intermediate spacer grids are not mechanically attached to the guide thimbles, which allow the grids to "float" and accommodate any axial differential growth between the fuel rods and guide thimbles. Ferrules around 8 of the 24 guide thimbles are designed to limit the axial displacement of the intermediate grids. The axial location of the spacer grids remains unchanged from previous Mark-BW designs. This arrangement reduces the axial forces on the guide thimbles and fuel rods, and the resultant forces on the spacer grids. In addition, guide thimble axial loads are reduced, given that the weight of the fuel rods passes directly to the bottom nozzle.

The Advanced Mark-BW spacer grid design utilizes hardstops/softstops in the cells to support the fuel rod. The fuel assembly fabrication process utilizes grid keying to prevent scratching or other damage to the fuel rod cladding. Advanced Mark-BW end and intermediate grids maintain the same grid periphery lead-in features as used in the Mark-BW design to ensure good fuel assembly-handling performance.

Features on the guide thimble assemblies constrain axial motion of the end grids. The bottom end grid is restrained through stainless steel sleeves that are welded to the bottom end grid. The grid sleeves are mechanically crimped to the guide thimble lower end plugs that are fixed to the bottom nozzle. Top end grid motion is restrained by stainless steel spacer sleeves that are welded to the top end grid and located on the guide thimbles between the bottom of the top nozzle and the top of the top end grid.

A QD mechanism is utilized on the Advanced Mark-BW fuel assembly. The attachments at the guide thimble/top nozzle interface allow the top nozzle to be removed for fuel assembly reconstitution. The Mark-BW leaf spring design, consisting of four sets of leaf springs made of Inconel 718 material, is also utilized on the Advanced Mark-BW assembly. Located in the top nozzle, the spring maintains positive fuel assembly contact with the core support structure under all normal operating conditions; it also maintains positive holddown margin for the Advanced Mark-BW hydraulic forces.

The bottom nozzle is the "TRAPPER™*" debris filter bottom nozzle used on the standard Mark-BW fuel assembly.

All key dimensions are maintained to ensure compatibility with existing interfaces. The dimensions presented are current values, which are subject to change for optimization as additional operating data are acquired while ensuring that all design bases are met.

3.2 *Fuel Rod*

The Advanced Mark-BW fuel rod assembly utilizes the M5 alloy. The use of the M5 alloy was previously approved in Reference 3. The M5 cladding significantly increases resistance to corrosion associated with longer cycles, high temperatures, and high burnup. The Advanced Mark-BW fuel rod length is slightly longer to improve pin pressure margins. The fuel rod length is a function of the reactor design and may vary from plant to plant. Table 3.2 provides a comparison of Advanced Mark-BW and standard Mark-BW fuel rod parameters. The schematic diagram of Figure 3.2 shows an axial cross section of the Advanced Mark-BW fuel rod.

---

* TRAPPER is a trademark of Framatome ANP.

The fuel rod design consists of uranium dioxide (UO_2) pellets contained in a seamless M5 tube, with M5 end caps welded at each end. The design utilizes a 144-inch fuel stack length. The fuel pellets have a diameter of 0.3225 inch. The fuel rod cladding has a 0.374-inch outside diameter (OD) and a 0.0225-inch wall thickness. This configuration leaves a small clearance (approximately 0.003-inch radial clearance) between the inside diameter (ID) of the cladding and the OD of the fuel pellets. The fuel rod utilizes one stainless steel spring in the upper plenum to prevent the formation of fuel stack gaps during shipping and handling, while also allowing for the expansion of the fuel stack during operation. The fuel stack rests on the lower end cap. The lower end cap is made from M5 and has a bullet-nose shape to provide a smooth flow transition, in addition to facilitating reinsertion of the rods into the assembly if any rods are removed after the assemblies have been irradiated (e.g., during fuel examination programs). The upper end cap is also made of M5 and has a grippable top-hat shape that allows for the removal of the fuel rods from the fuel assembly, if necessary. The upper end cap has a hole to permit evacuation and back-filling of the fuel rod with helium gas prior to re-sealing.

The fuel pellets are a sintered, high density ceramic. The fuel pellets are cylindrically shaped with a dish at each end. The corners of the pellets have an outward land taper (chamfer) that eases the loading of the pellets into the cladding. The dish and taper geometry also reduces the tendency for the pellets to assume an hourglass shape during operation. The present design density of the pellets is [ ]% theoretical density (TD) that may increase as pellet fabrication improvements occur. Pellet enrichments may be as high as 5.0 w/o U-235.

The Advanced Mark-BW fuel rod design can also utilize axial blanket and gadolinia fuel configurations similar to the standard Mark-BW design. The axial blanket fuel stack contains three zones: a central portion of enriched sintered UO_2 pellets and an axial blanket region at each end of the stack. The axial blanket region consists of sintered UO_2 pellets with a U^{235} enrichment of a low weight percent. The fuel pellet may also utilize gadolinium, which serves as a poison to control peaking. The fuel rod dimensions presented are current and subject to change for optimization as additional operating data are acquired, while ensuring that all design bases are met.

3.3 *Intermediate Grids*

The Advanced Mark-BW spacer grids are a direct evolution of Mark-BW spacer grids. The Advanced Mark-BW grids use the M5 alloy to improve corrosion resistance and reduce

irradiation growth. The use of the M5 alloy for spacer grids was previously approved in Reference 3. Table 3.3 provides a comparison of Advanced Mark-BW and standard Mark-BW spacer grid parameters.

Figure 3.3 and Figure 3.4 illustrate the Advanced Mark-BW flow-mixing intermediate and end spacer grid assemblies, respectively.

Figure 3.5 and Figure 3.6 illustrate the various features press-formed into the strip. For a given fuel rod cell, a combination of springs (softstops) and dimples (hardstops) acting in two orthogonal planes support each rod. All spring and dimple edges are coined to avoid scratching of fuel rods during loading. Tight control of dimple and spring heights ensures a constant, uniform rod pitch and fuel rod restraint load.

Each guide and instrumentation thimble cell features saddles and scallops facilitating loading and support of the thimbles. A weld, performed at each strip intersection on both faces of the assembled grid, secures the strips. Grid strip height and thickness are optimized to meet crush and impact strength, pressure drop, and geometry requirements.

The Advanced Mark-BW fuel assemblies may utilize two types of intermediate spacer grid assemblies: vaned and vaneless. Intermediate vaned (mixing) grids are used in the high-heat flux region of the fuel assembly to promote mixing of the coolant. The vaned grid incorporates mixing vanes in the strip, projecting from the trailing (upper) edges into the coolant stream with the typical pattern shown in Figure 3.7.

The Advanced Mark-BW outer strip design of the intermediate and end grids, as shown in Figure 3.3, Figure 3.4, and Figure 3.5, incorporates many handling enhancement features, which include:

- Welded, reinforced guide vane
- Dimpled, reinforced outer strip
- Column-structured corner

To ensure axial alignment of spacer grids with adjacent fuel assemblies, the design incorporates stops on selected guide thimbles that limit grid axial movement after irradiation relaxation of the zirconium alloy grids. Figure 3.8 shows the stops, which are short sleeves, or ferrules, attached to the guide thimble above each intermediate grid. Figure 3.8 also illustrates the eight guide

thimble locations, in addition to the center cell, used for the intermediate grid restraint system. The sleeve below the grid on the instrument sheath is attached with two sets of swages or dimples to provide enough strength to prevent the grid from moving downward during fuel assembly handling. Figure 3.9 and Figure 3.10 show the top and bottom end grid restraint designs, respectively. Short stainless steel sleeves are attached to weld tabs employed at the guide thimble locations on the top of the upper end grid strips and the bottom of the lower end grid strips.

The top end grid sleeves seat against the bottom surface of the QD sleeve. The QD sleeves restrain the grid as the fuel rods slip through due to irradiation growth.

For the bottom end grid connection, mechanical crimping of the end grid sleeves into circular grooves in the guide thimble bottom end plugs attaches the grid to the guide thimble assembly.

The end grids use low cobalt, precipitation-hardened Inconel 718. This material ensures proper grip of the fuel rod through the design burnup range.

The Advanced Mark-BW intermediate and end grids incorporate keying windows (see Figure 3.5) that allow 100% of the fuel rod cells to be opened, or "keyed," during fuel rod insertion. The keying process comprises thin keys, inserted through the keying windows, which are rotated to restrain the softstop springs. This process is utilized to minimize fuel rod scratches, cell hardstop/softstop damage, and fuel assembly residual stresses. The keys are removed after fuel rod insertion to restore the grid's grip force on the fuel rods.

3.4 *Low Pressure Drop Top Nozzle*

The Advanced Mark-BW fuel assembly design incorporates a QD top nozzle assembly, as shown in Figure 3.14. The primary features of the Advanced Mark-BW top nozzle assembly include:

- Leaf spring holddown system
- Low pressure drop nozzle structure
- QD guide thimble attachment features

The QD guide thimble attachment features are unique to the Advanced Mark-BW. All other features are common to the standard Mark-BW design. A representative QD guide thimble assembly is shown in Figure 3.13. The design consists of a double-spline sleeve made of 304L

stainless steel attached to the guide thimble via a double swage. The interaction of the nozzle's machining features, QD ring splines, and QD sleeve splines keeps the locking ring contained within the top nozzle. The reconstitution tooling, designed to rotate the QD ring 90° to lock or unlock the sleeve splines, provides a positive lock when the ring rotation is complete.

The top nozzle assembly incorporates four sets of leaf springs made of Inconel 718 alloy fastened to the nozzle with Inconel 718 clamp screws. During operation, the springs prevent fuel assembly lift due to hydraulic forces. The upper leaf has an extended tang that engages a cutout in the top plate of the nozzle. This arrangement assures spring leaf retention in the unlikely event of a spring leaf or clamp screw failure.

The top nozzle structure consists of a stainless steel frame that provides for the interfaces with the reactor internals and the core components while providing for coolant flow. The top nozzle flow-hole pattern provides increased flow area compared to traditional designs, yielding a reduced pressure drop while satisfying the same strength requirements.

3.5 *Debris Filter (TRAPPER) Bottom Nozzle*

The TRAPPER bottom nozzle, shown in Figure 3.15 and Figure 3.16, provides a highly effective barrier to debris for the Mark-BW and Advanced Mark-BW fuel.

The stainless steel nozzle consists of a frame of deep ribs connecting the guide thimble locations and conventional legs that interface with the reactor internals. The frame distributes the primary loads on the fuel assembly through the bottom nozzle. A high-strength stainless steel alloy filter plate, as shown in Figure 3.17 and Figure 3.18, is attached to the top of the frame. The filter plate may be a coarse or fine flow-hole configuration. Upon skeleton assembly, the guide thimble lower end plugs serve to clamp the filter plate to the structural frame at internal locations. The filter plate serves two functions: It provides the seating surface for the fuel rods by distributing these loads to the structural frame, and it provides a very effective barrier to debris with acceptable pressure drop. The pressure drop performance is equivalent to that of conventional debris filter designs.

3.6 *M5 Alloy Guide Thimble and Instrument Sheath Tubing*

The guide thimble and instrument sheath tubing are fabricated from M5 alloy. The use of the M5 alloy for guide thimble and instrument sheath tubing was previously approved in

Reference 3. This material exhibits very low rates of irradiation growth and corrosion throughout the fuel design burnup ranges. Table 3.4 provides a comparison of Advanced Mark-BW and standard Mark-BW guide thimble and instrument sheath parameters.

The guide thimble and instrument sheath designs are common to the standard Mark-BW design. The guide thimble, shown in Figure 3.13, has two inner diameters. The larger diameter at the top provides a relatively large annular clearance that permits rapid insertion of the rod cluster control assembly (RCCA) during a reactor trip and accommodates coolant flow during normal operation. The reduced diameter section, the dashpot (located at the lower end of the tube), provides a relatively close fit with the control rods to decelerate the control rods near the end of the control rod travel. This deceleration limits the magnitude of the RCCA impact loads on the top nozzle.

Four (4) small holes located just above the dashpot allow both outflow of the water during RCCA insertion and coolant flow to control components during operation. The small flow hole in the guide thimble bolt provides flow through the reduced diameter section.

The QD sleeve is attached to the upper end of the guide thimble tube for connection to the top nozzle (see Section 3.4). An M5 lower end plug is welded onto the end of the guide thimble dashpot section. The lower end plug is internally threaded for engagement with the guide thimble bolt that connects the guide thimble to the bottom nozzle.

The instrument sheath is a uniform diameter tube located in the center lattice of the fuel assembly that extends the length of the fuel and is fixed to the bottom nozzle by a mechanical crimp.

3.7 *Materials*

Table 3.5 summarizes the materials utilized on the Advanced Mark-BW design, identifying the alloys and the corresponding components. All materials listed have also been implemented in the Mark-BW design. The specific use of M5 for fuel rod, cladding, guide thimbles, and spacer grids has been approved by the NRC per Reference 3.

3.8 *Mid-Span Mixing Grids (MSMGs)*

Figure 3.11 and Figure 3.12 illustrate the primary features of the Advanced Mark-BW MSMG assemblies. Three (3) MSMGs are incorporated onto each fuel assembly, one (1) at each

mid-span between the upper four (4) intermediate vaned grids. The MSMGs provide additional flow mixing in the high-heat flux region for improved performance and DNB margin. The MSMGs also provide additional structural rigidity to lateral loadings.

The MSMGs are attached to the guide thimbles at the sixteen (16) outer guide thimble locations shown in Figure 3.8 and Figure 3.11. These guide thimble locations are different than the eight (8) restraining guide thimble locations for the floating intermediate grids in order to help distribute the hydraulic loads. The MSMGs are rigidly attached to the guide thimbles since they are non-contacting (i.e., no axial support of the fuel rods). The MSMG attachment is a mechanical swage of the M5 sleeve that is welded to the grid and the guide thimble.

Constructed from M5, the individual MSMG strips are slotted and assembled in an egg-crate fashion and welded at each of the grid strip intersections, the same as for the intermediate grid design. Stops formed in each of the four cell walls prevent the fuel rods from contacting the mixing vanes but impose no grip force (or slip load) onto the rods; thus, these are designated "non-contacting" grids. The outer strips incorporate a wrap-around corner design to improve the handling interface.

To minimize the effect of the MSMGs on bundle pressure drop and to limit the additional material added within the active fuel region, the grids are made from strips that are thinner and shorter than those of the intermediate grids. The outer strip design precludes hang-up or damage during handling due to its large lead-in feature. A reduced grid envelope eliminates mechanical interaction with adjacent fuel assemblies during transition fuel cycles.

The MSMGs use the same mixing vane design and pattern as utilized on the Advanced Mark-BW intermediate vaned grid. The DNBR correlation for the Advanced Mark-BW fuel assembly is described in References 5, 6, and 7.

Table 3.1 Comparison of Advanced Mark-BW and Mark-BW Fuel Assembly Parameters

Fuel Assembly Parameter	Mark-BW	Advanced Mark-BW
Fuel Assembly Overall Length, in	159.76	159.85
Fuel Rod Overall Length, in	151.80	152.16
Fuel Assembly Envelope, in	8.425	8.425
Fuel Rod Pitch, in	0.496	0.496
Fuel Rods / Assembly	264	264
Guide Thimbles / Assembly	24	24
Instrument Tubes / Assembly	1	1
Top Nozzle	Low pressure drop or standard Multi-leaf spring	Low pressure drop Multi-leaf spring
Top Nozzle Attachment	Locking cup/screwed connection	QD
Trapper Bottom Nozzle	Coarse mesh or fine mesh	Coarse mesh or fine mesh
End Grids	2 monometallic Inconel 718	2 monometallic Inconel 718
Intermediate Grids	6 monometallic recrystallized annealed (RXA) Zircaloy-4 or M5	6 monometallic M5
Intermediate Grid Types	5 Mixing, 1 Non-mixing	5 Mixing, 1 Non-mixing
Intermediate Grid / Guide Thimble Attachment	Swaged, deflection limiting ferrules with initial gap, 8 guide thimble locations	Swaged, deflection limiting ferrules with initial gap, 8 guide thimble locations
MSMGs	N/A	3 monometallic M5
MSMGs/Guide Thimble Attachment	N/A	Mechanical swage, 16 guide thimble locations

Table 3.2 Comparison of Advanced Mark-BW and Mark-BW Fuel Rod Parameters

Fuel Rod Parameters	Mark-BW	Advanced Mark-BW
Clad Material	SRA Zircaloy-4 or M5 Alloy	M5 Alloy
Fuel Rod Length, in	151.80	152.16
Cladding OD, in	0.374	0.374
Cladding Thickness, in	0.024	0.0225
Cladding ID, in	0.326	0.329
Clad-to-Pellet Gap, in	0.0065	0.0065
Fuel Pellet OD, in	0.3195	0.3225
Plenum Springs	Top and Bottom	Top

Table 3.3 Comparison of Advanced Mark-BW and Mark-BW Grid Parameters

Grid Parameter	Mark-BW	Advanced Mark-BW
Intermediate Grid		
Material	Fully annealed recrystallized low-tin Zircaloy-4 or M5 Alloy	M5 Alloy
Mixing Vanes	Upper 5 grids	Upper 5 grids
Outer Strip Height, in	[ ]	[ ]
Outer Strip Thickness, in	[ ]	[ ]
Inner Strip Height, in	[ ]	[ ]
Inner Strip Thickness, in	[ ]	[ ]
Grid Envelope, in	8.417	8.417
Effective Cell Size, in	[ ]	[ ]
End Grid		
Material	Inconel 718	Inconel 718
Outer Strip Height, in	[ ]	[ ]
Outer Strip Thickness, in	[ ]	[ ]
Inner Strip Height, in	[ ]	[ ]
Inner Strip Thickness, in	[ ]	[ ]
Grid Envelope, in	8.425	8.425
Effective Cell Size, in	[ ]	[ ]
MSMG		
Material	N/A	M5 Alloy
Location	N/A	Top 3 intermediate grid spans
Outer Strip Height, in	N/A	[ ]
Outer Strip Thickness, in	N/A	[ ]
Inner Strip Height, in	N/A	[ ]
Inner Strip Thickness, in	N/A	[ ]
Grid Envelope, in	N/A	[ ]
Effective Cell Size, in	N/A	[ ]

Table 3.4 Comparison of Advanced Mark-BW and Mark-BW Guide Thimble and Instrument Sheath Parameters

Parameters	Mark-BW	Advanced Mark-BW
Guide Thimble Parameters		
Tube Material	M5 Alloy or RXA Zircaloy-4	M5 Alloy
OD (top), in	0.482	0.482
OD (bottom, dashpot), in	0.450	0.450
ID (top), in	0.429	0.429
ID (bottom, dashpot), in	0.397	0.397
Wall thickness (top and bottom), in	0.016	0.016
Instrument Tube Parameters		
Material	RXA Zircaloy-4 or M5	M5
OD, in	0.482	0.482
ID, in	0.450	0.450

Table 3.5 Summary of Component Materials

Alloy	Component
M5	Fuel rod clad, guide thimble, instrument sheath
	Guide thimble ferrules
	Fuel rod end caps, guide thimble plugs
	Intermediate grids and MSMGs
304L S.S.	Top/Bottom nozzle structures
	Guide thimble bolt, filter plate pins
	Lockwire
	Sleeves
316L S.S.	Quick-disconnect sleeve
302/304 S.S.	Fuel rod spring
A-286 S.S.	Filter plate
Nickel Alloy 718	End grids
	Clamp screws
	QD ring
	Holddown spring leaves
UO_2 and $UO_2 + Gd_2O_3$	Fuel pellets

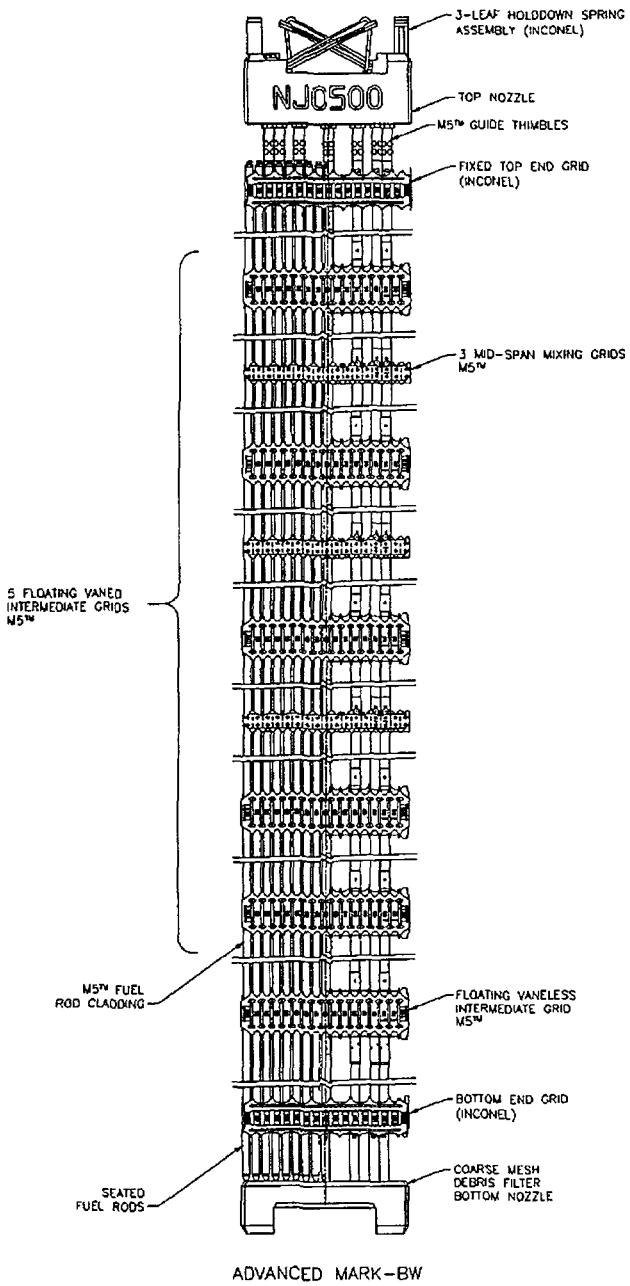

Figure 3.1 Advanced Mark-BW Fuel Assembly

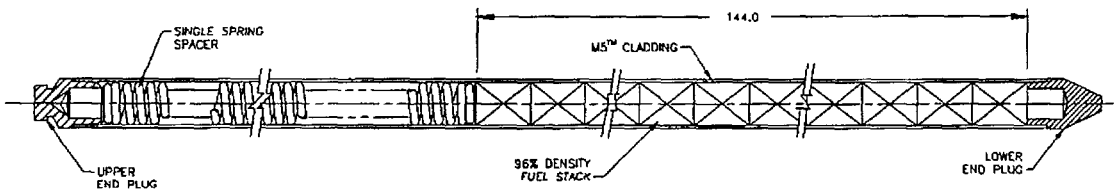

Figure 3.2 Fuel Rod Assembly

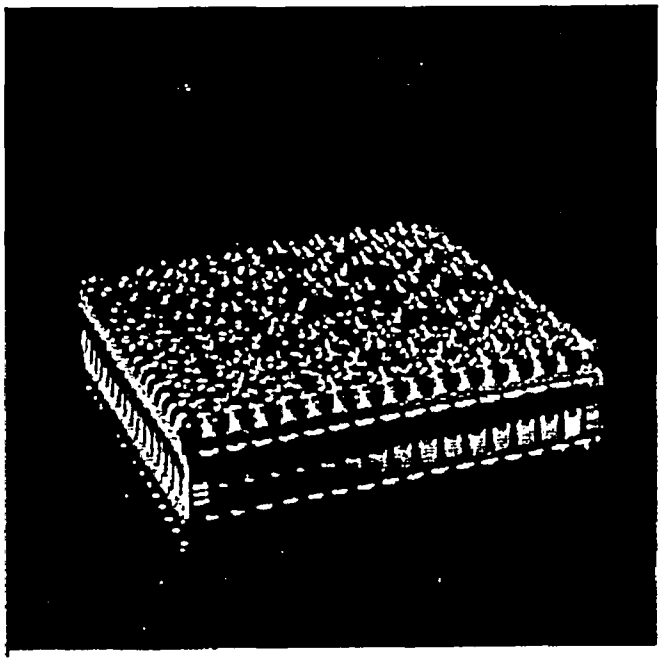

Figure 3.3 Intermediate-Vaned Spacer Grid Assembly

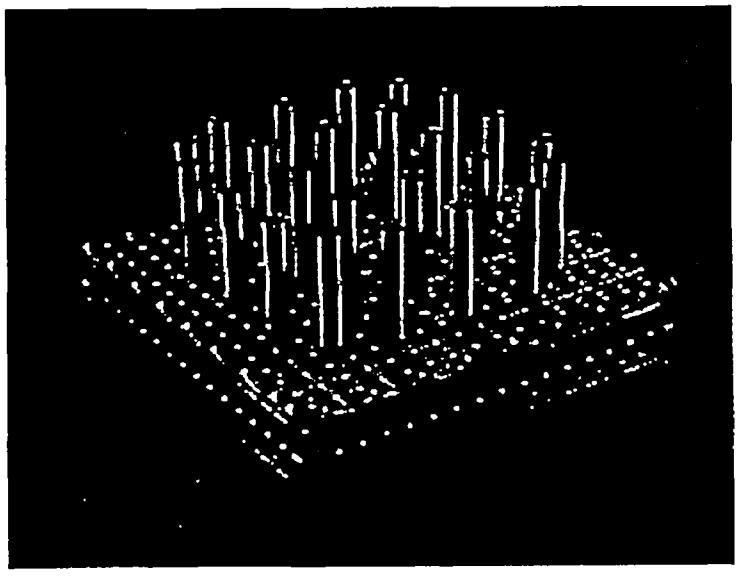

Figure 3.4 End Grid Assembly

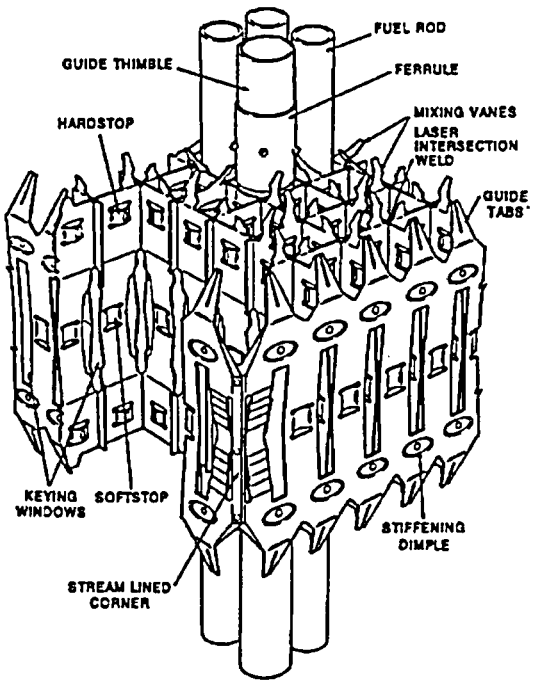

Figure 3.5 Intermediate Spacer Grid Features

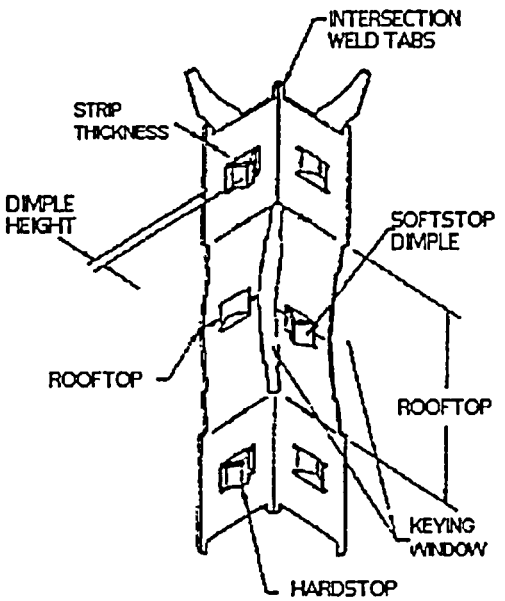

Figure 3.6 Inner Grid Strip Features

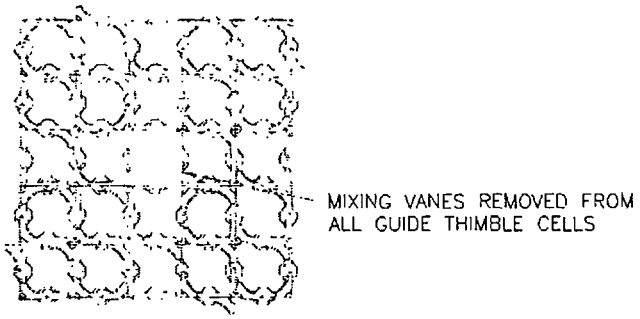

Figure 3.7 Mixing Vane Pattern

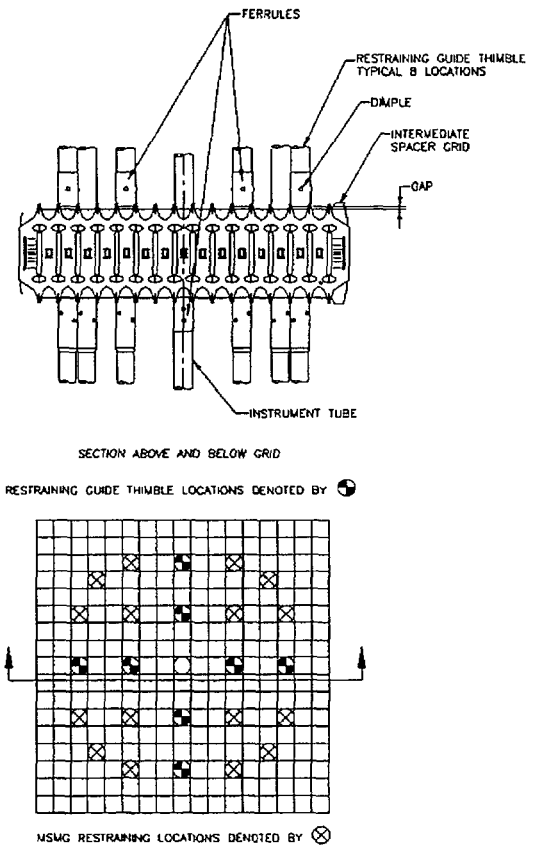

Figure 3.8 Intermediate Spacer Grid Restraint System

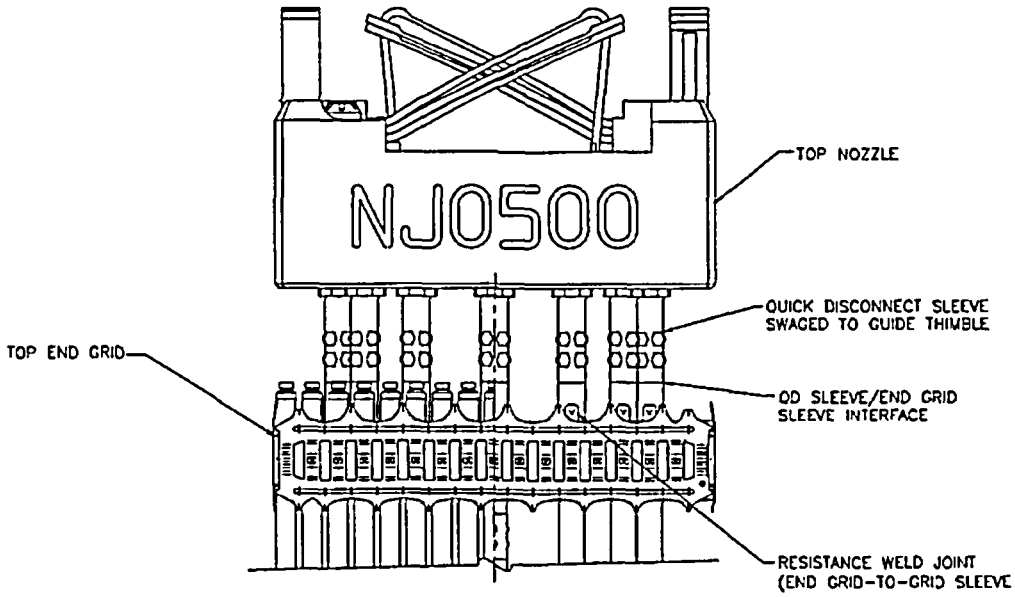

Figure 3.9 Top End Grid Restraint

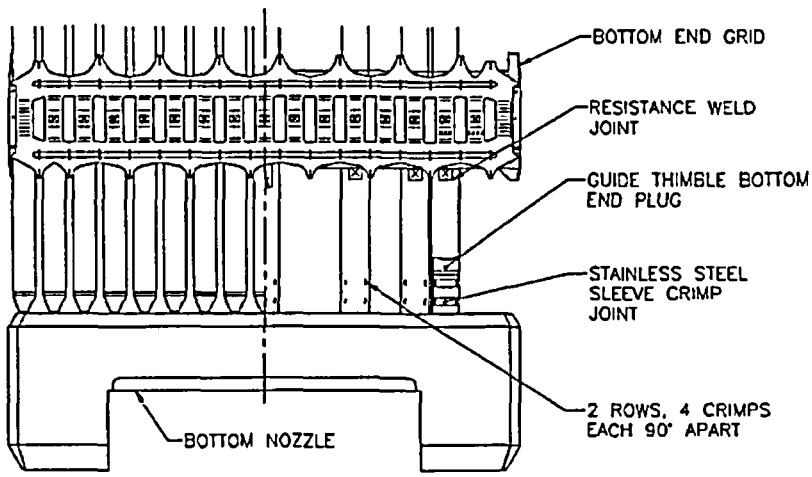

Figure 3.10 Bottom End Grid Restraint

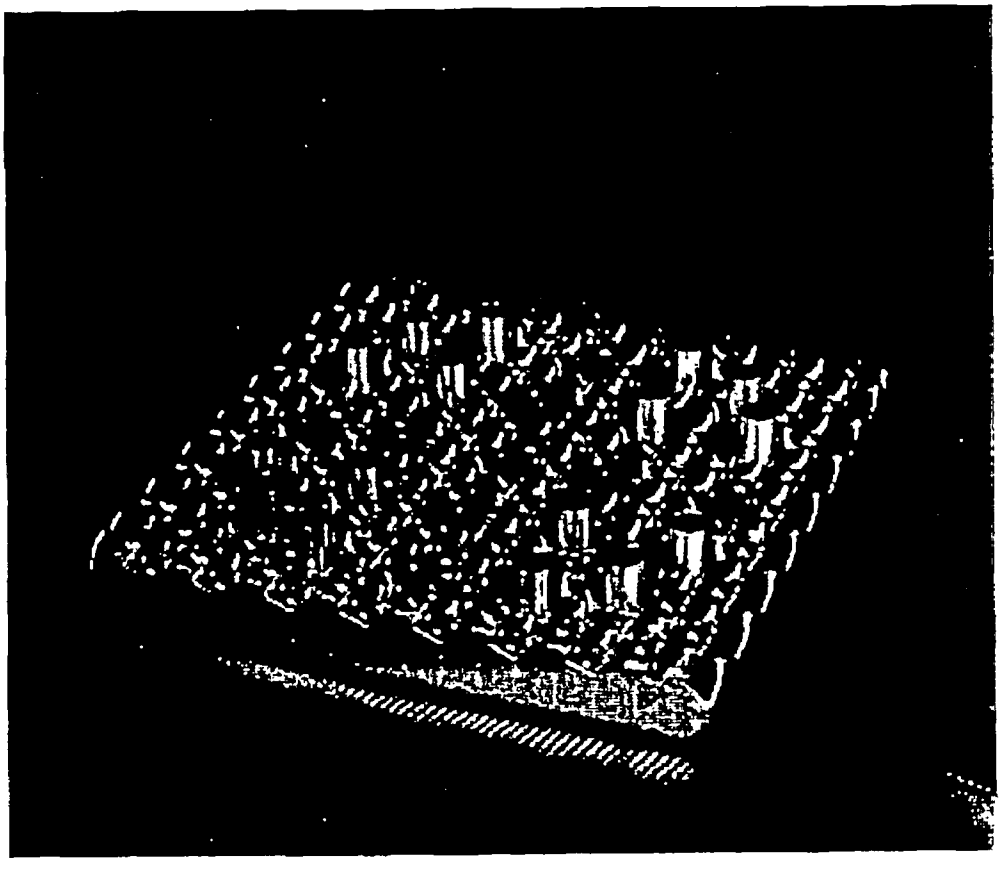

Figure 3.11 Mid-Span Mixing Grid

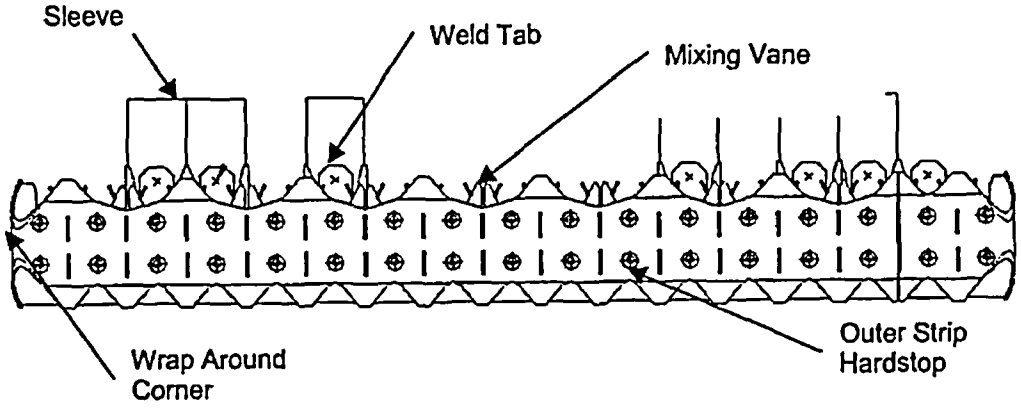

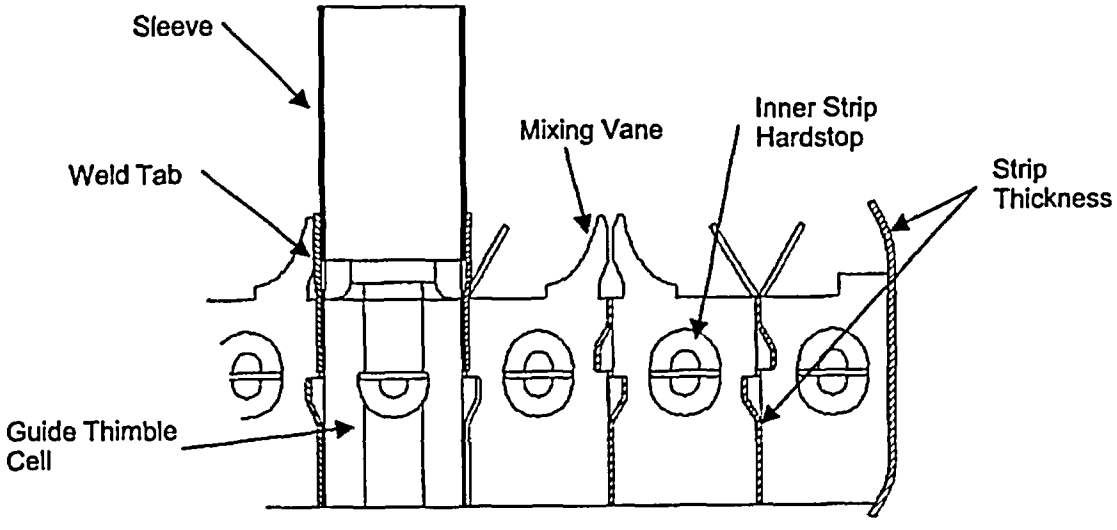

Figure 3.12 Mid-Span Mixing Grid Details

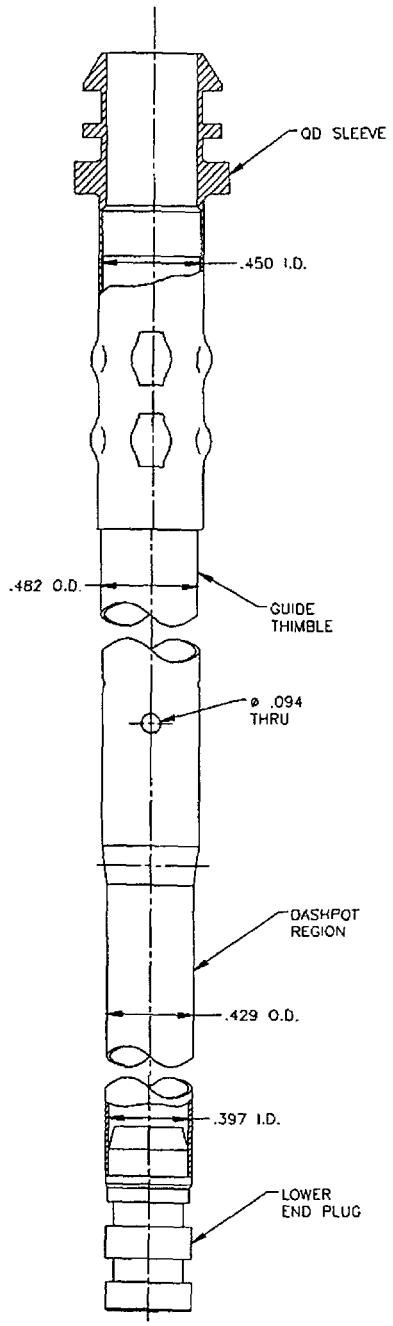

Figure 3.13 Guide Thimble Assembly

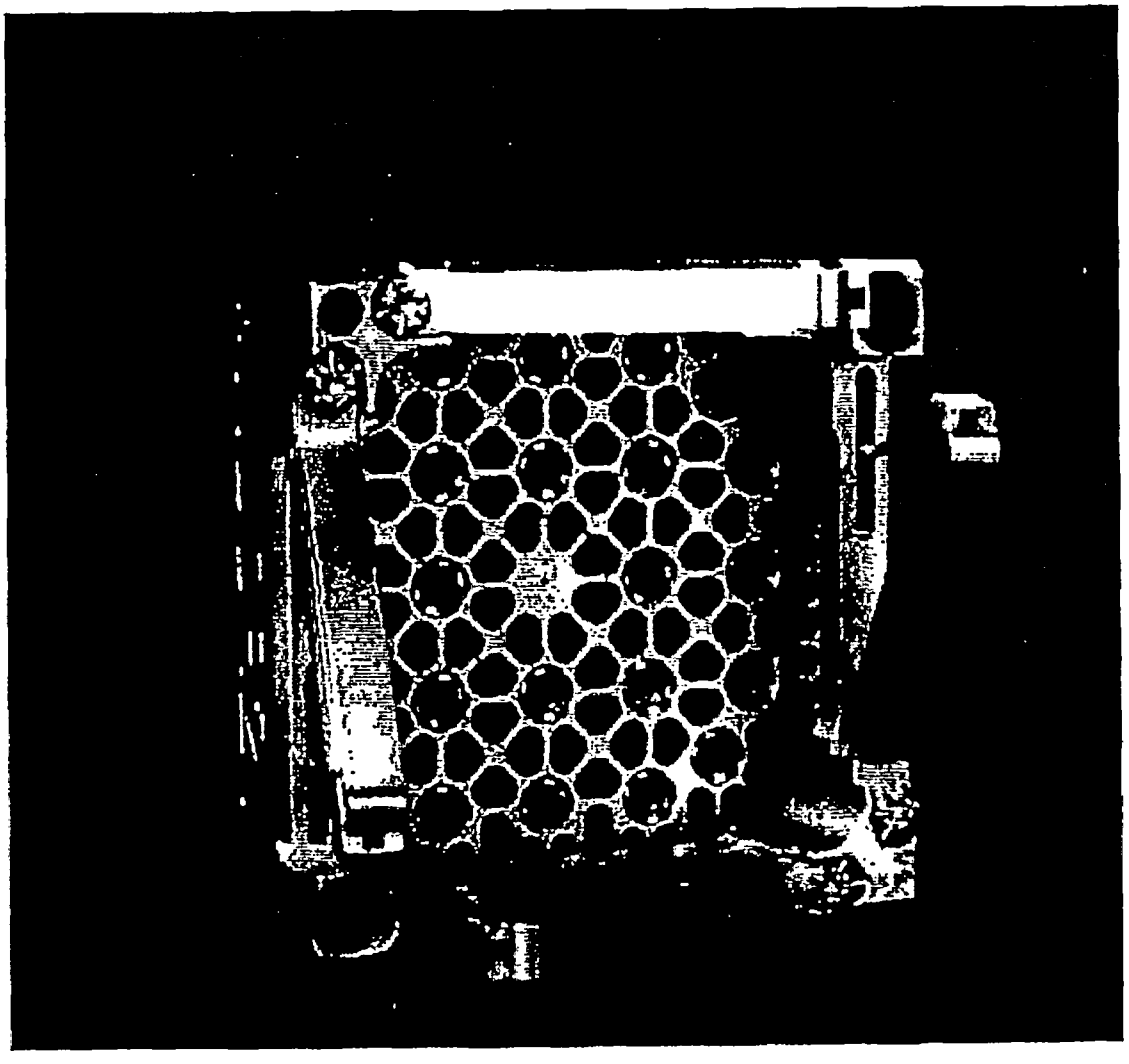

Figure 3.14 QD Top Nozzle Assembly

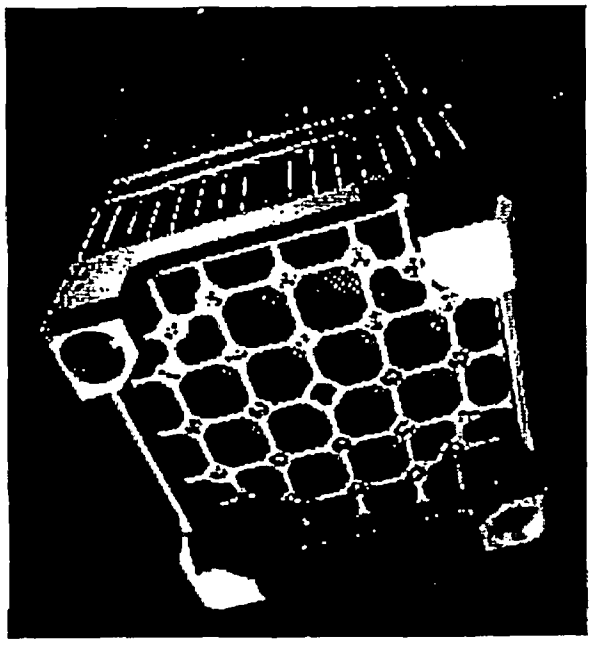

Figure 3.15 Debris Filter Bottom Nozzle - Installed

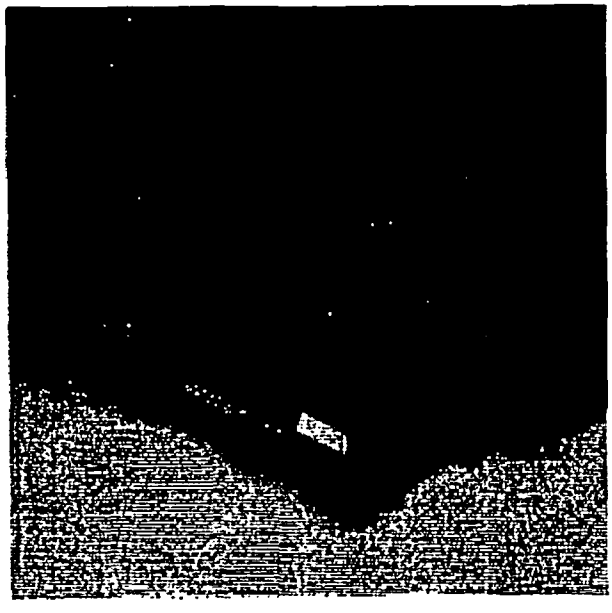

Figure 3.16 Debris Filter Bottom Nozzle Structure

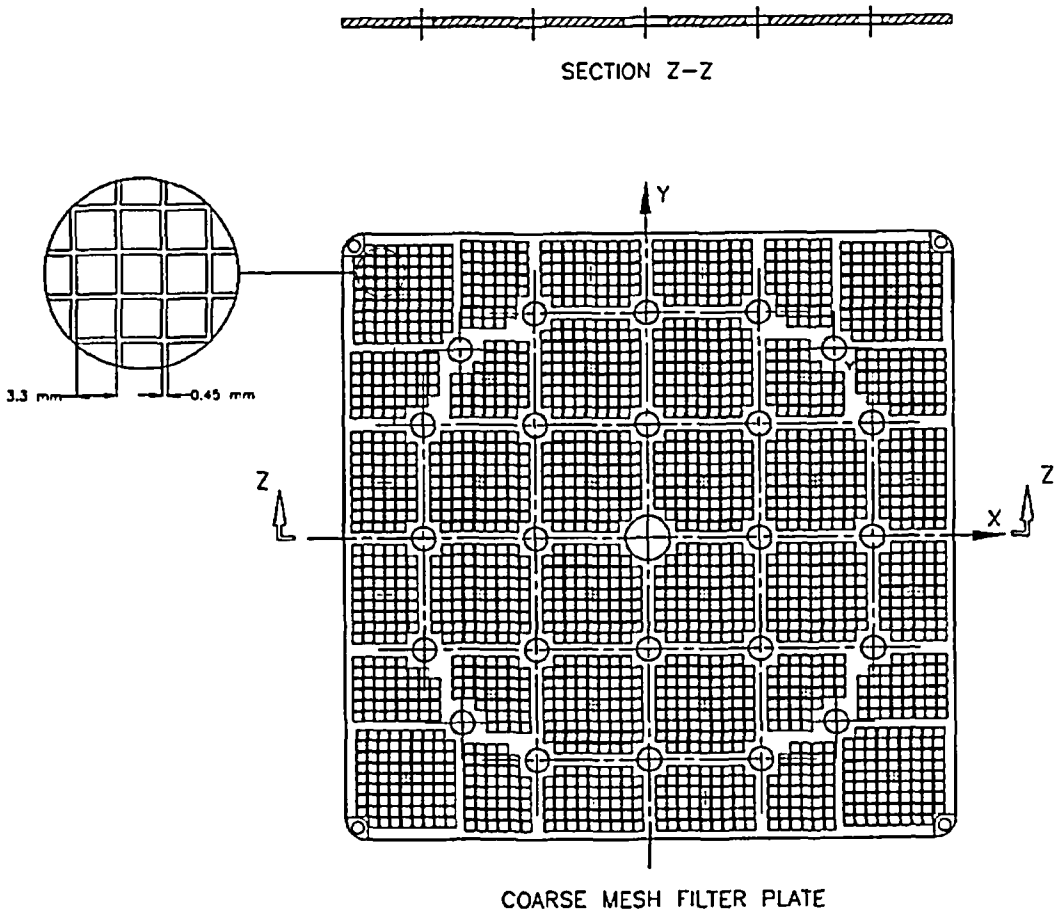

Figure 3.17 Coarse Mesh Filter Plate Ligament Geometry

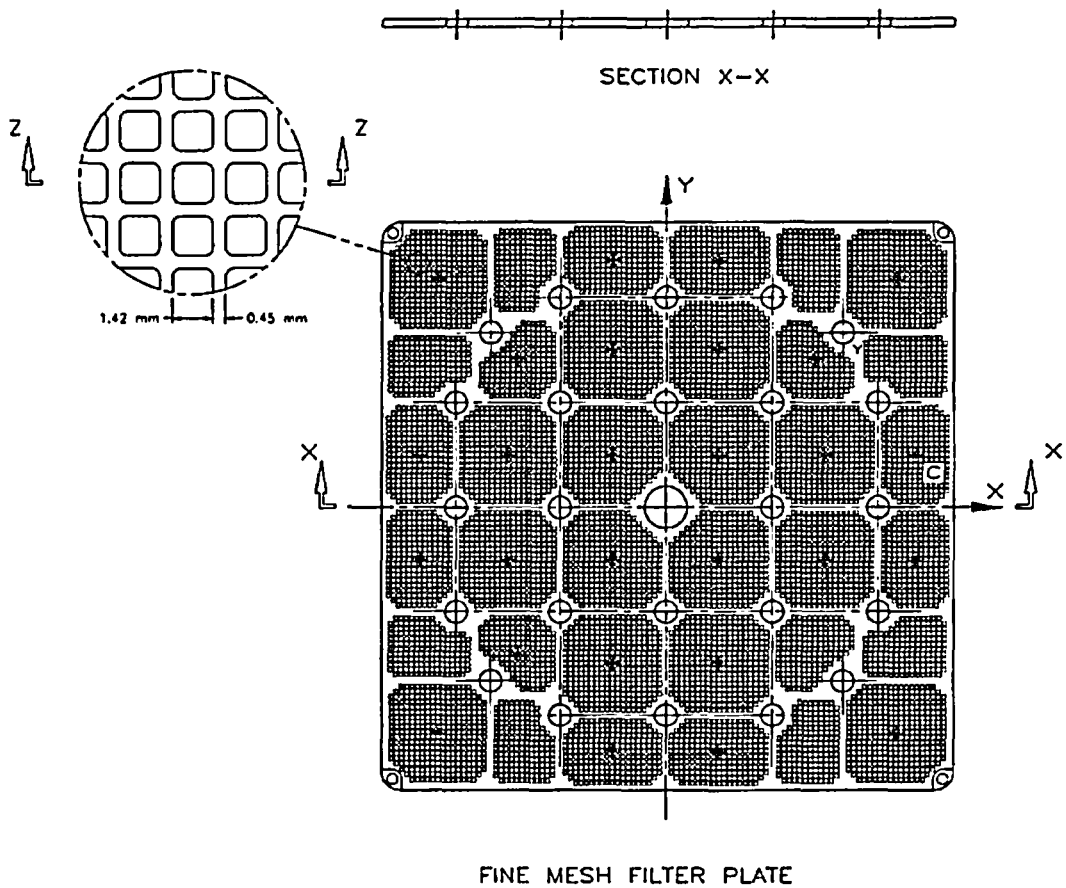

Figure 3.18 Fine-Mesh Filter Plate Ligament Geometry

4.0 LTA Program

The Advanced Mark-BW program was a cooperative effort with Dominion Generation to thoroughly test the design prior to batch implementation. Four "Mark-BW/X1" LTAs were inserted in the core of Dominion Generation's North Anna Unit 1 in 1997. The LTAs successfully completed three (3) cycles of operation with leaker-free performance with a peak pin burnup of ~57 GWd/MTU. One of the LTAs is tentatively slated for continued irradiation in North Anna Unit 2 beginning in 2002. Plans are being developed to place the LTA in the center position for a fourth cycle and to operate to ~73 GWd/MTU, peak pin burnup.

Table 4.1 summarizes the LTA core operation history for three (3) irradiation cycles. Figure 4.1 provides the core locations and corresponding maximum fuel rod burnup for the LTAs for each irradiation cycle. The LTAs were operated for two cycles in near-peak power core conditions and for the third cycle on the core periphery. The core periphery is known to create a hostile hydraulic environment. In-mast sipping during the fuel off-load confirmed that all LTAs were leaker-free following the third irradiation cycle. RCCA trip data were obtained prior to the second irradiation cycle in which the LTAs operated in RCCA locations. RCCA trip times to dashpot entry ranged from 1.66 to 1.70 seconds, which were well below the Technical Specification limit of 2.2 seconds. In addition, no LTA handling or operational problems occurred.

The Mark-BW/X1 LTAs used M5 alloy as the material for fuel rod cladding and guide thimbles, with the exception of 2 assemblies that had 16 peripheral rods fabricated with the M4 alloy. The Advanced M4 and M5 cladding provide significant improvements in oxidation, hydrogen pickup and absorption, axial growth, and creep compared to the low-tin Zircaloy-4. The Mark-BW/X1 LTAs used fully recrystallized annealed (RXA) Zircaloy-4 intermediate and MSMGs since M5 strip material was unavailable at the outset of the LTA program. Two of the four LTAs had floating upper end grid connections in lieu of the standard fixed upper end grid.

A post-irradiation examination (PIE) was performed at the end of each cycle to evaluate the LTA performance compared to the Framatome ANP fuel performance and M5 database. The following list summarizes the scope of inspections that were performed in the spent fuel pool at the end of fuel Cycles 13, 14, and 15. Inspections included:

- Visual
- Fuel assembly length
- Shoulder gap
- RCCA drag force
- Fuel assembly bow
- Spacer grid position
- Spacer grid width
- Holddown spring height
- Fuel rod oxide
- Guide tube oxide
- QD torque

Based on the PIE measurements, the in-core operation of the LTAs was as expected.

Table 4.1 Mark-BW/X1 LTA Core Operation History

North Anna 1 Core Cycle	LTA Fuel Cycle	Start Date M/D/Year	End Date M/D/Year	Cycle Length EFPD	LTA Fuel Pin Peak Burnup (MWd/MTU)	LTA Fuel Assembly Burnup (MWd/MTU)
13	1	6/10/1997	9/13/1998	452.0	24115	22424
14	2	10/7/1998	3/12/2000	508.6	48096	46389
15	3	4/7/2000	9/9/2001	510[a]	56644[a]	52650[a]

[a] End-of-cycle 3 cycle length and burnup values are estimated values

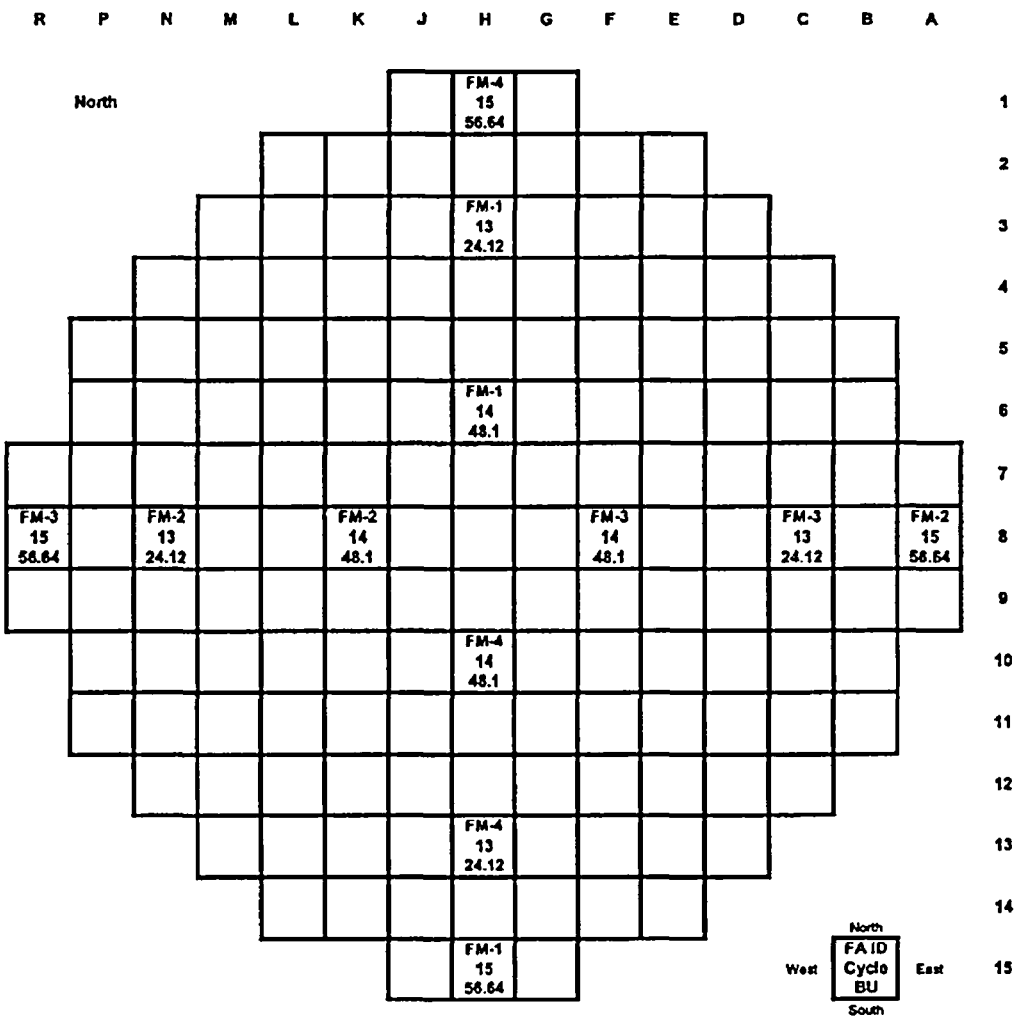

Figure 4.1 Mark-BW/X1 LTA Core Positions

5.0 Design Evaluation

This section presents an example design evaluation to ensure the Advanced Mark-BW fuel assembly design meets all applicable criteria to maintain safe plant operation. The mechanical analysis demonstrates that the fuel assembly satisfies the requirements outlined in Section 4.2 of the SRP, NUREG-0800 (Reference 1).

Methodologies and models specific to the M5 application are provided in Reference 3. Methodologies for the fuel assembly faulted structural evaluations are described in References 8 and 9. Design bases follow those established for the standard Mark-BW fuel assembly in Reference 2. These topical reports have received NRC approval for referencing in licensing applications.

The design of the Advanced Mark-BW fuel assembly is such that it preserves the interface with resident fuel assemblies and all reactor internals and all equipment for normal handling. The Advanced Mark-BW is designed to preserve the original plant licensing bases for all reactor internal components.

The results of the analyses are applicable to fuel assembly operation in typical three- and four-loop Westinghouse-designed 17x17 fuel plants. The analyses were performed for a peak fuel rod burnup of 65,000 MWd/MTU. Plant-specific analyses will be performed for comparison to the same criteria defined in this topical report to confirm the acceptable performance for the Advanced Mark-BW fuel assembly for specific plants.

5.1 *Fuel System Damage Criteria*

5.1.1 Stress

Design Criterion:

> Stress intensities for Advanced Mark-BW fuel assembly components shall be less than the stress limits based on American Society of Mechanical Engineers (ASME) Code, Section III criteria.

Stress intensities were shown to be less than the stress limits based on ASME Code Section III criteria. Flow conditions ranging from the fourth pump startup at 85°F to pump overspeed at power conditions were considered. Beginning-of-life (BOL) and end-of-life (EOL) conditions

were also evaluated to consider the change in load paths and loads due to material relaxation. Table 5.1 provides a summary of the reactor coolant system design transients evaluated. The following fuel assembly components were evaluated:

- Guide thimble assembly
- Top and bottom nozzles
- Grids/Grid restraint
- QD
- Holddown spring assembly
- Instrument sheath
- Fuel rod cladding

Positive margins were determined for all fuel assembly structural components, showing that the Advanced Mark-BW fuel assembly is structurally adequate for normal operating conditions.

5.1.1.1 Guide Thimble Buckling

Design Criterion:

> Buckling of the guide thimbles shall not occur during normal operation (Condition I) or any other transient where control rod insertion is required. In addition, the primary and primary + secondary stresses shall be lower than the material allowable stresses (Reference 2).

The Advanced Mark-BW guide thimbles were shown not to buckle. Allowable guide thimble axial loads were determined per Reference 2, which limits the guide thimble span axial load based on mid-span deflection criteria (such as not to affect control rod insertion or trip performance). Guide thimble corrosion, tolerances, and temperature effects were considered. Positive margins to buckling were determined for all temperature and fuel assembly conditions.

Guide thimble buckling was analyzed for normal operating conditions, including mechanical design flow rate, pump over speed, and RCCA scram loading conditions.

Margins were calculated for the following load cases:

- 100% Full-power mechanical design flow rate
- 120% Full-power mechanical design flow rate (pump overspeed condition)
- 100% Full-power mechanical design flow rate with an upper bound scram load

For the first two cases, the margins were based on the load required to produce a mid-span deflection of [ ] inch using the secant formula. The mid-span lateral deflection of [ ] inch ensures no effect on the control rod insertion or trip performance. The margins for the scram load case were determined based on the maximum-allowable compressive yield stress of the guide thimble.

All margins were found to be acceptable.

5.1.1.2 Top and Bottom Nozzles

Design Criterion:

> The top and bottom nozzle design criterion is the same as that given in Reference 2, which is based on the ASME Boiler and Pressure Vessel (B&PV) Code, Section III limits and meets the requirements of Section 4.2 of the SRP (Reference 1).

Maximum holddown loads were applied in the analyses that correspond to the EOL shutdown condition at 85°F. Material properties used were based on the conservative operating condition temperature of 650°F. A conservative scram load was applied to the top nozzle, in addition to the holddown force. The weight of the fuel assembly was also included in the bottom nozzle analysis. The analyses of the nozzles, including the bottom nozzle filter plate, demonstrated positive margins for all normal operating loads.

5.1.1.3 Connections

Design Criterion:

> The design criterion of the fuel assembly connections is the same as that given in Reference 2, which is based on the ASME B&PV Code, Section III limits and meets the requirements of Section 4.2 of the SRP (Reference 1).

The evaluation showed that sufficient margin exists for all connections for normal operation and handling. The ferrule-to-guide thimble interface was tested to determine the stiffness and strength of the interface. Testing of the connection indicates that the dimple will provide adequate strength under all conditions. In addition, the ferrule dimpling process utilized in attaching the ferrules to the guide thimbles is a qualified procedure.

The guide thimble upper connections (such as the QD sleeve swage and the QD sleeve-to-end grid sleeve interface) and the guide thimble lower connections (such as the end grid sleeve-to-plug crimp and the guide thimble bolt) were verified through testing and/or analysis. Process qualifications are also performed for the weld, swage, and crimp-type connections to ensure repeatability.

5.1.1.4 Spacer Grids

Design Criterion:

> No grid crushing deformations occur for normal operation and Operational Base Earthquake (OBE) conditions. The grids shall also provide adequate support to maintain the fuel rods in a coolable configuration for all conditions (References 2 and 9).

The top and bottom Inconel end grids (EGs) are the same grids used for the standard Mark-BW fuel. The Advanced Mark-BW intermediate and mid-span mixing spacer grids (SGs) are made from M5. The mechanical design bases of the Advanced Mark-BW spacer grids were confirmed through a series of tests on Zircaloy-4 grids. These test results are applicable to the M5 grids, given the similarity in elastic modulus, strength, and ductility of the two materials. The Zircaloy-4 properties of the intermediate and mid-span mixing spacer grids were used in the structural analysis and are considered applicable and bounding. All testing (summarized below) indicates that the grids provide adequate design margins.

- **Dynamic Impact** (SG, MSMG) - The dynamic characteristics (impact force, impact duration, pre- and post-impact velocity, grid permanent deformation, dynamic stiffness, damping) were used as input properties for the analytical models of the fuel assembly, to establish allowable impact loads, and to characterize the plastic deformation of the grids. The impact test was also used to determine the value of grid deformation at which localized distortion of the guide thimble array affected insertion of a control rod cluster.
- **Static Crush** (SG, MSMG) - The static characteristics (static stiffness, elastic load limit) were used to establish allowable grid clamping loads during shipping.
- **Slip Load** (SG, EG) - The forces required to slip the grid relative to the fuel rods, guide thimbles, and instrument tube were measured for BOL and EOL (EG only) conditions. The EOL Inconel end grid fuel rod cells were intentionally oversized to reduce the interference with the fuel to simulate EOL conditions. Actual field data of EOL intermediate spacer grid slip loads were used. These data, which represent the friction force between the grids and fuel rods, were used as input in analytical models of the fuel assembly.

- **Handling** (SG, EG) - A full-scale Mark-BW prototype with six (6) Zircaloy-4 SG and two (2) Inconel EG was used to determine the insertion and withdrawal loads of the assembly. The prototype was fully inserted and withdrawn next to three (3) adjacent simulated fuel assemblies. The insertion/withdrawal force data were used to confirm the acceptable fuel handling characteristics of the Zircaloy-4 SG and Inconel EG. These results remain valid for the Mark-BW with MSMGs since the MSMGs have a reduced envelope to resist interface with adjacent assemblies. The fuel assembly handling performance was further verified by the Mark-BW/X1 LTA experience.
- **Corner Hang-up** (SG) - The grid corners have been designed (through the use of lead-in surfaces) to minimize the potential for grid hang-up. In addition, tests were conducted on the Zircaloy-4 intermediate spacer grid to determine the elastic load limit and failure mode of the corner cell (simulating grid hang-up). The elastic load limit was found to be [ ], with a minimum value of [ ]. More significantly, it was concluded that the failure mode of the corner was through weld fracture with very little outer strip and corner deformation. Given the similarities in material properties, the Zircaloy-4 test results are considered applicable for the M5 grids.

5.1.1.5 Cladding Stress

Design Criterion:

Fuel rod cladding stress shall not exceed stress limits established in Reference 3 and are provided below:

- Pm < 1.5 Sm in compression and < Sm in tension
- Pm + Pb < 1.5 Sm
- Pm + Pb + Pl < 1.5 Sm
- Pm + Pb + Pl + Q < 3.0 Sm

The types of stresses analyzed are as follows:

- **Pressure Stresses** - These are membrane stresses due to the external and internal pressure on the fuel rod cladding.
- **Flow Induced Vibration (FIV)** - These are longitudinal bending stresses due to vibration of the fuel rod. The vibration is caused by coolant flow around the fuel rod.
- **Ovality** - These are bending stresses due to external and internal pressure on the fuel rod cladding that is oval. This does not include the stresses resulting from creep ovalization into an axial gap.
- **Thermal Stresses** - These are secondary stresses that arise from the temperature gradient across the fuel rod during reactor operation.
- **Fuel Rod Growth Stresses** - These secondary stresses are due to the fuel rod slipping through the spacer grids. These may be due to the fuel assembly expanding more than the fuel rod due to heat-up, or they may be due to fuel rod growth from irradiation.

- **Three-point Grid Stop Stresses** - These are bending stresses due to the grid stop loads against the fuel rod cladding.
- **Fuel Rod Spacer Grid Interaction** - These are localized stresses due to contact between the fuel rod cladding and the spacer grid stops.

Classifications of stresses:

Loading Condition	Stress Category	
Pressure Stresses	Pm	Primary membrane
Ovality Stresses	Pb	Primary membrane bending
Spacer Grid Interaction	Pl	Primary membrane local
FIV	Pb	Primary membrane bending
Radial Thermal Expansion	Q	Secondary
Differential Rod Growth	Q	Secondary

The fuel rod cladding was analyzed for the stresses induced during operation using the approved methodology of Reference 3. Conservative values are used for cladding thickness, oxide layer buildup, external pressure, internal fuel rod pressure, differential temperature, and unirradiated cladding yield strength. The fuel rod stress analysis calculates the worst-case cladding stress state based on the thinnest clad wall and largest cladding ovality. The likelihood of the three conditions occurring at the same location on the cladding is remote. Therefore, the use of the two conditions together to calculate the cladding stress state is conservative. The analyses of the fuel rod clad stresses demonstrated positive margins for all operating conditions.

Advanced Mark-BW Fuel Rod Stress Result Summary – Example Case

Category	Limits	Stress Allowable (psi)	% Margin	
			Compressive	Tensile
Primary Membrane (Compressive)	1.5 Sm	[ ]	[ ]	[ ]
Primary Membrane (Tensile)	Sm	[ ]	[--]	[ ]
Primary Membrane + Bending	1.5 Sm	[ ]	[ ]	[ ]
Primary Membrane + Bending + Local	1.5 Sm	[ ]	[ ]	[ ]
Primary Membrane + Bending + Local + Secondary	3.0 Sm	[ ]	[ ]	[ ]

NOTE: The minimum unirradiated hoop yield strength of the cladding at 650°F used is [ ].

5.1.2 Cladding Strain

Design Criterion:

The Advanced Mark-BW fuel rod transient strain limit is 1% for Conditions I and II events per Reference 3.

The Advanced Mark-BW fuel rod was analyzed to determine the maximum transient the fuel rod cladding could experience before exceeding the transient strain limit of 1%. The transient strain limit analysis uses cladding circumferential changes before and after a linear heat rate (LHR) transient to determine the strain. The analysis was conducted using the NRC-approved TACO3 fuel rod thermal analysis code per Reference 10. The formula for determining the transient strain is:

$$\varepsilon_{transient} = \frac{(\text{Pellet O.D.})_{transient} - (\text{Pellet O.D.})_o}{(\text{Pellet O.D.})_o} \times 100\% \leq 1.00\%$$

The calculated LHRs for transients that induce 1% cladding strain are not limiting to the plant's operation and are much greater than the maximum transient the fuel rod is expected to experience.

5.1.3 Cladding Fatigue

Design Criterion:

The maximum fuel rod fatigue usage factor is 0.9.

The fuel rod was analyzed for the total fatigue usage factor using the approved methodology of Reference 3 and the procedures outlined in the ASME Code. Testing has been conducted by Framatome ANP in France to determine the fatigue performance of M5 cladding. These tests have shown similar fatigue endurance performance for RXA claddings as compared to Zircaloy-4, with the lower yield strength of the RXA claddings limiting the applied stresses. The values for ε E vs. N cycles (Salt vs. N) obtained are well enveloped by the standard O'Donnell-Langer design fatigue curve for irradiated zircaloy. A fuel rod life of 8 years and a vessel life of 40 years are assumed. The fuel rod cladding will, therefore, experience 20% of the number of transients the reactor pressure vessel will experience. All possible Conditions I and II events expected and one Condition III event were analyzed to determine the total fatigue usage factor experienced by the fuel rod cladding. Conservative inputs in terms of cladding thickness, oxide layer buildup, external pressure, internal fuel rod pressure, and differential temperature across the cladding were assumed.

The results of the example fatigue analysis for the Advanced Mark-BW fuel rod show a maximum fatigue usage factor of [ ], which is well within the limit of 0.9.

5.1.4 Fretting

Design Criterion:

Span average cross-flow velocities shall be less than 2 ft/sec.

Mixed-core analyses with a single Advanced Mark-BW and the remaining core with resident fuel demonstrated span average cross-flows less than the 2 ft/sec (span average) criterion, documented in Reference 2. Resident fuel included those with and without MSMGs. The criterion is used to preclude unacceptable FIV of the fuel rods. Span average values are used to consider the integrated effects over the total span. FIV models benchmarked to flow test results demonstrated that the fuel rod and fuel assembly vibration amplitudes are small [( )] for a maximum bundle design span average cross-flow velocity of 2 ft/sec.

Design Criterion:

> The fuel assembly design shall be shown to provide sufficient support to limit fuel rod vibration and clad fretting wear.

The Advanced Mark-BW fuel rod fretting wear performance is based on the proven performance of the standard Mark-BW, the successful three-cycle operation of the LTAs in North Unit 1; out-of-core life and wear and FIV testing; and analytical benchmarks and evaluations.

The standard Mark-BW fuel utilizing Zircaloy-4 fuel rods has exhibited excellent performance with only five failures in over [ ] rods since 1993 and [ ] fuel rod failure since 1998. None of these rod failures was attributed to fretting. The Advanced Mark-BW and standard Mark-BW use many of the same component designs, including the end grid, intermediate grid, grid restraint, top and bottom nozzles, and guide thimbles. Note that Mark-BW fuel assemblies, utilizing M5 fuel rods and guide thimbles, are in the first cycle of operation at Sequoyah Unit 2. Outside the United States, Framatome has also [ ] fuel assemblies with M5 fuel rod and guide thimbles in operation, [ ] of which have M5 grids. These assemblies include the Alliance™* and AFA-3G 17x17 fuel types. In addition, [ ] fuel assemblies with [ ] M5 fuel rods have operated in [ ] reactors, including designs ranging from the 14x14 to the 18x18 fuel types. No fuel rod failures have occurred with the M5 fuel.

As discussed in Section 4.0, four Mark-BW/X1 LTAs were inserted in the core of Dominion Generation's North Anna Unit 1 in 1997. The LTAs successfully completed three cycles of operation with leaker-free performance with a peak pin burnup of ~57 GWd/MTU. The LTAs operated for two cycles in near-peak core conditions and for the third cycle on the core periphery with no failures. The core periphery is known to create a hostile hydraulic environment. Note that the Mark-BW/X1 LTAs used RXA Zircaloy-4 intermediate- and MSMGs.

Extensive out-of-core testing, including life and wear and FIV testing, was conducted. The life and wear test included a 1000-hour endurance test in an environment representative of in-reactor conditions. Life and wear testing showed low fuel rod wear [ ] that was comparable to other proven fuel designs, including the standard Mark-BW. Note that the

---

* Alliance is a trademark of Framatome, ANP.

prototypes tested were fabricated with Zircaloy-4 grids. [

].

The FIV testing served to characterize the flow-induced behavior of the Advanced Mark-BW (MSMG) fuel assembly adjacent to a Mark-BW (non-MSMG) fuel assembly for flow rates encompassing and exceeding reactor startup to normal operating conditions. The testing showed no deleterious cross-flow or axial-flow effects due to the MSMGs. Vibration amplitudes for the fuel assemblies were low, which measured [ ] microns RMS [ ] over a 1 to 50 Hz frequency range. No abnormal flow rate dependencies were observed for the fuel assembly vibration amplitudes.

Therefore, the Advanced Mark-BW fuel rod fretting wear performance was determined to be acceptable based on relevant in-core experience, extensive out-of-core testing, and detailed analysis.

5.1.5 Oxidation, Hydriding, and Crud Buildup

Design Criterion:

> The fuel rod cladding best-estimate corrosion shall not exceed 100 microns, per Reference 11. Hydrogen pickup is controlled by the corrosion limit.

Corrosion data of M5 fuel rod cladding are provided in Reference 3. The data confirm that M5 fuel rod cladding exhibits a strong resistance to corrosion. From previous irradiation experience with this cladding type, the corrosion has been found to be less than one half the corrosion of low-tin zircaloy claddings. For the present application, a corrosion prediction based on the present database of M5 corrosion measurements for typically enveloping fuel cycles shows that the maximum predicted cladding corrosion for the M5 claddings will be [ ] μm versus a limit of 100 μm. The hydrogen pick-up rate of the M5 cladding has been found to be approximately [ ].

At this corrosion level, the maximum hydrogen content of the M5 cladding at 65 GWd/MTU is approximately [ ] ppm. The upper limit for hydrogen pick-up is [ ] ppm. This level of

corrosion and associated hydriding will not adversely affect the structural integrity of the fuel rod during its design lifetime.

5.1.6 Fuel Rod Bow

Fuel rod bowing is evaluated with respect to the mechanical and thermal-hydraulic performance of the fuel assembly. There is no specific design criterion for fuel rod bow.

PIEs of the Advanced Mark-BW/X1 LTAs are planned in early 2002 to confirm the fuel rod bow characteristics of the assembly. Advanced Mark-BW fuel rod bow, however, is not expected to differ significantly from that of the standard Mark-BW fuel.

As discussed in Reference 2, the Mark-BW Zircaloy-4 fuel design has features that make its fuel rod bow performance similar to that of other Framatome ANP fuel designs. In Reference 4, Framatome ANP presented new data that extended the rod bow database for Framatome ANP fuel (zircaloy) to [ ] GWd/MTU. The topical report concluded that the rod bow correlations from Reference 12 are applicable at extended burnups and apply to the Mark-BW.

The low growth characteristics of the M5 advanced material that is used on the Advanced Mark-BW will provide bow behavior no more severe than the zircaloy clad fuel in the Mark-BW cage. The low growth of M5 has been demonstrated through the irradiation experience of the Mark-BW/X1 LTAs, in addition to special clad assemblies in the McGuire plant and other Framatome ANP fuel in Europe. Thus, the Advanced Mark-BW will have no greater penalty for rod bow than is assessed against the Mark-BW Zircaloy-4 design.

5.1.7 Axial Growth

Design Criterion:

> The fuel assembly-to-reactor internals gap allowance shall be designed to provide positive clearance during the assembly lifetime (Reference 2).

The axial gap between the top nozzle and reactor upper core plate was conservatively analyzed to show that sufficient margin exists to accommodate the fuel assembly growth for the design burnup. The peak rod burnup for the Advanced Mark-BW design is 62,000 MWd/MTU. The analysis was conducted using the latest irradiation growth models for Alloy M5 guide thimbles

and fuel rods based on PIE data for the Framatome ANP fuel designs. These growth models were approved in Reference 3.

The minimum fuel assembly/reactor core plate gap at EOL for a 60,000 MWd/MTU maximum assembly burnup was determined to be [ ] inch at worst-case (cold) conditions. A conservative maximum fuel assembly growth prediction was used given the low fuel assembly growth.

Design Criterion:

> The fuel assembly top nozzle-to-fuel rod gap allowance shall be designed to provide positive clearance during the assembly lifetime.

The axial gaps between the top nozzle adapter plate and fuel rods were conservatively analyzed to show that sufficient margin exists to accommodate the fuel assembly and fuel rod growth for the design burnup. The peak rod burnup for the Advanced Mark-BW design is 62,000 MWd/MTU. The analysis was conducted using the NRC-approved irradiation growth models for Alloy M5 guide thimbles and fuel rods based on PIE data for the Framatome ANP fuel designs.

The minimum fuel rod shoulder gap at EOL for the analyzed peak fuel rod burnup of 65,000 MWd/MTU was calculated to be [ ] inch at worst-case (hot) conditions using highly conservative methods. For the fuel rod growth evaluations, worst case was considered to be maximum fuel rod growth and minimum (no) guide thimble growth. Differential thermal expansion was also considered at operating temperatures.

5.1.8 Fuel Rod Internal Pressure

Design Criterion:

> Fuel rod internal pressure limits are established in Reference 13. The design basis is that the fuel system will not be damaged due to excessive internal pressure. Fuel rod internal pressure is limited to that which would cause 1) the diametral gap to increase due to outward creep during steady-state operation and 2) extensive DNB propagation to occur.

The Advanced Mark-BW fuel rod internal gas pressure was determined using the TACO3 computer code per Reference 10 and the methodology defined in Reference 13.

The results indicated the fuel rod can attain the design maximum burnup of 62 GWd/MTU. Inputs to the analysis included a power history that was assumed to envelop the operation of any individual fuel rod and worst-case manufacturing variations allowed by the fuel rod specifications. On a cycle-specific basis, should peak pin powers violate the envelope resulting in predicted pressure greater than the licensed limit, acceptable pin pressure results can be demonstrated by utilizing fuel rod-specific power histories and fuel assembly as-built manufacturing data. In addition, other NRC-approved fuel performance codes, such as COPERNIC (per Reference 14) may be utilized in the future for the Advanced Mark-BW fuel rod evaluation.

5.1.9 Assembly Liftoff

Design Criteria:

> The Advanced Mark-BW fuel holddown springs must be capable of maintaining fuel assembly contact with the lower support plate during normal operating, Conditions I and II events, except for the pump overspeed transient. The fuel assembly shall not compress the holddown spring to solid height for any Conditions I and II event. The fuel assembly top and bottom nozzles shall maintain engagement with reactor internals for all Conditions I through IV events (Reference 2).

The Advanced Mark-BW holddown springs were analyzed to show that the holddown springs can accommodate irradiation growth of the fuel assembly and the differential thermal expansion between the fuel assembly and the core internals. The fuel assembly lift evaluation was performed by comparing the holddown force provided by the leaf springs with that of the hydraulic forces at both normal operating conditions and pump overspeed condition. The hydraulic forces were determined using the NRC approved LYNXT code per Reference 15, which established the pressure drop characteristics of the Advanced Mark-BW fuel assembly for full core and mixed core implementation with resident fuel.

The analysis showed that the Advanced Mark-BW fuel assembly will not lift off under any normal operating condition. The minimum margin-to-fuel assembly liftoff occurs at EOL, 85°F. At the pump overspeed condition, the fuel assembly will experience some liftoff. The liftoff will

be minimal, and the holddown spring deflection will be less than the worst-case normal operating cold-shutdown condition. The holddown spring does not go solid for any operating condition. These margins are calculated assuming the full Advanced Mark-BW core, which bounds the mixed core configurations with resident fuel without MSMGs. In addition, the fuel assembly top and bottom nozzles were shown to maintain engagement with reactor internals for all operating conditions.

5.2 *Fuel Rod Failure Criteria*

5.2.1 Internal Hydriding

Design Criterion:

> Internal hydriding shall be precluded by appropriate manufacturing controls.

The absorption of hydrogen by the cladding can result in cladding failure due to reduced ductility and the formation of hydride platelets. This failure mechanism is precluded in all Framatome ANP fuel rods by tight controls in the moisture hydrogen impurities in the rod during fabrication. Cleaning and drying of the cladding, and careful moisture control of the fuel pellets are used to minimize the total hydrogen within the fuel rod assemblies. The Framatome fabrication limit for total hydrogen in the fuel pellets is [ ] ppm.

5.2.2 Cladding Collapse

Design Criterion:

> The acceptance criterion is that the predicted creep collapse life of the fuel rod must exceed the maximum expected in-core life.

The Advanced Mark-BW fuel rod was analyzed for creep collapse using NRC-approved methods outlined in Reference 16. The following conservatisms were used in determining creep collapse life of the fuel rod:

[

]

Fuel rod creep collapse is determined when either of the following happens:

- The rate of creep ovalization exceeds 0.1 mils/hr.
- The maximum fiber stress exceeds the unirradiated yield strength of the cladding.

RXA claddings such as M5 have a greater resistance to creep than the stress-relieved Zircaloy-4 cladding. The creep rate of M5 is approximately [ ] of the creep rate of Zircaloy-4. A factor of [ ] is used on the creep model contained in CROV to model the M5 claddings.

Using the methodology described above, the fuel rod creep collapse lifetime was shown to be greater than the design burn-up of 62 GWd/MTU.

5.2.3 Overheating of Cladding

Design Criterion:

> For a 95% probability at a 95% confidence level, DNB will not occur on a fuel rod during normal operation and anticipated operational occurrence (AOOs).

The requirements related to overheating and cladding are addressed in plant-specific transient analyses. NRC-approved methods are used to perform the transient analyses.

DNB Correlation

The family of BWU critical heat flux (CHF) correlations is utilized for the DNB analysis of the Advanced Mark-BW fuel assembly. The BWU family of CHF correlations consists of three correlations that use the same basic equation form but are fit to different databases: BWU-N is applicable to non-mixing vane grids, BWU-I is the basic mixing vane correlation, and BWU-Z is the enhanced mixing vane correlation approved for the Advanced Mark-BW fuel assembly design. The BWU-N and BWU-Z CHF correlations are used as the licensing basis for the Advanced Mark-BW fuel assembly.

BWU-N CHF Correlation

The applicable CHF correlation for DNB analysis of the Advanced Mark-BW fuel assembly in the non-mixing region of the fuel assembly is the BWU-N CHF correlation documented in Reference 5. The non-mixing region of the fuel assembly extends from the beginning of the heated length to the leading edge of the first mixing vane grid.

BWU-Z CHF Correlation

The applicable CHF correlation for analysis of the Advanced Mark-BW fuel assembly in the mixing region, but below the MSMGs, is BWU-Z. The BWU-Z correlation is also used above the MSMGs, with an enhancement factor. The database for the BWU-Z correlation extends its range of application with improved margin in the annular (middle) and low-flow regimes at low pressure, mass velocity, and high quality compared to the previous NRC-approved CHF correlation BWCMV-A (Reference 6) used for the Mark-BW. Similar to the BWCMV-A correlation, BWU-Z uses a design-specific equivalent grid-spacing factor.

Higher CHF performance, beyond the Advanced Mark-BW mixing vane grid, is obtained by the addition of the three MSMGs. This additional performance, demonstrated at [ ]% in CHF, is incorporated into the BWU-Z CHF correlation by means of a direct CHF multiplication factor. An addendum to the BWU-Z CHF topical report (Reference 7) has been submitted to the NRC for application of the enhanced CHF performance of the MSMGs using the [ ]% enhancement factor applied to the BWU-Z CHF correlation. When using the BWU-Z correlation in this manner, referenced specifically in Reference 7, it is referred to as BWU-ZM.

5.2.4 Overheating of Fuel Pellets

Design Criterion:

> For a 95% probability at a 95% confidence level, fuel pellet centerline melting shall not occur for normal operation and AOOs.

The design basis for Advanced Mark-BW fuel rod centerline melt follows that given in Reference 2. Fuel melting is not permitted during normal operating conditions or during AOOs. The TACO3 computer code was used to determine the local LHR throughout the fuel rod lifetime that results in centerline temperature predictions exceeding T_L, which is a limit value

chosen such that a 95% probability exists at the 95% confidence level that centerline melting will not occur. The most limiting time in life for the local LHR is at BOL. A typical generic centerline fuel melt limit is [ ] kW/ft for the Advanced Mark-BW fuel rod.

5.2.5 Pellet/Cladding Interaction

Per Section 4.2 of the SRP, there are no generally applicable criteria for pellet-clad interaction failure. Clad strain and fuel melt criteria are used to ensure that the fuel rod design is acceptable.

5.2.6 Cladding Rupture

The requirements of cladding rupture are addressed in the plant-specific loss-of-coolant accident (LOCA) analyses. NRC-approved methods are used to perform the LOCA analyses.

5.3 *Fuel Coolability*

5.3.1 Cladding Embrittlement

The requirements on cladding embrittlement are addressed in the plant-specific LOCA analyses. NRC-approved methods are used to perform the LOCA analyses.

5.3.2 Violent Expulsion of Fuel

The requirements on violent expulsion of fuel during a reactivity accident are addressed in the plant-specific safety analyses. NRC-approved methods are used to evaluate the event (control rod ejection).

5.3.3 Fuel Rod Ballooning

The requirements on fuel rod ballooning are addressed in the plant-specific LOCA analyses. NRC-approved methods are used to perform the LOCA analyses.

5.3.4 Fuel Assembly Structural Damage from External Forces

Design Criteria:

- **OBE** - Allow continued safe operation of the fuel assembly following an OBE event by ensuring the fuel assembly components do not violate their dimensional requirements.
- **Safe Shutdown Earthquake (SSE)** - Ensure safe shutdown of the reactor by maintaining the overall structural integrity of the fuel assemblies, control

rod insertibility, and a coolable geometry within the deformation limits consistent with the Emergency Core Cooling System (ECCS) and safety analysis.

- **LOCA or SSE+LOCA** - Ensure safe shutdown of the reactor by maintaining the overall structural integrity of the fuel assemblies and a coolable geometry within deformation limits consistent with the ECCS and safety analysis.

The Advanced Mark-BW faulted evaluation addresses both the horizontal (LOCA and seismic) and vertical (LOCA) effects. The horizontal faulted analysis models and methodology are consistent with that approved by the NRC in Reference 9. The axial faulted analysis methodology is consistent with that approved by the NRC in Reference 8.

The design bases used to establish the acceptance criteria for the Advanced Mark-BW fuel assembly are provided in Reference 2 and are consistent with NUREG-0800, Section 4.2, Appendix A (Reference 1) and follow the guidelines established by Section III of the ASME Code.

5.3.4.1 Horizontal Analysis

The Advanced Mark-BW fuel assembly component stresses were shown to be less than the allowable limits based on ASME Code, Section III criteria or testing.

The horizontal component of the faulted analysis determines the structural integrity of the Advanced Mark-BW fuel assembly in the horizontal direction. The following loading conditions were evaluated:

- OBE
- SSE
- LOCA
- Combined Seismic and LOCA Events

Advanced Mark-BW fuel assembly models were benchmarked using properties established through testing. A representation of resident fuel assembly properties was also used in the analysis for the mixed core evaluation. Fuel assembly models were combined to represent a row of configuration in the core. Row models with 3 to 15 assemblies were created.

Typical seismic SSE displacement time histories at the lower core plate, upper core plate, and upper end of the baffle plate were evaluated. The LOCA lateral displacements evaluated

corresponded to a worst-case attached pipe break based on leak-before-break. The SSE and LOCA time histories were applied to the reactor core model. The fuel assembly response was determined per methodology described in Reference 9. The maximum grid impact forces and grid deformations were obtained for SSE and SSE+LOCA conditions for a full-core Advanced Mark-BW fuel assembly configuration.

A mixed core bounding analysis of both resident and Advanced Mark-BW fuel assemblies was also performed for seismic and LOCA events. The analysis was performed to show the adequacy of the Advanced Mark-BW when next to resident fuel. Three possible mixed-core configurations were selected to account for the potential core locations where the Advanced Mark-BW may be loaded. These core patterns are shown in Figure 5.1, Figure 5.2, and Figure 5.3.

The maximum grid impact forces for each of the load cases occurred at the peripheral fuel assembly locations adjacent to the baffle for all core configurations.

The maximum impact load on the spacer grids under seismic SSE conditions was determined to be [ ] lbs for the example case. The shortest row configuration produced the largest impact load. The maximum impact force for both SSE and LOCA occurred at an intermediate grid location of a peripheral fuel assembly. The loads for seismic and LOCA were combined, resulting in the following grid deformation:

SSE + LOCA	
Advanced Mark-BW Grids	
Intermediate Spacer Grid	Maximum FA accumulated deformation in a row = [ ] in
MSMG	Maximum FA accumulated deformation in a row = [ ] in
Resident Fuel	
Intermediate Spacer Grid	Maximum FA accumulated deformation in a row = [ ] in

The spacer grid impact loads for the SSE conditions were within the allowable elastic load limits. The fuel assembly accumulated deformations under SSE+LOCA conditions were evaluated for core coolable geometry and found to be acceptable. The core coolable geometry will be maintained for all the faulted loads.

5.3.4.2 Vertical Analysis

The Advanced Mark-BW fuel assembly was evaluated for the vertical LOCA condition per the approved methodology in Reference 8. Fuel assembly axial properties obtained from testing were used to benchmark the fuel assembly axial model.

The example vertical core force time histories that were used corresponded to bounding attached pipe breaks based on leak-before-break methodology. The guide thimble critical buckling is the limiting criterion for the vertical LOCA condition. For conservatism, a load factor of 1.2 was used on the guide thimble load to account for unequal loading due to external factors, fabrication differences, and inherent design factors. The analysis confirmed that the forces on the guide thimble were well below conservatively calculated allowable loads.

5.3.4.3 Combined Horizontal and Vertical Faulted Analysis

The Advanced Mark-BW fuel components were shown to satisfy all design criteria for faulted loading conditions. The Advanced Mark-BW fuel assembly component stress analyses for faulted conditions were performed using axial and lateral loads generated by seismic and LOCA loading analyses. SSE and SSE+LOCA loading were used for the component analyses. The loads for the worst-case LOCA break were conservatively combined with those of the SSE to determine maximum fuel assembly loads. The component stress intensity limits for the components were based on the Level D service limit of the Section III of the ASME Code (Reference 17).

The design margins indicate that all major components of the Advanced Mark-BW fuel assembly meet the design criteria for the SSE and SSE+LOCA loading events.

5.4 *Design Evaluation Summary*

The Advanced Mark-BW fuel assembly was shown to meet all fuel assembly design criteria critical to safe and reliable operation. The standard Mark-BW features maintained in the Advanced Mark-BW assembly provide reactor-proven design parameters that provide a basis for successful future performance. Design verification testing and analyses have demonstrated the acceptability of the added design features and ensure that the Advanced Mark-BW fuel assembly will operate safely and reliably. A detailed LTA program has further verified the Advanced Mark-BW irradiation performance.

Acceptable Advanced Mark-BW fuel assembly and fuel rod mechanical and thermal-hydraulic performance capability can be obtained for fuel rod burnups up to 62,000 MWd/MTU.

Table 5.1 Summary of Reactor Coolant System Design Transients

	Event Description	Anticipated Life-Time Occurrences
Normal Conditions		
1.	Heatup and cooldown at 100°F/hr	200 (each)
2.	Unit loading and unloading at 5% of full power/min	18,300 (each)
3.	Step load increase and decrease of 10% of full power	2,000 (each)
4.	Large step load decrease	200
5.	Steady-state fluctuations	Infinite
Upset Conditions		
6.	Loss of load, without immediate turbine or reactor trip	80
7.	Loss of power (blackout with natural circulation in the reactor coolant system)	40
8.	Loss of flow (partial loss of flow, one pump only)	80
9.	Reactor trip from full power	400
10.	Spray actuation with a differential temperature > 320°F ≤ 560°F	10
11.	Operational Basis Earthquake Reactor Vessel	200 cycles

In accordance with the ASME Nuclear Power Plant Component Code, faulted conditions are not included in the fatigue evaluation.

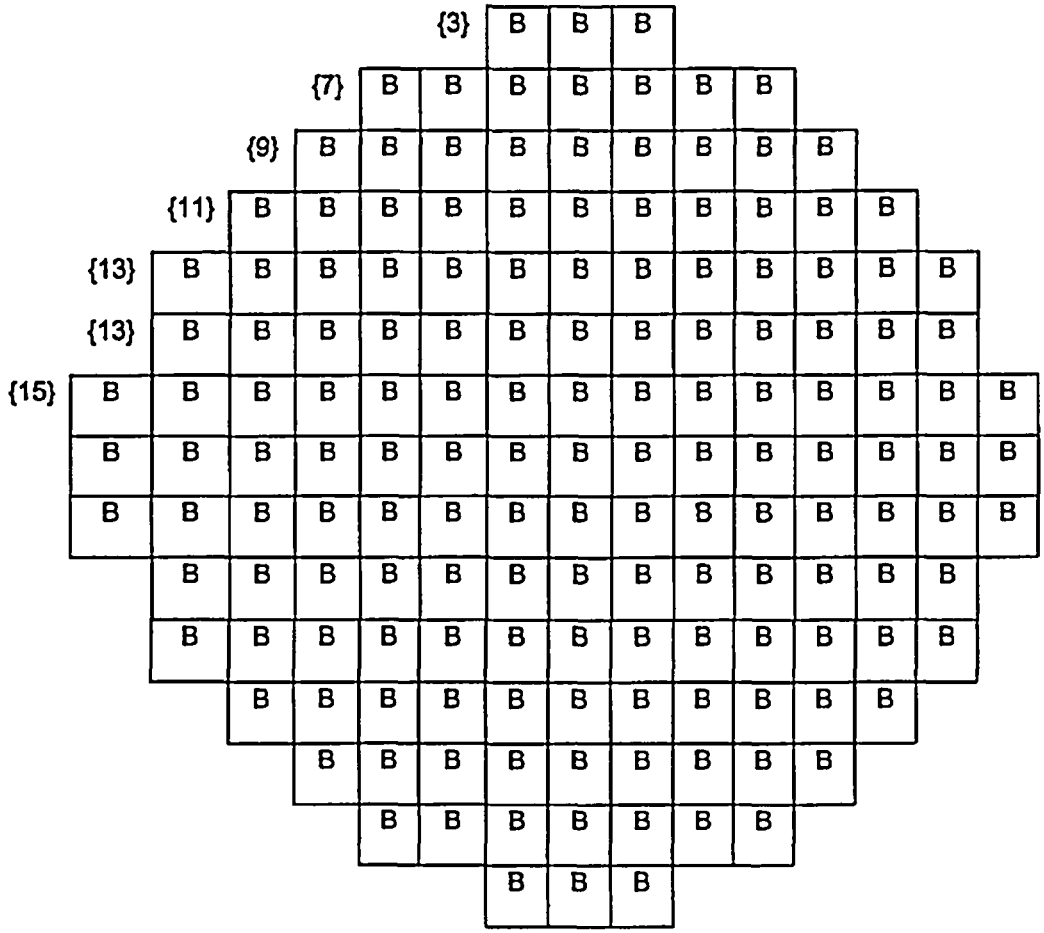

NOTES

B Locations of permanent grid deformation from LOCA.

{#} Actual run cases.

N = 26 Number of unique location for 1/8 core symmetry.

Figure 5.1 Core Loading – All Advanced Mark-BW Fuel Configuration Structural Analysis

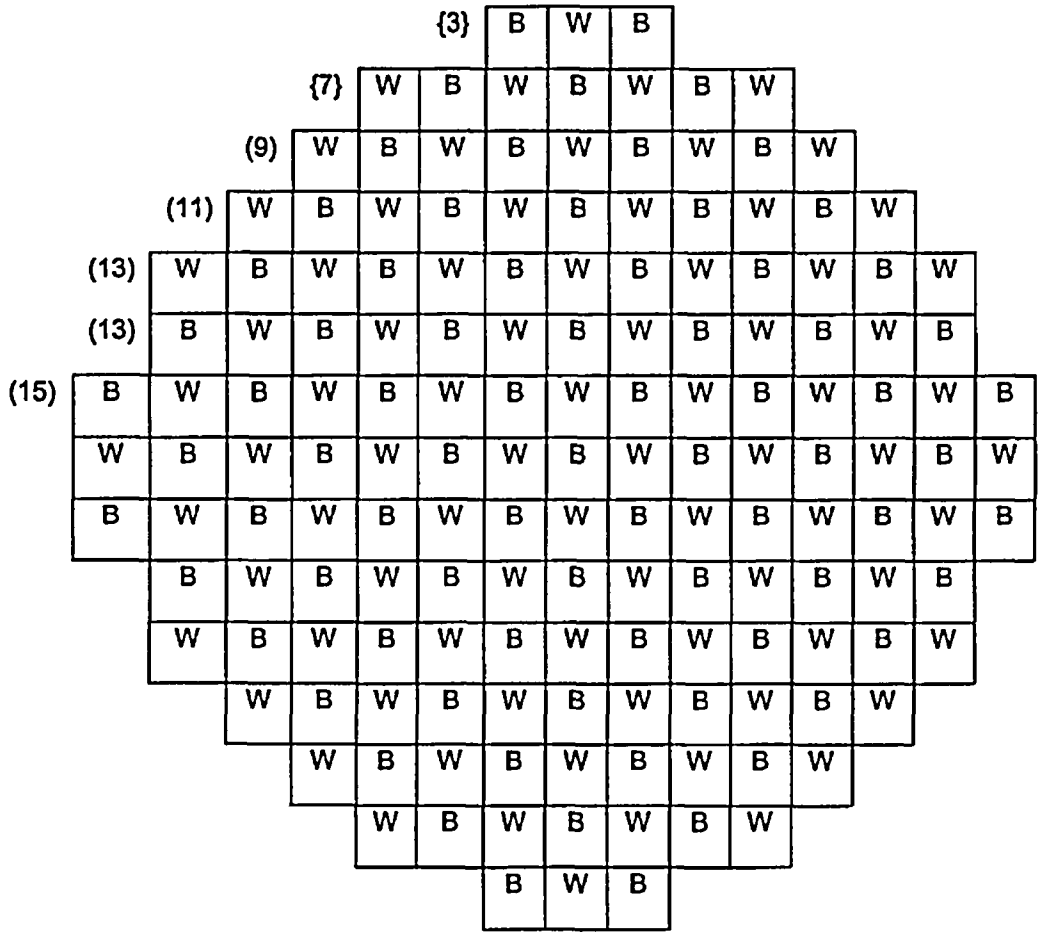

NOTES

B	Locations of permanent grid deformation from LOCA.

One Mixed Core Configuration, 77 Advanced Mark-BW and 80 Westinghouse fuel assemblies in the core.

{#} Actual run cases.

(#) Number of fuel assemblies in a row.

Figure 5.2 Core Loading – Mixed Core Configuration Number 1 - Structural Analysis

						{3}	W	B	W						
					{7}	B	W	B	W	B	W	B			
				(9)	B	W	B	W	B	W	B	W	B		
			(11)	B	W	B	W	B	W	B	W	B	W	B	
		(13)	B	W	B	W	B	W	B	W	B	W	B	W	B
		(13)	W	B	W	B	W	B	W	B	W	B	W	B	W
	(15)	W	B	W	B	W	B	W	B	W	B	W	B	W	B	W
		B	W	B	W	B	W	B	W	B	W	B	W	B	W	B
		W	B	W	B	W	B	W	B	W	B	W	B	W	B	W
			W	B	W	B	W	B	W	B	W	B	W	B	W	
			B	W	B	W	B	W	B	W	B	W	B	W	B	
				B	W	B	W	B	W	B	W	B				
					B	W	B	W	B	W	B					
						B	W	B	W	B						
							W	B	W							

NOTES

B Locations of permanent grid deformation from LOCA.

Second Mixed Core Configuration, 80 Advanced Mark-BW and 77 Westinghouse fuel assemblies in the core.

{#} Actual run cases.

(#) Number of fuel assemblies in a row.

Figure 5.3 Core Loading – Mixed Core Configuration Number 2 - Structural Analysis

6.0 References

1. *Standard Review Plan*, Section 4.2, NUREG-0800 Revision 2, U.S. Nuclear Regulatory Commission, July 1981.

2. BAW-10172P, *Mark-BW Mechanical Design Report*, July 1988.

3. BAW-10227P-A, *Evaluation of Advanced Cladding and Structural Material (M5) in PWR Reactor Fuel*, February 2000.

4. BAW-10186P Revision 1 Supplement 1, *Mark-BW Extended Burnup*, November 2001.

5. BAW-10199P-A, *The BWU Critical Heat Flux Correlations*, December 1994.

6. BAW-10189P-A, *CHF Testing and Analysis of the Mark-BW Fuel Assembly Design*, January 1996.

7. BAW-10199P-A Addendum 2, *Application of the BWU-Z CHF Correlation to the Mark-BW17 Fuel Design with Mid-Span Mixing Grids*, November 2000.

8. BAW-10133P-A, *Mark-C Fuel Assembly LOCA-Seismic Analysis*, June 1986.

9. BAW-10133P-A Revision 1 Addendum 1, *Mark-C Fuel Assembly LOCA-Seismic Analyses*, October 2000.

10. BAW-10162P-A, *TACO3 Fuel Pin Analysis Computer Code*, October 1989.

11. BAW-10186P-A, *Extended Burnup Evaluation*, June 1997.

12. BAW-10147P-A Revision 1, *Fuel Rod Bowing in Babcock & Wilcox Fuel Designs*, May 1983.

13. BAW-10183P-A, *Fuel Rod Gas Pressure Criterion (FRGPC)*, July 1995.

14. BAW-10231P, *COPERNIC Fuel Rod Design Computer Code*, September 1999.

15. BAW-10156P-A Revision 1, *LYNXT: Core Transient Thermal-Hydraulic Program*, August 1993.

16. BAW-10084P-A, *Program to Determine In-Reactor Performance of BWFC Fuel Cladding Creep Collapse*, July 1995.

17. American Society of Mechanical Engineers, *Boiler and Pressure Vessel Code*, Section III, Nuclear Power Plant Components, 1992 Edition.